SONY

HD DIGITAL VIDEOCASSETTE RECORDER

HDW-2000
HDW-D2000
HDW-M2000/M2000P
HDW-S2000/S2000P

HD DIGITAL VIDEOCASSETTE PLAYER

HDW-A2100
HDW-M2100/M2100P

DIGITAL VIDEOCASSETTE RECORDER

DVW-2000/2000P
DVW-M2000/M2000P
MSW-2000
MSW-A2000/A2000P
MSW-M2000/M2000P
MSW-M2000E/M2000EP

DIGITAL VIDEOCASSETTE PLAYER

MSW-M2100/M2100P
MSW-M2100E/M2100EP

CONTROL PANEL UNIT
HKDW-101
BKDW-101
BKMW-101

SDTI INTERFACE BOARD
HKDW-102

HD UPCONVERTER BOARD
BKMW-104

NETWORK INTERFACE BOARD
BKMW-E2000
BKMW-E3000

HDCAM

Digital BETACAM™

MPEG IMX

Tele-File

MEMORY STICK

CINEALTA

MAINTENANCE MANUAL

Volume 2 2nd Edition (Revised 4)

⚠警告

このマニュアルは，サービス専用です。
お客様が，このマニュアルに記載された設置や保守，点検，修理などを行うと感電や火災，人身事故につながることがあります。
危険をさけるため，サービストレーニングを受けた技術者のみご使用ください。

設置や保守，点検，修理などを行う前に，別冊のメンテナンスマニュアルVolume 1，インストレーションマニュアル，オペレーションマニュアルのそれぞれの「安全のために」を必ずお読みください。

⚠WARNING

This manual is intended for qualified service personnel only.
To reduce the risk of electric shock, fire or injury, do not perform any servicing other than that contained in the operating instructions unless you are qualified to do so. Refer all servicing to qualified service personnel.

⚠WARNUNG

Die Anleitung ist nur für qualifiziertes Fachpersonal bestimmt.
Alle Wartungsarbeiten dürfen nur von qualifiziertem Fachpersonal ausgeführt werden. Um die Gefahr eines elektrischen Schlages, Feuergefahr und Verletzungen zu vermeiden, sind bei Wartungsarbeiten strikt die Angaben in der Anleitung zu befolgen. Andere als die angegeben Wartungsarbeiten dürfen nur von Personen ausgeführt werden, die eine spezielle Befähigung dazu besitzen.

⚠AVERTISSEMENT

Ce manual est destiné uniquement aux personnes compétentes en charge de l'entretien. Afin de réduire les risques de décharge électrique, d'incendie ou de blessure n'effectuer que les réparations indiquées dans le mode d'emploi à moins d'être qualifié pour en effectuer d'autres. Pour toute réparation faire appel à une personne compétente uniquement.

HDW-2000 (SY)	Serial No. 15001 and higher	MSW-A2000 (SY)	Serial No. 15001 and higher
HDW-2000 (J)	Serial No. 35001 and higher	MSW-A2000 (J)	Serial No. 35001 and higher
HDW-A2100 (J)	Serial No. 35001 and higher	MSW-M2000 (SY)	Serial No. 15001 and higher
HDW-D2000 (SY)	Serial No. 16001 and higher	MSW-M2000 (J)	Serial No. 35001 and higher
HDW-M2000 (SY)	Serial No. 15001 and higher	MSW-M2000E (SY)	Serial No. 10001 and higher
HDW-M2000 (J)	Serial No. 35001 and higher	MSW-M2000E (J)	Serial No. 30001 and higher
HDW-S2000 (SY)	Serial No. 16001 and higher	MSW-M2100 (SY)	Serial No. 15001 and higher
HDW-S2000 (J)	Serial No. 36001 and higher	MSW-M2100 (J)	Serial No. 35001 and higher
HDW-M2100 (SY)	Serial No. 15001 and higher	MSW-M2100E (SY)	Serial No. 10001 and higher
HDW-M2100 (J)	Serial No. 35001 and higher	MSW-M2100E (J)	Serial No. 30001 and higher
HDW-M2000P (SY)	Serial No. 45001 and higher	MSW-A2000P (SY)	Serial No. 45001 and higher
HDW-S2000P (SY)	Serial No. 46001 and higher	MSW-A2000P (CN)	Serial No. 70001 and higher
HDW-M2100P (SY)	Serial No. 45001 and higher	MSW-M2000P (SY)	Serial No. 45001 and higher
DVW-2000 (SY)	Serial No. 10001 and higher	MSW-M2000P (CN)	Serial No. 70001 and higher
DVW-M2000 (SY)	Serial No. 10001 and higher	MSW-M2000EP (SY)	Serial No. 40001 and higher
DVW-2000P (SY)	Serial No. 40001 and higher	MSW-M2000EP (CN)	Serial No. 70001 and higher
DVW-M2000P (SY)	Serial No. 40001 and higher	MSW-M2100P (SY)	Serial No. 45001 and higher
MSW-2000 (SY)	Serial No. 10001 and higher	MSW-M2100P (CN)	Serial No. 70001 and higher
MSW-2000 (CN)	Serial No. 70001 and higher	MSW-M2100EP (SY)	Serial No. 40001 and higher
		MSW-M2100EP (CN)	Serial No. 70001 and higher

目次 / Table of Contents

このマニュアルについて

本書の目的 ..... 5 (J)
関連マニュアル ..... 5 (J)
構成 ..... 6 (J)

Manual Structure

Purpose of this manual ..... 5 (E)
Related manuals ..... 5 (E)
Contents ..... 6 (E)

1. Spare Parts

1-1. 補修部品注意事項 1-1
1-1. Notes on Repair Parts 1-1
1-2. Exploded Views 1-3
1-3. Electrical Parts List 1-42
1-3-1. Frame List 1-42
1-3-2. Cables and Harnesses 1-42
1-3-3. External Connectors 1-45
1-3-4. Each Board 1-46
1-3-5. Power Supply Unit 1-618
1-4. Supplied Accessories 1-619
1-5. Power Cords for SY Model 1-621
1-6. Optional Fixtures 1-621

2. Semiconductor Pin Assignments

3. Circuit Description and Block Diagrams

回路概説 ..... 3-1 (J)
Circuit Description ..... 3-1 (E)
Block Diagram Index 3-24
Overall (For HDW Series, HKDW-102) 3-26
Overall (For DVW Series, BKMW-104) 3-30
Overall (For MSW Series, BKMW-104, BKMW-E2000/E3000) 3-34
Function Control 3-38
- CP-371 3-38
- DIO-65 3-38
- FP-133 3-38
- FP-134 3-38
- HP-101 3-38
- LED-357 3-38
- SE-606/606A 3-38
- SW-1106 3-38
- SWC-40 3-38

AE-31 3-40
APR-52 3-42
APR-52A 3-44
AU-272 3-46
CUE-13 3-49
DIF-134 3-50
DM-123 3-52
DPR-155 3-60
DPR-229 3-64
DR-414 3-68
DR-508 3-70
DSP-109 3-73
EPR-1 3-74
EQ-84 3-78
HIF-1 3-80
HPR-1 3-84
SDI-52 3-88
SDI-63 3-89
SS-89 3-90
TC-104 3-93
VN-13 3-94
VPR-64 3-98
VPR-91 3-104

4. Board Layouts

Board Layout Index 4-1
AE-31 4-3
AE-31H 4-5
APR-52 4-6
RC-89H 4-8
AU-272 4-10
CL-29 4-11
CP-351 4-12
CP-350 4-13
CP-371 4-14
CUE-13 4-15
DIF-134 4-16
DIO-65 4-17
SE-606/606A 4-17
DM-123 4-18
DPR-155 4-23
DU-178 4-24
DPR-194 4-26
DPR-195 4-26
DPR-208 4-27
DPR-229 4-29
DR-414 4-32
DR-508 4-34
DSP-109 4-36
DT-47 4-37
EPR-1 4-39
EQ-84 4-42
FP-133 4-45
FP-134 4-46
HIF-1 4-47
HPR-1 4-51
HP-101 4-54
IF-885 4-54
IF-886 4-54
LED-357 4-55
LP-81 4-55
MB-884 4-56
SDI-52 4-58
SS-89 4-61
SW-1106 4-64
SWC-40 4-64

TC-104 4-64
VN-13 4-65
VPR-64 4-68
VPR-91 4-72

このマニュアルについて

本書の目的

本書は下記機種のメンテナンスマニュアルVolume 2です。

HDデジタルビデオカセットレコーダ	HDW-2000/D2000/M2000/S2000
HDデジタルビデオカセットプレーヤ	HDW-A2100/M2100
コントロールパネルユニット	HKDW-101
SDTIインターフェースボード	HKDW-102
デジタルビデオカセットレコーダ	DVW-2000/M2000
コントロールパネルユニット	BKDW-101
デジタルビデオカセットレコーダ	MSW-2000/A2000/M2000/M2000E
デジタルビデオカセットプレーヤ	MSW-M2100/M2100E
コントロールパネルユニット	BKMW-101
HDアップコンバータボード	BKMW-104
ネットワークインターフェースボード	BKMW-E2000/E3000

本機のメンテナンスマニュアル（Volume 1, 2, 3）は，システム／サービスエンジニアの方々にご使用いただくことを想定し，保守に関する情報と部品レベルでのサービスを前提とした情報（部品交換，調整要項，回路図，マウント図，詳細パーツリスト等）を記載しています。

本書(Volume 2)では，詳細パーツリスト，ブロック図，マウント図を記載しています。

関連マニュアル

本機には，この「メンテナンスマニュアル」のほかに，下記のマニュアルが用意されています。

・オペレーションマニュアル（本機またはオプションに付属）
本機を実際に運用および操作するのに必要なマニュアルです。設置時にも必要です。

・インストレーションマニュアル（本機またはオプションに付属）
本機の納入設置時に必要な情報を記載したマニュアルです。

・リモート（9ピン）コネクタプロトコルマニュアル（別途用意）
本機をRS-422A（9ピンシリアルリモート）にて制御するためのプロトコルについて説明したマニュアルです。入手を希望される方は，ソニーの営業窓口にお問い合わせください。

・パラレルI/O（50ピン）コネクタインターフェイスマニュアル（別途用意）
本機をパラレル50ピンにて制御するためのプロトコルについて説明したマニュアルです。入手を希望される方は，ソニーの営業窓口にお問い合わせください。

・“Semiconductor Pin Assignments” CD-ROM版（別途用意）

この“Semiconductor Pin Assignments” CD-ROM版は，本機に使用されている半導体を検索することができます。

このCD-ROMで検索できない半導体は，本機のメンテナンスマニュアルVolume 2に記載されています。メンテナンスマニュアルVolume 2には，その機種に使用されているすべての半導体一覧とそのID番号を記載していますので，このCD-ROM版と合わせて使用してください。

部品番号：9-968-546-XX

構成

メンテナンスマニュアルの構成を把握していただくために，全章の概略を以下に説明します。

メンテナンスマニュアル
Volume 2
(9-967-902-1X)

Section 1　Spare Parts

分解図および機構部品リスト，電気部品リストを記載しています。

Section 2　Semiconductor Pin Assignments

本機で使用している半導体の型名一覧とその半導体標準図検索用ID番号を記載しています。

別売の“Semiconductor Pin Assignments” CD-ROM版と合わせてご覧ください。

また，本書作成時に，CD-ROM版に含まれていない半導体標準図がある場合は，本章に追加掲載しています。

Section 3　Circuit Description and Block Diagrams

回路概説とオーバーオール，各基板のブロック図を記載しています。

Section 4　Board Layouts

基板のマウント図を記載しています。

メンテナンスマニュアル
Volume 1
(9-967-900-1X)

第1章　サービスインフォメーション
本機のサービス時に必要となる情報の基礎的な部分（外装やカセットコンパートメントの取り外し，回路構成，主要部品配置図，治工具／測定器情報，注意事項など），異常発生時の処置／案内，ISRなどについて説明しています。
ISR: Interactive Status Reporting

第2章　エラーメッセージ
エラーメッセージについて説明しています。

第3章　メンテナンスモード
メンテナンスモードの各メニューについて説明しています。

第4章　定期点検および保守
本機で推奨する定期点検情報，各部のクリーニング方法について説明しています。

第5章　主要部品の交換
機構部品，電源ユニット，および基板の交換について説明しています。

第6章　テープ走行系調整
第5章に記載した部品の交換後に行うテープ走行系の調整について説明しています。

第7章　主要部品交換後の電気調整
第5章に記載した部品の交換に伴う電気調整について説明しています。

第8章　電気調整要項
本機のメンテナンスに必要な電気調整について説明しています。

第9章　ビデオヘッド突出量の測定
ビデオヘッド突出量の測定方法について説明しています。

第10章　MPEG IMXフォーマット概説
MPEG IMXフォーマットについて説明しています。

メンテナンスマニュアル
Volume 3
(9-967-903-1X)

Section 1　Schematic Diagrams and Frame Wiring
フレーム図，回路図を記載しています。

Manual Structure

Purpose of this manual

This manual is the maintenance manual volume 2 of the following models.

HD Digital Videocassette Recorder	HDW-2000/D2000/M2000/M2000P/S2000/S2000P
HD Digital Videocassette Player	HDW-M2100/M2100P
Control Panel Unit	HKDW-101
SDTI Interface Board	HKDW-102
Digital Videocassette Recorder	DVW-2000/2000P/M2000/M2000P
Control Panel Unit	BKDW-101
Digital Videocassette Recorder	MSW-2000/A2000/A2000P/M2000/M2000P/M2000E/M2000EP
Digital Videocassette Player	MSW-M2100/M2100P/M2100E/M2100EP
Control Panel Unit	BKMW-101
HD Upconverter Board	BKMW-104
Network Interface Board	BKMW-E2000/E3000

This maintenance manual (Volume 1, 2, and 3) is intended for use by trained system and service engineers, and provides the information of maintenance and detailed service (parts replacement, guideline for adjustment, schematic diagrams, board layouts, detailed parts list).

This manual (volume 2) describes detailed parts list, block diagrams, and board layouts.

Related manuals

Besides this "Maintenance manual", the following manuals are available.

- **Operation Manual (Supplied with this unit or options.)**
  This manual is necessary for application and operation (and installation) of this unit.

- **Installation Manual (Supplied with this unit or options.)**
  This manual describes the information on installing this unit.

- **Protocol Manual of Remote (9-pin) Connector (available on request)**
  This manual explains the protocol for controlling the VTR via the RS-422A (9-pin serial remote). If this manual is required, please contact your local Sony Sales Office/Service Center.

- **Interface Manual of Parallel I/O (50-pin) Connector (available on request)**
  This manual explains the protocol for controlling the VTR via the parallel (50-pin). If this manual is required, please contact your local Sony Sales Office/Service Center.

- **"Semiconductor Pin Assignments" CD-ROM (Available on request)**
  This "Semiconductor Pin Assignments" CD-ROM allows you to search for semiconductors used in this unit.
  Semiconductors that cannot be searched for on this CD-ROM are listed in the maintenance manual volume 2 for this unit. The maintenance manual volume 2 contains a complete list of all semiconductors and their ID Nos., and thus should be used together with the CD-ROM.
  Part number: 9-968-546-XX

Contents

This maintenance manual (volume 1, volume 2, and volume 3) is organized by following sections.

Maintenance manual volume 2 (9-967-902-1X)

Section 1 Spare Parts
Describes the exploded views, the mechanical parts list, and the electrical parts list.

Section 2 Semiconductor Pin Assignments
This section contains information on semiconductors used for unit.
It includes a complete list of the semiconductors and their ID Nos. for retrieving information on "Semiconductor Pin Assignments" CD-ROM, which is available separately.
Please refer to this section together with the "Semiconductor Pin Assignments" CD-ROM.
Information on the semiconductors not contained in the CD-ROM at the time of issue of this manual, if any, is given in this section as well.

Section 3 Circuit Description and Block Diagrams
Describes the circuit description and the block diagrams of overall and each board.

Section 4 Board Layouts
Describes the board layouts for the unit.

Maintenance manual volume 1 (9-967-901-1X)

Section 1 Service Overview
Explains fundamental area of the information that is required to service, (removal of cabinet and cassette compartment, the functions of printed circuit board, the locations of main part, fixture and measuring equipment information, notes, etc.), the measures against trouble and ISR (Interactive Status Reporting).

Section 2 Error Message
Explains the error messages.

Section 3 Maintenance Mode
Explains each menu of the maintenance mode.

Section 4 Periodic Maintenance and Inspection
Explains the recommended periodic maintenance and the cleaning procedure.

Section 5 Replacement of Main Parts
Explains the replacement of mechanical parts, power supply unit, and circuit boards.

Section 6 Tape Path Alignment
Explains the tape path alignment after replacement of parts that are described in Section 5.

Section 7 Electrical Alignment after Main Parts Replacement
Explains the electrical alignment associated with replacement of parts that are described in Section 5.

Section 8 Electrical Alignment
Explains the electrical alignment for the maintenance of this unit.

Section 9 Video Head Projection Measurement
Explains the precedure for video head projection measurement.

Section 10 MPEG IMX Format Outline
Explains the MPEG IMX Format.

Maintenance manual volume 3 (9-967-903-1X)

Section 1 Schematic Diagrams and Frame Wiring
Describes the frame wiring and the schematic diagrams for the unit.

Section 1
Spare Parts

1-1. Notes on Repair Parts

1. Safety Related Components Warning

WARNING

Components marked ⚠ are critical to safe operation. Therefore, specified parts should be used in the case of replacement.

2. Standardization of Parts

Some repair parts supplied by Sony differ from those used for the unit. These are because of parts commonality and improvement.
Parts list has the present standardized repair parts.

3. Stock of Parts

Parts marked with "o" at SP (Supply Code) column of the spare parts list may not be stocked. Therefore, the delivery date will be delayed.

4. Harness

Harnesses with no part number are not registered as spare parts.
In need of repair, get components shown in the list and repair using them.

5. Destination Representation

The part indicated "For J" or "For SY" in the spare parts list is used in the unit written below.

For SY: The part is used in a unit for regions except Japan.

For J: The part is used in a unit for Japan.

1-1. 補修部品注意事項

1. 安全重要部品

⚠警告

⚠印のついた部品は安全性を維持するために重要な部品です。したがって，交換する時は必ず指定の部品を使ってください。

2. 部品の共通化

ソニーから供給する補修用部品は，セットに使われているものと異なることがあります。
これは部品の共通化，改良等によるものです。
部品表には現時点での共通化された補修用部品が記載されています。

3. 部品の在庫

部品表のSP (Supply code) 欄に "o" で示される部品は在庫していないことがあり，納期が長くなることがあります。

4. ハーネス

部品番号の記載されていないハーネスは，サービス部品として登録されていません。
これらは，リストに展開されているコンポーネント部品で補修してください。

5. 仕向区分の表記

部品表中，下記表示のある部品は，その仕向で使用している部品です。

For SY: 海外向けモデルに使用

For J: 日本向けモデルに使用

1-2. Exploded Views

Index

Model	Item	No.	Title	Page
Common	Reel table assembly Motor holder assembly Worm assembly	1-	Reel Chassis Block	1-4
	Drum assembly TG-2, TG-3, TG-4 W cleaner assembly	101-	Drum and W Cleaner Block	1-6
	AT head assembly S plate assembly Pinch press assembly Capstan motor CTL/FE head assembly S tension regulator T ten assembly T drawer assembly	201-	CTL/FE Head and T Drawer Block	1-8
	MC sensor assembly Ring assembly Gear box assembly	301-	Threading Ring and Gear Box Block	1-10
	DT-47 board DR-508 board AE-31 board TC-104 board	401-	Printed Circuit Board Block	1-12
	Upper lid assembly Front panel assembly Bottom plate Cabinet	501-	Ornamental Panel Block	1-14
	SC guide assembly Switching regulator	601-	SC Guide Block and Switching Regulator Block	1-16
	Cassette compartment assembly Hinge assembly Cassette compartment plate assembly	701-	Cassette Compartment Block	1-18
	MB-884 assembly DC fans	801-	Motherboard and DC Fans	1-20
MSW Series	Plug-in boards (DM-123, EPR-1, APR-52, DPR-155/229, SS-89, VPR-64, AU-272, EQ-84 and VN-13)	901-	Plug-in Board Block (MSW Series)	1-22
	Plug-in boards (Option) (HIF-1 and VN-13)	951-	Plug-in Board Block (MSW Series Option)	1-24
	Connector panel assembly AC panel assembly	1001-	Connector Panel Block and AC Panel Block (MSW Series)	1-26
	Control panel assembly (BKMW-101)	1101-	Control Panel Block (MSW Series)	1-28
HDW Series	Plug-in boards (DM-123, SS-89, HPR-1, HIF-1, APR-52, DPR-229, VPR-64, AU-272, and EQ-84)	1201-	Plug-in Board Block (HDW Series)	1-30
	Connector panel assembly AC panel assembly	1301-	Connector Panel Block and AC Panel Block (HDW Series)	1-32
	Control panel assembly (HKDW-101)	1401-	Control Panel Block (HDW Series)	1-34
DVW Series	Plug-in boards (DM-123, SS-89, HPR-1, HIF-1, APR-52, DPR-229, VPR-91, AU-272, and EQ-84)	1501-	Plug-in Board Block (DVW Series)	1-36
	Connector panel assembly AC panel assembly	1601-	Connector Panel Block and AC Panel Block (DVW Series)	1-38
	Control panel assembly (BKMW-101)	1701-	Control Panel Block (DVW Series)	1-40

Reel Chassis Block

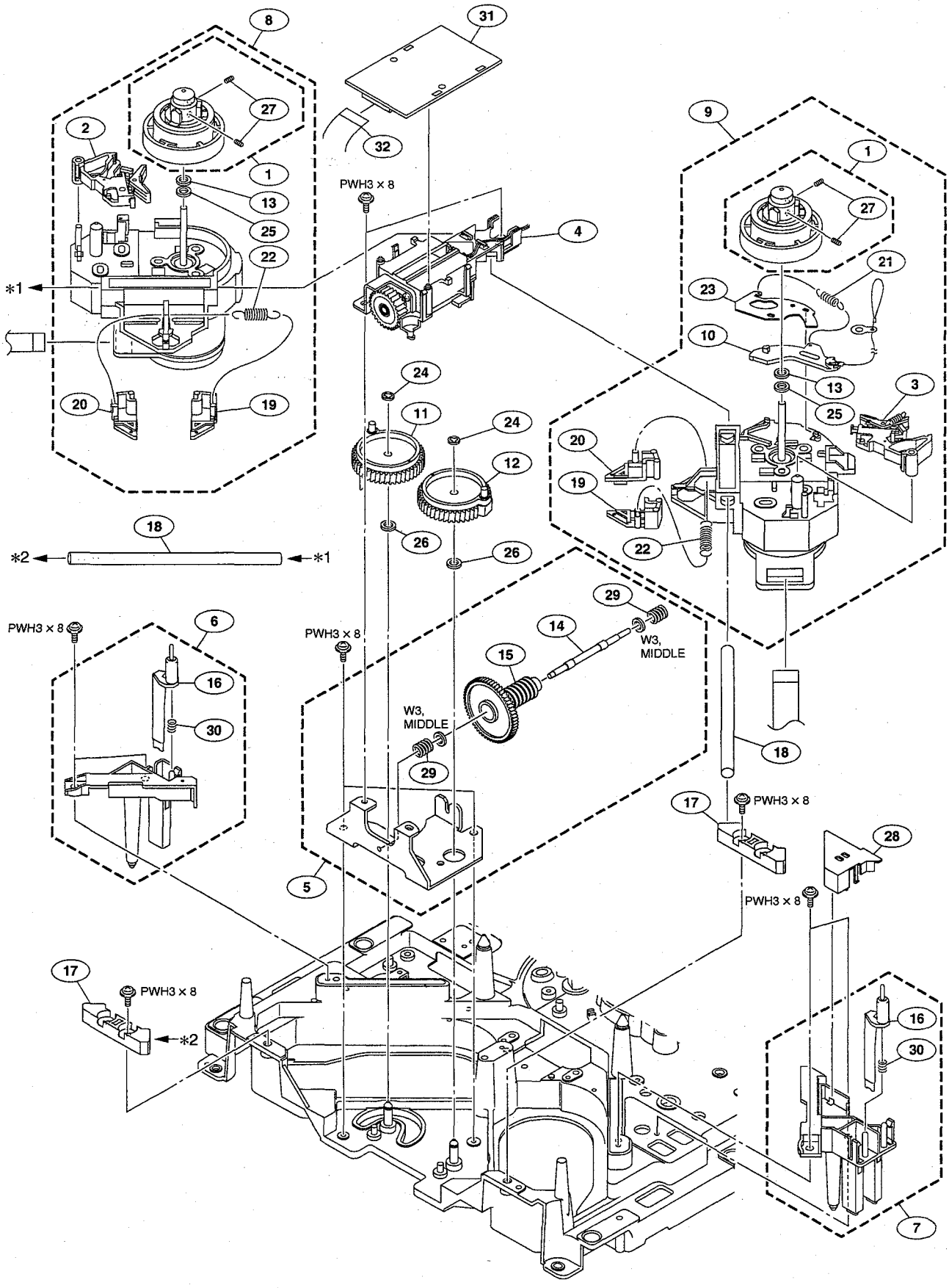

No.	Part No.	SP	Description
1	A-8279-279-A	o	TABLE ASSY,REEL
2	A-8279-280-D	o	BRAKE(S)ASSY
3	A-8279-281-D	o	BRAKE(T)ASSY
4	A-8279-283-A	s	HOLDER ASSY,MOTOR
5	A-8279-284-C	s	WORM ASSY
6	A-8279-285-A	s	HOLDER ASSY,PLATE(S)
7	A-8279-286-C	s	HOLDER ASSY,PLATE(T)
8	A-8325-412-A	s	BLOCK (S) ASSY (RP), RM
9	A-8325-413-A	s	BLOCK (T) ASSY (RP), RM
10	X-3605-770-4	o	WIRE ASSY
11	X-3605-771-2	o	GEAR(S)ASSY,DRIVING
12	X-3605-772-1	o	GEAR(T)ASSY,DRIVING
13	3-188-108-01	s	SPACER(DIA. 4)(PLA)
14	3-624-950-01	o	SHAFT,WORM
15	3-624-951-01	o	GEAR,RELAY
16	3-624-952-01	o	LEVER,MR
17	3-624-953-01	s	HOLDER,SHAFT
18	3-624-954-01	s	SHAFT,SLIDE
19	3-624-957-01	o	ARM(A),LIMITER
20	3-624-958-01	o	ARM(B),LIMITER
21	3-624-965-01	o	ME,SPRING
22	3-624-966-01	o	SPRING,RIMITER
23	3-624-969-01	o	RETAINER,ARM
24	3-650-537-00	o	WASHER (PLA)
25	3-701-441-11	s	WASHER PLASTIC (4.1X0.25)
26	3-701-441-21	s	WASHER PLASTIC (4.1X0.5)
27	3-701-505-00	s	SET-SCREW,HEX 3X3 ST
28	3-633-270-02	s	COVER, WIRE (for latest products)
29	3-633-290-01	s	SPRING,COMPRESSION
30	4-880-426-01	o	SPRING,COMPRESSION
31	A-8328-379-B	s	MOUNTED CIRCUIT BOARD, SE-606A
32	1-757-387-11	s	WIRE, FLAT TYPE (4 CORE)

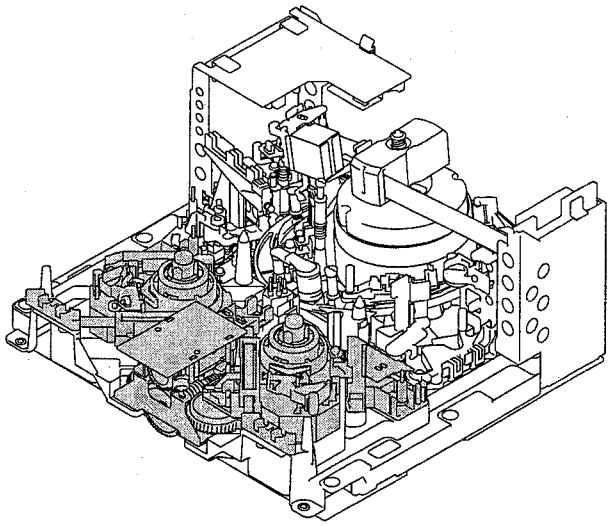

Screw/Washer

Part No.	SP	Description
7-682-903-21	s	SCREW +PWH 3X8
7-688-003-11	s	WASHER W3 (M)

Drum and W Cleaner Block

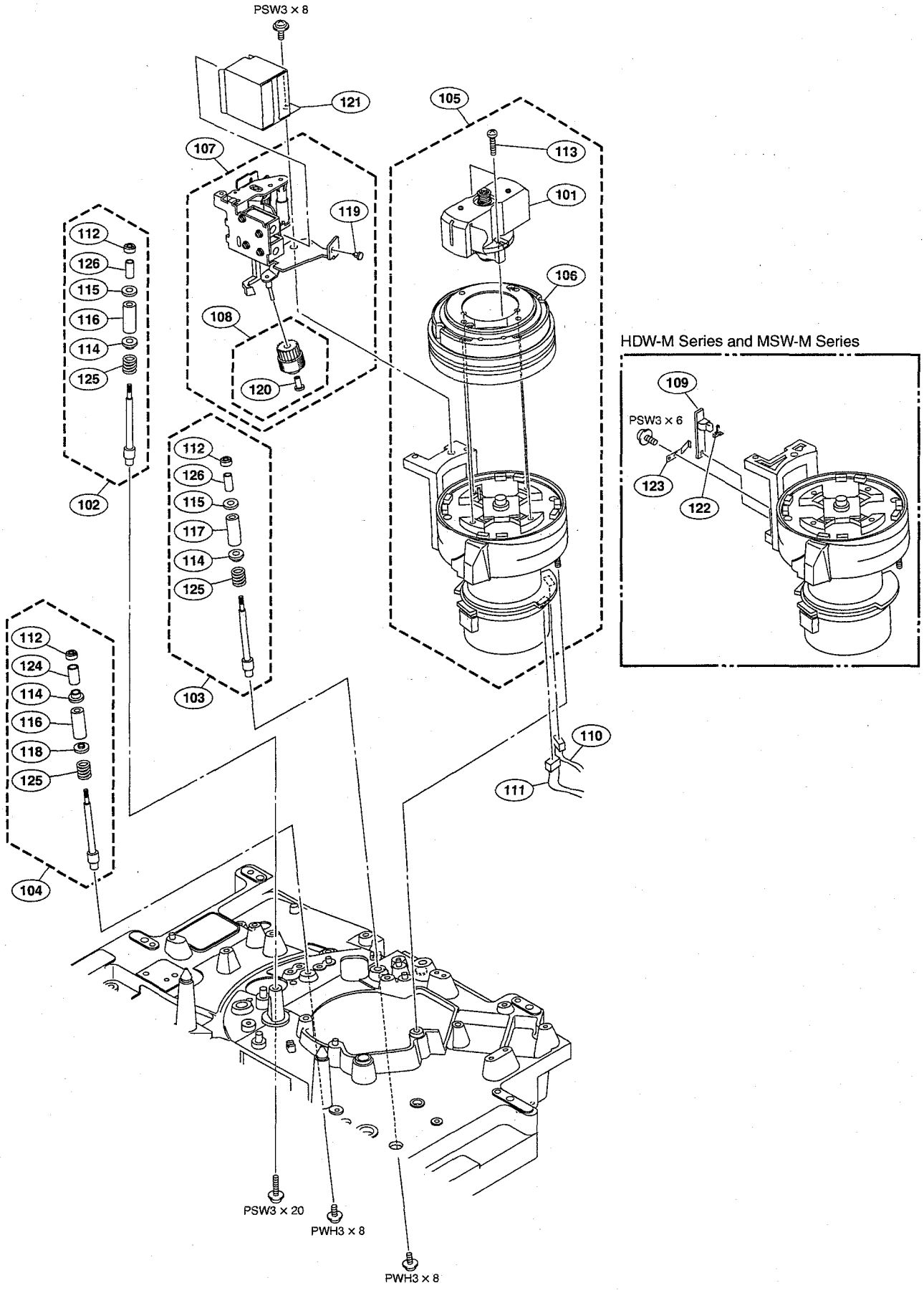

No.	Part No.	SP	Description
101	A-8267-571-C	s	RING (13) ASSY (RP),BRUSH SLIP
	(MSW-A Series, MSW-M Series, HDW-M Series, HDW-S Series, HDW-A2100, DVW-M2000 Series)		
	A-8320-032-C	s	RING (9) ASSY (RP),BRUSH SLIP
	(MSW-2000, HDW-2000/D2000, DVW-2000/2000P)		
102	A-8279-288-A	o	TG-2 ASSY
103	A-8279-289-A	o	TG-3 ASSY
104	A-8279-290-A	o	TG-4 ASSY
105	A-8325-095-B	s	DRUM ASSY,DJH-26B-R
	(MSW-A Series, MSW-M2000/M2000E/M2000P/M2000EP, HDW-M2000/M2000P, HDW-S Series)		
	A-8327-909-A	s	DRUM ASSY,DJH-28A-R
	(HDW-2000/D2000)		
	A-8327-913-A	s	DRUM ASSY,DJH-29A-R
	(HDW-A2100)		
	A-8327-726-A	s	DRUM ASSY,DJH-32A-R
	(MSW-M2100/M2100E/M2100P/M2100EP)		
	A-8329-651-A	s	DRUM ASSY,DJH-33A-R
	(HDW-M2100/M2100P)		
	A-8345-576-A	s	DRUM ASSY,DJH-35A-R
	(MSW-2000)		
	A-8347-929-A	s	DRUM ASSY,DJH-37A-R
	(DVW-M2000)		
	A-8347-930-A	s	DRUM ASSY,DJH-38A-R
	(DVW-M2000P)		
	A-8347-931-A	s	DRUM ASSY,DJH-39A-R
	(DVW-2000)		
	A-8347-932-A	s	DRUM ASSY,DJH-40A-R
	(DVW-2000P)		
106	A-8325-096-C	s	DRUM ASSY,UPPER,DJR-26B-R
	(MSW-A Series, MSW-M2000/M2000E/M2000P/M2000EP, HDW-M2000/M2000P, HDW-S Series)		
	A-8327-911-A	s	DRUM ASSY,UPPER,DJR-28A-R
	(HDW-2000/D2000)		
	A-8327-915-A	s	DRUM ASSY,UPPER,DJR-29A-R
	(HDW-A2100)		
	A-8327-727-A	s	DRUM ASSY,UPPER,DJR-32A-R
	(MSW-M2100/M2100E/M2100P/2100EP)		
	A-8329-653-A	s	DRUM ASSY,UPPER,DJR-33A-R
	(HDW-M2100/M2100P)		
	A-8345-577-A	s	DRUM ASSY,UPPER,DJR-35A-R
	(MSW-2000)		
	A-8347-933-A	s	DRUM ASSY,UPPER,DJR-37A-R
	(DVW-M2000)		
	A-8347-934-A	s	DRUM ASSY,UPPER,DJR-38A-R
	(DVW-M2000P)		
	A-8347-935-A	s	DRUM ASSY,UPPER,DJR-39A-R
	(DVW-2000)		
	A-8347-936-A	s	DRUM ASSY,UPPER,DJR-40A-R
	(DVW-2000P)		
107	A-8325-407-A	s	CLEANER ASSY, W (RP)
108	A-8325-415-A	s	CLEANER ASSY (RP)
109	A-8327-545-A	o	MOUNTED CIRCUIT BOARD, DU-107
	(MSW-M Series, HDW-M Series/S2000/S2000P, DVW-M2000/M2000P)		
110	1-960-388-12	o	HARNESS, SUB (RF REC)
111	1-960-389-12	o	HARNESS, SUB (RF PB)
112	2-203-519-21	s	NUT(A),LOCK,PIVOT (COPPER)
113	3-180-163-01	s	SCREW (2X16)
114	3-180-669-02	s	FLANGE,FIXED GUIDE USE
115	3-181-489-01	s	FLANGE,DIA.8
116	3-181-490-01	o	SLEEVE,DIA.7
117	3-181-491-01	o	SLEEVE, DIA. 6
118	3-190-819-01	s	FLANGE (1), DIA. 8
119	3-531-576-01	s	RIVET
120	3-625-203-02	s	CAP
121	3-625-204-02	o	SHIELD CASE
122	3-631-551-01	o	SPACER
	(MSW-M Series/HDW-M Series)		
123	3-631-552-01	o	SPRING, PLATE
	(MSW-M Series/HDW-M Series)		
124	3-659-757-01	s	SPACER (4X8.5)
125	3-738-730-01	s	SPRING,COMPRESSION(COIL) (ST)
126	4-885-848-01	o	SPACER (DIA 3X8)

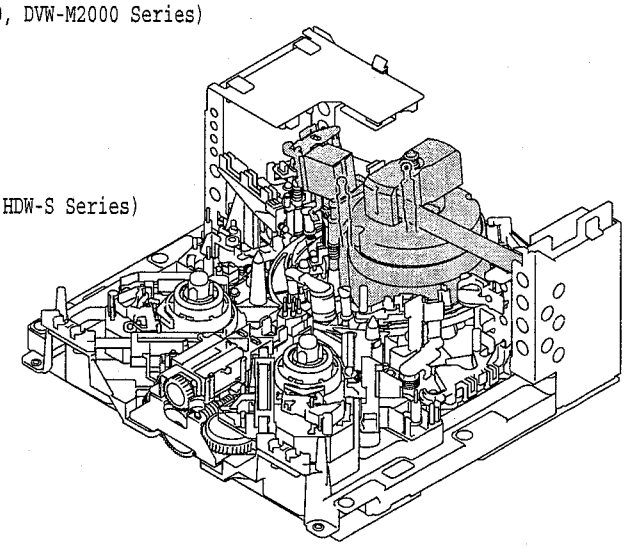

Screws

Part No.	SP	Description
7-682-903-21	s	SCREW +PWH 3X8
7-682-948-01	s	SCREW +PSW 3X8
7-682-953-09	s	SCREW +PSW 3X20

CTL/FE Head and T Drawer Block

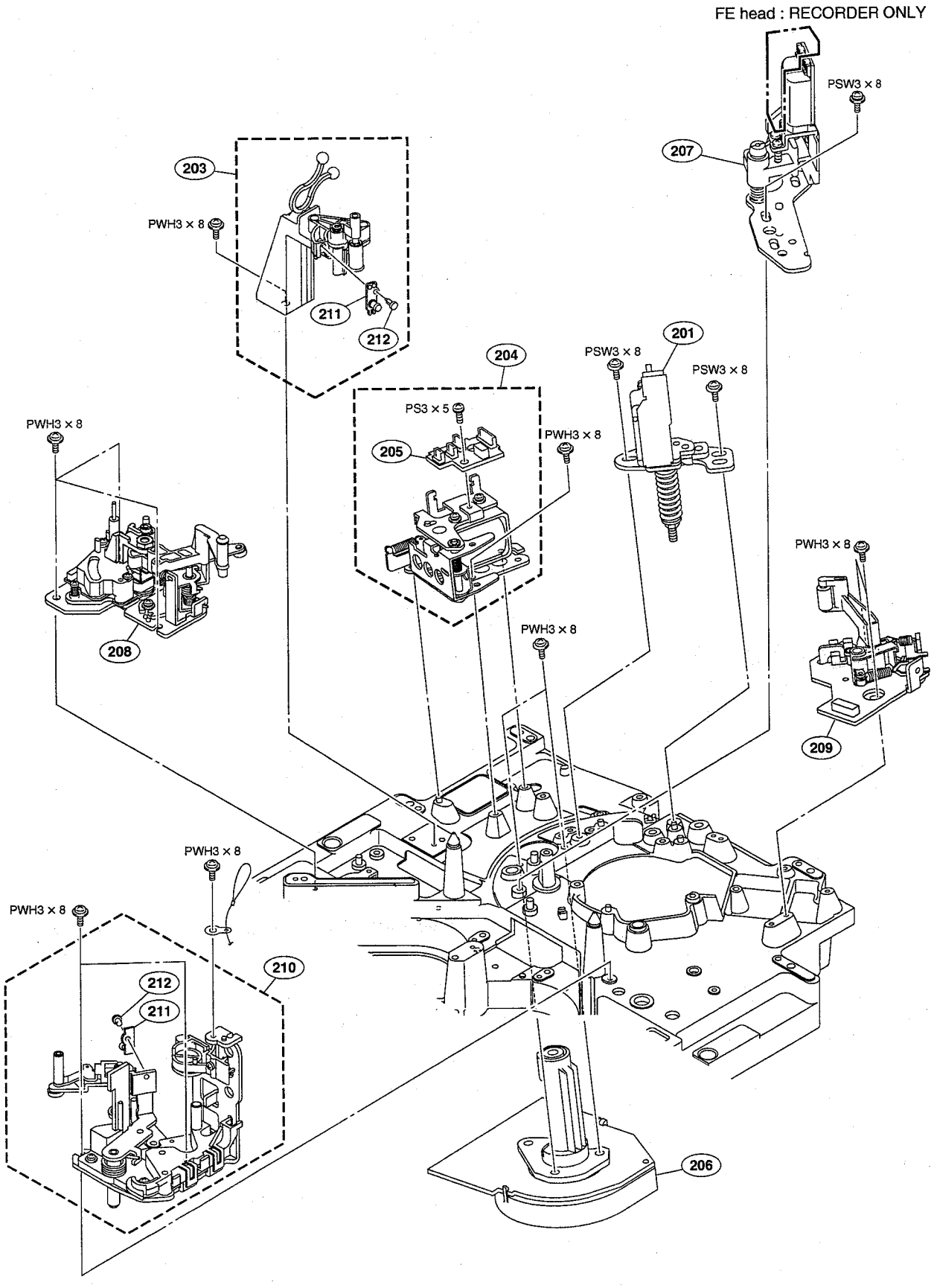

No.	Part No.	SP	Description
201	A-8267-422-C	o	HEAD ASSY, AT
203	A-8346-063-B	o	PLATE ASSY,S
204	A-8324-938-A	s	PRESS ASSY, PINCH
205	A-8324-941-A	o	MOUNTED CIRCUIT BOARD,HN-268
206	A-8325-190-A	s	MOTOR,CAPSTAN(RP)(SCV16A/J-N)
207	A-8325-406-B	o	HEAD ASSY (RP), CTL / FE (for Recorder)
	A-8328-365-B	o	HEAD ASSY (RP), CTL (for Player)
208	A-8325-409-A	s	REGULATOR ASSY (RP), S TENSION
209	A-8325-410-A	s	T TEN ASSY (RP)
210	A-8325-411-A	s	DRAWER ASSY (RP), T
211	1-543-316-32	s	HEAD, SENSING (SMALL TYPE)
212	2-279-715-01	s	RIVET,NYLON

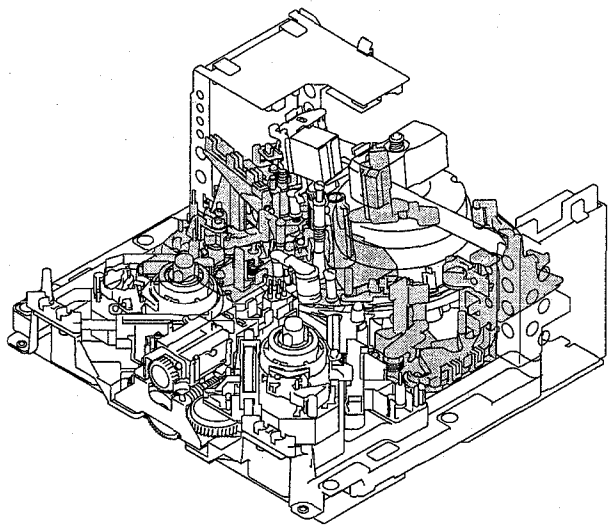

Screws

Part No.	SP	Description
7-628-253-20	s	SCREW +PS 2X6
7-682-646-09	s	SCREW +PS 3X5
7-682-903-21	s	SCREW +PWH 3X8
7-682-948-01	s	SCREW +PSW 3X8

Threading Ring and Gear Box Block

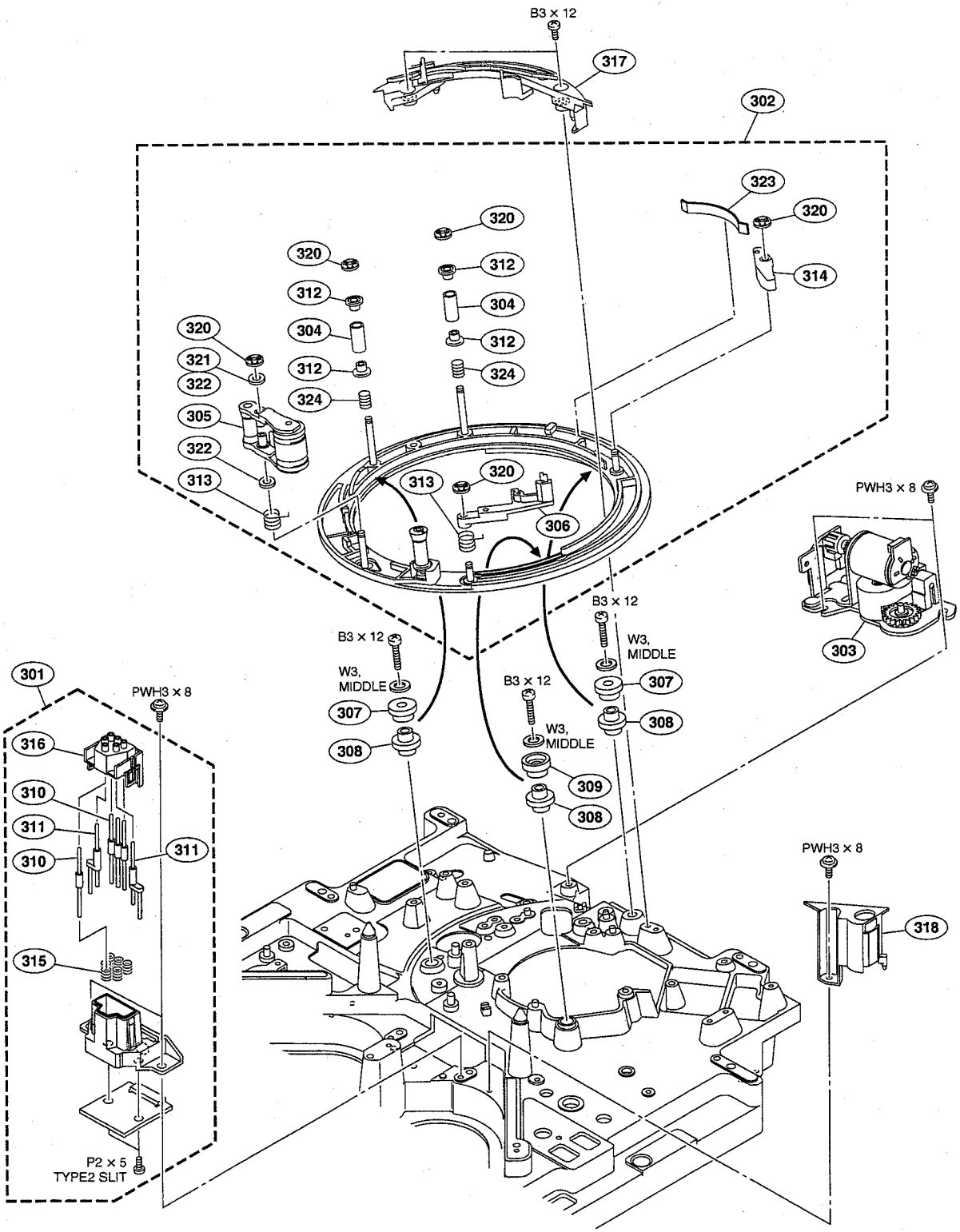

No.	Part No.	SP	Description	
301	A-8279-282-A	s	SENSOR ASSY,MC	
302	A-8324-937-F	s	RING ASSY	
303	A-8325-414-A	s	BOX ASSY, GEAR (RP)	
304	X-3167-052-2	s	ROLLER ASSY, ONEBARE	
305	X-3167-054-6	s	ASSY, PINCH ARM	
306	X-3605-789-1	o	ARM ASSY,CL	
307	3-180-677-01	s	ROLLER, RING	
308	3-180-678-01	s	SHAFT, RING ROLLER	
309	3-180-679-01	s	ROLLER, (B) RING	
310	3-180-757-01	o	PIN (1), MC	
311	3-180-758-01	o	PIN (2), MC	
312	3-629-781-01	s	FLANGE, ONEBARE USE	
313	3-180-849-01	s	SPRING (C), TORSION COIL	
314	3-180-850-01	s	ARM, LOCK	
315	3-554-202-01	s	SPRING, COMPRESSION	
316	3-624-970-01	o	CAP,MC	
317	3-624-986-01	s	RAIL,GUIDE,CL	
318	3-625-217-01	o	GUARD,PA	
320	3-669-596-01	s	WASHER,2.3	(PLA)
321	3-701-439-01	s	WASHER PLASTIC (3.1X0.13)	
322	3-701-439-11	s	WASHER PLASTIC (3.1X0.25)	
323	3-714-587-01	o	SPRING, LEAF	(STEEL)
324	4-879-563-01	s	SPRING	(STEEL)

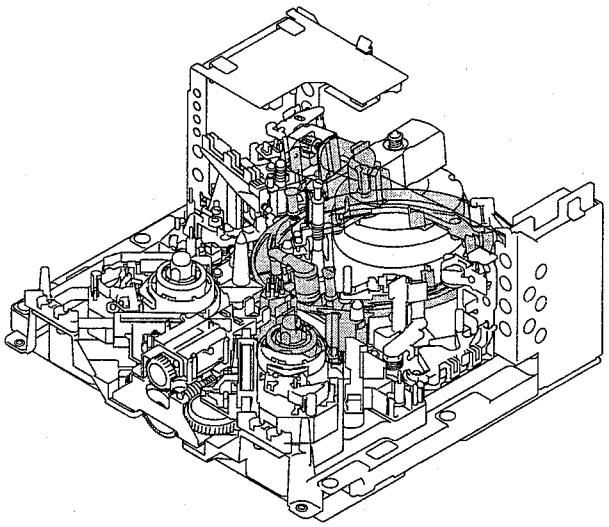

Screws/Washer

Part No.	SP	Description
7-682-550-09	s	SCREW +B3X12
7-682-903-21	s	SCREW +PWH 3X8
7-685-103-19	s	SCREW +PTP 2X5
7-688-003-11	s	WASHER W3 (M)

Printed Circuit Board Block

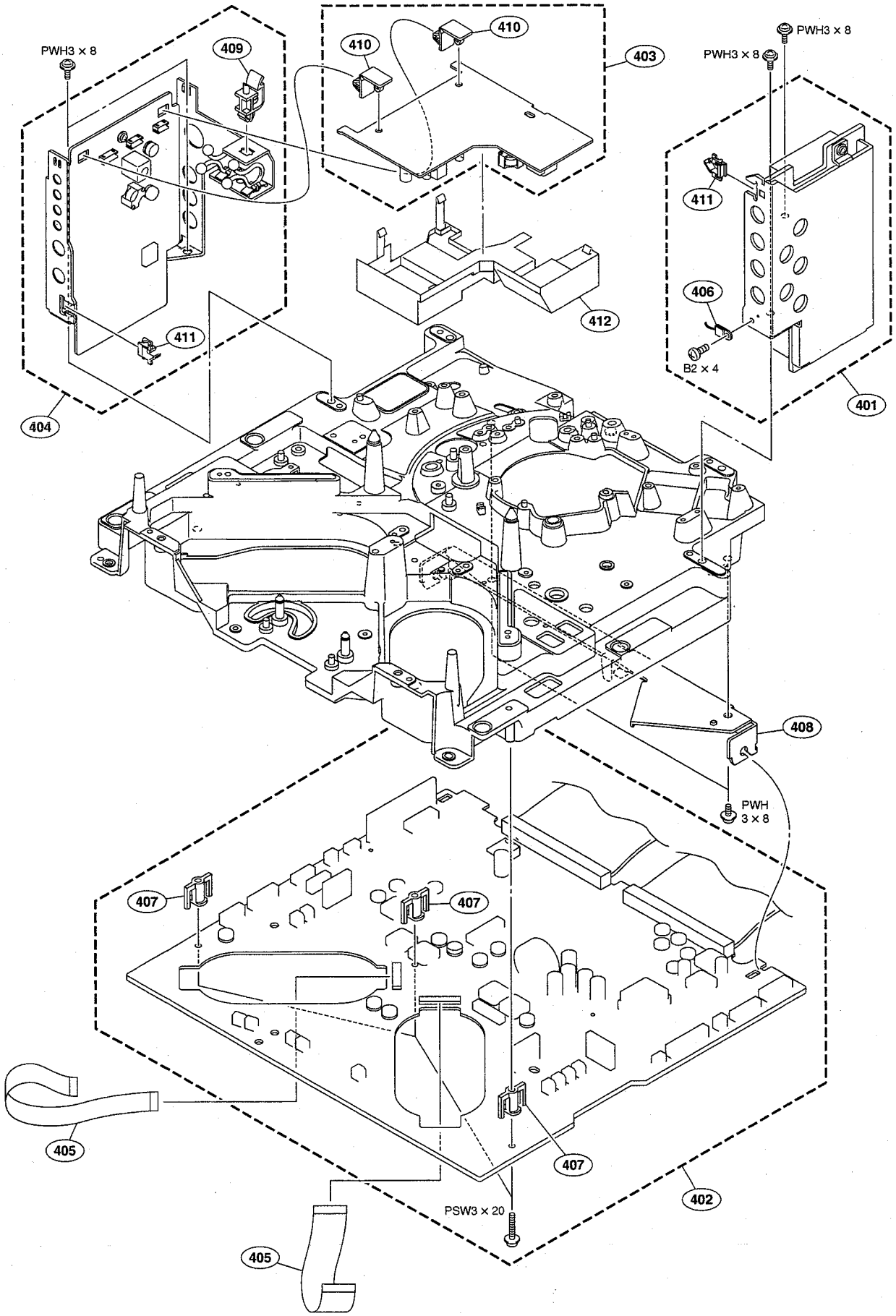

No.	Part No.	SP	Description
401	A-8324-870-B	s	MOUNTED CIRCUIT BOARD, DT-47
402	A-8346-853-B	s	MOUNTED CIRCUIT BOARD, DR-508
403	A-8327-127-B	s	MOUNTED CIRCUIT BOARD, AE-31H (MSW-A2000/M2000/M2000E/M2100/M2100E, HDW-2000/A2100/D2000/M2000/M2100/S2000, DVW-2000/M2000)
	A-8327-672-B	s	MOUNTED CIRCUIT BOARD, AE-31HP (MSW-A2000P/M2000P/M2000EP/M2100P/M2100EP, HDW-M2000P/M2100P/S2000P, DVW-2000P/M2000P)
404	A-8324-894-A	o	MOUNTED CIRCUIT BOARD, TC-104
405	1-677-293-21	s	PWB, FL-276 FLEXIBLE
406	1-803-490-12	s	SENSOR, DEW CONDENSATION
407	3-624-978-01	o	P HOLDER
408	3-624-991-01	o	BRACKET(A)
409	3-682-047-01	o	HOLDER(A),PC BOARD
410	3-701-832-02	o	HINGE, CIRCUIT BOARD
411	4-641-552-01	o	SADDLE, LOCK EDGE
412	3-690-668-02	o	COVER, AE

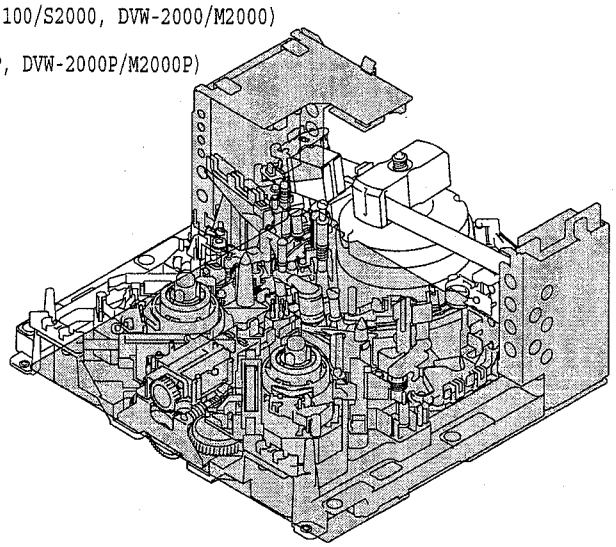

Screws

Part No.	SP	Description
7-621-772-10	s	SCREW +B2X4
7-682-903-21	s	SCREW +PWH 3X8
7-682-953-09	s	SCREW +PSW 3X20

Ornamental Panel Block

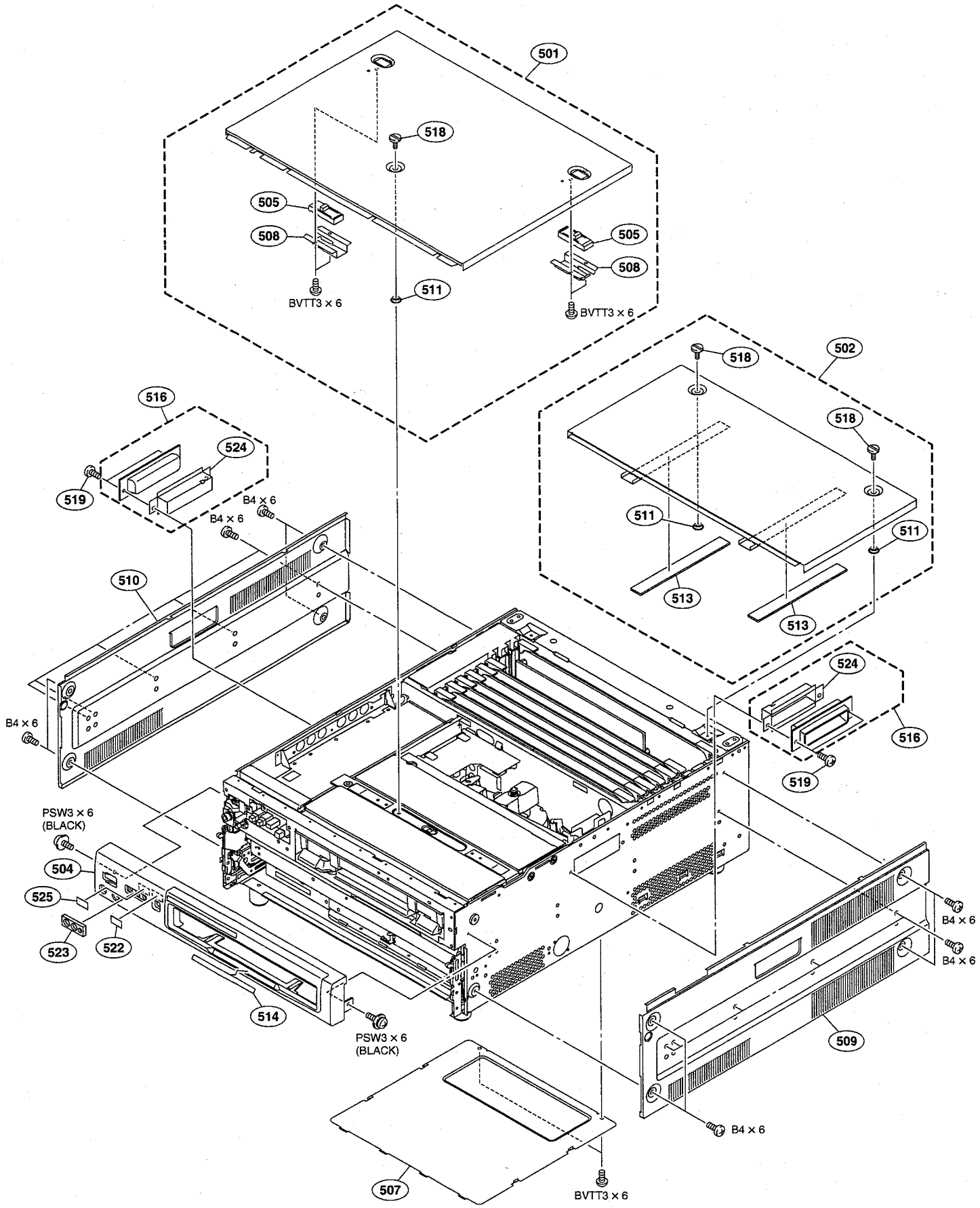

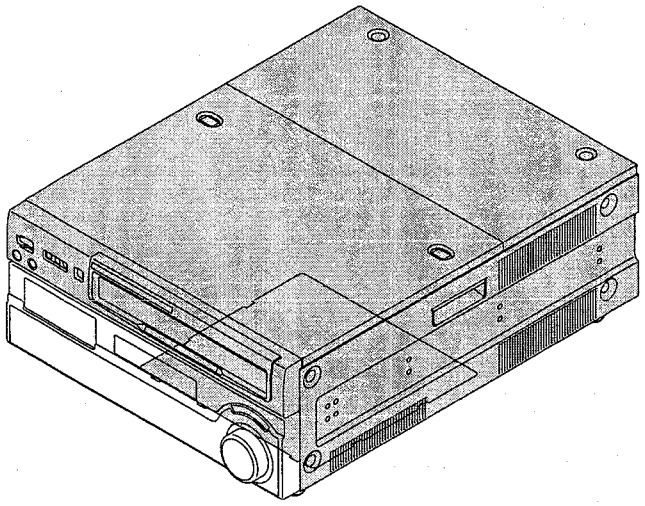

No.	Part No.	SP	Description
501	A-8279-357-G	s	LID (FRONT) ASSY, UPPER (MSW Series, DVW Series)
	A-8279-497-G	o	LID (FRONT) ASSY (HDW), UPPER (HDW Series)
502	A-8279-358-F	s	LID(REAR) ASSY,UPPER (MSW Series, DVW Series)
	A-8279-498-F	o	LID(REAR) ASSY (HDW), UPPER (HDW Series)
504	X-3605-884-4	o	PANEL ASSY, FRONT (MSW-A Series, MSW-M2000/M2000P, DVW Series)
	X-3608-127-2	o	PANEL ASSY (HD), FRONT (HDW-2000/A2100/D2000/M2000/M2000P/S2000/S2000P)
	X-3608-164-1	o	PANEL ASSY, FRONT (MSW-M2100/M2100P)
	X-3608-352-1	o	PANEL ASSY (HD), FRONT (HDW-M2100/M2100P)
	X-3608-511-2	o	PANEL ASSY (E), FRONT (BKMW-E2000/E3000, MSW-M2000E/M2000EP/M2100E/M2100EP)
505	3-180-751-01	o	MD, SLIDER
507	3-625-725-06	o	PLATE, BOTTOM
508	3-625-756-02	o	BRACKET,SLIDER
509	3-625-757-04	o	CABINET (RIGHT)
510	3-625-758-03	o	CABINET (LEFT)
511	3-688-102-01	s	SPACER, M4
513	3-625-763-03	o	SHEET (2)
514	3-627-900-01	o	SHEET, FORMAT (MSW Series)
	3-627-900-11	o	SHEET, FORMAT (HDW Series)
	3-627-900-21	o	SHEET, FORMAT (DVW Series)
516	A-8347-047-A	s	HANDLE
518	3-717-392-02	o	SCREW, LID
519	3-733-690-01	s	SCREW +B 4X6
522	3-633-291-01	o	STICKER, TF
523	3-635-843-01	s	PLATE, REMOTE SW (MSW Series)
	3-635-843-11	s	PLATE, REMOTE SW (HDW Series)
524	3-660-049-02	s	COVER, HANDLE
525	3-776-669-01	s	LABEL, 24P (HDW Series)

Screws

Part No.	SP	Description
7-682-560-04	s	SCREW +B4X6
7-682-947-09	s	SCREW +PSW 3X6(BLACK)
7-685-871-01	s	SCREW BVTT 3X6

SC Guide Block and Switching Regulator Block

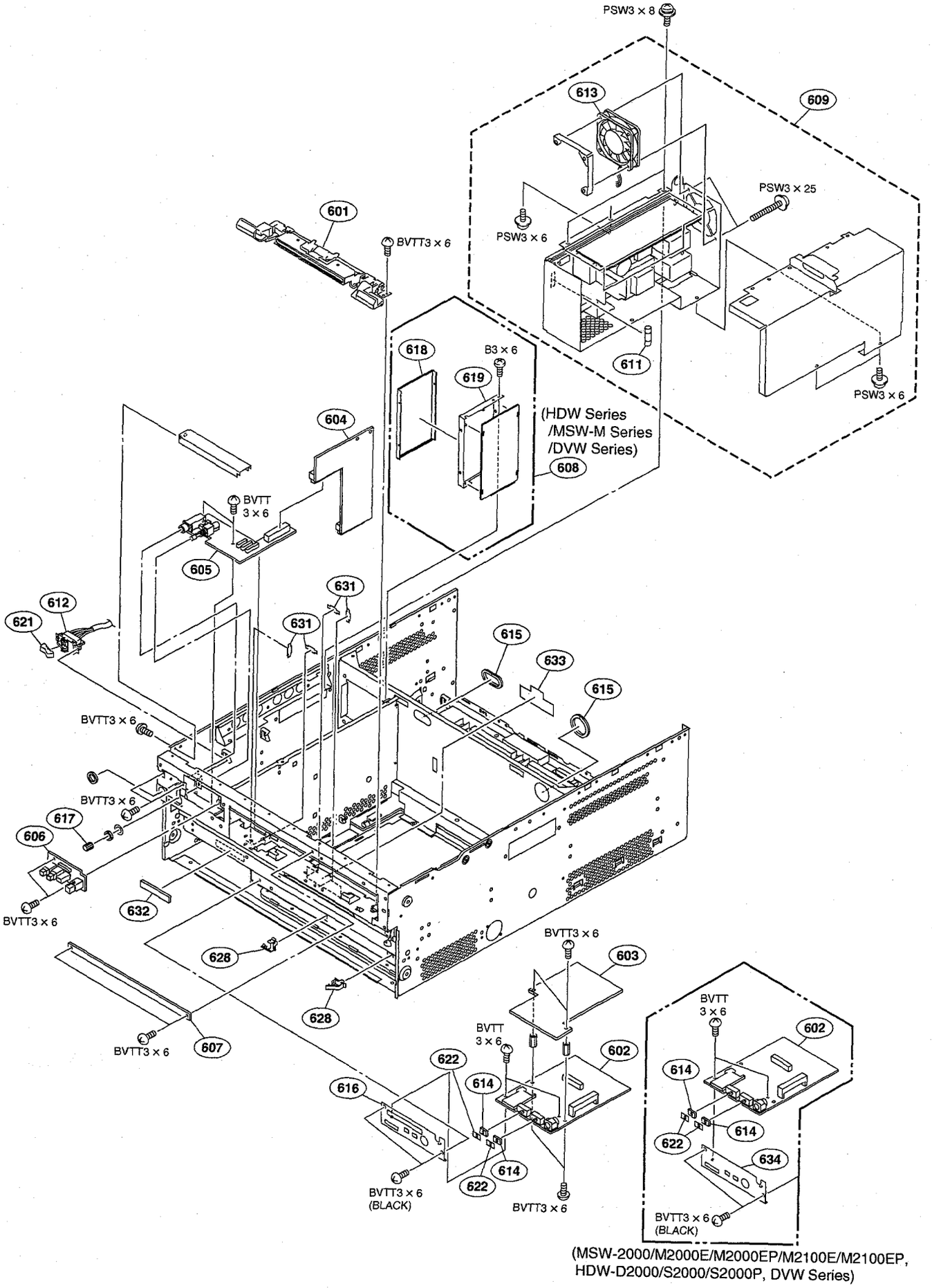

(MSW-2000/M2000E/M2000EP/M2100E/M2100EP,
HDW-D2000/S2000/S2000P, DVW Series)

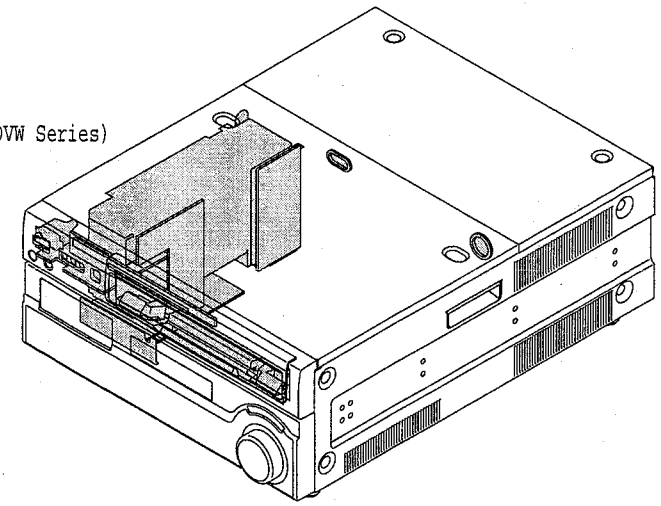

No.	Part No.	SP	Description
601	A-8279-311-E	o	GUIDE ASSY, SC
602	A-8344-893-A	s	MOUNTED CIRCUIT BOARD, FP-133
603	A-8344-895-A	s	MOUNTED CIRCUIT BOARD, FP-134 (HDW-2000, HDW-M Series, HDW-A2100, MSW-A Series, MSW-M Series)
604	A-8327-808-B	s	MOUNTED CIRCUIT BOARD, DIO-65
605	A-8324-898-A	o	MOUNTED CIRCUIT BOARD, HP-101
606	A-8324-902-A	o	MOUNTED CIRCUIT BOARD, SWC-40 (HDW Series, MSW-2000/A2000/A2000P/M2000/M2000P/M2100/M2100P, DVW Series)
	A-8345-973-A	s	MOUNTED CIRCUIT BOARD, SW-1106 (BKMW-E2000/E3000, MSW-M2000E/M2000EP/M2100E/M2100EP)
607	A-8325-257-A	o	MOUNTED CIRCUIT BOARD, LED-357
608	A-8327-129-A	o	MOUNTED CIRCUIT BOARD, CUE-13 (HDW Series, MSW-M Series, DVW Series)
609	⚠ 1-468-500-17	s	REGULATOR, SWITCHING
611	⚠ 1-576-232-12	o	FUSE (H.B.C.)
612	⚠ 1-762-953-11	s	SWITCH, POWER
613	1-787-142-11	s	FAN, D. C.
614	3-173-384-01	o	SPACER, ORNAMENTAL PLATE
615	3-556-097-00	o	BUSHING
616	3-620-554-01	s	BRACKET,FP
617	3-625-762-02	s	KNOB,HP
618	3-629-688-01	o	SHIELD CASE (U), CUE (HDW Series, MSW-M Series, DVW Series)
619	3-629-689-01	o	SHIELD CASE (B), CUE (HDW Series, MSW-M Series, DVW Series)
621	3-688-814-41	s	CAP, SWITCH
622	3-717-394-04	o	PLATE (SMALL), ORNAMENTAL, SW
628	4-215-927-01	o	CLAMP
631	3-631-650-01	o	CLAMP, HARNESS
632	3-193-487-11	o	SHIELD (A)
633	3-633-973-02	o	SHEET, SHIELD
634	3-620-536-01	s	BRACKET,FP (MSW-2000)

Screws/Washer

Part No.	SP	Description
7-624-106-04	s	RING,RETAINING,E (3MM)
7-682-947-09	s	SCREW +PSW 3X6
7-682-948-09	s	SCREW +PSW 3X8
7-682-954-09	s	SCREW +PSW 3X25
7-685-871-01	s	SCREW BVTT 3X6
7-685-871-09	s	SCREW,+BVTT 3X6 (BLACK)
7-682-547-04	s	SCREW +B 3X6

Cassette Compartment Block

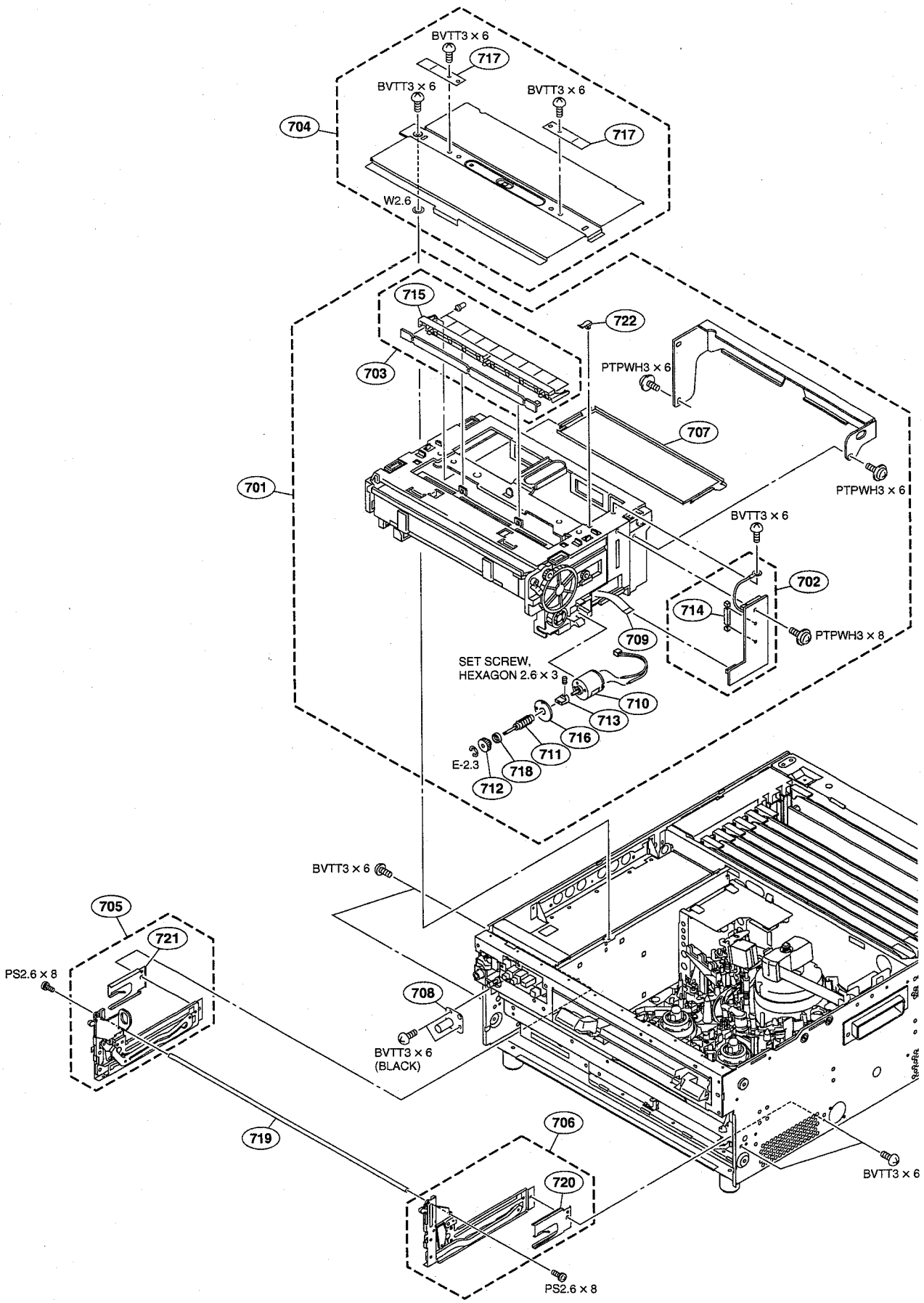

No.	Part No.	SP	Description
701	A-8345-471-C	s	CASSETTE COMPARTMENT ASSY (M)
702	A-8315-621-B	s	MOUNTED CIRCUIT BOARD, CL-29
703	A-8315-623-C	s	MOUNTED CIRCUIT BOARD, LP-81
704	A-8279-356-H	s	PLATE ASSY, CASSETTE COMPARTMENT
705	A-8325-682-G	o	HINGE (L) ASSY
706	A-8325-683-G	o	HINGE (R) ASSY
707	X-3166-217-2	s	MIRROR ASSY
708	X-3605-875-2	o	BASE ASSY
709	1-665-836-11	s	PRINTED WIRING BOARD, CL-41
710	1-698-152-12	s	MOTOR (SVD-1449), DC(4.4W)
711	3-171-418-11	s	WORM
712	3-171-419-21	s	WHEEL,GEAR
713	3-171-423-12	o	JOINT, MOTOR
714	3-171-424-11	o	HOLDER, SENSOR
715	3-171-508-13	o	HOLDER, LAMP
716	3-182-706-12	s	SPACER
717	3-182-786-02	o	SPRING, CASSETTE COMPARTMENT
718	3-188-745-01	s	BALL BEARING, NON-FLANGED
719	3-627-755-04	o	SHAFT, HINGE
720	3-628-196-01	o	LOCK (R), HINGE
721	3-628-197-01	o	LOCK (L), HINGE
722	3-671-150-01	o	CLAMP

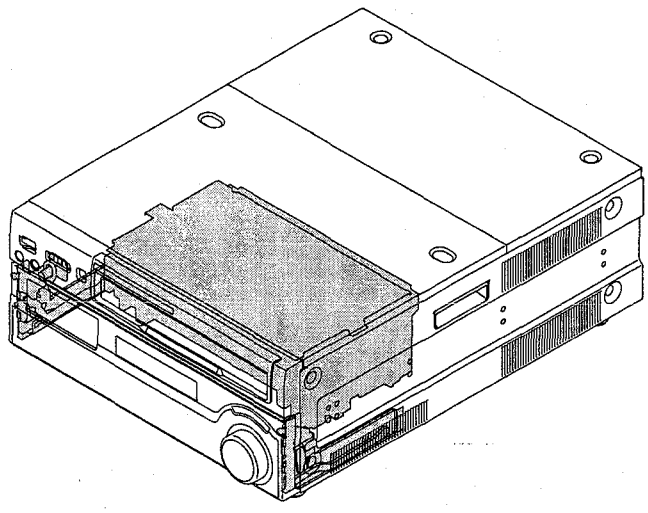

Screws/Washers

Part No.	SP	Description
7-621-734-09	s	SET-SCREW,HEX 2.6X3 (WP)
7-623-923-11	s	WASHER PLASTIC (2.6X0.3)
7-624-105-04	s	RING,E2.3
7-628-254-20	s	SCREW +PS 2.6X8
7-685-871-01	s	SCREW BVTT 3X6
7-685-871-09	s	SCREW,+BVTT 3X6 (BLACK)
7-685-903-11	s	SCREW +PTPWH 3X6
7-685-903-21	s	SCREW +PTPWH 3X8

Motherboard and DC Fans

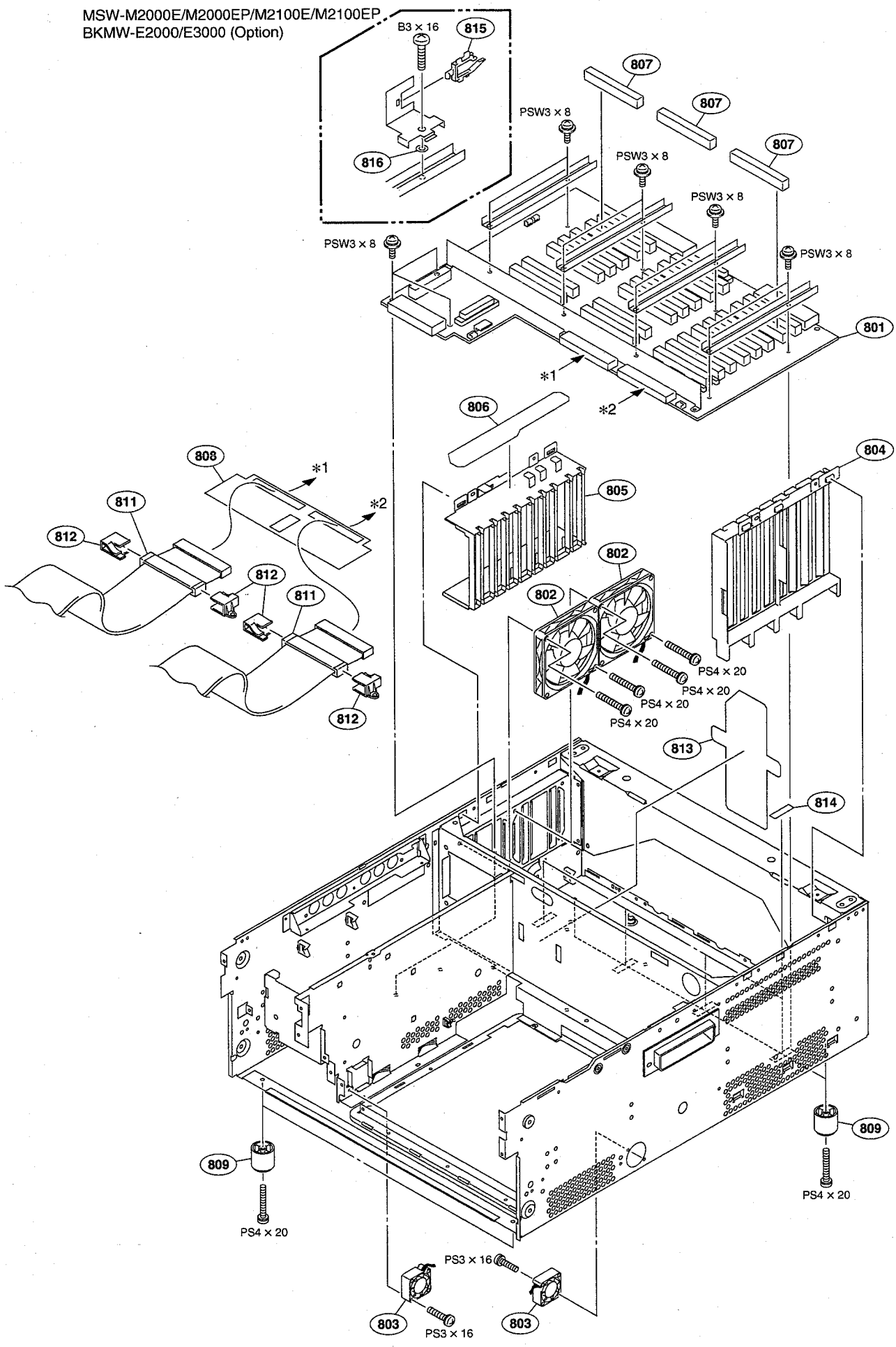

No.	Part No.	SP	Description
801	A-8324-900-B	o	MB-884 ASSY (WITH MOUNT) (HDW Series, MSW Series)
	A-1122-398-A	s	MB-884D ASSY (WITH MOUNT) (DVW Series)
802	1-763-495-11	s	FAN (80 SQUARE), D. C.
803	1-763-538-12	s	FAN, D.C. (30 SQUARE)
804	3-625-754-03	o	GUIDE RAIL (R), PCB
805	3-625-761-03	o	GUIDE RAIL (L), PCB
806	3-633-368-01	o	PROTECTOR, CABLE
807	3-628-965-01	o	COVER, DUSTER
808	3-629-835-01	o	SHEET, INSULATING
809	3-642-656-01	s	FOOT
811	4-714-678-01	o	FILTER,DATA LINE(ESD-FPD-50-1)
812	4-714-856-01	o	HOLDER, DATA LINE FILTER
813	3-633-369-02	o	PROTECTOR, HARNESS
814	3-690-631-01	o	SPACER, RUBBER
815	4-316-015-02	o	HOLDER, WIRE
816	3-715-526-01	s	WASHER (M3)

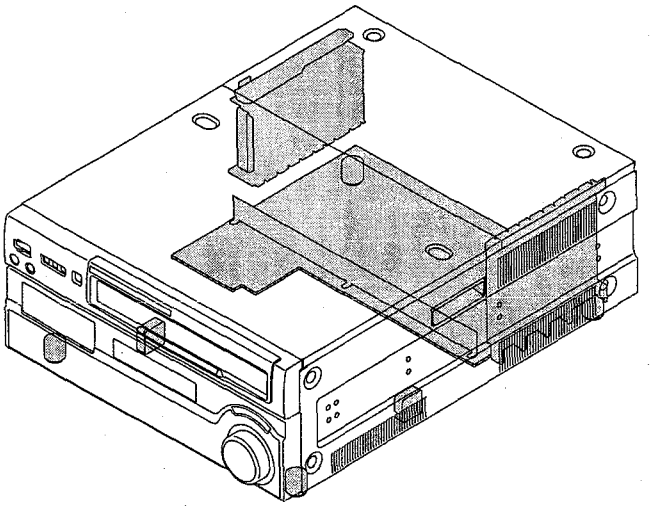

Screws

Part No.	SP	Description
7-682-552-09	s	SCREW +B 3X16
7-682-652-01	s	SCREW +PS 3X16
7-682-666-09	s	SCREW +PS 4X20
7-682-948-09	s	SCREW +PSW 3X8
7-685-871-01	s	SCREW BVTT 3X6

Plug-in Board Block (MSW Series)

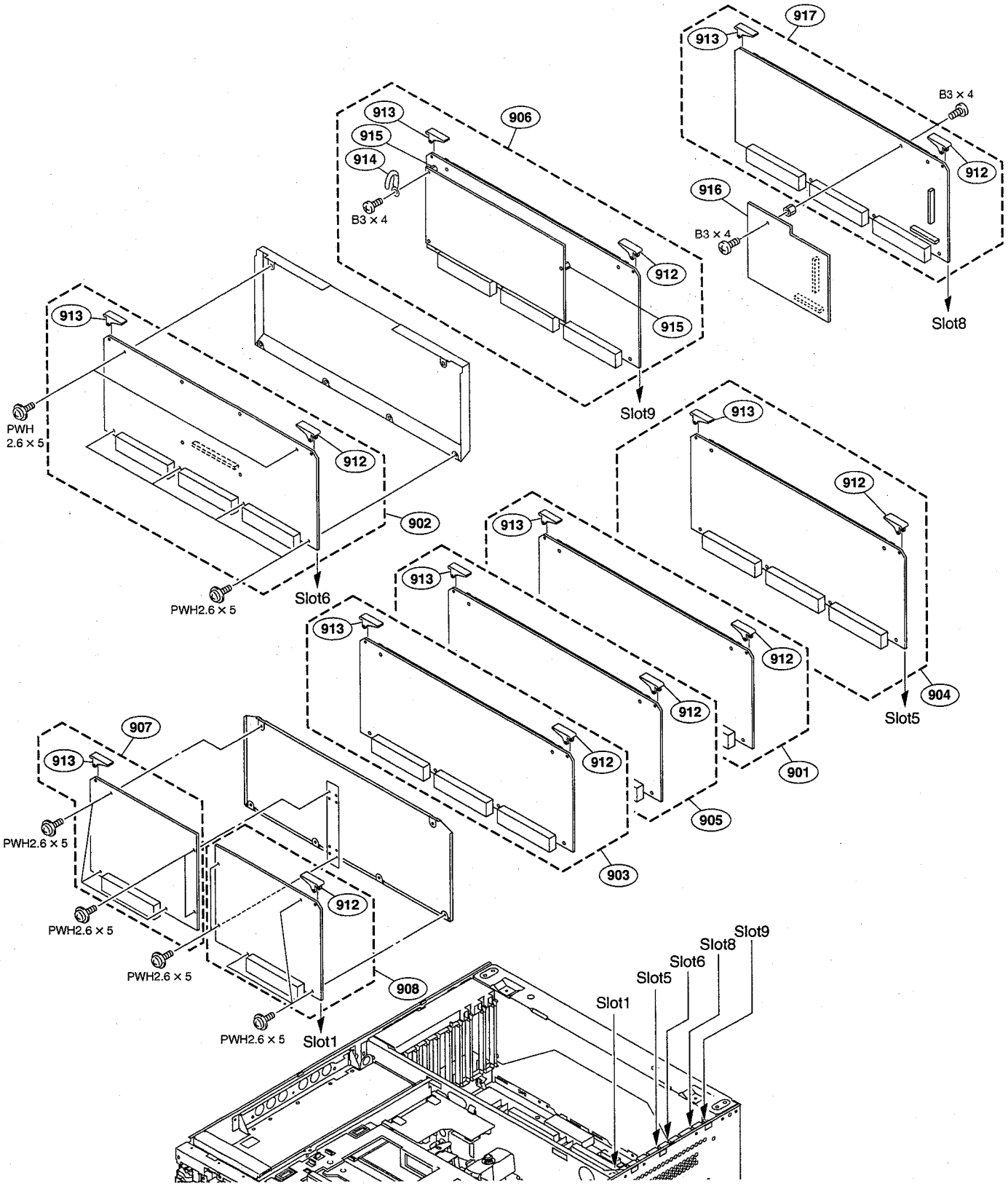

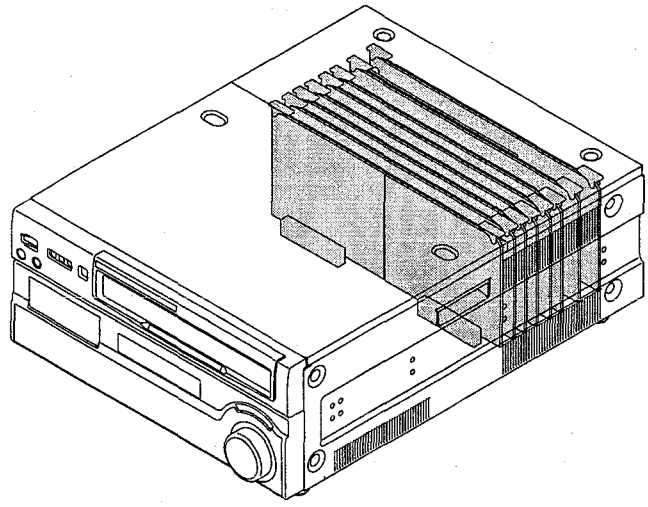

No.	Part No.	SP	Description
901	A-8324-843-C	s	MOUNTED CIRCUIT BOARD, DM-123 (MSW-A2000, MSW-M2000/M2000E/M2100/M2100E)
	A-8324-916-C	s	MOUNTED CIRCUIT BOARD, DM-123P (MSW-A2000P, MSW-M2000P/M2000EP/M2100P/M2100EP)
902	A-8345-214-C	s	MOUNTED CIRCUIT BOARD, EPR-1B (MSW-A Series, MSW-M2000/M2000E/M2000P/M2000EP)
	A-8345-216-C	s	MOUNTED CIRCUIT BOARD, EPR-1BA (MSW-M2100/M2100E/M2100P/M2100EP)
903	A-8324-858-C	s	MOUNTED CIRCUIT BOARD, APR-52 (MSW-2000, MSW-A Series, MSW-M2000/M2000P)
	A-8327-123-C	s	MOUNTED CIRCUIT BOARD, APR-52A (MSW-M2100/M2100P)
904	A-8346-095-A	s	MOUNTED CIRCUIT BOARD, DPR-229 (MSW-A Series)
	A-8346-097-A	s	MOUNTED CIRCUIT BOARD, DPR-229M (MSW-M Series)
	A-1119-167-A	s	MOUNTED CIRCUIT BOARD, DPR-229C (MSW-2000)
	A-8345-580-A	S	MOUNTED CIRCUIT BOARD, DPR-155C (MSW-2000)
905	A-8324-880-D	o	MOUNTED CIRCUIT BOARD, SS-89
906	A-8324-882-D	o	MOUNTED CIRCUIT BOARD, VPR-64 (MSW-2000, MSW-A Series, MSW-M2000/M2000E/M2000P/M2000EP)
	A-8327-279-D	s	MOUNTED CIRCUIT BOARD, VPR-64A (MSW-M2100/M2100E/M2100P/M2100EP)
907	A-8324-886-B	s	MOUNTED CIRCUIT BOARD, AU-272 (MSW-A Series, MSW-M Series)
	A-8327-367-A	s	MOUNTED CIRCUIT BOARD, DU-134 (MSW-2000)
908	A-8324-888-C	s	MOUNTED CIRCUIT BOARD, EQ-84 (MSW-A Series, MSW-M2000/M2000E/M2000P/M2000EP)
	A-8327-281-C	s	MOUNTED CIRCUIT BOARD, EQ-84A (MSW-M2100/M2100E/M2100P/M2100EP)
	A-8327-515-C	s	MOUNTED CIRCUIT BOARD, EQ-84H (MSW-2000)
912	3-179-084-11	s	LEVER(R),PRINTED C.BOARD
913	3-179-085-11	s	LEVER(L),PRINTED C.BOARD
914	3-701-822-01	s	HOLDER, WIRE
915	3-191-747-11	o	SUPPORT (M3), HEXAGON
916	A-1070-138-A	s	MOUNTED CIRCUIT BOARD, DSP-109 (MSW-M2000E/M2000EP/M2100E/M2100EP)
917	A-8345-968-C	s	MOUNTED CIRCUIT BOARD, VN-13 (MSW-M2000E/M2000EP/M2100E/M2100EP)

Screws

Part No.	SP	Description
7-682-545-04	s	SCREW +B3X4
7-682-902-11	s	SCREW +PWH 2.6X5

Plug-in Board Block (MSW Series Option)

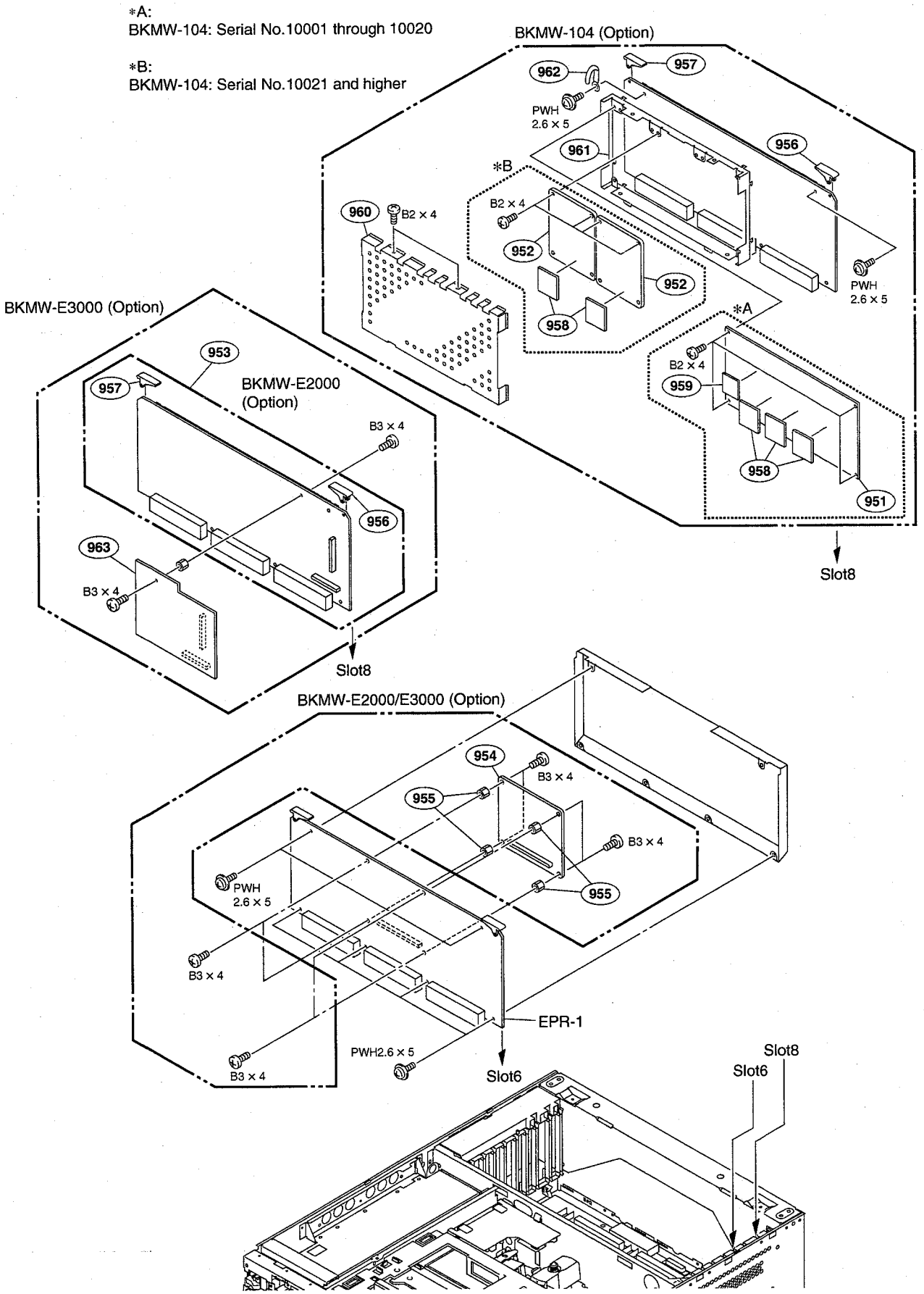

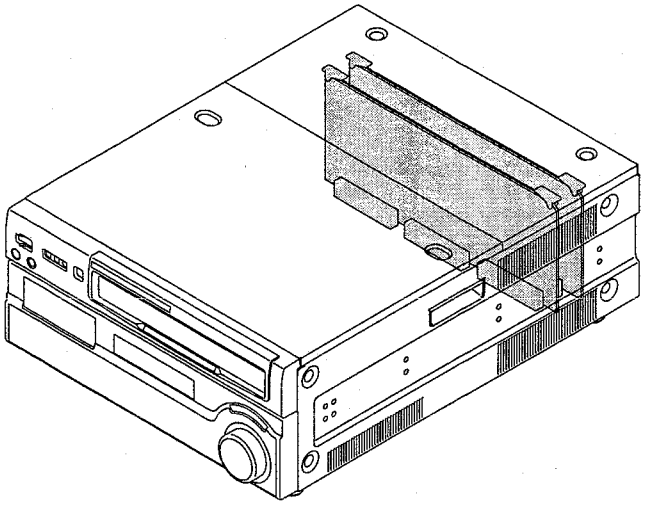

No.	Part No.	SP	Description
951	A-8327-117-A	o	MOUNTED CIRCUIT BOARD, SDI-63A (BKMW-104)
952	A-8345-816-B	s	MOUNTED CIRCUIT BOARD, TX-96 (BKMW-104)
953	A-8345-968-C	s	MOUNTED CIRCUIT BOARD, VN-13 (BKMW-E3000)
	A-8345-968-B	s	MOUNTED CIRCUIT BOARD, VN-13 (BKMW-E2000)
954	A-8345-971-A	s	MOUNTED CIRCUIT BOARD, IF-886 (BKMW-E2000/E3000)
955	2-280-622-01	o	SUPPORT (M3), HEXAGON
956	3-179-084-11	s	LEVER(R),PRINTED C.BOARD (BLACK)
	3-179-084-21	s	LEVER(R),PRINTED C.BOARD (BLUE)
957	3-179-085-11	s	LEVER(L),PRINTED C.BOARD (BLACK)
	3-179-085-21	s	LEVER(L),PRINTED C.BOARD (BLUE)
958	3-192-294-21	o	SHEET (SDI) RADITATION
959	3-192-294-32	o	SHEET (SDI) RADITATION
960	3-629-706-03	o	COVER, SHIELD HIF
961	3-629-707-02	o	CASE, SHIELD HIF
962	3-701-822-00	s	HOLDER, WIRE
963	A-1070-138-A	s	MOUNTED CIRCUIT BOARD, DSP-109

Screws

Part No.	SP	Description
7-621-772-18	s	SCREW +B M2X4
7-682-545-04	s	SCREW +B3X4
7-682-902-11	s	SCREW +PWH 2.6X5

Connector Panel Block and AC Panel Block (MSW Series)

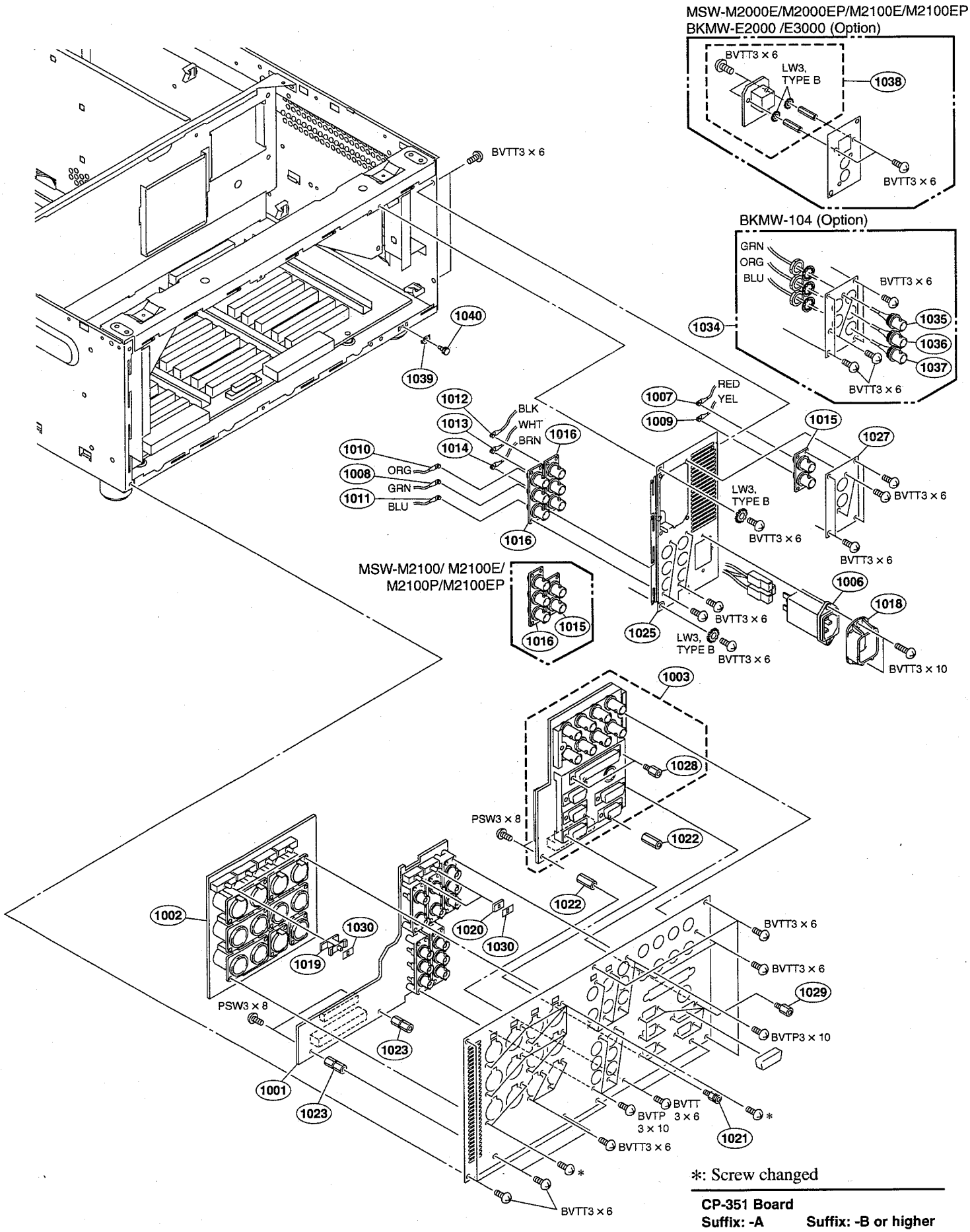

*: Screw changed

CP-351 Board	
Suffix: -A	Suffix: -B or higher
BVTT3 × 6 →	BVTP3 × 10

No.	Part No.	SP	Description
1001	A-8324-860-A	o	MOUNTED CIRCUIT BOARD, CP-350 (for Recorder)
	A-8327-240-A	o	MOUNTED CIRCUIT BOARD, CP-350A (for Player)
1002	A-8324-862-B	s	MOUNTED CIRCUIT BOARD, CP-351 (MSW-A2000(SY)/A2000P)
	A-8325-089-B	s	MOUNTED CIRCUIT BOARD, CP-351J (MSW-A2000(J))
	A-8327-676-B	s	MOUNTED CIRCUIT BOARD, CP-351B (MSW-M2000(SY)/M2000E(SY)/M2000P/M2000EP)
	A-8327-678-B	s	MOUNTED CIRCUIT BOARD, CP-351BJ (MSW-M2000(J)/M2000E(J))
	A-8327-242-B	s	MOUNTED CIRCUIT BOARD, CP-351C (MSW-2000)
	A-8327-246-B	s	MOUNTED CIRCUIT BOARD, CP-351D (MSW-M2100(SY)/M2100E(SY)/M2100P/M2100EP)
	A-8327-248-B	s	MOUNTED CIRCUIT BOARD, CP-351DJ (MSW-M2100(J)/M2100E(J))
1003	A-8329-128-A	s	MOUNTED CIRCUIT BOARD, CP-371 (for Recorder)
	A-8329-644-A	s	MOUNTED CIRCUIT BOARD, CP-371A (for Player)
1006 ⚠	1-251-378-12	s	INLET (WITH NOISE FILTER)
1007	1-790-085-11	s	CABLE ASSEMBLY, COAXIAL (for Recorder)
1008	1-791-718-12	o	CABLE ASSEMBLY, COAXIAL
1009	1-792-476-12	o	CABLE ASSEMBLY, COAXIAL (for Recorder)
1010	1-792-477-12	o	CABLE ASSEMBLY, COAXIAL
1011	1-792-478-12	o	CABLE ASSEMBLY, COAXIAL
1012	1-792-480-12	o	CABLE ASSEMBLY, COAXIAL (for Recorder)
1013	1-792-481-12	o	CABLE ASSEMBLY, COAXIAL
1014	1-792-482-12	o	CABLE ASSEMBLY, COAXIAL
1015	1-794-230-12	s	CONVERTER, COAXIAL CONNECTOR
1016	1-794-231-12	s	CONVERTER, COAXIAL CONNECTOR
1018	2-990-241-02	s	HOLDER (A), PLUG
1019	3-171-450-01	o	ADAPTOR, SW (for Recorder)
1020	3-173-384-01	o	SPACER, ORNAMENTAL PLATE
1021	3-690-726-01	s	SCREW,CONNECTOR
1022	3-625-714-03	o	SUPPORT,HEXAGON(1)
1023	3-625-715-03	o	SUPPORT,HEXAGON(2)
1025	3-625-717-05	o	AC BRACKET (for Recorder)
	3-629-693-04	o	BRACKET (P), AC (for Player)
1027	3-625-755-06	o	PANEL(SD),SDI (for Recorder)
	3-631-606-02	o	PANEL (SDI), BLANK (for Player)
1028	3-673-910-01	o	SCREW, CONNECTOR
1029	3-690-727-01	s	SCREW, CONNECTOR
1030	3-717-394-04	o	PLATE (SMALL), ORNAMENTAL, SW
1034	A-8314-526-A	s	PANEL ASSY, SDI/HD SDI (for BKMW-104)
1035	1-757-487-11	o	CABLE ASSEMBLY, COAXIAL
1036	1-757-488-11	o	CABLE ASSEMBLY, COAXIAL
1037	1-757-489-11	o	CABLE ASSEMBLY, COAXIAL
1038	A-8346-062-A	s	IF-885 ASSEMBLY
1039	2-068-008-00	s	WASHER
1040	X-2068-004-0	s	TERMINAL ASSEMBLY

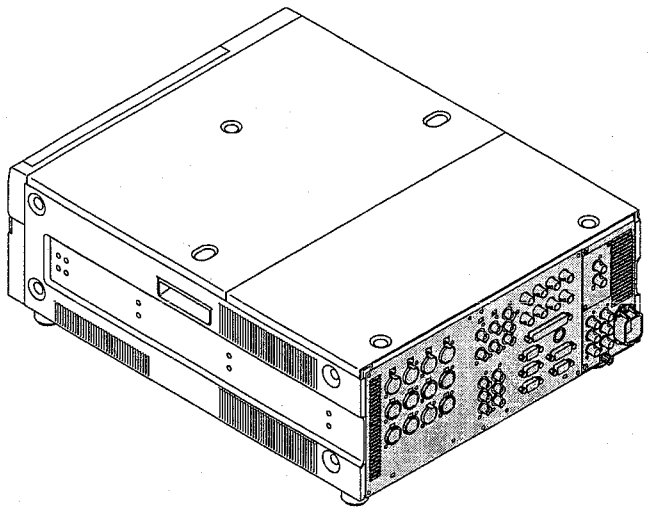

Screws/Washer

Part No.	SP	Description
7-623-422-07	s	WASHER LW 3 (TYPE 3)
7-682-948-01	s	SCREW +PSW 3X8
7-685-646-79	s	SCREW +BVTP 3X8
7-685-647-79	s	SCREW +BVTP 3X10
7-685-871-01	s	SCREW BVTT 3X6
7-685-871-09	s	SCREW,+BVTT 3X6 (S)
7-685-873-09	s	SCREW,+BVTT 3X10

Control Panel Block (MSW Series)

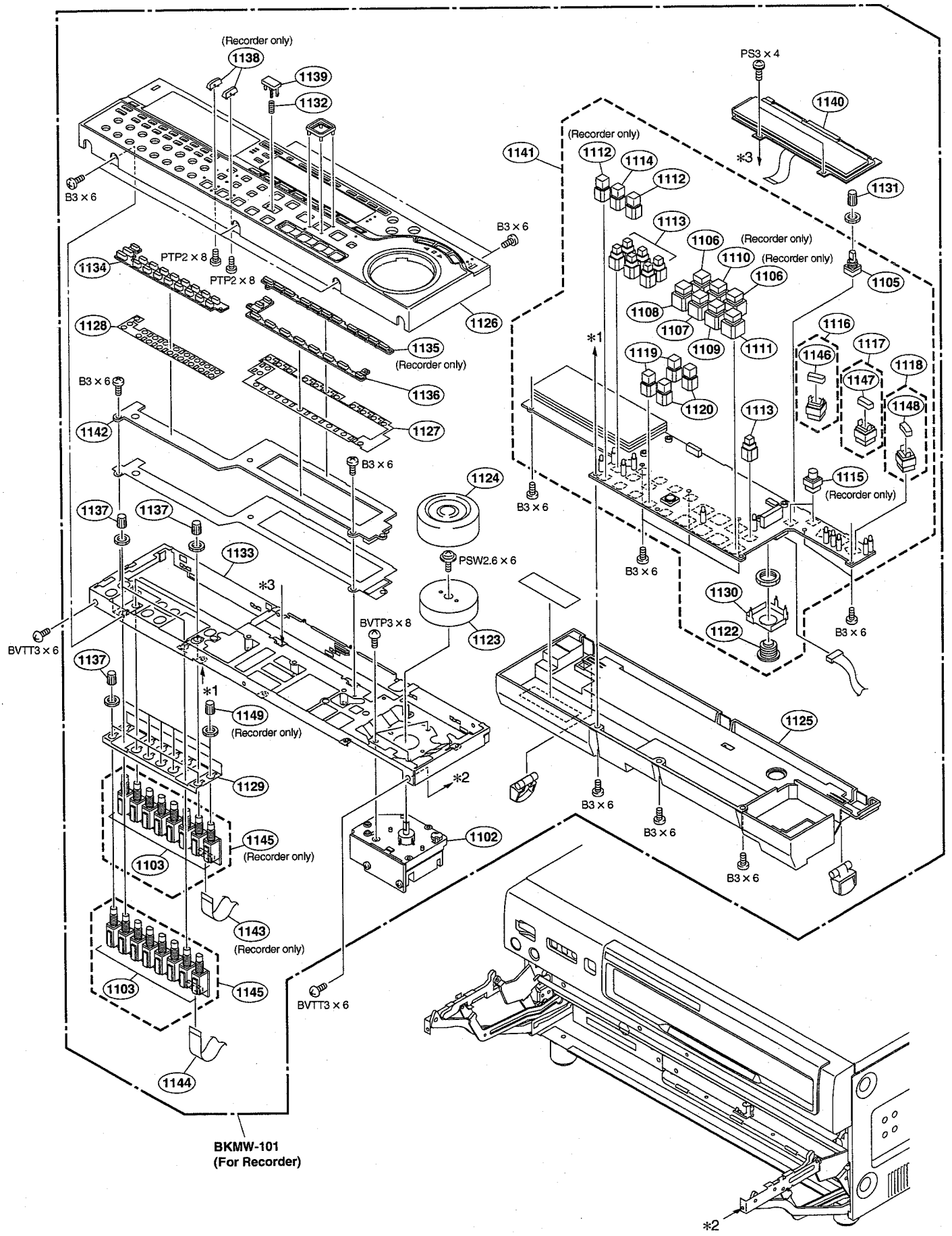

No.	Part No.	SP	Description
1102	A-8325-080-C	s	DIAL ASSY
1103	1-225-565-11	s	RES, VAR, CORBON (WITH SW) 5K
1104	1-469-778-11	o	CLAMP, FERRITE
1105	1-476-345-11	o	ENCODER, ROTARY
1106	1-692-890-11	o	SWITCH, TACTILE
1107	1-692-890-21	o	SWITCH, TACTILE (WITH LIGHT)
1108	1-692-890-31	o	SWITCH, TACTILE (WITH LIGHT)
1109	1-692-890-41	o	SWITCH, TACTILE (WITH LIGHT)
1110	1-692-891-21	o	SWITCH, TACTILE (WITH LIGHT) (for Recorder)
1111	1-692-892-21	o	SWITCH, TACTILE (WITH LIGHT)
1112	1-692-994-11	o	SWITCH, TACTILE (ILLUMINATED)
1113	1-762-042-11	o	SWITCH, TACTILE (ILLUMINATED)
1114	1-762-132-11	o	SWITCH, TACTILE (WITH LIGHT) (for Recorder)
1115	1-786-003-11	o	SWITCH, TACTILE (for Recorder)
1116	1-786-004-12	o	SWITCH, TACTILE
1117	1-786-005-12	o	SWITCH, TACTILE
1118	1-786-006-12	o	SWITCH, TACTILE
1119	1-786-010-11	o	SWITCH, TACTILE (ILLUMINATED)
1120	1-786-011-11	o	SWITCH, TACTILE (ILLUMINATED)
1121	1-792-418-12	s	CORD, CONNECTION
1122	1-794-229-11	s	CONNECTOR, ROUND TYPE (RECEPTACLE)
1123	3-180-632-02	o	KNOB, DIAL
1124	3-180-633-04	s	RUBBER, DIAL KNOB
1125	3-204-469-01	s	CASE, KY BACK
1126	3-204-470-01	s	PANEL, CONTROL (for Recorder)
	3-205-529-01	s	PANEL, CONTROL (for Player)
1127	3-204-478-01	s	SHEET (A), DOME
1128	3-204-479-01	s	SHEET (B), DOME
1129	3-204-533-01	o	PLATE, VR
1130	3-204-579-01	o	FRAME (CN)
1131	3-205-513-01	s	KNOB,MC
1132	3-611-769-01	o	SPRING COMPRESSION
1133	2-177-415-01	o	KY CHASSIS, 2
1134	3-205-389-01	s	KEY TOP (MO3) (for Player)
	3-625-733-01	s	KEY TOP (MO) (for Recorder)
1135	3-625-734-01	s	KEY TOP (ED) (for Recorder)
1136	3-625-735-01	s	KEY TOP (FN)
1137	3-205-863-01	s	KNOB,AU (White)
1138	3-689-866-41	s	GUARD,REC
1139	3-615-810-02	o	TOP, KEY 9X16
1140	9-885-011-09	o	FIELD EMISSION DISPLAY UNIT(KY-464)
	9-885-061-91	o	FIELD EMISSION DISPLAY UNIT(KY-569)

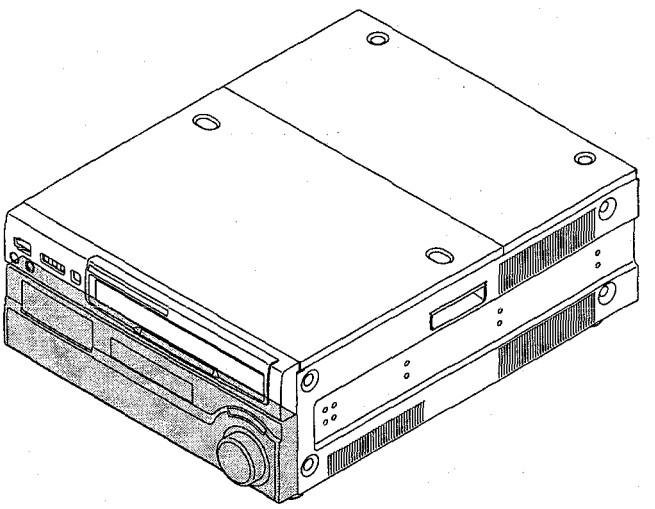

No.	Part No.	SP	Description
1141	9-885-020-33	s	MOUNTED CIRCUIT BOARD, KY-464 (MBJ834) (for Recorder)
	9-885-065-12	s	MOUNTED CIRCUIT BOARD, KY-569 (MBJ907BA) (for Recorder)
	9-885-020-36	s	MOUNTED CIRCUIT BOARD, KY-464 (MBJ834) (for Player)
	9-885-065-14	s	MOUNTED CIRCUIT BOARD, KY-569 (MBJ907BD) (for Player)
1142	9-885-011-08	o	MOUNTED CIRCUIT BOARD, KY-465 (AC013AA) (for Recorder)
	9-885-065-15	s	MOUNTED CIRCUIT BOARD, KY-570 (AC027AA) (for Recorder)
	9-885-012-38	o	MOUNTED CIRCUIT BOARD, KY-465 (AC013AA) (for Player)
	9-885-065-17	s	MOUNTED CIRCUIT BOARD, KY-570 (AC027AC) (for Player)
1143	9-885-011-11	o	CABLE, FLAT (for Recorder)
1144	9-885-011-12	o	CABLE, FLAT
1145	9-885-012-31	o	MOUNTED CIRCUIT BOARD, VR-262(KY-464) (AC014AA)
	9-885-065-19	s	MOUNTED CIRCUIT BOARD, VR-300(KY-569) (1P50A973-01)
1146	3-205-563-01	s	KEY TOP
1147	3-205-564-01	s	KEY TOP
1148	3-205-565-01	s	KEY TOP
1149	3-205-863-11	s	KNOB, AU (Red) (for Recorder)

Screws

Part No.	SP	Description
7-621-759-40	s	SCREW +PSW 2.6X6
7-682-547-09	s	SCREW +B3X6
7-682-645-01	s	SCREW +PS 3X4
7-685-105-19	s	SCREW +PTP 2X8
7-685-646-79	s	SCREW +BVTP 3X8

Plug-in Board Block (HDW Series)

*A:
HDW-2000(SY)/M2000(SY)/M2100(SY): Serial No.15001 through 16000
HDW-2000(J)/A2100/M2000(J)/M2100(J): Serial No.35001 through 36000
HDW-M2000P/M2100P: Serial No.45001 through 46000

*B:
HDW-2000(SY)/D2000/M2000(SY)/M2100(SY)/S2000(SY): Serial No.16001 and higher
HDW-2000(J)/A2100/M2000(J)/M2100(J)/S2000(J): Serial No.36001 and higher
HDW-M2000P/M2100P/S2000P: Serial No.46001 and higher

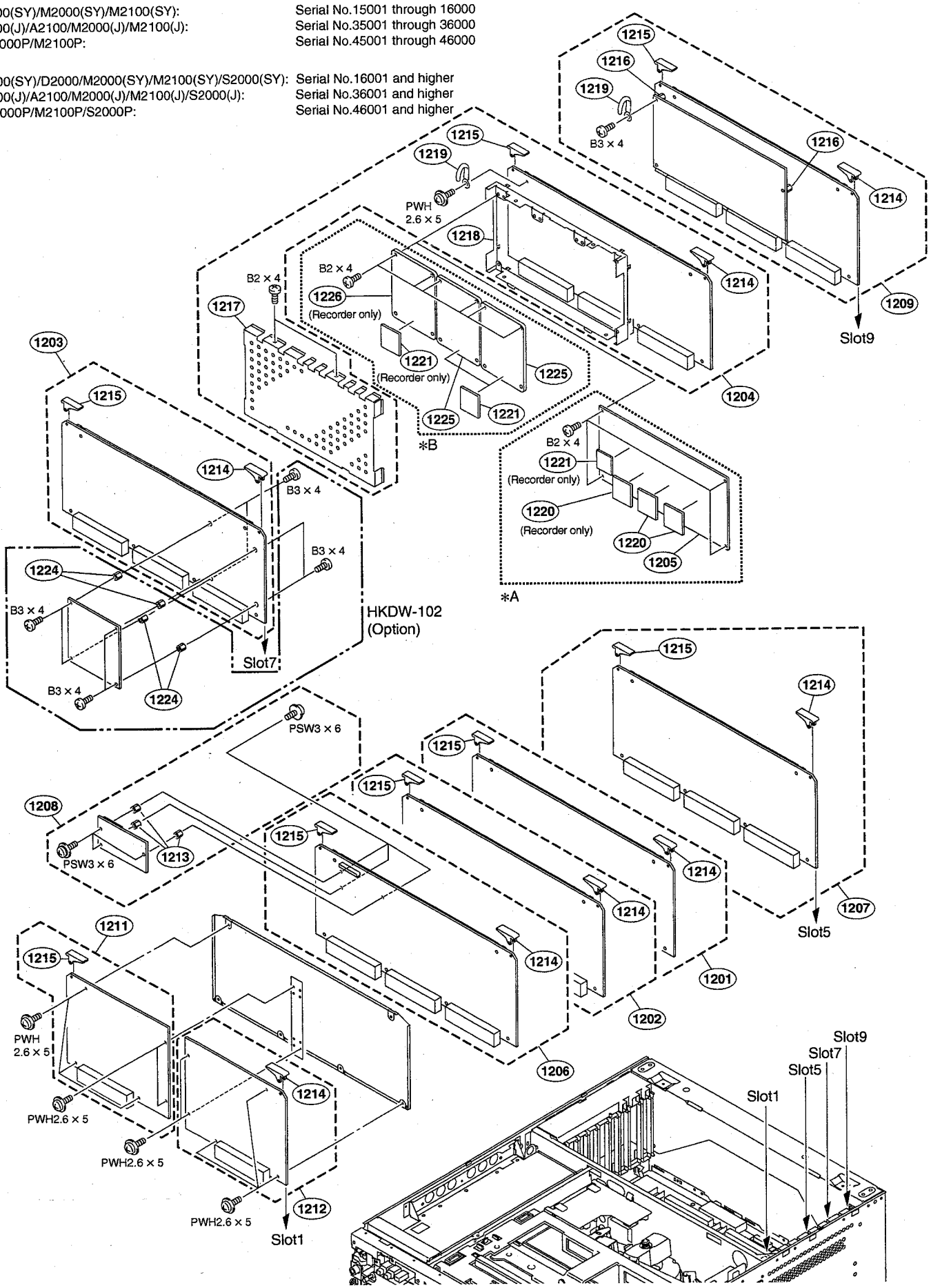

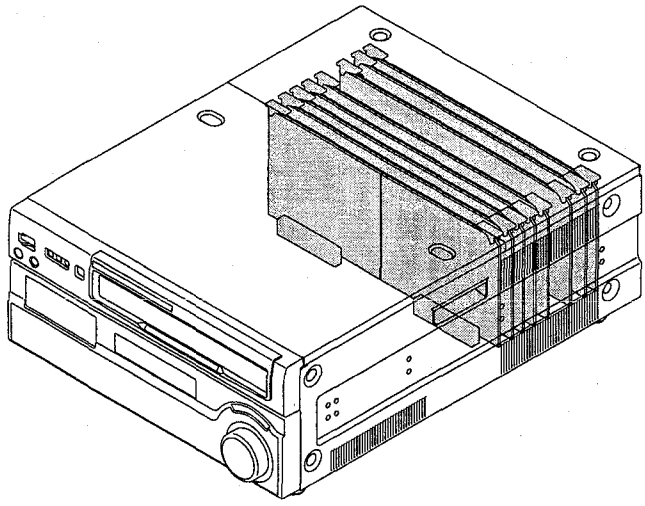

No.	Part No.	SP	Description
1201	A-8324-843-C	s	MOUNTED CIRCUIT BOARD, DM-123 (HDW-A2100/M2000/M2100/S2000)
	A-8324-916-C	s	MOUNTED CIRCUIT BOARD, DM-123P (HDW-M2000P/M2100P/S2000P)
1202	A-8324-880-D	s	MOUNTED CIRCUIT BOARD, SS-89
1203	A-8327-038-B	s	MOUNTED CIRCUIT BOARD, HPR-1 (for Recorder)
	A-8327-119-B	s	MOUNTED CIRCUIT BOARD, HPR-1A (for Player)
1204	A-8327-055-D	s	MOUNTED CIRCUIT BOARD, HIF-1 (for Recorder)
	A-8327-115-D	s	MOUNTED CIRCUIT BOARD, HIF-1A (for Player)
1205	A-8327-057-A	o	MOUNTED CIRCUIT BOARD, SDI-63 (for Recorder)
	A-8327-117-A	o	MOUNTED CIRCUIT BOARD, SDI-63A (for Player)
1206	A-8324-858-C	s	MOUNTED CIRCUIT BOARD, APR-52 (for Recorder)
	A-8327-123-C	s	MOUNTED CIRCUIT BOARD, APR-52A (for Player)
1207	A-8346-099-A	s	MOUNTED CIRCUIT BOARD, DPR-229H (HDW-2000/A2100)
	A-1090-695-A	s	MOUNTED CIRCUIT BOARD, DPR-229HD (HDW-D2000)
	A-8346-101-A	s	MOUNTED CIRCUIT BOARD, DPR-229HM (HDW-M Series)
	A-1061-234-A	s	MOUNTED CIRCUIT BOARD, DPR-229HS (HDW-S Series)
1208	A-8344-020-A	s	MOUNTED CIRCUIT BOARD, RC-89H
1209	A-8327-279-D	s	MOUNTED CIRCUIT BOARD, VPR-64A
1211	A-8324-886-B	s	MOUNTED CIRCUIT BOARD, AU-272 (HDW-A2100, HDW-M Series)
	A-8327-367-A	s	MOUNTED CIRCUIT BOARD, DU-134 (HDW-2000/D2000)
	A-1061-236-A	s	MOUNTED CIRCUIT BOARD, AU-272HS (HDW-S Series)
1212	A-8327-515-C	s	MOUNTED CIRCUIT BOARD, EQ-84H (for Recorder)
	A-8327-517-C	s	MOUNTED CIRCUIT BOARD, EQ-84AH (for Player)
1213	2-280-622-11	o	SUPPORT (M3),HEXAGON
1214	3-179-084-11	s	LEVER(R),PRINTED C.BOARD (BLACK)
	3-179-084-21	s	LEVER(R),PRINTED C.BOARD (BLUE)
1215	3-179-085-11	s	LEVER(L),PRINTED C.BOARD (BLACK)
	3-179-085-21	s	LEVER(L),PRINTED C.BOARD (BLUE)
1216	3-191-747-21	o	SUPPORT (M3),HEXAGON
1217	3-629-706-03	o	COVER, SHIELD HIF
1218	3-629-707-02	o	CASE, SHIELD HIF
1219	3-701-822-00	s	HOLDER, WIRE
1220	3-192-294-21	o	SHEET (SDI) RADIATATION
1221	3-192-294-32	o	SHEET (SDI) RADIATATION (for Recorder)
1224	2-280-622-21	o	SUPPORT (M3),HEXAGON (10 mm)
1225	A-8345-816-B	s	MOUNTED CIRCUIT BOARD, TX-96
1226	A-8345-817-A	s	MOUNTED CIRCUIT BOARD, RX-80 (for Recorder)

Screws

Part No.	SP	Description
7-682-545-04	s	SCREW +B3X4
7-682-902-11	s	SCREW +PWH 2.6X5
7-682-947-01	s	SCREW +PSW 3X6
7-621-772-18	s	SCREW +B M2X4

Connector Panel Block and AC Panel Block (HDW Series)

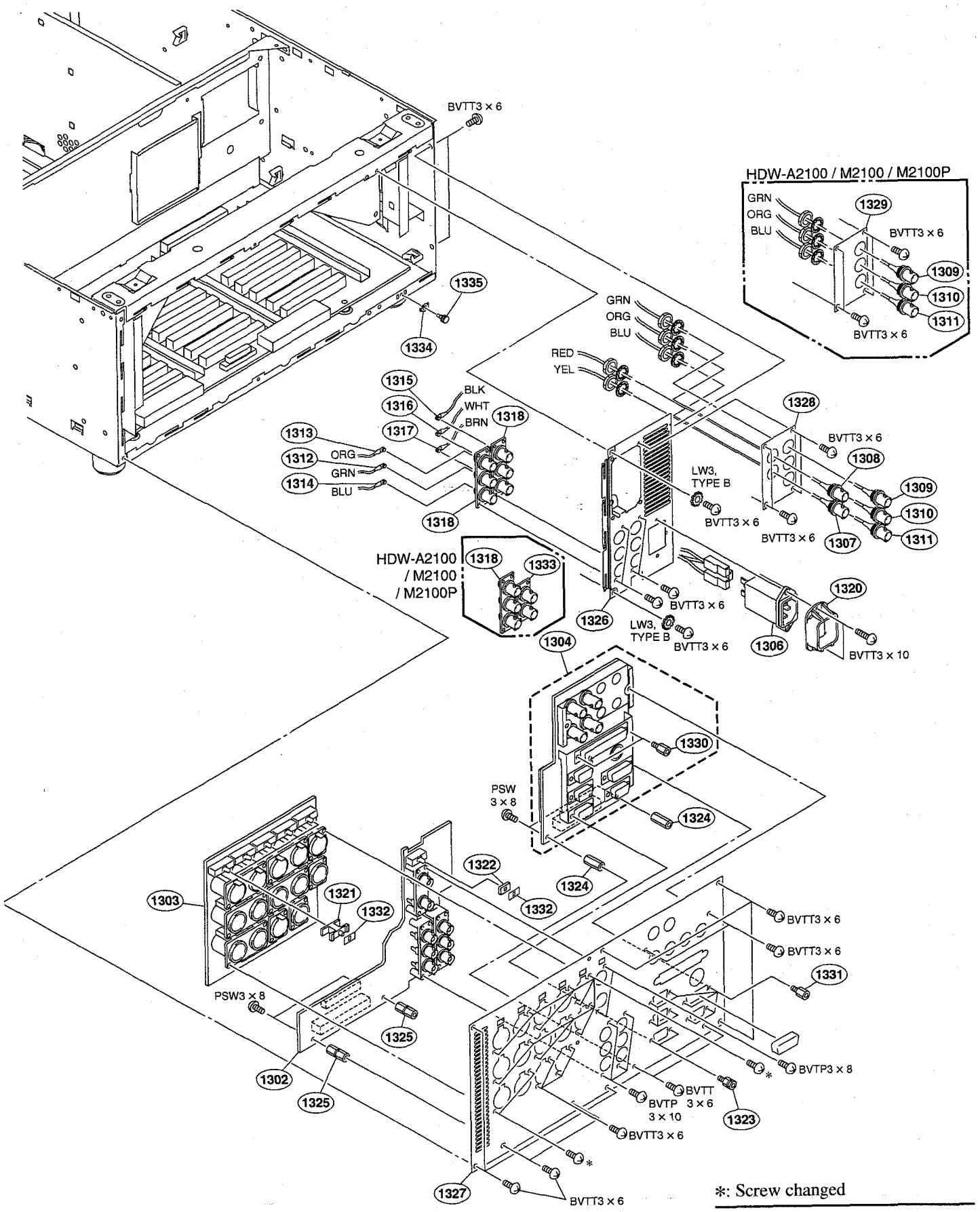

*: Screw changed

CP-351 Board	
Suffix: -A	Suffix: -B or higher
BVTT3 × 6 →	BVTP3 × 10

No. Part No. SP Description

1302 A-8327-240-A o MOUNTED CIRCUIT BOARD, CP-350A
1303 A-8327-242-B s MOUNTED CIRCUIT BOARD, CP-351C
(HDW-2000(SY)/D2000/M2000(SY)/M2000P/S2000(SY)/S2000P)
A-8327-244-B s MOUNTED CIRCUIT BOARD, CP-351CJ
(HDW-2000(J)/M2000(J)/S2000(J))
A-8327-246-B s MOUNTED CIRCUIT BOARD, CP-351D
(HDW-M2100(SY)/M2100P)
A-8327-248-B s MOUNTED CIRCUIT BOARD, CP-351DJ
(HDW-A2100(J)/M2100(J))

1304 A-8329-644-A s MOUNTED CIRCUIT BOARD, CP-371A
(HDW-M2100/M2100P)
A-8329-646-A s MOUNTED CIRCUIT BOARD, CP-371B
(HDW-2000/S2000/S2000P)
A-8329-648-A s MOUNTED CIRCUIT BOARD, CP-371C
(HDW-A2100(J))
A-8329-650-A s MOUNTED CIRCUIT BOARD, CP-371D
(HDW-D2000/M2000/M2000P)
1306 ⚠ 1-251-378-12 s INLET (WITH NOISE FILTER)
1307 1-757-485-11 o CABLE ASSEMBLY, COAXIAL
(for Recorder)

1308 1-757-486-11 o CABLE ASSEMBLY, COAXIAL
(for Recorder)
1309 1-757-487-11 o CABLE ASSEMBLY, COAXIAL
1310 1-757-488-11 o CABLE ASSEMBLY, COAXIAL
1311 1-757-489-11 o CABLE ASSEMBLY, COAXIAL
1312 1-791-718-12 o CABLE ASSEMBLY, COAXIAL

1313 1-792-477-12 o CABLE ASSEMBLY, COAXIAL
1314 1-792-478-12 o CABLE ASSEMBLY, COAXIAL
1315 1-792-480-12 o CABLE ASSEMBLY, COAXIAL
(for Recorder)
1316 1-792-481-12 o CABLE ASSEMBLY, COAXIAL
1317 1-792-482-12 o CABLE ASSEMBLY, COAXIAL

1318 1-794-231-12 s CONVERTER, COAXIAL CONNECTOR
1320 2-990-241-02 s HOLDER (A), PLUG
1321 3-171-450-01 o ADAPTOR, SW
1322 3-173-384-01 o SPACER, ORNAMENTAL PLATE
1323 3-690-726-01 s SCREW,CONNECTOR

1324 3-625-714-03 o SUPPORT,HEXAGON(1)
1325 3-625-715-03 o SUPPORT,HEXAGON(2)
1326 3-625-717-05 o AC BRACKET
(for Recorder)
3-629-693-04 o BRACKET (P), AC
(for Player)
1327 3-629-691-04 o PANEL (HD), CONNECTOR
(HDW-2000/S2000/S2000P)
3-629-692-04 o PANEL (HDP), CONNECTOR
(HDW-A2100)
3-639-788-03 o PANEL, CONNECTOR (HD/M/R)
(HDW-D2000/M2000/M2000P)
3-639-789-02 o PANEL, CONNECTOR (HD/M/P)
(HDW-M2100/M2100P)
1328 3-629-697-05 o PANEL, HDSDI
(for Recorder)

1329 3-629-698-05 o PANEL (P), HDSDI
(for Player)
1330 3-673-910-01 o SCREW, CONNECTOR
1331 3-690-727-01 s SCREW, CONNECTOR
1332 3-717-394-04 o PLATE (SMALL), ORNAMENTAL, SW
1333 1-794-230-12 o CONVERTER, COAXIAL CONNECTOR
(for Player)
1334 2-068-008-00 s WASHER
1335 X-2068-004-0 s TERMINAL ASSEMBLY

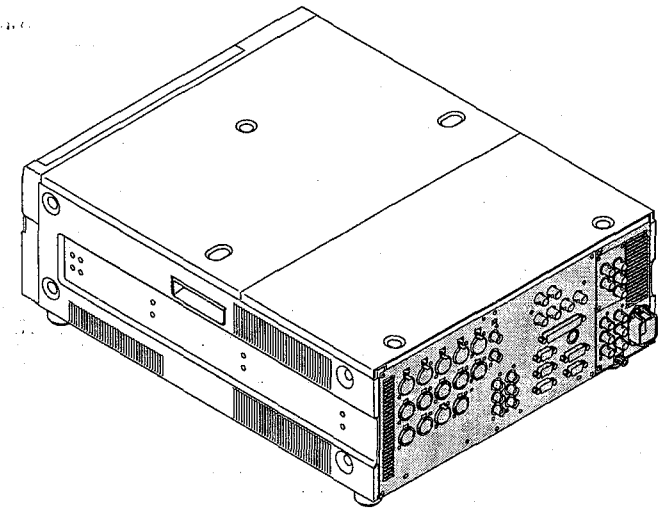

Screws/Washer

Part No. SP Description

7-623-422-07 s WASHER LW 3 (TYPE 3)
7-682-948-09 s SCREW +PSW 3X8
7-685-646-79 s SCREW +BVTP 3X8
7-685-647-79 s SCREW +BVTP 3X10
7-685-871-01 s SCREW BVTT 3X6

7-685-871-09 s SCREW,+BVTT 3X6 (S)
7-685-873-09 s SCREW,+BVTT 3X10

Control Panel Block (HDW Series)

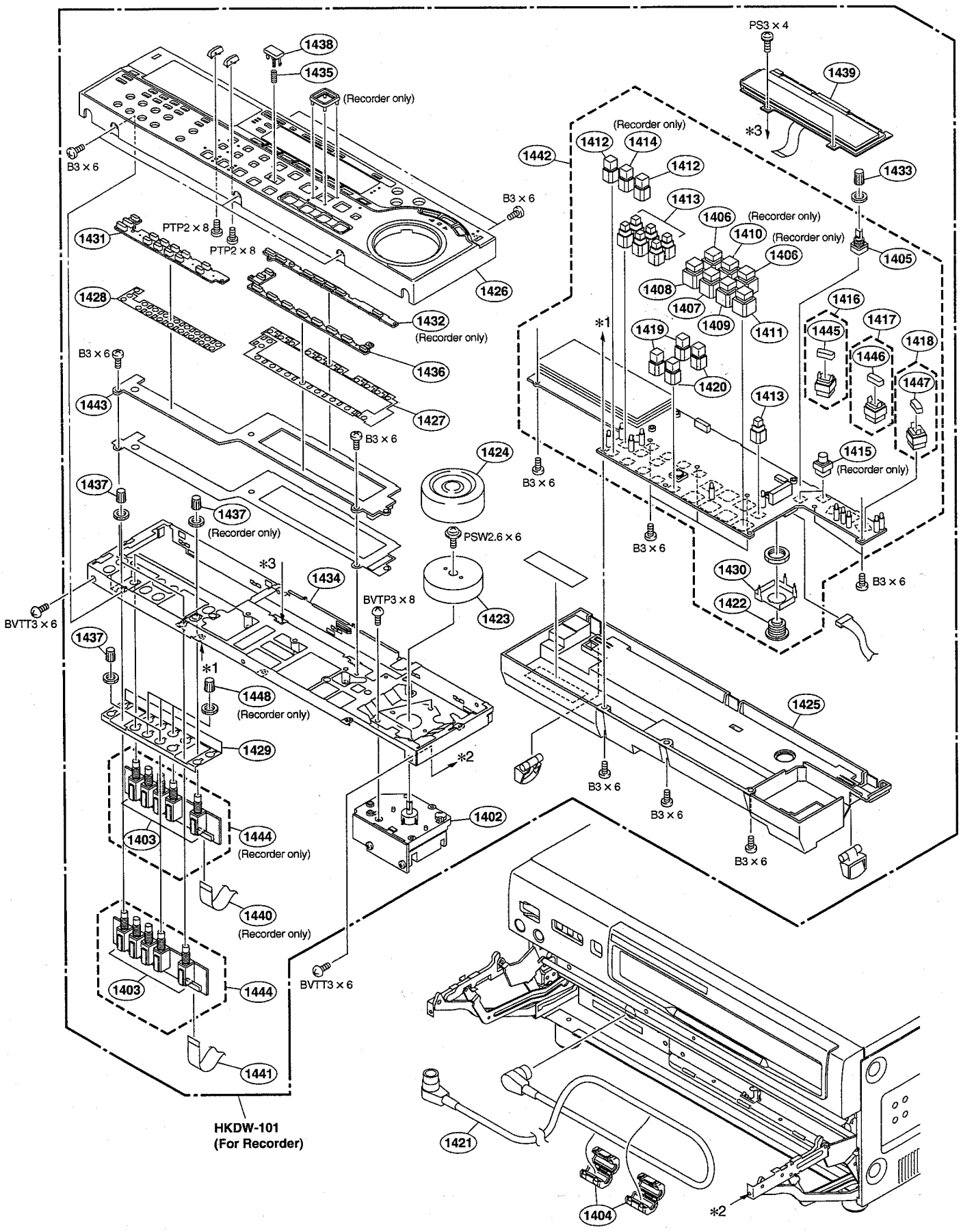

No.	Part No.	SP	Description
1402	A-8325-080-C	s	DIAL ASSY
1403	1-225-565-11	s	RES, VAR, CARBON (WITH SW) 5K
1404	1-469-778-11	o	CLAMP, FERRITE
1405	1-476-345-11	o	ENCODER, ROTARY
1406	1-692-890-11	o	SWITCH, TACTILE
1407	1-692-890-21	o	SWITCH, TACTILE (WITH LIGHT)
1408	1-692-890-31	o	SWITCH, TACTILE (WITH LIGHT)
1409	1-692-890-41	o	SWITCH, TACTILE (WITH LIGHT)
1410	1-692-891-21	o	SWITCH, TACTILE (WITH LIGHT) (for Recorder)
1411	1-692-892-21	o	SWITCH, TACTILE (WITH LIGHT)
1412	1-692-994-11	o	SWITCH, TACTILE (ILLUMINATED)
1413	1-762-042-11	o	SWITCH, TACTILE (ILLUMINATED)
1414	1-762-132-11	o	SWITCH, TACTILE (WITH LIGHT) (for Recorder)
1415	1-786-003-11	o	SWITCH, TACTILE (for Recorder)
1416	1-786-004-12	o	SWITCH, TACTILE
1417	1-786-005-12	o	SWITCH, TACTILE
1418	1-786-006-12	o	SWITCH, TACTILE
1419	1-786-010-11	o	SWITCH, TACTILE (ILLUMINATED)
1420	1-786-011-11	o	SWITCH, TACTILE (ILLUMINATED)
1421	1-792-418-12	s	CORD, CONNECTION
1422	1-794-229-11	s	CONNECTOR, ROUND TYPE (RECEPTACLE)
1423	3-180-632-02	o	KNOB, DIAL
1424	3-180-633-04	s	RUBBER, DIAL KNOB
1425	3-204-469-01	s	CASE, KY BACK
1426	3-205-045-01	s	(HD) CONTROL PANEL (HDW-2000/S2000/S2000P)
	3-205-046-01	s	(HD-P) CONTROL PANEL (HDW-A2100)
	3-205-047-02	s	(HD-M) CONTROL PANEL (HDW-D2000/M2000/M2000P)
	3-205-048-01	s	(HD-MP) CONTROL PANEL (HDW-M2100/M2100P)
1427	3-204-478-01	s	SHEET (A), DOME
1428	3-204-479-01	s	SHEET (B), DOME
1429	3-204-533-01	o	PLATE, VR
1430	3-204-579-01	o	FRAME (CN)
1431	3-205-390-01	s	KEY TOP (MO4) (for Player)
	3-205-391-01	s	KEY TOP (MO2) (for Recorder)
1432	3-205-393-01	s	KEY TOP (ED2) (for Recorder)
1433	3-205-513-01	s	KNOB,MC
1434	2-177-415-01	o	KY CHASSIS, 2
1435	3-611-769-01	o	SPRING COMPRESSION
1436	3-625-735-01	s	KEY TOP (FN)
1437	3-205-863-01	s	KNOB,AU
1438	3-615-810-02	o	TOP, KEY 9X6
1439	9-885-011-09	o	FIELD EMISSION DISPLAY UNIT(KY-464)
	9-885-061-91	o	FIELD EMISSION DISPLAY UNIT(KY-569)
1440	9-885-011-11	o	CABLE, FLAT (for Recorder)
1441	9-885-011-12	o	CABLE, FLAT

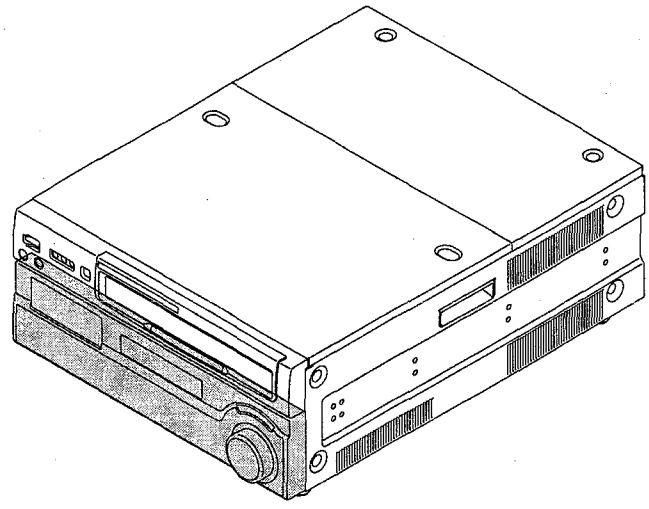

No.	Part No.	SP	Description
1442	9-885-020-34	s	MOUNTED CIRCUIT BOARD, KY-464 (MBJ834) (for Recorder)
	9-885-061-80	s	MOUNTED CIRCUIT BOARD, KY-569 (MBJ907BB) (for Recorder)
	9-885-020-35	s	MOUNTED CIRCUIT BOARD, KY-464 (MBJ834) (for Player)
1443	9-885-065-13	s	MOUNTED CIRCUIT BOARD, KY-569 (MBJ907BC) (for Player)
	9-885-012-33	o	MOUNTED CIRCUIT BOARD, KY-465 (AC013AA) (for Recorder)
	9-885-061-84	s	MOUNTED CIRCUIT BOARD, KY-570 (AC027AB) (for Recorder)
	9-885-012-36	o	MOUNTED CIRCUIT BOARD, KY-465 (AC013AA) (for Player)
	9-885-065-16	s	MOUNTED CIRCUIT BOARD, KY-570 (AC027AC) (for Player)
1444	9-885-012-34	o	MOUNTED CIRCUIT BOARD, VR-262(KY-464) (AC014AA)
	9-885-061-90	s	MOUNTED CIRCUIT BOARD, VR-300(KY-569) (1P50A973-02)
1445	3-205-563-01	s	KEY TOP
1446	3-205-564-01	s	KEY TOP
1447	3-205-565-01	s	KEY TOP
1448	3-205-863-11	s	KNOB, AU (for Recorder)

Screws

Part No.	SP	Description
7-621-759-40	s	SCREW +PSW 2.6X6
7-682-547-09	s	SCREW +B3X6
7-682-645-01	s	SCREW +PS 3X4
7-685-105-19	s	SCREW +PTP 2X8
7-685-646-79	s	SCREW +BVTP 3X8

Plug-in Board Block (DVW Series)

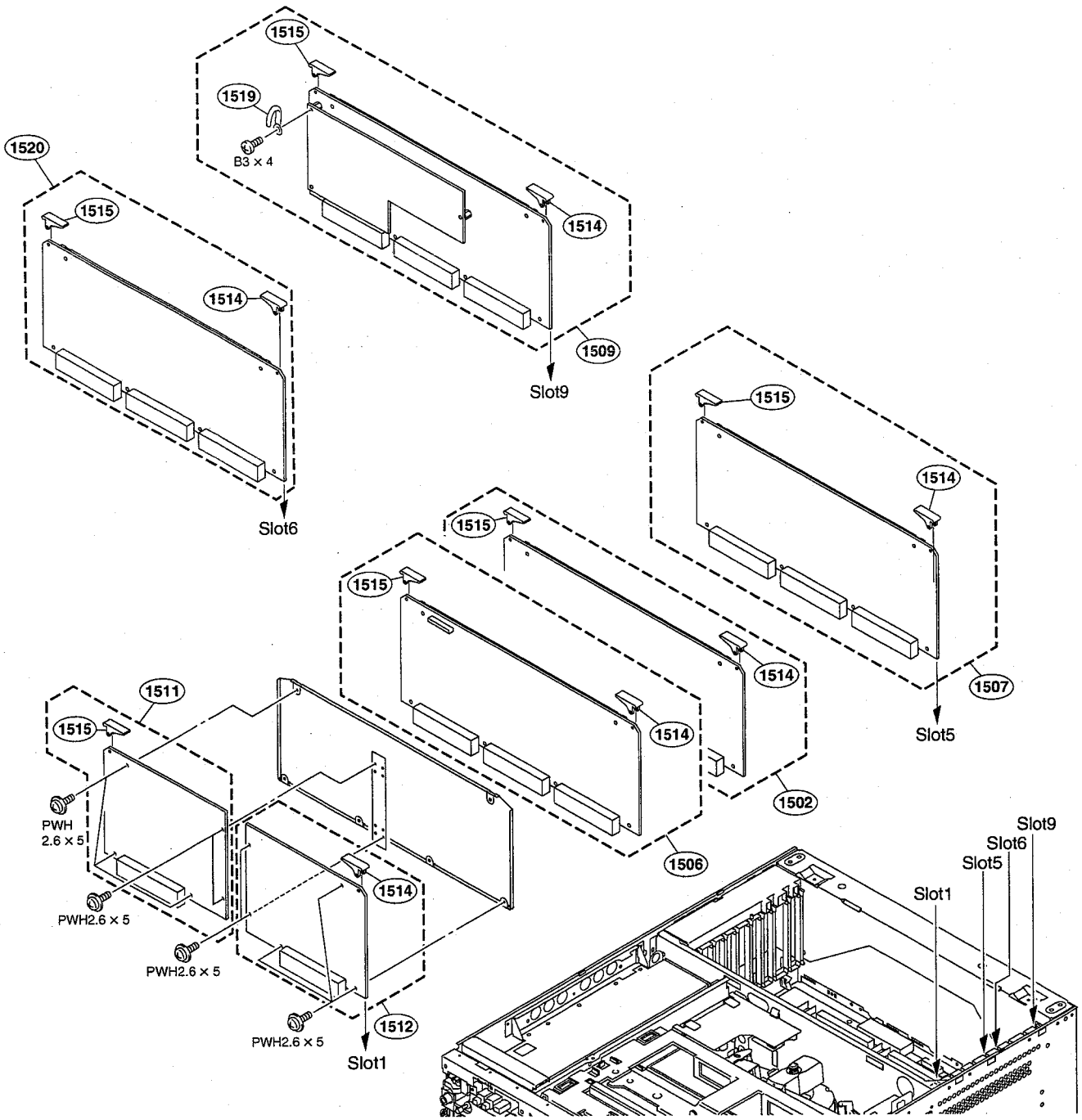

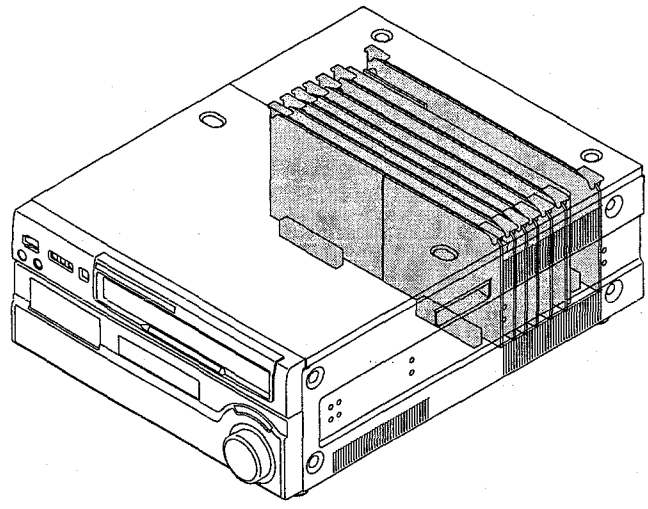

No.	Part No.	SP	Description
1501	A-8324-843-C	s	MOUNTED CIRCUIT BOARD, DM-123 (DVW-M2000)
	A-8324-916-C	s	MOUNTED CIRCUIT BOARD, DM-123P (DVW-M2000P)
1502	A-8324-880-D	s	MOUNTED CIRCUIT BOARD, SS-89
1506	A-8327-123-C	s	MOUNTED CIRCUIT BOARD, APR-52A
1507	A-1103-101-A	s	MOUNTED CIRCUIT BOARD, DPR-229DM (DVW-M2000/M2000P)
	A-8346-097-A	s	MOUNTED CIRCUIT BOARD, DPR-229M (DVW-M2000/M2000P)
	A-8347-76 5-A	s	MOUNTED CIRCUIT BOARD, DPR-229D (DVW-2000/2000P)
1509	A-8348-010-A	s	MOUNTED CIRCUIT BOARD, VPR-91
1511	A-8324-886-B	s	MOUNTED CIRCUIT BOARD, AU-272 (DVW-2000/2000P)
	A-8327-367-A	o	MOUNTED CIRCUIT BOARD, DU-134 (DVW-M2000/M2000P)
1512	A-8324-888-C	s	MOUNTED CIRCUIT BOARD, EQ-84
1514	3-179-084-11	s	LEVER(R),PRINTED C.BOARD (BLACK)
1515	3-179-085-11	s	LEVER(L),PRINTED C.BOARD (BLACK)
1519	3-701-822-01	s	HOLDER, WIRE
1520	A-8347-767-A	s	MOUNTED CIRCUIT BOARD, EPR-1C

Screws

Part No.	SP	Description
7-682-545-04	s	SCREW +B3X4
7-682-902-11	s	SCREW +PWH 2.6X5

Connector Panel Block and AC Panel Block (DVW Series)

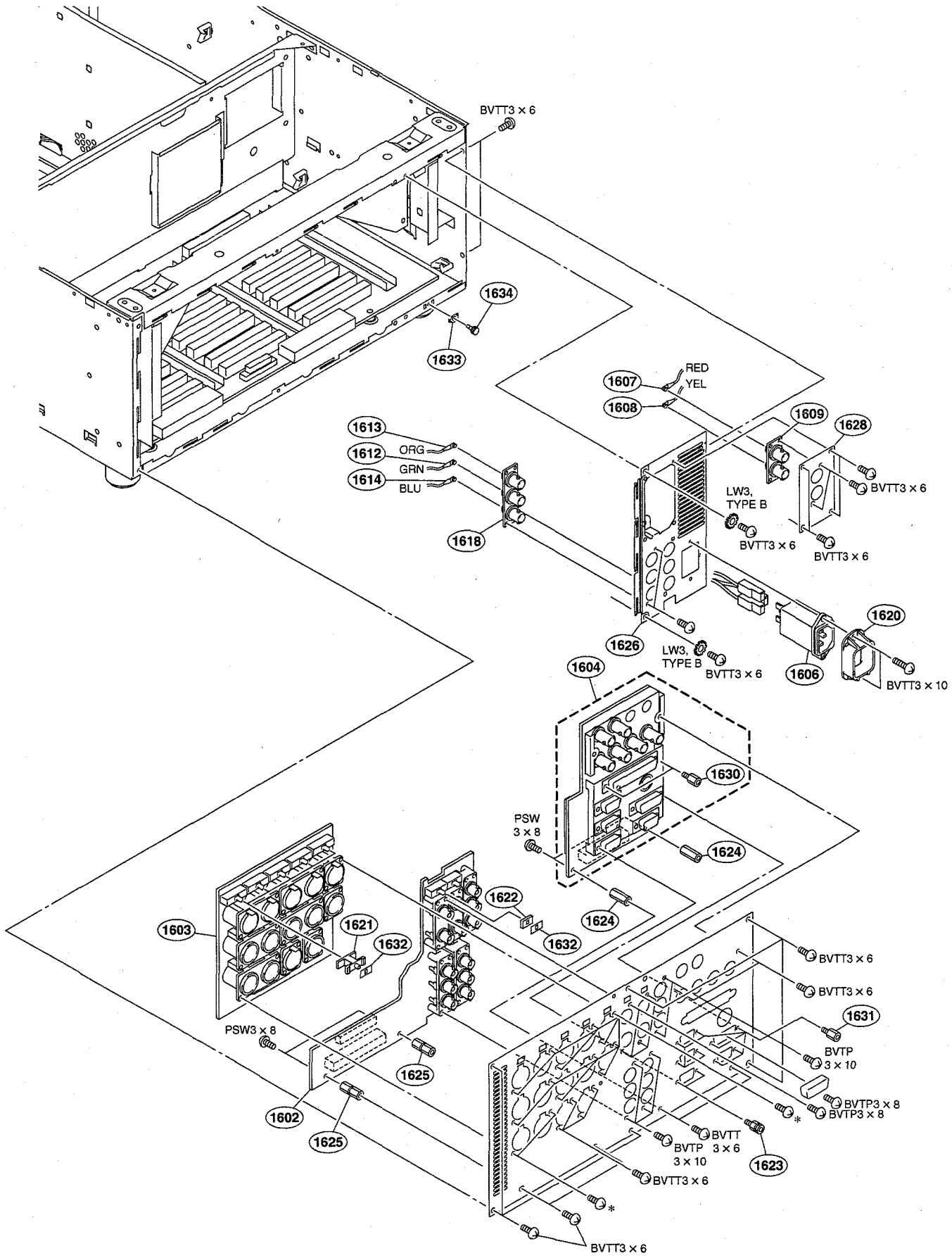

No.	Part No.	SP	Description
1602	A-8327-240-A	o	MOUNTED CIRCUIT BOARD, CP-350A
1603	A-8327-242-B	s	MOUNTED CIRCUIT BOARD, CP-351C
1604	A-8329-646-A	s	MOUNTED CIRCUIT BOARD, CP-371B (DVW-2000/2000P)
	A-8329-650-A	s	MOUNTED CIRCUIT BOARD, CP-371D (DVW-M2000/M2000P)
1606 ⚠	1-251-378-12	s	INLET (WITH NOISE FILTER)
1607	1-790-085-11	s	CABLE ASSEMBLY, COAXIAL
1608	1-792-418-12	s	CABLE ASSEMBLY, COAXIAL
1609	1-794-230-12	s	CONVERTER, COAXIAL CONNECTOR
1612	1-791-718-12	o	CABLE ASSEMBLY, COAXIAL
1613	1-792-477-12	o	CABLE ASSEMBLY, COAXIAL
1614	1-792-478-12	o	CABLE ASSEMBLY, COAXIAL
1618	1-794-231-12	s	CONVERTER, COAXIAL CONNECTOR
1620	2-990-241-02	s	HOLDER (A), PLUG
1621	3-171-450-01	o	ADAPTOR, SW
1622	3-173-384-01	o	SPACER, ORNAMENTAL PLATE
1623	3-690-726-01	s	SCREW,CONNECTOR
1624	3-625-714-03	o	SUPPORT,HEXAGON(1)
1625	3-625-715-03	o	SUPPORT,HEXAGON(2)
1626	3-853-647-01	s	AC BRACKET (DV)
1628	3-625-755-06	s	PANEL(SD),SDI
1630	3-673-910-01	o	SCREW, CONNECTOR
1631	3-690-727-01	s	SCREW, CONNECTOR
1632	3-717-394-04	o	PLATE (SMALL), ORNAMENTAL, SW
1633	2-068-008-00	s	WASHER
1634	X-2068-004-0	s	TERMINAL ASSEMBLY

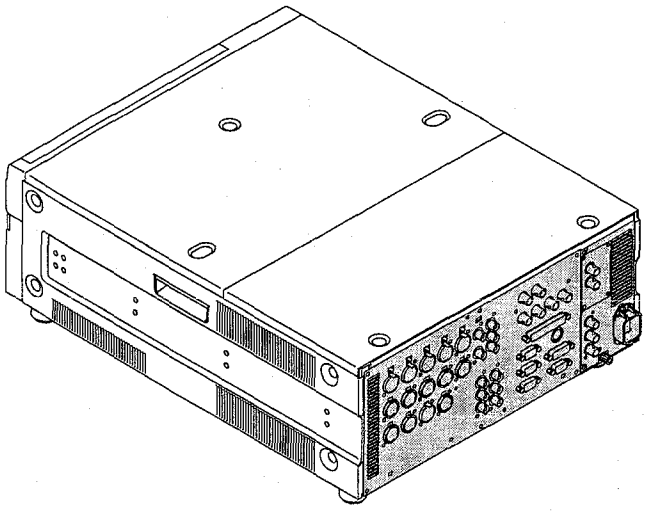

Screws/Washer

Part No.	SP	Description
7-623-422-07	s	WASHER LW 3 (TYPE 3)
7-682-948-09	s	SCREW +PSW 3X8
7-685-646-79	s	SCREW +BVTP 3X8
7-685-647-79	s	SCREW +BVTP 3X10
7-685-871-01	s	SCREW BVTT 3X6
7-685-871-09	s	SCREW,+BVTT 3X6 (S)
7-685-873-09	s	SCREW,+BVTT 3X10

Control Panel Block (DVW Series)

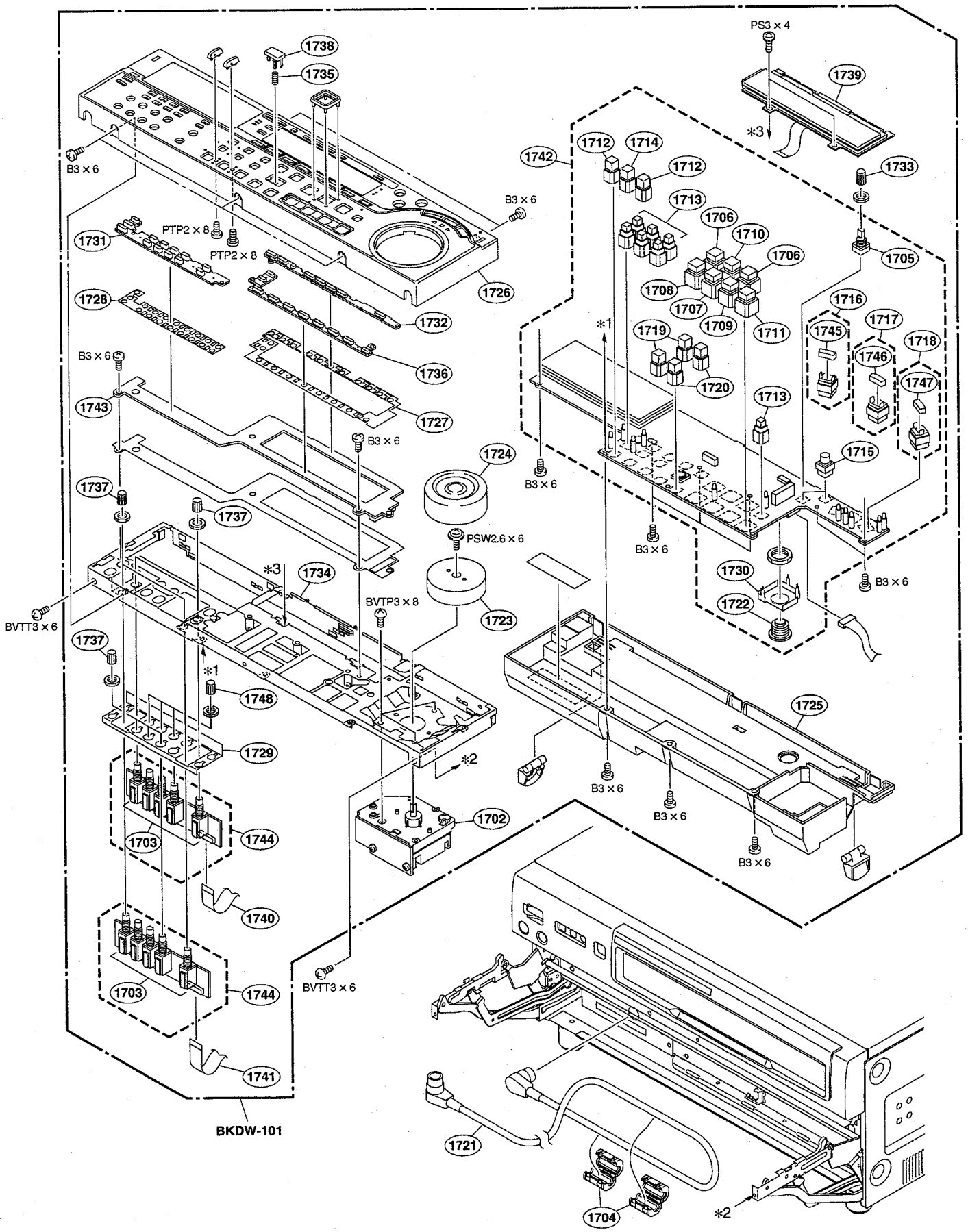

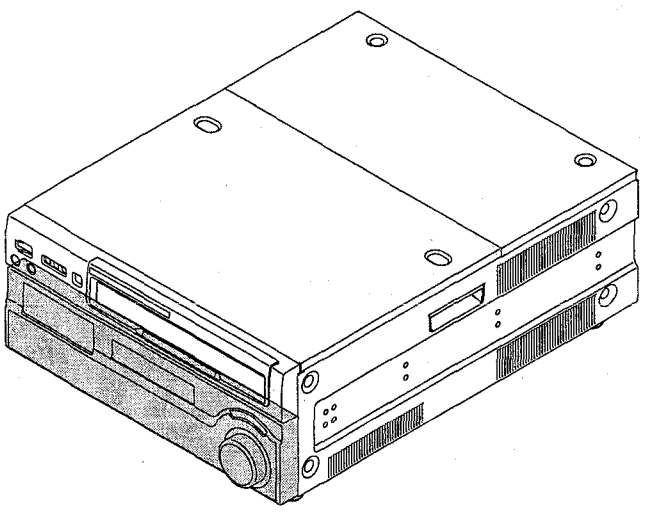

No.	Part No.	SP	Description
1702	A-8325-080-C	s	DIAL ASSY
1703	1-225-565-11	s	RES, VAR, CARBON (WITH SW) 5K
1704	1-469-778-11	o	CLAMP, FERRITE
1705	1-476-345-11	s	ENCODER, ROTARY
1706	1-692-890-11	s	SWITCH, TACTILE
1707	1-692-890-21	s	SWITCH, TACTILE (WITH LIGHT)
1708	1-692-890-31	s	SWITCH, TACTILE (WITH LIGHT)
1709	1-692-890-41	s	SWITCH, TACTILE (WITH LIGHT)
1710	1-692-891-21	s	SWITCH, TACTILE (WITH LIGHT)
1711	1-692-892-21	s	SWITCH, TACTILE (WITH LIGHT)
1712	1-692-994-11	s	SWITCH, TACTILE (ILLUMINATED)
1713	1-762-042-11	s	SWITCH, TACTILE (ILLUMINATED)
1714	1-762-132-11	s	SWITCH, TACTILE (WITH LIGHT)
1715	1-786-003-11	s	SWITCH, TACTILE
1716	1-786-004-12	s	SWITCH, TACTILE
1717	1-786-005-12	s	SWITCH, TACTILE
1718	1-786-006-12	s	SWITCH, TACTILE
1719	1-786-010-11	s	SWITCH, TACTILE (ILLUMINATED)
1720	1-786-011-11	s	SWITCH, TACTILE (ILLUMINATED)
1721	1-792-418-12	s	CORD, CONNECTION
1722	1-794-229-11	s	CONNECTOR, ROUND TYPE (RECEPTACLE)
1723	3-180-632-02	o	KNOB, DIAL
1724	3-180-633-04	s	RUBBER, DIAL KNOB
1725	3-204-469-01	s	CASE, KY BACK
1726	2-177-338-01	s	(DV-M) CONTROL PANEL (DVW-M2000/M2000P)
	2-177-339-01	s	(DV) CONTROL PANEL (DVW-2000/2000P)
1727	3-204-478-01	s	SHEET (A), DOME
1728	3-204-479-01	s	SHEET (B), DOME
1729	3-204-533-01	o	PLATE, VR
1730	3-204-579-01	o	FRAME (CN)
1731	3-205-391-01	s	KEY TOP (MO2)
1732	3-205-393-01	s	KEY TOP (ED2)
1733	3-205-513-01	s	KNOB,MC
1734	2-177-415-01	s	KY CHASSIS 2
1735	3-611-769-01	s	SPRING COMPRESSION
1736	3-625-735-01	s	KEY TOP (FN)
1737	3-205-863-01	s	KNOB,AU
1738	3-615-810-02	s	TOP, KEY 9X6
1739	9-885-061-91	o	FIELD EMISSION DISPLAY UNIT
1740	9-885-011-11	o	CABLE, FLAT
1741	9-885-011-12	o	CABLE, FLAT
1742	9-885-061-80	s	MOUNTED CIRCUIT BOARD, KY-569 (MBJ907BB)
1743	9-885-065-16	o	MOUNTED CIRCUIT BOARD, KY-570 (AC027AB)
1744	9-885-061-90	o	MOUNTED CIRCUIT BOARD, VR-300 (1P50A973-02)
1745	3-205-563-01	s	KEY TOP
1746	3-205-564-01	s	KEY TOP
1747	3-205-565-01	s	KEY TOP
1748	3-205-863-11	s	KNOB, AU

Screws

Part No.	SP	Description
7-621-759-40	s	SCREW +PSW 2.6X6
7-682-547-09	s	SCREW +B3X6
7-682-645-01	s	SCREW +PS 3X4
7-685-105-19	s	SCREW +PTP 2X8
7-685-646-79	s	SCREW +BVTP 3X8

1-3. Electrical Parts List

1-3-1. Frame List

Ref. No. or Q'ty	Part No.	SP	Description
1pc	A-8267-571-C	s	RING (13) ASSY (RP), BRUSH SLIP (FOR HDW-M/S/A, DVW-M, and MSW-M/A)
	A-8320-032-C	s	RING (9) ASSY (RP), BRUSH SLIP (FOR HDW-2000/D2000, DVW-2000/P, and MSW-2000)
1pc	⚠ 1-468-500-17	s	REGULATOR, SWITCHING
1pc	⚠ 1-576-232-12	s	FUSE (H.B.C) (FOR REGULATOR, SWITCHING)
1pc	1-787-142-11	s	FAN, D.C. (FOR REGULATOR, SWITCHING)
2pcs	1-543-316-32	s	HEAD, SENSING (SMALL TYPE) "TAPE TOP/END SENSOR"
FL001	1-469-778-11	o	CLAMP, FERRITE (FOR HN003)
FL002	1-469-778-11	o	CLAMP, FERRITE (FOR HN003)
FL003	4-714-678-01	o	FILTER, DATA LINE (ES-FPD-50-1) (FOR HN040)
FL004	4-714-678-01	o	FILTER, DATA LINE (ES-FPD-50-1) (FOR HN041)
FL005	1-469-969-11	s	CLAMP, FERRITE (For BKMW-E2000/E3000, MSW-M2000E/ M2000EP/M2100E/M2100EP)
FL006	1-543-798-21	o	FILTER, CLAMP (FERRITE CORE) (FOR HDW series)
FL007	1-543-793-11	s	FILTER, CLAMP (FERRITE CORE) (FOR HDW series)
FL008	1-543-793-11	s	FILTER, CLAMP (FERRITE CORE) (FOR HDW series)
FL009	1-543-793-11	s	FILTER, CLAMP (FERRITE CORE) (FOR HDW series)
FL010	1-543-793-11	s	FILTER, CLAMP (FERRITE CORE) (FOR HDW series)
FAN1	1-763-495-11	s	FAN (80 SQUARE), D.C.
FAN2	1-763-495-11	s	FAN (80 SQUARE), D.C.
FAN3	1-763-538-12	s	FAN (30 SQUARE), D.C.
FAN4	1-763-538-12	s	FAN (30 SQUARE), D.C.
H001	8-825-778-23	s	HEAD, AUDIO (EPS244-2103G)
H002	8-825-554-84	s	CTL HEAD, PS244-21B
H003	8-825-770-74	s	HEAD, FE EF291-21
M002	1-698-152-22	s	MOTOR, DC (SVD-1449) "REEL SHIFT MOTOR"
M003	1-698-152-11	s	MOTOR, DC (SVD-1449) "THREADING MOTOR"
M004	1-698-152-11	s	MOTOR, DC (SVD-1449) "CASSETTE COMPARTMENT MOTOR"
S001	⚠ 1-762-953-11	s	SWITCH, POWER

1-3-2. Cables and Harnesses

部品番号が記載されていないハーネスは，サービス部品として登録されていません。
これらは，リストに展開されているコンポーネント部品で補修してください。

Harnesses with no part number are not registered as spare parts.
In need of repair, get components shown in the list and repair using them.

Ref. No. or Q'ty	Part No.	SP	Description
HN002	1-961-178-11	o	HANESS, SUB (LED HP) (TO CN1/LED-357 BOARD) (TO CN4/HP-101 BOARD)
HN003	1-792-418-11	s	CORD, CONNECTION (TO CN100/FP-133 BOARD) (TO CN10/KY-569 or KY-464 BOARD)
HN004	1-961-177-11	o	HANESS, SUB (SWC-HP) (TO CN1/SWC-40 or SW-1106 (MSW-M2000E/P, M2100E/P, BKMW-E2000/E3000) BOARD) (TO CN2/HP-101 BOARD)
HN005	1-792-480-12	o	CABLE ASSEMBLY, COAXIAL 0.8m (BLK) (HKDW-102 FOR HDW RECORDER ONLY) (TO CN100/DIF-134H (HKDW-102) BOARD) (TO SDTI INPUT) (MSW RECORDER ONLY) (TO CN500/EPR-1) (TO SDTI INPUT)
HN006	1-792-481-12	o	CABLE ASSEMBLY, COAXIAL 0.8m (WHT) (HKDW-102 FOR HDW ONLY) (TO CN200/DIF-134H (HKDW-102) BOARD) (TO SDTI OUTPUT 1) (DVW and MSW ONLY) (TO CN600/EPR-1) (TO SDTI OUTPUT 1)
HN007	1-792-482-12	o	CABLE ASSEMBLY, COAXIAL 0.8m (BRN) (HKDW-102 FOR HDW ONLY) (TO CN201/DIF-134H (HKDW-102) BOARD) (TO SDTI OUTPUT 2) (DVW and MSW ONLY) (TO CN601/EPR-1) (TO SDTI OUTPUT 2)
HN008	- - -		HARNESS, SUB (AC PW SW)
1pc	⚠ 1-762-953-11	s	SWITCH, POWER (TO AC INLET)
2pcs	⚠ 1-565-788-11	o	HOUSING, CONNECTOR
2pcs	⚠ 1-562-210-11	s	CONTACT, CONNECTOR (TO SWITCHING REGULATOR)
1pc	⚠ 1-562-285-11	s	HOUSING, CONNECTOR 4P
2pcs	⚠ 1-565-787-11	o	CONTACT, RECEPTACLE 1P
HN009	- - -		HARNESS, SUB (F-GND) (TO AC INLET)
1pc	⚠ 1-565-788-11	o	HOUSING, CONNECTOR
1pc	⚠ 1-565-787-11	o	CONTACT, RECEPTACLE 1P (TO CHASSIS)
1pc	⚠ 1-537-568-11	o	TERMINAL, GROUND
HN010	1-790-085-11	s	CABLE ASSEMBLY, COAXIAL 0.8m (RED) (DVW and MSW RECORDER ONLY) (TO CN100/SDI-52 BOARD) (TO SDI INPUT)
HN011	1-792-476-12	o	CABLE ASSEMBLY, COAXIAL 0.8m (YEL) (DVW and MSW RECORDER ONLY) (TO CN101/SDI-52 BOARD) (TO ACTIVE THROUGH OUTPUT)

(Cables and Harnesses)

Ref. No. or Q'ty	Part No.	SP	Description
HN012	1-792-477-12	o	CABLE ASSEMBLY, COAXIAL 0.8m (ORG)
(TO CN500/SDI-52 BOARD)			
(TO SDI OUTPUT 2)			
HN013	1-791-718-12	o	CABLE ASSEMBLY, COAXIAL 0.8m (GRN)
(TO CN501/SDI-52 BOARD)			
(TO SDI OUTPUT 1)			
HN014	1-792-478-12	o	CABLE ASSEMBLY, COAXIAL 0.8m (BLU)
(TO CN600/SDI-52 BOARD)			
(TO SDI OUTPUT 3 "SUPER")			
HN015	1-960-400-11	o	HARNESS, SUB (T-TENREG)
(TO CN207/TR-120 BOARD)			
(TO CN207/DR-508 or DR-414 BOARD)			
HN016	1-960-399-11	o	HARNESS, SUB (S-TENREG)
(TO CN206/TR-119 BOARD)			
(TO CN206/DR-508 or DR-414 BOARD)			
HN017	1-677-293-11	s	PRINTED WIRING BOARD, FL-276
(TO CN204/DR-508 or DR-414 BOARD)			
(TO S-REEL)			
HN018	1-677-293-11	s	PRINTED WIRING BOARD, FL-276
(TO CN205/DR-508 or DR-414 BOARD)			
(TO T-REEL)			
HN019	1-960-401-11	o	HARNESS, SUB (CASS COM)
(TO CN930/CL-29 BOARD)			
(TO CN205/DR-508 or DR-414 BOARD)			
HN020	1-665-836-11	s	PRINTED WIRING BOARD, CL-41
(TO CN934/PC-70 BOARD)			
(TO CN933/CL-29 BOARD)			
HN021	1-948-962-21	o	HARNESS, SUB (CC LAMP)
(TO CN932/LP-81 BOARD)			
(TO CN932/CL-29 BOARD)			
HN022	- - -		HARNESS, SUB (CC MO)
(TO CN935/CL-29 BOARD)			
1pc	1-569-195-11	o	HOUSING, CONNECTOR 2P
2pcs	1-569-193-11	o	TERMINAL, SOLDERLESS
(TO CASSETTE COMPARTOMENT MOTOR)			
HN023	- - -		HANESS, SUB (LOADING M. FG)
(TO CN920/CCM-15 BOARD)			
1pc	1-569-196-11	o	HOUSING, CONNENCTOR 3P
2pcs	1-569-193-11	o	TERMINAL, SOLDERLESS
(TO CN223/PTC-102 BOARD)			
1pc	1-569-196-11	o	HOUSING, CONNENCTOR 3P
3pcs	1-569-193-11	o	TERMINAL, SOLDERLESS
(TO CN233/HN-268 BOARD)			
1pc	1-569-198-11	o	HOUSING, CONNECTOR 5P
5pcs	1-569-193-11	o	TERMINAL, SOLDERLESS
HN024	1-960-403-13	o	HARNESS, SUB (SOL ASSY)
(TO CN216/HN-268 BOARD)			
(TO CN216/DR-508 or DR-414 BOARD)			
HN025	1-960-402-12	o	HARNESS, SUB (CASS SENS)
(TO CN1/PTC-99 BOARD)			
(TO CN210/DR-508 or DR-414 BOARD)			

(Cables and Harnesses)

Ref. No. or Q'ty	Part No.	SP	Description
HN026	- - -		HARNESS, SUB (DT)
(TO CN201/DT-47 BOARD)			
1pc	1-778-549-11	o	HOUSING, CONNECTOR 20P
20pcs	1-778-554-11	o	TERMINAL, SOLDERLESS
(TO CN201/DR-508 or DR-414 BOARD)			
1pc	1-778-549-11	o	HOUSING, CONNECTOR 20P
20pcs	1-778-554-11	o	TERMINAL, SOLDERLESS
HN027	- - -		HARNESS, SUB (DRUM)
(TO DRUM ASSEMBLY)			
1pc	1-580-587-11	o	HOUSING, CONNECTOR 22P
6pcs	1-580-599-11	o	TERMINAL, SOLDERLESS
14pcs	1-573-176-11	o	TERMINAL, SOLDERLESS
(TO CN202/DR-508 or DR-414 BOARD)			
1pc	1-580-586-11	o	HOUSING, CONNECTOR 20P
6pcs	1-580-599-11	o	TERMINAL, SOLDERLESS
14pcs	1-573-176-11	o	TERMINAL, SOLDERLESS
HN028	1-960-398-11	o	HARNESS, SUB (CAPSTAN)
(TO CN203/DR-508 or DR-414 BOARD)			
(TO CAPSTAN MOTOR)			
HN029	- - -		HARNESS, SUB (CTL-HEAD)
(TO CN212/CTL HEAD)			
1pc	1-569-195-11	o	HOUSING, CONNECTOR 2P
2pcs	1-565-193-11	o	TERMINAL, SOLDERLESS
(TO CN213/DR-508 or DR-414 BOARD)			
1pc	1-569-618-11	o	HOUSING, CONNECTOR 3P
2pcs	1-565-977-11	o	TERMINAL, SOLDERLESS
1pc	1-766-387-11	o	TERMINAL, SOLDERLESS
HN030	1-960-377-12	o	HARNESS, SUB (TOP SENS)
(TO CN1/TAPE TOP SENSOR)			
(TO CN213/DR-508 or DR-414 BOARD)			
HN031	1-960-378-12	o	HARNESS, SUB (END SENS)
(TO CN1/TAPE END SENSOR)			
(TO CN214/DR-508 or DR-414 BOARD)			
HN032	1-803-490-11	s	SENSOR DEW CONDENSATION
(TO CN215/DR-508 or DR-414 BOARD)			
HN033	- - -		HARNESS, SUB (SFT MTR)
(TO CN2/PTC-99 BOARD)			
1pc	1-569-195-11	o	HOUSING, CONNECTOR 2P
2pcs	1-569-193-11	o	TERMINAL, SOLDERLESS
(TO REEL SHIFT MOTOR)			
HN034	- - -		HARNESS, SUB (TC)
(TO CN200/TC-104 BOARD)			
1pc	1-778-550-11	o	HOUSING, CONNECTOR 30P
30pcs	1-778-554-11	o	TERMINAL, SOLDERLESS
(TO CN200/DR-508 or DR-414 BOARD)			
1pc	1-778-550-11	o	HOUSING, CONNECTOR 30P
30pcs	1-778-554-11	o	TERMINAL, SOLDERLESS
HN035	1-960-388-12	o	HARNESS, SUB (RF REC)
(TO CN101/EQ-84 BOARD)			
1pc	1-565-978-11	o	HOUSING, CONNECTOR 6P
6pcs	1-766-387-11	o	TERMINAL, SOLDERLESS
(TO CN200/EQ-84 BOARD, RECORDER ONLY)			
1pc	1-565-978-11	o	HOUSING, CONNECTOR 6P
6pcs	1-766-387-11	o	TERMINAL, SOLDERLESS
(TO CN1/DRUM ASSEMBLY)			
1pc	1-580-584-11	o	HOUSING, CONNECTOR 16P
8pcs	1-573-176-11	o	TERMINAL, SOLDERLESS
4pcs	1-580-599-11	o	TERMINAL, SOLDERLESS

(Cables and Harnesses)

Ref. No. or Q'ty	Part No.	SP	Description
HN036	1-960-389-12	o	HARNESS, SUB (RF PB)
(TO CN600/EQ-84 BOARD)			
1pc	1-569-618-11	o	HOUSING, CONNECTOR 3P
3pcs	1-766-387-11	o	TERMINAL, SOLDERLESS
(TO CN1600/EQ-84 BOARD)			
1pc	1-569-618-11	o	HOUSING, CONNECTOR 3P
3pcs	1-766-387-11	o	TERMINAL, SOLDERLESS
(TO CN700/EQ-84 BOARD)			
1pc	1-569-618-11	o	HOUSING, CONNECTOR 3P
3pcs	1-766-387-11	o	TERMINAL, SOLDERLESS
(TO CN1700/EQ-84 BOARD)			
1pc	1-569-618-11	o	HOUSING, CONNECTOR 3P
3pcs	1-766-387-11	o	TERMINAL, SOLDERLESS
(TO CN2/DRUM ASSEMBLY)			
1pc	1-580-583-11	o	HOUSING, CONNECTOR 14P
8pcs	1-573-176-11	o	TERMINAL, SOLDERLESS
4pcs	1-580-599-11	o	TERMINAL, SOLDERLESS
HN038	- - -		HARNESS, SUB (FULL ERASE HEAD) (RECORDER ONLY)
(TO CN300/TC-104)			
1pc	1-569-618-11	o	HOUSING, CONNECTOR 3P
2pcs	1-565-977-11	s	TERMINAL, SOLDERLESS
1pc	1-766-387-11	o	TERMINAL, SOLDERLESS
(TO CN1/FULL ERASE HEAD)			
1pc	1-569-196-11	o	HOUSING, CONNECTOR 3P
2pcs	1-569-193-11	o	TERMINAL, SOLDERLESS
1pc	1-569-191-11	o	TERMINAL, SOLDERLESS
HN039	- - -		HARNESS, SUB (AE/AT)
(TO CN100/AE-31 BOARD)			
1pc	1-569-618-11	o	HOUSING, CONNECTOR 3P
3pcs	1-766-387-11	o	TERMINAL, SOLDERLESS
(TO CN200/AE-31 BOARD)			
1pc	1-569-619-11	o	HOUSING, CONNECTOR 4P
3pcs	1-766-387-11	o	TERMINAL, SOLDERLESS
(TO CN600/AE-31 BOARD)			
1pc	1-569-620-11	o	HOUSING, CONNECTOR 5P
3pcs	1-766-387-11	o	TERMINAL, SOLDERLESS
(TO CN100/TC-104 BOARD)			
1pc	1-565-978-11	o	HOUSING, CONNECTOR 6P
6pcs	1-766-387-11	o	TERMINAL, SOLDERLESS
(TO AT HEAD)			
1pc	1-580-585-11	o	HOUSING, CONNECTOR 18P
10pcs	1-573-176-11	o	TERMINAL, SOLDERLESS
5pcs	1-580-599-11	o	TERMINAL, SOLDERLESS
HN040	1-792-489-11	o	WIRE ASSEMBLY, FLAT TYPE
(TO CN61/DR-508 or DR-414 BOARD)			
(TO CN61/MB-884 BOARD)			
HN041	1-792-489-11	o	WIRE ASSEMBLY, FLAT TYPE
(TO CN62/DR-508 or DR-414 BOARD)			
(TO CN62/MB-884 BOARD)			
HN042	- - -		HARNESS, SUB (18V PW)
(TO CN65/DR-508 or DR-414 BOARD)			
1pc	1-562-285-11	o	HOUSING, CONNECTOR 4P
4pcs	1-562-210-11	s	CONTACT, CONNECTOR
(TO CN65/MB-884 BOARD)			
1pc	1-562-285-11	o	HOUSING, CONNECTOR 4P
4pcs	1-562-210-11	s	CONTACT, CONNECTOR

(Cables and Harnesses)

Ref. No. or Q'ty	Part No.	SP	Description
HN043	- - -		HARNESS, SUB (AE/MB)
(TO CN68/AE-31 BOARD)			
1pc	1-580-594-11	o	HOUSING, CONNECTOR 36P
10pcs	1-573-176-11	o	TERMINAL, SOLDERLESS
22pcs	1-580-599-11	o	TERMINAL, SOLDERLESS
(TO CN68/MB-884 BOARD)			
1pc	1-580-594-11	o	HOUSING, CONNECTOR 36P
10pcs	1-573-176-11	o	TERMINAL, SOLDERLESS
22pcs	1-580-599-11	o	TERMINAL, SOLDERLESS
HN044	1-757-486-11	o	CABLE ASSY,COAXIAL (RED) (HDW RECORDER ONLY)
(TO CN200/RX-80 BOARD or CN1/SDI-63 BOARD)			
(TO HDSDI INPUT)			
HN045	1-757-485-11	o	CABLE ASSY,COAXIAL (YEL) (HDW RECORDER ONLY)
(TO CN201/RX-80 BOARD or CN2/SDI-63 BOARD)			
(TO HDSDI INPUT MONITOR)			
HN046	1-757-487-11	o	CABLE ASSY,COAXIAL (GRN) (HDW SERIES ONLY)
(TO CN200/TX-96 BOARD or CN200/SDI-63 BOARD)			
(TO HDSDI OUTPUT1)			
HN047	1-757-488-11	o	CABLE ASSY,COAXIAL (ORN) (HDW SERIES ONLY)
(TO CN202/TX-96 BOARD or CN201/SDI-63 BOARD)			
(TO HDSDI OUTPUT2)			
HN048	1-757-489-11	o	CABLE ASSY,COAXIAL (BLU) (HDW SERIES ONLY)
(TO CN300/TX-96 BOARD or CN300/SDI-63 BOARD)			
(TO HDSDI OUTPUT3"SUPER")			
HN049	1-757-387-11	s	WIRE, FLAT TYPE (4 CORE)
(TO CN1/DIO-65 BOARD)			
(TO CN1/SE-606 BOARD)			
HN050	- - -		HARNESS, SUB (DEMAGNETIZATION) (HDW-M/S, DVW-M, and MSW-M)
(TO CN600/TC-104 BOARD)			
1pc	1-569-620-11	o	HOUSING, CONNECTOR 5P
3pcs	1-766-387-11	o	TERMINAL, SOLDERLESS
HN051	- - -		HARNESS, SUB (HP-SW)
(TO CN1/LED-357 BOARD)			
1pc	1-568-819-11	o	HOUSING, CONNECTOR 9P
8pcs	1-565-977-11	s	TERMINAL, SOLDERLESS
(TO CN4/HP-101 BOARD)			
1pc	1-568-819-11	o	HOUSING, CONNECTOR 9P
9pcs	1-565-977-11	s	TERMINAL, SOLDERLESS
(TO CN2/SW-1106 (MSW-M2000E/P, M2100E/P, BKMW-E2000/E3000) BOARD)			
1pc	1-569-617-11	o	HOUSING, CONNECTOR 2P
1pc	1-565-977-11	s	TERMINAL, SOLDERLESS
HN052	1-827-008-11	s	CORD, CONNECTION
(TO CN701 or CN1103/VN-13 (MSW-M2000E/P, M2100E/P, BKMW-E2000/E3000) BOARD)			
(TO CN2/IF-885 (MSW-M2000E/P, M2100E/P, BKMW-E2000/E3000) BOARD)			

(Cables and Harnesses)

Ref. No. or Q'ty	Part No.	SP	Description
HN053	- - -		HARNESS, SUB (LED) (TO CN702 or CN1102/VN-13 (MSW-M2000E/P, M2100E/P,BKMW-E2000/E3000) BOARD)
1pc	1-569-618-11	o	HOUSING, CONNECTOR 3P
3pcs	1-565-977-11	s	TERMINAL, SOLDERLESS (TO CN3/IF-885 (MSW-M2000E/P, M2100E/P, BKMW-E2000/E3000) BOARD)
1pc	1-569-618-11	o	HOUSING, CONNECTOR 3P
3pcs	1-565-977-11	s	TERMINAL, SOLDERLESS
HN054	- - -		HARNESS, SUB (EPR-VN) (TO CN2/IF-886 (MSW-M2000E/P, M2100E/P, BKMW-E2000/E3000) BOARD) (TO CN5/VN-13 (MSW-M2000E/P, M2100E/P, BKMW-E2000/E3000) BOARD)
HN101	9-885-011-11	o	CABLE, FLAT (RECORDER ONLY) (TO CN3/KY-569 or KY-464 (MBJ834) BOARD) (TO CN1/VR-262 (AC014AA) BOARD)
HN102	9-885-011-12	o	CABLE, FLAT (TO CN5/KY-569 or KY-464 (MBJ834) BOARD) (TO CN1/VR-262 (AC014AA) BOARD)
HN103	9-885-011-15	o	HARNESS, SUB (FED) (TO CN8/KY-569 or KY-464 (MBJ834) BOARD) (TO FIELD EMISSION DISPLAY UNIT)
HN104	9-885-011-10	o	HARNESS, SUB (TO CN2/KY-569 or KY-464 (MBJ834) BOARD) (TO SEARCH DIAL)

1-3-3. External Connectors

Ref. No. or Q'ty	Part No.	SP	Description
AES/EBU INPUT/OUTPUT CH1 TO CH8			
	1-794-428-11	s	CONNECTOR ASSY, BNC (8 CONNECTORS) (MSW RECORDER ONLY)
AES/EBU INPUT CH1/2, OUTPUT CH1/2, CH3/4			
	1-815-306-11	s	CONNECTOR ASSY, BNC (6 CONNECTORS) (HDW-D2000/M2000/M2000P and DVW-M2000/M2000P ONLY)
AES/EBU INPUT/OUTPUT CH1/2, CH3/4			
	1-815-086-11	s	CONNECTOR ASSY, BNC (4 CONNECTORS) (HDW-2000/S2000/S2000P and DVW-2000/2000P ONLY)
AES/EBU OUTPUT CH1 to CH8			
	1-815-307-11	s	CONNECTOR ASSY, BNC (4 CONNECTORS) (MSW PLAYER AND HDW-M2100/M2100P ONLY)
AES/EBU OUTPUT CH1/2, CH3/4			
	1-815-087-11	s	CONNECTOR ASSY, BNC (2 CONNECTORS) (HDW-A2100 ONLY)
AUDIO INPUT CH1/CH2			
	1-816-670-11	s	CONNECTOR, 3P-XLR (RECEPTACLE) For SY
	1-816-669-11	s	CONNECTOR, 3P-XLR (RECEPTACLE) For J
AUDIO INPUT CH3/CH4			
	1-816-670-11	s	CONNECTOR, 3P-XLR (RECEPTACLE) For SY
	1-816-669-11	s	CONNECTOR, 3P-XLR (RECEPTACLE) For J
CUE IN			
	1-766-386-13	s	CONNECTOR, 3P-XLR TYPE (FEMALE) For SY
	1-766-385-13	s	CONNECTOR, 3P-XLR TYPE (MALE) For J
AUDIO OUTPUT CH1/CH2			
	1-816-669-11	s	CONNECTOR, 3P-XLR (RECEPTACLE) For SY
	1-816-670-11	s	CONNECTOR, 3P-XLR (RECEPTACLE) For J
AUDIO OUTPUT CH3/CH4			
	1-816-669-11	s	CONNECTOR, 3P-XLR (RECEPTACLE) For SY
	1-816-670-11	s	CONNECTOR, 3P-XLR (RECEPTACLE) For J
CUE OUT			
	1-766-385-13	s	CONNECTOR, 3P-XLR TYPE (MALE) For SY
	1-766-386-13	s	CONNECTOR, 3P-XLR TYPE (FEMALE) For J
CONTROL PANEL			
	1-794-229-11	o	CONNECTOR, ROUND TYPE (RECEPTACLE)
ETHERNET (BKMW-E2000)			
	1-817-290-11	s	JACK, MODULAR (WITH LED)
MONITOR OUTPUT R/L			
	1-816-669-11	s	CONNECTOR, 3P-XLR (RECEPTACLE) For SY
	1-186-670-11	s	CONNECTOR, 3P-XLR (RECEPTACLE) For J
PHONE			
	1-565-327-11	s	JACK, LARGE TYPE (6.3MM)

```
Ref. No.
or Q'ty  Part No.     SP Description

REMOTE1 IN
        1-568-676-11 o CONNECTOR, D-SUB 9P

REMOTE1 OUT
        1-568-676-11 o CONNECTOR, D-SUB 9P

REMOTE2 PALALLEL I/O
        1-766-727-11 o CONNECTOR, D-SUB 50P, FEMALE

RS-232C
        1-779-759-11 o CONNECTOR, D-SUB 9P

SDI INPUT
        1-794-230-11 s CONVERT, COAXIAL CONNECTOR

SDI OUTPUT 1/2/3 (SUPER)
        1-794-231-11 s CONVERT, COAXIAL CONNECTOR

SDTI-CP INPUT,OUTPUT 1/2
        1-794-231-11 s CONVERT, COAXIAL CONNECTOR

HDSDI INPUT
        1-757-486-11 o CABLE ASSY,COAXIAL (RED)

HDSDI INPUT MONITOR
        1-757-485-11 o CABLE ASSY,COAXIAL (YEL)

HDSDI OUTPUT1
        1-757-487-11 o CABLE ASSY,COAXIAL (GRN)

HDSDI OUTPUT2
        1-757-488-11 o CABLE ASSY,COAXIAL (ORG)

HDSDI OUTPUT3(SUPER)
        1-757-489-11 o CABLE ASSY,COAXIAL (BLU)

TIME CODE IN
        1-766-386-13 s CONNECTOR, 3P-XLR TYPE (FEMALE)
                       For SY
        1-766-385-13 s CONNECTOR, 3P-XLR TYPE (MALE)
                       For J

TIME CODE OUT
        1-766-385-13 s CONNECTOR, 3P-XLR TYPE (MALE)
                       For SY
        1-766-386-13 s CONNECTOR, 3P-XLR TYPE (FEMALE)
                       For J

VIDEO CONTROL (DVW and MSW SERIES)
VIDEO CONTROL 15P (HDW SERIES)
        1-568-674-11 o CONNECTOR, D-SUB 15P

VIDEO INPUT COMPONENT Y/R-Y/B-Y
        1-573-584-11 s CONNECTOR, BNC (RECEPTACLE)

VIDEO INPUT COMPOSITE (THRU-OUT)
        1-573-580-11 s CONNECTOR, BNC (RECEPTACLE)

VIDEO INPUT REF. VIDEO (THRU-OUT)(DVW and MSW SERIES ONLY)
REF. INPUT INPUT 1125/525 (THRU-OUT)(HDW SERIES ONLY)
        1-573-580-11 s CONNECTOR, BNC (RECEPTACLE)

VIDEO OUTPUT COMPONENT Y/R-Y/B-Y
        1-573-584-11 s CONNECTOR, BNC (RECEPTACLE)

VIDEO OUTPUT COMPOSITE 1/2/3 (SUPER)
        1-573-584-11 s CONNECTOR, BNC (RECEPTACLE)

VIDEO CONTROL 9P
        1-568-676-11 o CONNECTOR, D-SUB 9P
```

1-3-4. Each Board

Index

Board		Page
AE-31		1-48
AE-31H	[Suffix 21]	1-52
	[Suffix 22-]	1-55
APR-52		1-59
APR-52A		1-78
AU-272	[Suffix 12]	1-93
	[Suffix 13-]	1-99
AU-272HS		1-104
CCM-15		1-106
CL-29		1-106
CP-350	[Suffix 13]	1-106
	[Suffix 14-]	1-107
CP-351	for SY model	1-108
	for Japan model	1-110
CP-371/B/D	[Suffix 11]	1-111
	[Suffix 12-]	1-114
CP-371A/C	[Suffix 11]	1-117
	[Suffix 12-]	1-120
CUE-13	[Suffix 11]	1-122
	[Suffix 12-]	1-125
DIF-134H		1-128
DIO-65		1-133
DM-123	[Suffix 14]	1-134
	[Suffix 15-]	1-154
DPR-155		1-175
DPR-155C		1-183
DPR-155H		1-189
DPR-194		1-193
DPR-195H		1-194
DPR-208		1-195
DPR-229/HM/M	[Suffix 11-13]	1-196
DPR-229	[Suffix 14-]	1-203
DPR-229C	[Suffix 14-]	1-210
DPR-229HM	[Suffix 14-]	1-217
DPR-229M	[Suffix 14-]	1-224
DPR-229D	[Suffix 12, 13]	1-232
	[Suffix 14-]	1-238
DPR-229DM	[Suffix 14-]	1-243
DPR-229H	[Suffix 11-13]	1-250
	[Suffix 14-]	1-254
DPR-229HD	[Suffix 13]	1-258
	[Suffix 14-]	1-264
DPR-229HS	[Suffix 13]	1-271
	[Suffix 14-]	1-276
DR-414		1-282
DR-508		1-290

Board		Page
DSP-109		1-299
DT-47	[Suffix 11]	1-302
	[Suffix 12-]	1-304
DU-178		1-305
EPR-1B	[Suffix 14]	1-306
	[Suffix 15, 16]	1-312
	[Suffix 17-]	1-320
EPR-1BA	[Suffix 14]	1-326
	[Suffix 15, 16]	1-331
	[Suffix 17-]	1-337
EPR-1C	[Suffix 16]	1-342
	[Suffix 17-]	1-346
EQ-84/H	[Suffix 12]	1-349
	[Suffix 13-]	1-356
EQ-84A/AH	[Suffix 12]	1-363
	[Suffix 13-]	1-368
FED Driver (F248B054)		*
FP-133	[Suffix 11]	1-373
	[Suffix 12-]	1-375
FP-134	[Suffix 11]	1-377
	[Suffix 12-]	1-378
HIF-1	[Suffix 21]	1-378
	[Suffix 22, 23]	1-388
	[Suffix 24-]	1-399
HIF-1A	[Suffix 21]	1-410
	[Suffix 22, 23]	1-419
	[Suffix 24]	1-429
HIF-1B	[Suffix 22, 23]	1-438
	[Suffix 24-]	1-446
HN-268		1-453
HP-101		1-454
HPR-1		1-455
HPR-1A		1-466
IF-885		1-473
IF-886		1-473
KY-464 (MBJ834)		1-473
KY-465 (AC013AA)		1-474
KY-569 (MBJ907B)		1-474
KY-570 (AC027A)		1-475
LED-357		1-475
LP-81		1-475
MB-884		1-476
MB-884D		1-476
PC-70		1-477
PTC-101		1-477
PTC-102		1-477
RC-89H		1-477
RX-80		1-478
SDI-52	[Suffix 15]	1-478
	[Suffix 17-]	1-483
SDI-52A	[Suffix 15]	1-487
	[Suffix 17-]	1-491
SDI-63		1-494
SE-606/606A		1-494
SS-89	[Suffix 16]	1-495
	[Suffix 17-]	1-506
SW-1106		1-517
SWC-40		1-518
TC-104	[Suffix 13]	1-518
	[Suffix 14-]	1-520
TR-119		1-521
TR-120		1-521
TX-96		1-521
VN-13	[Suffix 11]	1-522
	[Suffix 12]	1-530
	[Suffix 13-]	1-537
VPR-64	[Suffix 15]	1-544
	[Suffix 17-]	1-561
VPR-64A	[Suffix 15]	1-578
	[Suffix 17-]	1-589
VPR-91		1-600
VR-262 (AC014AA)		1-617
VR-300 (1P50A973)		1-618

*：この基板およびマウント部品は，サービス対象外です。
*: This board and mounted components are not registered as spare parts.

1P50A973 (VR-300)

See the VR-300 board.

AC013AA (KY-465)

See the KY-465 board.

AC014AA (VR-262)

See the VR-262 board.

AC027A (KY-570)

See the KY-570 board.

AE-31 BOARD for MSW-A2000/P
---
*N: [Lot No. 261 - 334] MSW-A2000
*P: [Lot No. 261 - 334] MSW-A2000P

Ref. No. or Q'ty		Part No.	SP	Description
1pc	*N	A-8324-954-A	o	MOUNTED CIRCUIT BOARD, AE-31
	*P	A-8324-884-A	o	MOUNTED CIRCUIT BOARD, AE-31P
2pcs		3-701-832-00	o	HINGE, CIRCUIT BOARD
C100	*N	1-164-315-11	s	CAPACITOR,CERAMIC 470PF/50V CH
	*P	1-115-414-11	s	CAPACITOR,CHIP CERAMIC 820PF
C101		1-162-925-11	s	CAPACITOR,CERAMIC 68PF/50V CH
C102		1-162-925-11	s	CAPACITOR,CERAMIC 68PF/50V CH
C103		1-119-750-11	s	CAPACITOR,TANTALUM 22MF/6.3V
C104		1-127-951-11	s	CAPACITOR,CHIP FILM 0.015MF
C105		1-110-569-11	s	CAPACITOR,TANTALUM 47MF/6.3V
C106		1-164-230-11	s	CAPACITOR,CERAMIC 220PF/50V
C107		1-115-154-11	s	CAPACITOR ELECT 10MF/16V(BP)
C108		1-164-218-11	s	CAPACITOR,CERAMIC 180PF/50V CH
C109		1-104-851-11	s	CAPACITOR,TANTALUM 10MF/10V
C110		1-127-949-21	s	CAPACITOR,FILM 0.0068MF/16V
C111		1-115-414-11	s	CAPACITOR,CHIP CERAMIC 820PF
C112		1-104-851-11	s	CAPACITOR,TANTALUM 10MF/10V
C113		1-104-851-11	s	CAPACITOR,TANTALUM 10MF/10V
C114		1-104-851-11	s	CAPACITOR,TANTALUM 10MF/10V
C115		1-127-955-11	s	CAPACITOR,FILM 0.068MF (3225)
C116		1-162-923-11	s	CAPACITOR,CERAMIC 47PF/50V CH
C117		1-127-952-11	s	CAPACITOR,FILM 0.022MF (3216)
C118		1-127-952-11	s	CAPACITOR,FILM 0.022MF (3216)
C119		1-127-952-11	s	CAPACITOR,FILM 0.022MF (3216)
C120		1-127-952-11	s	CAPACITOR,FILM 0.022MF (3216)
C121		1-162-919-11	s	CAPACITOR,CERAMIC 22PF/50V CH
C122		1-127-966-11	s	CAPACITOR,FILM 0.0015MF (2012)
C123		1-162-919-11	s	CAPACITOR,CERAMIC 22PF/50V CH
C124		1-162-919-11	s	CAPACITOR,CERAMIC 22PF/50V CH
C125		1-115-154-11	s	CAPACITOR ELECT 10MF/16V(BP)
C126		1-115-154-11	s	CAPACITOR ELECT 10MF/16V(BP)
C200		1-104-851-11	s	CAPACITOR,TANTALUM 10MF/10V
C201	*N	1-164-315-11	s	CAPACITOR,CERAMIC 470PF/50V CH
	*P	1-115-412-11	s	CAPACITOR,CERAMIC 680PF/25V CH
C202		1-162-923-11	s	CAPACITOR,CERAMIC 47PF/50V CH
C203		1-162-923-11	s	CAPACITOR,CERAMIC 47PF/50V CH
C204		1-119-750-11	s	CAPACITOR,TANTALUM 22MF/6.3V
C205		1-127-951-11	s	CAPACITOR,CHIP FILM 0.015MF
C206		1-110-569-11	s	CAPACITOR,TANTALUM 47MF/6.3V
C207		1-164-230-11	s	CAPACITOR,CERAMIC 220PF/50V
C208		1-115-154-11	s	CAPACITOR ELECT 10MF/16V(BP)
C209		1-164-218-11	s	CAPACITOR,CERAMIC 180PF/50V CH
C210		1-104-851-11	s	CAPACITOR,TANTALUM 10MF/10V
C211		1-127-949-21	s	CAPACITOR,FILM 0.0068MF/16V
C212		1-115-414-11	s	CAPACITOR,CHIP CERAMIC 820PF
C213		1-104-851-11	s	CAPACITOR,TANTALUM 10MF/10V
C214		1-104-851-11	s	CAPACITOR,TANTALUM 10MF/10V
C215		1-104-851-11	s	CAPACITOR,TANTALUM 10MF/10V
C216		1-127-955-11	s	CAPACITOR,FILM 0.068MF (3225)
C217		1-162-923-11	s	CAPACITOR,CERAMIC 47PF/50V CH
C218		1-127-952-11	s	CAPACITOR,FILM 0.022MF (3216)
C219		1-127-952-11	s	CAPACITOR,FILM 0.022MF (3216)
C220		1-127-952-11	s	CAPACITOR,FILM 0.022MF (3216)
C221		1-127-952-11	s	CAPACITOR,FILM 0.022MF (3216)
C222		1-162-919-11	s	CAPACITOR,CERAMIC 22PF/50V CH
C223		1-127-966-11	s	CAPACITOR,FILM 0.0015MF (2012)

(AE-31 BOARD for MSW-A2000/P)

Ref. No. or Q'ty	Part No.	SP	Description
C224	1-162-919-11	s	CAPACITOR,CERAMIC 22PF/50V CH
C225	1-162-919-11	s	CAPACITOR,CERAMIC 22PF/50V CH
C226	1-115-154-11	s	CAPACITOR ELECT 10MF/16V(BP)
C227	1-115-154-11	s	CAPACITOR ELECT 10MF/16V(BP)
C300	1-162-923-11	s	CAPACITOR,CERAMIC 47PF/50V CH
C301	1-162-919-11	s	CAPACITOR,CERAMIC 22PF/50V CH
C302	1-162-919-11	s	CAPACITOR,CERAMIC 22PF/50V CH
C303	1-115-154-11	s	CAPACITOR ELECT 10MF/16V(BP)
C304	1-115-154-11	s	CAPACITOR ELECT 10MF/16V(BP)
C400	1-113-985-11	s	CAPACITOR,TANTALUM 10MF/20V
C401	1-127-947-11	s	CAPACITOR,FILM 0.0033MF (2012)
C402	1-127-978-11	s	CAPACITOR,FILM 0.01MF (2012)
C403	1-127-947-11	s	CAPACITOR,FILM 0.0033MF (2012)
C404	1-127-957-11	s	CAPACITOR,FILM 0.0056MF (2012)
C405	1-162-919-11	s	CAPACITOR,CERAMIC 22PF/50V CH
C406	1-127-953-11	s	CAPACITOR,FILM 0.033MF (3216)
C407	1-115-154-11	s	CAPACITOR ELECT 10MF/16V(BP)
C408	1-115-414-11	s	CAPACITOR,CHIP CERAMIC 820PF
C409	1-109-899-11	s	CAPACITOR,CHIP CERAMIC 330PF
C410	1-115-154-11	s	CAPACITOR ELECT 10MF/16V(BP)
C500	1-127-956-11	s	CAPACITOR,CHIP FILM 0.1MF
C501	1-164-230-11	s	CAPACITOR,CERAMIC 220PF/50V
C502	1-113-985-11	s	CAPACITOR,TANTALUM 10MF/20V
C503	1-115-416-11	s	CAPACITOR,CERAMIC 1000PF/25V
C504	1-115-416-11	s	CAPACITOR,CERAMIC 1000PF/25V
C505	1-119-751-11	s	CAPACITOR,TANTALUM 22MF/16V
C506	1-109-900-11	s	CAPACITOR, CHIP CERAMIC 470PF
C507	1-109-899-11	s	CAPACITOR,CHIP CERAMIC 330PF
C600	1-165-176-11	s	CAPACITOR,CERAMIC 47000PF/16V
C601	1-162-968-11	s	CAPACITOR,CERAMIC 4700PF/50V B
C602	1-162-968-11	s	CAPACITOR,CERAMIC 4700PF/50V B
C603	1-119-751-11	s	CAPACITOR,TANTALUM 22MF/16V
C604	1-109-897-11	s	CAPACITOR,CHIP CERAMIC 0.015MF
C605	1-109-898-11	s	CAPACITOR,CHIP CERAMIC 18000PF
C607	1-164-677-11	s	CAPACITOR,CERAMIC 0.033MF/16V
C700	1-107-826-11	s	CAPACITOR,CHIP CERAMIC 0.1MF
C701	1-107-826-11	s	CAPACITOR,CHIP CERAMIC 0.1MF
C702	1-110-563-11	s	CAPACITOR CERAMIC 0.068MF/16V
C703	1-110-563-11	s	CAPACITOR CERAMIC 0.068MF/16V
C704	1-104-851-11	s	CAPACITOR,TANTALUM 10MF/10V
C705	1-104-851-11	s	CAPACITOR,TANTALUM 10MF/10V
C706	1-135-333-11	s	CAPACITOR TANTALUM 1MF/16V
C707	1-135-333-11	s	CAPACITOR TANTALUM 1MF/16V
C800	1-135-333-11	s	CAPACITOR TANTALUM 1MF/16V
C801	1-135-333-11	s	CAPACITOR TANTALUM 1MF/16V
C802	1-135-333-11	s	CAPACITOR TANTALUM 1MF/16V
C803	1-164-156-11	s	CAPACITOR,CERAMIC 0.1MF/25V F
C804	1-162-962-11	s	CAPACITOR,CERAMIC 470PF/50V(B)
C805	1-162-959-11	s	CAPACITOR,CERAMIC 330PF/50V SL
C806	1-164-156-11	s	CAPACITOR,CERAMIC 0.1MF/25V F
C852	1-107-418-11	s	CAPACITOR,CHIP ELECT 10MF 35V
C853	1-107-418-11	s	CAPACITOR,CHIP ELECT 10MF 35V
C855	1-107-418-11	s	CAPACITOR,CHIP ELECT 10MF 35V
C856	1-107-418-11	s	CAPACITOR,CHIP ELECT 10MF 35V
C860	1-164-156-11	s	CAPACITOR,CERAMIC 0.1MF/25V F
C863	1-162-970-11	s	CAPACITOR CERAMIC 0.01MF/25V B
C864	1-164-156-11	s	CAPACITOR,CERAMIC 0.1MF/25V F
C865	1-164-156-11	s	CAPACITOR,CERAMIC 0.1MF/25V F
C866	1-164-156-11	s	CAPACITOR,CERAMIC 0.1MF/25V F

(AE-31 BOARD for MSW-A2000/P)

Ref. No. or Q'ty	Part No.	SP	Description
C867	1-164-156-11	s	CAPACITOR,CERAMIC 0.1MF/25V F
C868	1-164-156-11	s	CAPACITOR,CERAMIC 0.1MF/25V F
C869	1-164-156-11	s	CAPACITOR,CERAMIC 0.1MF/25V F
CN100	1-691-550-11	s	PIN,CONNECTOR (3P)(SMD)(1.5MM)
CN200	1-573-290-21	s	PIN,CONNECTOR (4P)(SMD)(1.5MM)
CN600	1-573-768-21	o	PIN, CONNECTOR(5P)(SMD)(1.5MM)
CN800	1-580-547-11	o	PIN, CONNECTOR (PC BOARD) 36P
D400	8-719-820-41	s	DIODE 1SS302
D500	8-719-157-11	s	DIODE RD3.3M-B
D800	8-719-404-35	s	DIODE MA141WK
D801	8-719-404-35	s	DIODE MA141WK
D802	8-719-404-35	s	DIODE MA141WK
D850	8-719-941-04	s	DIODE SB007-03CP
D851	8-719-941-04	s	DIODE SB007-03CP
IC100	8-759-711-85	s	IC NJM4580E-D
IC102	8-759-711-85	s	IC NJM4580E-D
IC103	8-759-711-85	s	IC NJM4580E-D
IC104	8-759-711-85	s	IC NJM4580E-D
IC200	8-759-711-85	s	IC NJM4580E-D
IC201	8-759-711-85	s	IC NJM4580E-D
IC202	8-759-711-85	s	IC NJM4580E-D
IC203	8-759-711-85	s	IC NJM4580E-D
IC300	8-759-711-85	s	IC NJM4580E-D
IC301	8-759-711-85	s	IC NJM4580E-D
IC400	8-759-711-85	s	IC NJM4580E-D
IC401	8-759-711-85	s	IC NJM4580E-D
IC500	8-759-144-72	s	IC UPC358G2-E2
IC700	8-759-711-85	s	IC NJM4580E-D
IC701	8-759-711-85	s	IC NJM4580E-D
IC702	8-759-711-85	s	IC NJM4580E-D
IC800	8-759-271-86	s	IC TC7SH04FU
IC801	8-759-271-86	s	IC TC7SH04FU
IC854	8-759-642-22	s	IC UPC29M05T-E2
IC855	8-759-539-89	s	IC LM2990SX-5.0
IC857	8-759-271-86	s	IC TC7SH04FU
IC858	8-759-570-08	s	IC TC7SET32FU(TE85R)
IC859	8-759-570-08	s	IC TC7SET32FU(TE85R)
IC860	8-759-570-08	s	IC TC7SET32FU(TE85R)
IC861	8-759-570-08	s	IC TC7SET32FU(TE85R)
IC862	8-759-570-08	s	IC TC7SET32FU(TE85R)
IC863	8-759-271-86	s	IC TC7SH04FU
L500	1-408-785-21	s	CHIP INDUCTOR 47UH (4532)
L600	1-408-785-21	s	CHIP INDUCTOR 47UH (4532)
L850	1-415-942-11	s	COIL, CHOKE 220UH
L851	1-415-942-11	s	COIL, CHOKE 220UH
LV400	1-410-853-21	s	COIL, VARIABLE
LV600	1-414-007-11	s	COIL, VARIABLE
PS850	⚠ 1-533-282-21	s	CIRCUIT PROTECTOR 2A (3225)
PS851	⚠ 1-533-282-21	s	CIRCUIT PROTECTOR 2A (3225)
PS852	⚠ 1-533-282-21	s	CIRCUIT PROTECTOR 2A (3225)
Q100	8-729-220-93	s	TRANSISTOR 2SK209-G
Q101	8-729-209-07	s	TRANSISTOR 2SC4213-B
Q102	8-729-209-07	s	TRANSISTOR 2SC4213-B
Q103	8-729-209-07	s	TRANSISTOR 2SC4213-B
Q104	8-729-209-07	s	TRANSISTOR 2SC4213-B
Q105	8-729-220-93	s	TRANSISTOR 2SK209-G

(AE-31 BOARD for MSW-A2000/P)

Ref. No. or Q'ty	Part No.	SP	Description
Q200	8-729-209-07	s	TRANSISTOR 2SC4213-B
Q201	8-729-209-07	s	TRANSISTOR 2SC4213-B
Q202	8-729-220-93	s	TRANSISTOR 2SK209-G
Q203	8-729-220-93	s	TRANSISTOR 2SK209-G
Q204	8-729-220-93	s	TRANSISTOR 2SK209-G
Q205	8-729-209-07	s	TRANSISTOR 2SC4213-B
Q206	8-729-209-07	s	TRANSISTOR 2SC4213-B
Q207	8-729-209-07	s	TRANSISTOR 2SC4213-B
Q208	8-729-209-07	s	TRANSISTOR 2SC4213-B
Q400	8-729-209-07	s	TRANSISTOR 2SC4213-B
Q401	8-729-105-37	s	TRANSISTOR 2SC3360
Q402	8-729-105-37	s	TRANSISTOR 2SC3360
Q403	8-729-105-37	s	TRANSISTOR 2SC3360
Q404	8-729-105-37	s	TRANSISTOR 2SC3360
Q500	8-729-028-73	s	TRANSISTOR DTA114EUA-T106
Q501	8-729-907-00	s	TRANSISTOR DTC114EU
Q502	8-729-140-63	s	TRANSISTOR 2SA1611-M5M6
Q503	8-729-014-93	s	TRANSISTOR 2SB1440S-TX
Q504	8-729-209-07	s	TRANSISTOR 2SC4213-B
Q505	8-729-209-07	s	TRANSISTOR 2SC4213-B
Q600	8-729-028-91	s	TRANSISTOR DTA144EUA-T106
Q601	8-729-140-63	s	TRANSISTOR 2SA1611-M5M6
Q602	8-729-029-14	s	TRANSISTOR DTC144EUA-T106
Q603	8-729-824-34	s	TRANSISTOR 2SJ187
Q605	8-729-141-75	s	TRANSISTOR 2SD596DV345
Q606	8-729-141-75	s	TRANSISTOR 2SD596DV345
Q700	8-729-209-07	s	TRANSISTOR 2SC4213-B
Q701	8-729-209-07	s	TRANSISTOR 2SC4213-B
Q800	8-729-029-14	s	TRANSISTOR DTC144EUA-T106
Q801	8-729-028-91	s	TRANSISTOR DTA144EUA-T106
Q802	8-729-105-08	s	TRANSISTOR 2SA1330-06
Q803	8-729-028-91	s	TRANSISTOR DTA144EUA-T106
Q804	8-729-028-91	s	TRANSISTOR DTA144EUA-T106
Q805	8-729-028-91	s	TRANSISTOR DTA144EUA-T106
Q806	8-729-029-14	s	TRANSISTOR DTC144EUA-T106
Q850	8-729-029-14	s	TRANSISTOR DTC144EUA-T106
Q851	8-729-029-14	s	TRANSISTOR DTC144EUA-T106
R100	1-218-716-11	s	RESISTOR,CHIP 10K 1/16W(1608)
R101	1-218-716-11	s	RESISTOR,CHIP 10K 1/16W(1608)
R102	1-218-666-11	s	RESISTOR,CHIP 82 1/16W (1608)
R103	1-218-738-11	s	RESISTOR,CHIP 82K 1/16W(1608)
R104	1-218-740-11	s	RESISTOR,CHIP 100K 1/16W(1608)
R105	1-216-864-11	s	RESISTOR,CHIP 0 1/16W (1608)
R106	1-218-696-11	s	RESISTOR,CHIP 1.5K 1/16W(1608)
R107	1-218-752-11	s	RESISTOR,CHIP 330K 1/16W(1608)
R108	1-218-752-11	s	RESISTOR,CHIP 330K 1/16W(1608)
R109	1-218-700-11	s	RESISTOR,CHIP 2.2K 1/16W(1608)
R110	1-218-714-11	s	RESISTOR,CHIP 8.2K 1/16W(1608)
R111	1-218-708-11	s	RESISTOR,CHIP 4.7K 1/16W(1608)
R112	1-218-708-11	s	RESISTOR,CHIP 4.7K 1/16W(1608)
R113	1-218-708-11	s	RESISTOR,CHIP 4.7K 1/16W(1608)
R114	1-218-716-11	s	RESISTOR,CHIP 10K 1/16W(1608)
R115	1-218-708-11	s	RESISTOR,CHIP 4.7K 1/16W(1608)
R116	1-218-716-11	s	RESISTOR,CHIP 10K 1/16W(1608)
R117	1-218-700-11	s	RESISTOR,CHIP 2.2K 1/16W(1608)
R118	1-218-714-11	s	RESISTOR,CHIP 8.2K 1/16W(1608)
R119	1-218-732-11	s	RESISTOR,CHIP 47K 1/16W(1608)
R120	1-218-716-11	s	RESISTOR,CHIP 10K 1/16W(1608)

(AE-31 BOARD for MSW-A2000/P)

Ref. No. or Q'ty	Part No.	SP	Description
R121	1-218-740-11	s	RESISTOR,CHIP 100K 1/16W(1608)
R122	1-218-752-11	s	RESISTOR,CHIP 330K 1/16W(1608)
R123	1-218-726-11	s	RESISTOR CHIP 27K 1/16W (1608)
R124	1-218-732-11	s	RESISTOR,CHIP 47K 1/16W(1608)
R125	1-218-724-11	s	RESISTOR,CHIP 22K 1/16W(1608)
R127	1-218-716-11	s	RESISTOR,CHIP 10K 1/16W(1608)
R128	1-218-700-11	s	RESISTOR,CHIP 2.2K 1/16W(1608)
R129	1-218-724-11	s	RESISTOR,CHIP 22K 1/16W(1608)
R130	1-218-716-11	s	RESISTOR,CHIP 10K 1/16W(1608)
R131	1-218-700-11	s	RESISTOR,CHIP 2.2K 1/16W(1608)
R132	1-218-716-11	s	RESISTOR,CHIP 10K 1/16W(1608)
R133	1-218-716-11	s	RESISTOR,CHIP 10K 1/16W(1608)
R134	1-218-692-11	s	RESISTOR,CHIP 1.0K 1/16W(1608)
R135	1-218-717-11	s	RESISTOR,CHIP 11K 1/16W (1608)
R136	1-218-724-11	s	RESISTOR,CHIP 22K 1/16W(1608)
R137	1-218-724-11	s	RESISTOR,CHIP 22K 1/16W(1608)
R138	1-216-864-11	s	RESISTOR,CHIP 0 1/16W (1608)
R139	1-216-864-11	s	RESISTOR,CHIP 0 1/16W (1608)
R140	1-218-752-11	s	RESISTOR,CHIP 330K 1/16W(1608)
R200	1-218-716-11	s	RESISTOR,CHIP 10K 1/16W(1608)
R201	1-218-644-11	s	RESISTOR,CHIP 10 1/16W
R203	1-218-716-11	s	RESISTOR,CHIP 10K 1/16W(1608)
R205	1-218-716-11	s	RESISTOR,CHIP 10K 1/16W(1608)
R210	1-218-716-11	s	RESISTOR,CHIP 10K 1/16W(1608)
R212	1-218-666-11	s	RESISTOR,CHIP 82 1/16W (1608)
R215	1-218-738-11	s	RESISTOR,CHIP 82K 1/16W(1608)
R216	1-218-740-11	s	RESISTOR,CHIP 100K 1/16W(1608)
R218	1-216-864-11	s	RESISTOR,CHIP 0 1/16W (1608)
R220	1-218-696-11	s	RESISTOR,CHIP 1.5K 1/16W(1608)
R221	1-216-864-11	s	RESISTOR,CHIP 0 1/16W (1608)
R222	1-218-752-11	s	RESISTOR,CHIP 330K 1/16W(1608)
R223	1-218-752-11	s	RESISTOR,CHIP 330K 1/16W(1608)
R224	1-218-752-11	s	RESISTOR,CHIP 330K 1/16W(1608)
R225	1-218-700-11	s	RESISTOR,CHIP 2.2K 1/16W(1608)
R226	1-218-714-11	s	RESISTOR,CHIP 8.2K 1/16W(1608)
R227	1-218-708-11	s	RESISTOR,CHIP 4.7K 1/16W(1608)
R228	1-218-708-11	s	RESISTOR,CHIP 4.7K 1/16W(1608)
R229	1-218-708-11	s	RESISTOR,CHIP 4.7K 1/16W(1608)
R230	1-218-716-11	s	RESISTOR,CHIP 10K 1/16W(1608)
R231	1-218-708-11	s	RESISTOR,CHIP 4.7K 1/16W(1608)
R232	1-218-716-11	s	RESISTOR,CHIP 10K 1/16W(1608)
R233	1-218-700-11	s	RESISTOR,CHIP 2.2K 1/16W(1608)
R234	1-218-714-11	s	RESISTOR,CHIP 8.2K 1/16W(1608)
R235	1-218-732-11	s	RESISTOR,CHIP 47K 1/16W(1608)
R236	1-218-716-11	s	RESISTOR,CHIP 10K 1/16W(1608)
R237	1-218-744-11	s	RESISTOR,CHIP 150K 1/16W
R238	1-218-744-11	s	RESISTOR,CHIP 150K 1/16W
R239	1-218-740-11	s	RESISTOR,CHIP 100K 1/16W(1608)
R240	1-218-740-11	s	RESISTOR,CHIP 100K 1/16W(1608)
R241	1-218-724-11	s	RESISTOR,CHIP 22K 1/16W(1608)
R242	1-218-716-11	s	RESISTOR,CHIP 10K 1/16W(1608)
R243	1-218-716-11	s	RESISTOR,CHIP 10K 1/16W(1608)
R244	1-218-716-11	s	RESISTOR,CHIP 10K 1/16W(1608)
R245	1-218-724-11	s	RESISTOR,CHIP 22K 1/16W(1608)
R246	1-218-716-11	s	RESISTOR,CHIP 10K 1/16W(1608)
R247	1-218-716-11	s	RESISTOR,CHIP 10K 1/16W(1608)
R248	1-218-716-11	s	RESISTOR,CHIP 10K 1/16W(1608)
R249	1-218-692-11	s	RESISTOR,CHIP 1.0K 1/16W(1608)
R250	1-218-717-11	s	RESISTOR,CHIP 11K 1/16W (1608)

(AE-31 BOARD for MSW-A2000/P)

Ref. No. or Q'ty	Part No.	SP	Description
R251	1-218-724-11	s	RESISTOR,CHIP 22K 1/16W(1608)
R252	1-218-724-11	s	RESISTOR,CHIP 22K 1/16W(1608)
R253	1-216-864-11	s	RESISTOR,CHIP 0 1/16W (1608)
R254	1-216-864-11	s	RESISTOR,CHIP 0 1/16W (1608)
R300	1-218-700-11	s	RESISTOR,CHIP 2.2K 1/16W(1608)
R301	1-218-714-11	s	RESISTOR,CHIP 8.2K 1/16W(1608)
R302	1-218-716-11	s	RESISTOR,CHIP 10K 1/16W(1608)
R303	1-218-692-11	s	RESISTOR,CHIP 1.0K 1/16W(1608)
R304	1-218-717-11	s	RESISTOR,CHIP 11K 1/16W (1608)
R305	1-218-724-11	s	RESISTOR,CHIP 22K 1/16W(1608)
R306	1-218-724-11	s	RESISTOR,CHIP 22K 1/16W(1608)
R307	1-216-864-11	s	RESISTOR,CHIP 0 1/16W (1608)
R308	1-216-864-11	s	RESISTOR,CHIP 0 1/16W (1608)
R400	1-218-716-11	s	RESISTOR,CHIP 10K 1/16W(1608)
R401	1-218-716-11	s	RESISTOR,CHIP 10K 1/16W(1608)
R402	1-218-708-11	s	RESISTOR,CHIP 4.7K 1/16W(1608)
R403	1-218-708-11	s	RESISTOR,CHIP 4.7K 1/16W(1608)
R404	1-218-716-11	s	RESISTOR,CHIP 10K 1/16W(1608)
R405	1-218-716-11	s	RESISTOR,CHIP 10K 1/16W(1608)
R406	1-218-684-11	s	RESISTOR,CHIP 470 1/16W (1608)
R407	1-218-716-11	s	RESISTOR,CHIP 10K 1/16W(1608)
R408	1-218-710-11	s	RESISTOR,CHIP 5.6K 1/16W(1608)
R409	1-218-738-11	s	RESISTOR,CHIP 82K 1/16W(1608)
R410	1-218-704-11	s	RESISTOR,CHIP 3.3K 1/16W(1608)
R411	1-218-686-11	s	RESISTOR CHIP 560 1/16W (1608)
R412	1-218-740-11	s	RESISTOR,CHIP 100K 1/16W(1608)
R413	1-218-690-11	s	RESISTOR,CHIP 820 1/16W (1608)
R414	1-218-690-11	s	RESISTOR,CHIP 820 1/16W (1608)
R415	1-218-740-11	s	RESISTOR,CHIP 100K 1/16W(1608)
R416	1-218-708-11	s	RESISTOR,CHIP 4.7K 1/16W(1608)
R417	1-218-690-11	s	RESISTOR,CHIP 820 1/16W (1608)
R418	1-218-690-11	s	RESISTOR,CHIP 820 1/16W (1608)
R500	1-218-706-11	s	RESISTOR,CHIP 3.9K 1/16W(1608)
R501	1-218-708-11	s	RESISTOR,CHIP 4.7K 1/16W(1608)
R502	1-218-716-11	s	RESISTOR,CHIP 10K 1/16W(1608)
R503	1-218-724-11	s	RESISTOR,CHIP 22K 1/16W(1608)
R504	1-218-692-11	s	RESISTOR,CHIP 1.0K 1/16W(1608)
R505	1-218-724-11	s	RESISTOR,CHIP 22K 1/16W(1608)
R506	1-218-692-11	s	RESISTOR,CHIP 1.0K 1/16W(1608)
R507	1-218-716-11	s	RESISTOR,CHIP 10K 1/16W(1608)
R508	1-218-716-11	s	RESISTOR,CHIP 10K 1/16W(1608)
R509	1-218-732-11	s	RESISTOR,CHIP 47K 1/16W(1608)
R510	1-218-732-11	s	RESISTOR,CHIP 47K 1/16W(1608)
R511	1-216-298-00	s	RESISTOR,CHIP 2.2 1/10(2012)
R512	1-216-298-00	s	RESISTOR,CHIP 2.2 1/10(2012)
R513	1-218-732-11	s	RESISTOR,CHIP 47K 1/16W(1608)
R600	1-218-684-11	s	RESISTOR,CHIP 470 1/16W (1608)
R601	1-218-734-11	s	RESISTOR,CHIP 56K 1/16W(1608)
R602	1-218-734-11	s	RESISTOR,CHIP 56K 1/16W(1608)
R603	1-218-716-11	s	RESISTOR,CHIP 10K 1/16W(1608)
R604	1-218-724-11	s	RESISTOR,CHIP 22K 1/16W(1608)
R605	1-218-724-11	s	RESISTOR,CHIP 22K 1/16W(1608)
R606	1-216-298-00	s	RESISTOR,CHIP 2.2 1/10(2012)
R607	1-216-298-00	s	RESISTOR,CHIP 2.2 1/10(2012)
R608	1-218-236-91	s	RESISTOR,CHIP 1 1/4W
R609	1-218-732-11	s	RESISTOR,CHIP 47K 1/16W(1608)
R610	1-218-732-11	s	RESISTOR,CHIP 47K 1/16W(1608)
R700	1-218-716-11	s	RESISTOR,CHIP 10K 1/16W(1608)
R701	1-218-716-11	s	RESISTOR,CHIP 10K 1/16W(1608)

(AE-31 BOARD for MSW-A2000/P)

Ref. No. or Q'ty	Part No.	SP	Description
R702	1-218-708-11	s	RESISTOR,CHIP 4.7K 1/16W(1608)
R703	1-218-708-11	s	RESISTOR,CHIP 4.7K 1/16W(1608)
R704	1-218-752-11	s	RESISTOR,CHIP 330K 1/16W(1608)
R705	1-218-752-11	s	RESISTOR,CHIP 330K 1/16W(1608)
R706	1-218-644-11	s	RESISTOR,CHIP 10 1/16W
R707	1-218-644-11	s	RESISTOR,CHIP 10 1/16W
R708	1-218-732-11	s	RESISTOR,CHIP 47K 1/16W(1608)
R709	1-218-732-11	s	RESISTOR,CHIP 47K 1/16W(1608)
R710	1-218-708-11	s	RESISTOR,CHIP 4.7K 1/16W(1608)
R711	1-218-708-11	s	RESISTOR,CHIP 4.7K 1/16W(1608)
R712	1-218-716-11	s	RESISTOR,CHIP 10K 1/16W(1608)
R713	1-218-716-11	s	RESISTOR,CHIP 10K 1/16W(1608)
R714	1-218-752-11	s	RESISTOR,CHIP 330K 1/16W(1608)
R715	1-218-752-11	s	RESISTOR,CHIP 330K 1/16W(1608)
R716	1-218-716-11	s	RESISTOR,CHIP 10K 1/16W(1608)
R717	1-218-716-11	s	RESISTOR,CHIP 10K 1/16W(1608)
R800	1-218-740-11	s	RESISTOR,CHIP 100K 1/16W(1608)
R801	1-218-740-11	s	RESISTOR,CHIP 100K 1/16W(1608)
R802	1-218-740-11	s	RESISTOR,CHIP 100K 1/16W(1608)
R803	1-218-724-11	s	RESISTOR,CHIP 22K 1/16W(1608)
R804	1-218-732-11	s	RESISTOR,CHIP 47K 1/16W(1608)
R805	1-218-732-11	s	RESISTOR,CHIP 47K 1/16W(1608)
R806	1-218-732-11	s	RESISTOR,CHIP 47K 1/16W(1608)
R808	1-216-864-11	s	RESISTOR,CHIP 0 1/16W (1608)
R853	1-218-732-11	s	RESISTOR,CHIP 47K 1/16W(1608)
R857	1-218-708-11	s	RESISTOR,CHIP 4.7K 1/16W(1608)
R858	1-218-708-11	s	RESISTOR,CHIP 4.7K 1/16W(1608)
R859	1-218-732-11	s	RESISTOR,CHIP 47K 1/16W(1608)
R861	1-216-864-11	s	RESISTOR,CHIP 0 1/16W (1608)
RV100	1-237-039-11	s	RESISTOR,ADJ,CERMET 100K
RV101	1-237-035-11	s	RESISTOR,ADJ,CERMET 5K
RV102	1-237-034-11	s	RESISTOR,ADJ,CERMET 2K
RV103	1-237-037-11	s	RESISTOR,ADJ,CERMET 20K
RV200	1-237-039-11	s	RESISTOR,ADJ,CERMET 100K
RV201	1-237-035-11	s	RESISTOR,ADJ,CERMET 5K
RV202	1-237-034-11	s	RESISTOR,ADJ,CERMET 2K
RV203	1-237-035-11	s	RESISTOR,ADJ,CERMET 5K
RV204	1-237-037-11	s	RESISTOR,ADJ,CERMET 20K
RV205	1-237-035-11	s	RESISTOR,ADJ,CERMET 5K
RV300	1-237-037-11	s	RESISTOR,ADJ,CERMET 20K
RV400	1-237-034-11	s	RESISTOR,ADJ,CERMET 2K
RV401	1-237-037-11	s	RESISTOR,ADJ,CERMET 20K
RV500	1-237-035-11	s	RESISTOR,ADJ,CERMET 5K
RV700	1-237-036-11	s	RESISTOR, ADJ,CERMET 10K
RV701	1-237-036-11	s	RESISTOR, ADJ,CERMET 10K
RV702	1-237-033-11	s	RESISTOR,ADJ,CERMET 1K
RV703	1-237-033-11	s	RESISTOR,ADJ,CERMET 1K
S100	1-692-881-41	s	SWITCH, SLIDE
S200	1-692-881-41	s	SWITCH, SLIDE
T500	1-433-326-11	s	TRANSFORMER,BIAS OSCILLATION
T600	1-424-511-11	s	TRANSFORMER,FE

AE-31H BOARD [SUFFIX 21]

---

*N: [Lot No. 261 - 334] HDW-2000, A2100, M2000, M2100
MSW-M2000, M2100
*P: [Lot No. 261 - 334] HDW-M2000P, M2100P
MSW-M2000P, M2100P

Ref. No. or Q'ty	Part No.	SP	Description
1pc	*N A-8327-127-A	o	MOUNTED CIRCUIT BOARD, AE-31H
	*P A-8327-672-A	o	MOUNTED CIRCUIT BOARD, AE-31HP
2pcs	3-701-832-00	o	HINGE, CIRCUIT BOARD
C100	*N 1-164-315-11	s	CAPACITOR,CERAMIC 470PF/50V CH
	*P 1-115-414-11	s	CAPACITOR,CHIP CERAMIC 820PF
C101	1-162-927-11	s	CAPACITOR,CERAMIC 100PF/50V CH
C102	1-164-230-11	s	CAPACITOR,CERAMIC 220PF/50V
C103	1-119-750-11	s	CAPACITOR,TANTALUM 22MF/6.3V
C104	1-127-951-11	s	CAPACITOR,CHIP FILM 0.015MF
C105	1-110-569-11	s	CAPACITOR,TANTALUM 47MF/6.3V
C106	1-164-230-11	s	CAPACITOR,CERAMIC 220PF/50V
C107	1-115-154-11	s	CAPACITOR ELECT 10MF/16V(BP)
C108	1-164-218-11	s	CAPACITOR,CERAMIC 180PF/50V CH
C109	1-104-851-11	s	CAPACITOR,TANTALUM 10MF/10V
C110	1-127-949-21	s	CAPACITOR,FILM 0.0068MF/16V
C111	1-115-414-11	s	CAPACITOR,CHIP CERAMIC 820PF
C112	1-104-851-11	s	CAPACITOR,TANTALUM 10MF/10V
C113	1-104-851-11	s	CAPACITOR,TANTALUM 10MF/10V
C114	1-104-851-11	s	CAPACITOR,TANTALUM 10MF/10V
C115	1-127-955-11	s	CAPACITOR,FILM 0.068MF (3225)
C116	1-162-923-11	s	CAPACITOR,CERAMIC 47PF/50V CH
C117	1-127-952-11	s	CAPACITOR,FILM 0.022MF (3216)
C118	1-127-952-11	s	CAPACITOR,FILM 0.022MF (3216)
C119	1-127-952-11	s	CAPACITOR,FILM 0.022MF (3216)
C120	1-127-952-11	s	CAPACITOR,FILM 0.022MF (3216)
C121	1-162-919-11	s	CAPACITOR,CERAMIC 22PF/50V CH
C122	1-127-966-11	s	CAPACITOR,FILM 0.0015MF (2012)
C123	1-162-919-11	s	CAPACITOR,CERAMIC 22PF/50V CH
C124	1-162-919-11	s	CAPACITOR,CERAMIC 22PF/50V CH
C125	1-115-154-11	s	CAPACITOR ELECT 10MF/16V(BP)
C126	1-115-154-11	s	CAPACITOR ELECT 10MF/16V(BP)
C127	1-164-156-11	s	CAPACITOR,CERAMIC 0.1MF/25V F
C128	1-164-156-11	s	CAPACITOR,CERAMIC 0.1MF/25V F
C201	*N 1-164-315-11	s	CAPACITOR,CERAMIC 470PF/50V CH
	*P 1-115-412-11	s	CAPACITOR,CERAMIC 680PF/25V CH
C202	1-162-927-11	s	CAPACITOR,CERAMIC 100PF/50V CH
C203	1-164-230-11	s	CAPACITOR,CERAMIC 220PF/50V
C204	1-119-750-11	s	CAPACITOR,TANTALUM 22MF/6.3V
C205	1-127-951-11	s	CAPACITOR,CHIP FILM 0.015MF
C206	1-110-569-11	s	CAPACITOR,TANTALUM 47MF/6.3V
C207	1-164-230-11	s	CAPACITOR,CERAMIC 220PF/50V
C208	1-115-154-11	s	CAPACITOR ELECT 10MF/16V(BP)
C209	1-164-218-11	s	CAPACITOR,CERAMIC 180PF/50V CH
C210	1-104-851-11	s	CAPACITOR,TANTALUM 10MF/10V
C211	1-127-949-21	s	CAPACITOR,FILM 0.0068MF/16V
C212	1-115-414-11	s	CAPACITOR,CHIP CERAMIC 820PF
C213	1-104-851-11	s	CAPACITOR,TANTALUM 10MF/10V
C214	1-104-851-11	s	CAPACITOR,TANTALUM 10MF/10V
C215	1-104-851-11	s	CAPACITOR,TANTALUM 10MF/10V
C216	1-127-955-11	s	CAPACITOR,FILM 0.068MF (3225)
C217	1-162-923-11	s	CAPACITOR,CERAMIC 47PF/50V CH
C218	1-127-952-11	s	CAPACITOR,FILM 0.022MF (3216)
C219	1-127-952-11	s	CAPACITOR,FILM 0.022MF (3216)
C220	1-127-952-11	s	CAPACITOR,FILM 0.022MF (3216)
C221	1-127-952-11	s	CAPACITOR,FILM 0.022MF (3216)

(AE-31H BOARD [SUFFIX 21])

Ref. No. or Q'ty	Part No.	SP	Description
C222	1-162-919-11	s	CAPACITOR,CERAMIC 22PF/50V CH
C223	1-127-966-11	s	CAPACITOR,FILM 0.0015MF (2012)
C224	1-162-919-11	s	CAPACITOR,CERAMIC 22PF/50V CH
C225	1-162-919-11	s	CAPACITOR,CERAMIC 22PF/50V CH
C226	1-115-154-11	s	CAPACITOR ELECT 10MF/16V(BP)
C227	1-115-154-11	s	CAPACITOR ELECT 10MF/16V(BP)
C228	1-115-154-11	s	CAPACITOR ELECT 10MF/16V(BP)
C300	1-162-923-11	s	CAPACITOR,CERAMIC 47PF/50V CH
C301	1-162-919-11	s	CAPACITOR,CERAMIC 22PF/50V CH
C302	1-162-919-11	s	CAPACITOR,CERAMIC 22PF/50V CH
C303	1-115-154-11	s	CAPACITOR ELECT 10MF/16V(BP)
C304	1-115-154-11	s	CAPACITOR ELECT 10MF/16V(BP)
C400	1-113-985-11	s	CAPACITOR,TANTALUM 10MF/20V
C401	1-127-947-11	s	CAPACITOR,FILM 0.0033MF (2012)
C402	1-127-978-11	s	CAPACITOR,FILM 0.01MF (2012)
C403	1-127-947-11	s	CAPACITOR,FILM 0.0033MF (2012)
C404	1-127-957-11	s	CAPACITOR,FILM 0.0056MF (2012)
C405	1-162-919-11	s	CAPACITOR,CERAMIC 22PF/50V CH
C406	1-127-953-11	s	CAPACITOR,FILM 0.033MF (3216)
C407	1-115-154-11	s	CAPACITOR ELECT 10MF/16V(BP)
C408	1-115-414-11	s	CAPACITOR,CHIP CERAMIC 820PF
C409	1-109-899-11	s	CAPACITOR,CHIP CERAMIC 330PF
C410	1-115-154-11	s	CAPACITOR ELECT 10MF/16V(BP)
C500	1-127-956-11	s	CAPACITOR,CHIP FILM 0.1MF
C501	1-164-230-11	s	CAPACITOR,CERAMIC 220PF/50V
C502	1-113-985-11	s	CAPACITOR,TANTALUM 10MF/20V
C503	1-115-416-11	s	CAPACITOR,CERAMIC 1000PF/25V
C504	1-115-416-11	s	CAPACITOR,CERAMIC 1000PF/25V
C505	1-119-751-11	s	CAPACITOR,TANTALUM 22MF/16V
C506	1-109-900-11	s	CAPACITOR, CHIP CERAMIC 470PF
C507	1-109-899-11	s	CAPACITOR,CHIP CERAMIC 330PF
C600	1-165-176-11	s	CAPACITOR,CERAMIC 47000PF/16V
C601	1-162-968-11	s	CAPACITOR,CERAMIC 4700PF/50V B
C602	1-162-968-11	s	CAPACITOR,CERAMIC 4700PF/50V B
C603	1-119-751-11	s	CAPACITOR,TANTALUM 22MF/16V
C604	1-109-897-11	s	CAPACITOR,CHIP CERAMIC 0.015MF
C605	1-109-898-11	s	CAPACITOR,CHIP CERAMIC 18000PF
C607	1-164-677-11	s	CAPACITOR,CERAMIC 0.033MF/16V
C608	1-164-156-11	s	CAPACITOR,CERAMIC 0.1MF/25V F
C700	1-107-826-11	s	CAPACITOR,CHIP CERAMIC 0.1MF
C701	1-107-826-11	s	CAPACITOR,CHIP CERAMIC 0.1MF
C702	1-110-563-11	s	CAPACITOR CERAMIC 0.068MF/16V
C703	1-110-563-11	s	CAPACITOR CERAMIC 0.068MF/16V
C704	1-104-851-11	s	CAPACITOR,TANTALUM 10MF/10V
C705	1-104-851-11	s	CAPACITOR,TANTALUM 10MF/10V
C706	1-135-333-11	s	CAPACITOR TANTALUM 1MF/16V
C707	1-135-333-11	s	CAPACITOR TANTALUM 1MF/16V
C800	1-135-333-11	s	CAPACITOR TANTALUM 1MF/16V
C801	1-135-333-11	s	CAPACITOR TANTALUM 1MF/16V
C804	1-162-962-11	s	CAPACITOR,CERAMIC 470PF/50V(B)
C805	1-162-959-11	s	CAPACITOR,CERAMIC 330PF/50V SL
C852	1-107-418-11	s	CAPACITOR,CHIP ELECT 10MF 35V
C853	1-107-418-11	s	CAPACITOR,CHIP ELECT 10MF 35V
C855	1-107-418-11	s	CAPACITOR,CHIP ELECT 10MF 35V
C856	1-107-418-11	s	CAPACITOR,CHIP ELECT 10MF 35V
C860	1-164-156-11	s	CAPACITOR,CERAMIC 0.1MF/25V F
C863	1-162-970-11	s	CAPACITOR CERAMIC 0.01MF/25V B
C864	1-164-156-11	s	CAPACITOR,CERAMIC 0.1MF/25V F
C865	1-164-156-11	s	CAPACITOR,CERAMIC 0.1MF/25V F

(AE-31H BOARD [SUFFIX 21])

Ref. No. or Q'ty	Part No.	SP	Description
C866	1-164-156-11	s	CAPACITOR,CERAMIC 0.1MF/25V F
C867	1-164-156-11	s	CAPACITOR,CERAMIC 0.1MF/25V F
C868	1-164-156-11	s	CAPACITOR,CERAMIC 0.1MF/25V F
C869	1-164-156-11	s	CAPACITOR,CERAMIC 0.1MF/25V F
CN100	1-691-550-11	s	PIN,CONNECTOR (3P)(SMD)(1.5MM)
CN200	1-573-290-21	s	PIN,CONNECTOR (4P)(SMD)(1.5MM)
CN600	1-573-768-21	o	PIN, CONNECTOR(5P)(SMD)(1.5MM)
CN800	1-580-547-11	o	PIN, CONNECTOR (PC BOARD) 36P
D400	8-719-820-41	s	DIODE 1SS302
D500	8-719-157-11	s	DIODE RD3.3M-B
D501	8-719-941-23	s	DIODE DA204U
D800	8-719-404-35	s	DIODE MA141WK
D801	8-719-404-35	s	DIODE MA141WK
D802	8-719-404-35	s	DIODE MA141WK
D850	8-719-941-04	s	DIODE SB007-03CP
D851	8-719-941-04	s	DIODE SB007-03CP
IC100	8-759-711-85	s	IC NJM4580E-D
IC102	8-759-711-85	s	IC NJM4580E-D
IC103	8-759-711-85	s	IC NJM4580E-D
IC104	8-759-711-85	s	IC NJM4580E-D
IC105	8-759-570-08	s	IC TC7SET32FU(TE85R)
IC106	8-759-570-08	s	IC TC7SET32FU(TE85R)
IC200	8-759-711-85	s	IC NJM4580E-D
IC201	8-759-711-85	s	IC NJM4580E-D
IC202	8-759-711-85	s	IC NJM4580E-D
IC203	8-759-711-85	s	IC NJM4580E-D
IC300	8-759-711-85	s	IC NJM4580E-D
IC301	8-759-711-85	s	IC NJM4580E-D
IC400	8-759-711-85	s	IC NJM4580E-D
IC401	8-759-711-85	s	IC NJM4580E-D
IC500	8-759-144-72	s	IC UPC358G2-E2
IC600	8-759-570-08	s	IC TC7SET32FU(TE85R)
IC700	8-759-711-85	s	IC NJM4580E-D
IC701	8-759-711-85	s	IC NJM4580E-D
IC702	8-759-711-85	s	IC NJM4580E-D
IC854	8-759-642-22	s	IC UPC29M05T-E2
IC855	8-759-539-89	s	IC LM2990SX-5.0
IC857	8-759-271-86	s	IC TC7SH04FU
IC858	8-759-271-86	s	IC TC7SH04FU
IC859	8-759-570-08	s	IC TC7SET32FU(TE85R)
IC860	8-759-570-08	s	IC TC7SET32FU(TE85R)
IC861	8-759-570-08	s	IC TC7SET32FU(TE85R)
IC862	8-759-570-08	s	IC TC7SET32FU(TE85R)
IC863	8-759-271-86	s	IC TC7SH04FU
L500	1-408-785-21	s	CHIP INDUCTOR 47UH (4532)
L600	1-408-785-21	s	CHIP INDUCTOR 47UH (4532)
L850	1-415-942-11	s	COIL, CHOKE 220UH
L851	1-415-942-11	s	COIL, CHOKE 220UH
LV400	1-410-853-21	s	COIL, VARIABLE
LV600	1-414-007-11	s	COIL, VARIABLE
PS850	⚠ 1-533-282-21	s	CIRCUIT PROTECTOR 2A (3225)
PS851	⚠ 1-533-282-21	s	CIRCUIT PROTECTOR 2A (3225)
PS852	⚠ 1-533-282-21	s	CIRCUIT PROTECTOR 2A (3225)
Q100	8-729-220-93	s	TRANSISTOR 2SK209-G
Q101	8-729-209-07	s	TRANSISTOR 2SC4213-B
Q102	8-729-209-07	s	TRANSISTOR 2SC4213-B
Q103	8-729-209-07	s	TRANSISTOR 2SC4213-B

(AE-31H BOARD [SUFFIX 21])

Ref. No. or Q'ty	Part No.	SP	Description
Q104	8-729-209-07	s	TRANSISTOR 2SC4213-B
Q105	8-729-220-93	s	TRANSISTOR 2SK209-G
Q200	8-729-209-07	s	TRANSISTOR 2SC4213-B
Q201	8-729-209-07	s	TRANSISTOR 2SC4213-B
Q202	8-729-220-93	s	TRANSISTOR 2SK209-G
Q203	8-729-220-93	s	TRANSISTOR 2SK209-G
Q204	8-729-220-93	s	TRANSISTOR 2SK209-G
Q205	8-729-209-07	s	TRANSISTOR 2SC4213-B
Q206	8-729-209-07	s	TRANSISTOR 2SC4213-B
Q207	8-729-209-07	s	TRANSISTOR 2SC4213-B
Q208	8-729-209-07	s	TRANSISTOR 2SC4213-B
Q400	8-729-209-07	s	TRANSISTOR 2SC4213-B
Q401	8-729-105-37	s	TRANSISTOR 2SC3360
Q402	8-729-105-37	s	TRANSISTOR 2SC3360
Q403	8-729-105-37	s	TRANSISTOR 2SC3360
Q404	8-729-105-37	s	TRANSISTOR 2SC3360
Q501	8-729-907-00	s	TRANSISTOR DTC114EU
Q502	8-729-140-63	s	TRANSISTOR 2SA1611-M5M6
Q503	8-729-014-93	s	TRANSISTOR 2SB1440S-TX
Q504	8-729-209-07	s	TRANSISTOR 2SC4213-B
Q505	8-729-209-07	s	TRANSISTOR 2SC4213-B
Q506	8-729-140-63	s	TRANSISTOR 2SA1611-M5M6
Q507	8-729-140-63	s	TRANSISTOR 2SA1611-M5M6
Q600	8-729-028-91	s	TRANSISTOR DTA144EUA-T106
Q602	8-729-029-14	s	TRANSISTOR DTC144EUA-T106
Q603	8-729-824-34	s	TRANSISTOR 2SJ187
Q605	8-729-141-75	s	TRANSISTOR 2SD596DV345
Q606	8-729-141-75	s	TRANSISTOR 2SD596DV345
Q607	8-729-028-91	s	TRANSISTOR DTA144EUA-T106
Q700	8-729-209-07	s	TRANSISTOR 2SC4213-B
Q701	8-729-209-07	s	TRANSISTOR 2SC4213-B
Q800	8-729-029-14	s	TRANSISTOR DTC144EUA-T106
Q801	8-729-028-91	s	TRANSISTOR DTA144EUA-T106
Q802	8-729-105-08	s	TRANSISTOR 2SA1330-06
Q803	8-729-028-91	s	TRANSISTOR DTA144EUA-T106
Q804	8-729-028-91	s	TRANSISTOR DTA144EUA-T106
Q805	8-729-028-91	s	TRANSISTOR DTA144EUA-T106
Q806	8-729-029-14	s	TRANSISTOR DTC144EUA-T106
Q850	8-729-029-14	s	TRANSISTOR DTC144EUA-T106
Q851	8-729-029-14	s	TRANSISTOR DTC144EUA-T106
R100	1-218-716-11	s	RESISTOR,CHIP 10K 1/16W(1608)
R101	1-218-716-11	s	RESISTOR,CHIP 10K 1/16W(1608)
R102	1-218-666-11	s	RESISTOR,CHIP 82 1/16W (1608)
R103	1-218-738-11	s	RESISTOR,CHIP 82K 1/16W(1608)
R104	1-218-740-11	s	RESISTOR,CHIP 100K 1/16W(1608)
R105	1-216-864-11	s	RESISTOR,CHIP 0 1/16W (1608)
R106	1-218-696-11	s	RESISTOR,CHIP 1.5K 1/16W(1608)
R107	1-218-752-11	s	RESISTOR,CHIP 330K 1/16W(1608)
R108	1-218-752-11	s	RESISTOR,CHIP 330K 1/16W(1608)
R109	1-218-700-11	s	RESISTOR,CHIP 2.2K 1/16W(1608)
R110	1-218-714-11	s	RESISTOR,CHIP 8.2K 1/16W(1608)
R111	1-218-708-11	s	RESISTOR,CHIP 4.7K 1/16W(1608)
R112	1-218-708-11	s	RESISTOR,CHIP 4.7K 1/16W(1608)
R113	1-218-708-11	s	RESISTOR,CHIP 4.7K 1/16W(1608)
R114	1-218-716-11	s	RESISTOR,CHIP 10K 1/16W(1608)
R115	1-218-708-11	s	RESISTOR,CHIP 4.7K 1/16W(1608)
R116	1-218-716-11	s	RESISTOR,CHIP 10K 1/16W(1608)
R117	1-218-700-11	s	RESISTOR,CHIP 2.2K 1/16W(1608)
R118	1-218-714-11	s	RESISTOR,CHIP 8.2K 1/16W(1608)

(AE-31H BOARD [SUFFIX 21])

Ref. No. or Q'ty	Part No.	SP	Description
R119	1-218-732-11	s	RESISTOR,CHIP 47K 1/16W(1608)
R120	1-218-716-11	s	RESISTOR,CHIP 10K 1/16W(1608)
R121	1-218-740-11	s	RESISTOR,CHIP 100K 1/16W(1608)
R122	1-218-752-11	s	RESISTOR,CHIP 330K 1/16W(1608)
R123	1-218-726-11	s	RESISTOR CHIP 27K 1/16W (1608)
R124	1-218-732-11	s	RESISTOR,CHIP 47K 1/16W(1608)
R125	1-218-724-11	s	RESISTOR,CHIP 22K 1/16W(1608)
R127	1-218-716-11	s	RESISTOR,CHIP 10K 1/16W(1608)
R128	1-218-700-11	s	RESISTOR,CHIP 2.2K 1/16W(1608)
R129	1-218-724-11	s	RESISTOR,CHIP 22K 1/16W(1608)
R130	1-218-716-11	s	RESISTOR,CHIP 10K 1/16W(1608)
R131	1-218-700-11	s	RESISTOR,CHIP 2.2K 1/16W(1608)
R132	1-218-716-11	s	RESISTOR,CHIP 10K 1/16W(1608)
R133	1-218-716-11	s	RESISTOR,CHIP 10K 1/16W(1608)
R134	1-218-692-11	s	RESISTOR,CHIP 1.0K 1/16W(1608)
R135	1-218-717-11	s	RESISTOR,CHIP 11K 1/16W (1608)
R136	1-218-724-11	s	RESISTOR,CHIP 22K 1/16W(1608)
R137	1-218-724-11	s	RESISTOR,CHIP 22K 1/16W(1608)
R138	1-216-864-11	s	RESISTOR,CHIP 0 1/16W (1608)
R139	1-216-864-11	s	RESISTOR,CHIP 0 1/16W (1608)
R140	1-218-752-11	s	RESISTOR,CHIP 330K 1/16W(1608)
R200	1-218-716-11	s	RESISTOR,CHIP 10K 1/16W(1608)
R201	1-218-644-11	s	RESISTOR,CHIP 10 1/16W
R203	1-218-716-11	s	RESISTOR,CHIP 10K 1/16W(1608)
R205	1-218-716-11	s	RESISTOR,CHIP 10K 1/16W(1608)
R210	1-218-716-11	s	RESISTOR,CHIP 10K 1/16W(1608)
R212	1-218-666-11	s	RESISTOR,CHIP 82 1/16W (1608)
R215	1-218-738-11	s	RESISTOR,CHIP 82K 1/16W(1608)
R216	1-218-740-11	s	RESISTOR,CHIP 100K 1/16W(1608)
R218	1-216-864-11	s	RESISTOR,CHIP 0 1/16W (1608)
R220	1-218-696-11	s	RESISTOR,CHIP 1.5K 1/16W(1608)
R221	1-216-864-11	s	RESISTOR,CHIP 0 1/16W (1608)
R222	1-218-752-11	s	RESISTOR,CHIP 330K 1/16W(1608)
R223	1-218-752-11	s	RESISTOR,CHIP 330K 1/16W(1608)
R224	1-218-752-11	s	RESISTOR,CHIP 330K 1/16W(1608)
R225	1-218-700-11	s	RESISTOR,CHIP 2.2K 1/16W(1608)
R226	1-218-714-11	s	RESISTOR,CHIP 8.2K 1/16W(1608)
R227	1-218-708-11	s	RESISTOR,CHIP 4.7K 1/16W(1608)
R228	1-218-708-11	s	RESISTOR,CHIP 4.7K 1/16W(1608)
R229	1-218-708-11	s	RESISTOR,CHIP 4.7K 1/16W(1608)
R230	1-218-716-11	s	RESISTOR,CHIP 10K 1/16W(1608)
R231	1-218-708-11	s	RESISTOR,CHIP 4.7K 1/16W(1608)
R232	1-218-716-11	s	RESISTOR,CHIP 10K 1/16W(1608)
R233	1-218-700-11	s	RESISTOR,CHIP 2.2K 1/16W(1608)
R234	1-218-714-11	s	RESISTOR,CHIP 8.2K 1/16W(1608)
R235	1-218-732-11	s	RESISTOR,CHIP 47K 1/16W(1608)
R236	1-218-716-11	s	RESISTOR,CHIP 10K 1/16W(1608)
R237	1-218-744-11	s	RESISTOR,CHIP 150K 1/16W
R238	1-218-744-11	s	RESISTOR,CHIP 150K 1/16W
R239	1-218-740-11	s	RESISTOR,CHIP 100K 1/16W(1608)
R240	1-218-740-11	s	RESISTOR,CHIP 100K 1/16W(1608)
R241	1-218-724-11	s	RESISTOR,CHIP 22K 1/16W(1608)
R242	1-218-716-11	s	RESISTOR,CHIP 10K 1/16W(1608)
R243	1-218-716-11	s	RESISTOR,CHIP 10K 1/16W(1608)
R244	1-218-716-11	s	RESISTOR,CHIP 10K 1/16W(1608)
R245	1-218-724-11	s	RESISTOR,CHIP 22K 1/16W(1608)
R246	1-218-716-11	s	RESISTOR,CHIP 10K 1/16W(1608)
R247	1-218-716-11	s	RESISTOR,CHIP 10K 1/16W(1608)
R248	1-218-716-11	s	RESISTOR,CHIP 10K 1/16W(1608)

(AE-31H BOARD [SUFFIX 21])

Ref. No. or Q'ty	Part No.	SP	Description
R249	1-218-692-11	s	RESISTOR,CHIP 1.0K 1/16W(1608)
R250	1-218-717-11	s	RESISTOR,CHIP 11K 1/16W (1608)
R251	1-218-724-11	s	RESISTOR,CHIP 22K 1/16W(1608)
R252	1-218-724-11	s	RESISTOR,CHIP 22K 1/16W(1608)
R253	1-216-864-11	s	RESISTOR,CHIP 0 1/16W (1608)
R254	1-216-864-11	s	RESISTOR,CHIP 0 1/16W (1608)
R300	1-218-700-11	s	RESISTOR,CHIP 2.2K 1/16W(1608)
R301	1-218-714-11	s	RESISTOR,CHIP 8.2K 1/16W(1608)
R302	1-218-716-11	s	RESISTOR,CHIP 10K 1/16W(1608)
R303	1-218-692-11	s	RESISTOR,CHIP 1.0K 1/16W(1608)
R304	1-218-717-11	s	RESISTOR,CHIP 11K 1/16W (1608)
R305	1-218-724-11	s	RESISTOR,CHIP 22K 1/16W(1608)
R306	1-218-724-11	s	RESISTOR,CHIP 22K 1/16W(1608)
R307	1-216-864-11	s	RESISTOR,CHIP 0 1/16W (1608)
R308	1-216-864-11	s	RESISTOR,CHIP 0 1/16W (1608)
R400	1-218-716-11	s	RESISTOR,CHIP 10K 1/16W(1608)
R401	1-218-716-11	s	RESISTOR,CHIP 10K 1/16W(1608)
R402	1-218-708-11	s	RESISTOR,CHIP 4.7K 1/16W(1608)
R403	1-218-708-11	s	RESISTOR,CHIP 4.7K 1/16W(1608)
R404	1-218-716-11	s	RESISTOR,CHIP 10K 1/16W(1608)
R405	1-218-716-11	s	RESISTOR,CHIP 10K 1/16W(1608)
R406	1-218-684-11	s	RESISTOR,CHIP 470 1/16W (1608)
R407	1-218-716-11	s	RESISTOR,CHIP 10K 1/16W(1608)
R408	1-218-710-11	s	RESISTOR,CHIP 5.6K 1/16W(1608)
R409	1-218-738-11	s	RESISTOR,CHIP 82K 1/16W(1608)
R410	1-218-704-11	s	RESISTOR,CHIP 3.3K 1/16W(1608)
R411	1-218-680-11	s	RESISTOR,CHIP 330 1/16W(1608)
R412	1-218-740-11	s	RESISTOR,CHIP 100K 1/16W(1608)
R413	1-218-690-11	s	RESISTOR,CHIP 820 1/16W (1608)
R414	1-218-690-11	s	RESISTOR,CHIP 820 1/16W (1608)
R415	1-218-740-11	s	RESISTOR,CHIP 100K 1/16W(1608)
R416	1-218-708-11	s	RESISTOR,CHIP 4.7K 1/16W(1608)
R417	1-218-690-11	s	RESISTOR,CHIP 820 1/16W (1608)
R418	1-218-690-11	s	RESISTOR,CHIP 820 1/16W (1608)
R500	1-218-706-11	s	RESISTOR,CHIP 3.9K 1/16W(1608)
R501	1-218-708-11	s	RESISTOR,CHIP 4.7K 1/16W(1608)
R502	1-218-716-11	s	RESISTOR,CHIP 10K 1/16W(1608)
R503	1-218-724-11	s	RESISTOR,CHIP 22K 1/16W(1608)
R504	1-218-692-11	s	RESISTOR,CHIP 1.0K 1/16W(1608)
R505	1-218-724-11	s	RESISTOR,CHIP 22K 1/16W(1608)
R506	1-218-692-11	s	RESISTOR,CHIP 1.0K 1/16W(1608)
R507	1-218-716-11	s	RESISTOR,CHIP 10K 1/16W(1608)
R508	1-218-716-11	s	RESISTOR,CHIP 10K 1/16W(1608)
R509	1-218-732-11	s	RESISTOR,CHIP 47K 1/16W(1608)
R510	1-218-732-11	s	RESISTOR,CHIP 47K 1/16W(1608)
R511	1-216-298-00	s	RESISTOR,CHIP 2.2 1/10(2012)
R512	1-216-298-00	s	RESISTOR,CHIP 2.2 1/10(2012)
R513	1-218-732-11	s	RESISTOR,CHIP 47K 1/16W(1608)
R514	1-218-708-11	s	RESISTOR,CHIP 4.7K 1/16W(1608)
R515	1-218-708-11	s	RESISTOR,CHIP 4.7K 1/16W(1608)
R601	1-218-734-11	s	RESISTOR,CHIP 56K 1/16W(1608)
R602	1-218-734-11	s	RESISTOR,CHIP 56K 1/16W(1608)
R604	1-218-724-11	s	RESISTOR,CHIP 22K 1/16W(1608)
R605	1-218-724-11	s	RESISTOR,CHIP 22K 1/16W(1608)
R606	1-216-298-00	s	RESISTOR,CHIP 2.2 1/10(2012)
R607	1-216-298-00	s	RESISTOR,CHIP 2.2 1/10(2012)
R608	1-218-236-91	s	RESISTOR,CHIP 1 1/4W
R609	1-218-732-11	s	RESISTOR,CHIP 47K 1/16W(1608)
R610	1-218-732-11	s	RESISTOR,CHIP 47K 1/16W(1608)

(AE-31H BOARD [SUFFIX 21])

Ref. No. or Q'ty	Part No.	SP	Description
R700	1-218-716-11	s	RESISTOR,CHIP 10K 1/16W(1608)
R701	1-218-716-11	s	RESISTOR,CHIP 10K 1/16W(1608)
R702	1-218-708-11	s	RESISTOR,CHIP 4.7K 1/16W(1608)
R703	1-218-708-11	s	RESISTOR,CHIP 4.7K 1/16W(1608)
R704	1-218-752-11	s	RESISTOR,CHIP 330K 1/16W(1608)
R705	1-218-752-11	s	RESISTOR,CHIP 330K 1/16W(1608)
R706	1-218-644-11	s	RESISTOR,CHIP 10 1/16W
R707	1-218-644-11	s	RESISTOR,CHIP 10 1/16W
R708	1-218-732-11	s	RESISTOR,CHIP 47K 1/16W(1608)
R709	1-218-732-11	s	RESISTOR,CHIP 47K 1/16W(1608)
R710	1-218-708-11	s	RESISTOR,CHIP 4.7K 1/16W(1608)
R711	1-218-708-11	s	RESISTOR,CHIP 4.7K 1/16W(1608)
R712	1-218-716-11	s	RESISTOR,CHIP 10K 1/16W(1608)
R713	1-218-716-11	s	RESISTOR,CHIP 10K 1/16W(1608)
R714	1-218-752-11	s	RESISTOR,CHIP 330K 1/16W(1608)
R715	1-218-752-11	s	RESISTOR,CHIP 330K 1/16W(1608)
R716	1-218-716-11	s	RESISTOR,CHIP 10K 1/16W(1608)
R717	1-218-716-11	s	RESISTOR,CHIP 10K 1/16W(1608)
R800	1-218-740-11	s	RESISTOR,CHIP 100K 1/16W(1608)
R801	1-218-732-11	s	RESISTOR,CHIP 47K 1/16W(1608)
R803	1-218-724-11	s	RESISTOR,CHIP 22K 1/16W(1608)
R804	1-218-732-11	s	RESISTOR,CHIP 47K 1/16W(1608)
R805	1-218-732-11	s	RESISTOR,CHIP 47K 1/16W(1608)
R806	1-218-732-11	s	RESISTOR,CHIP 47K 1/16W(1608)
R808	1-216-864-11	s	RESISTOR,CHIP 0 1/16W (1608)
R853	1-218-732-11	s	RESISTOR,CHIP 47K 1/16W(1608)
R857	1-218-708-11	s	RESISTOR,CHIP 4.7K 1/16W(1608)
R858	1-218-708-11	s	RESISTOR,CHIP 4.7K 1/16W(1608)
R859	1-218-732-11	s	RESISTOR,CHIP 47K 1/16W(1608)
R861	1-216-864-11	s	RESISTOR,CHIP 0 1/16W (1608)
RV100	1-237-039-11	s	RESISTOR,ADJ,CERMET 100K
RV101	1-237-035-11	s	RESISTOR,ADJ,CERMET 5K
RV102	1-237-034-11	s	RESISTOR,ADJ,CERMET 2K
RV103	1-237-037-11	s	RESISTOR,ADJ,CERMET 20K
RV200	1-237-039-11	s	RESISTOR,ADJ,CERMET 100K
RV201	1-237-035-11	s	RESISTOR,ADJ,CERMET 5K
RV202	1-237-034-11	s	RESISTOR,ADJ,CERMET 2K
RV203	1-237-035-11	s	RESISTOR,ADJ,CERMET 5K
RV204	1-237-037-11	s	RESISTOR,ADJ,CERMET 20K
RV205	1-237-035-11	s	RESISTOR,ADJ,CERMET 5K
RV300	1-237-037-11	s	RESISTOR,ADJ,CERMET 20K
RV400	1-237-034-11	s	RESISTOR,ADJ,CERMET 2K
RV401	1-237-037-11	s	RESISTOR,ADJ,CERMET 20K
RV500	1-237-035-11	s	RESISTOR,ADJ,CERMET 5K
RV700	1-237-036-11	s	RESISTOR, ADJ,CERMET 10K
RV701	1-237-036-11	s	RESISTOR, ADJ,CERMET 10K
RV702	1-237-033-11	s	RESISTOR,ADJ,CERMET 1K
RV703	1-237-033-11	s	RESISTOR,ADJ,CERMET 1K
S100	1-692-881-41	s	SWITCH, SLIDE
S200	1-692-881-41	s	SWITCH, SLIDE
T500	1-433-326-11	s	TRANSFORMER,BIAS OSCILLATION
T600	1-424-511-11	s	TRANSFORMER,FE

AE-31H BOARD [SUFFIX 22-]

---

*N: [Lot No. 341 -] HDW-2000, A2100, M2000, M2100
[Lot No. 4C2 -] HDW-D2000
[Lot No. 462 -] HDW-S2000
[Lot No. 434 -] DVW-2000, M2000
[Lot No. 341 -] MSW-A2000, M2000, M2100
[Lot No. 495 -] MSW-M2000E, M2100E
*P: [Lot No. 341 -] HDW-M2000P, M2100P
[Lot No. 462 -] HDW-S2000P
[Lot No. 434 -] DVW-2000P, M2000P
[Lot No. 341 -] MSW-A2000P, M2000P, M2100P
[Lot No. 495 -] MSW-M2000EP, M2100EP

Ref. No. or Q'ty	Part No.	SP	Description
1pc	*N A-8327-127-B	s	MOUNTED CIRCUIT BOARD, AE-31H
	*P A-8327-672-B	s	MOUNTED CIRCUIT BOARD, AE-31HP
2pcs	3-701-832-02	o	HINGE, CIRCUIT BOARD
C100	*N 1-164-315-11	s	CAPACITOR,CERAMIC 470PF/50V CH
	*P 1-115-414-11	s	CAPACITOR,CHIP CERAMIC 820PF
C101	1-162-927-11	s	CAPACITOR,CERAMIC 100PF/50V CH
C102	1-164-230-11	s	CAPACITOR,CERAMIC 220PF/50V
C103	1-131-661-11	s	CAPACITOR,ELECT 100MF/10V CHIP
C104	1-127-951-11	s	CAPACITOR,CHIP FILM 0.015MF
C106	1-164-230-11	s	CAPACITOR,CERAMIC 220PF/50V
C107	1-115-154-11	s	CAPACITOR ELECT 10MF/16V(BP)
C108	1-164-218-11	s	CAPACITOR,CERAMIC 180PF/50V CH
C109	1-137-710-91	s	CAPACITOR,CERAMIC 10MF B(2012)
C109	1-137-710-91	s	CAPACITOR,CERAMIC 10MF B(2012)
C110	1-127-949-21	s	CAPACITOR,FILM 0.0068MF/16V
C111	1-115-414-11	s	CAPACITOR,CHIP CERAMIC 820PF
C112	1-137-710-91	s	CAPACITOR,CERAMIC 10MF B(2012)
C113	1-137-710-91	s	CAPACITOR,CERAMIC 10MF B(2012)
C114	1-137-710-91	s	CAPACITOR,CERAMIC 10MF B(2012)
C115	1-127-955-11	s	CAPACITOR,FILM 0.068MF (3225)
C116	1-162-923-11	s	CAPACITOR,CERAMIC 47PF/50V CH
C117	1-127-952-11	s	CAPACITOR,FILM 0.022MF (3216)
C118	1-127-952-11	s	CAPACITOR,FILM 0.022MF (3216)
C119	1-127-952-11	s	CAPACITOR,FILM 0.022MF (3216)
C120	1-127-952-11	s	CAPACITOR,FILM 0.022MF (3216)
C121	1-162-919-11	s	CAPACITOR,CERAMIC 22PF/50V CH
C122	1-163-145-00	s	CAPACITOR,CHIP CERAMIC 1500PF
C123	1-162-919-11	s	CAPACITOR,CERAMIC 22PF/50V CH
C124	1-162-919-11	s	CAPACITOR,CERAMIC 22PF/50V CH
C125	1-115-154-11	s	CAPACITOR ELECT 10MF/16V(BP)
C126	1-115-154-11	s	CAPACITOR ELECT 10MF/16V(BP)
C127	1-107-826-11	s	CAPACITOR,CHIP CERAMIC 0.1MF
C128	1-107-826-11	s	CAPACITOR,CHIP CERAMIC 0.1MF
C201	*N 1-164-315-11	s	CAPACITOR,CERAMIC 470PF/50V CH
	*P 1-115-412-11	s	CAPACITOR,CERAMIC 680PF/25V CH
C202	1-162-927-11	s	CAPACITOR,CERAMIC 100PF/50V CH
C203	1-164-230-11	s	CAPACITOR,CERAMIC 220PF/50V
C204	1-131-661-11	s	CAPACITOR,ELECT 100MF/10V CHIP
C205	1-127-951-11	s	CAPACITOR,CHIP FILM 0.015MF
C207	1-164-230-11	s	CAPACITOR,CERAMIC 220PF/50V
C208	1-115-154-11	s	CAPACITOR ELECT 10MF/16V(BP)
C209	1-164-218-11	s	CAPACITOR,CERAMIC 180PF/50V CH
C210	1-137-710-91	s	CAPACITOR,CERAMIC 10MF B(2012)
C211	1-127-949-21	s	CAPACITOR,FILM 0.0068MF/16V
C212	1-115-414-11	s	CAPACITOR,CHIP CERAMIC 820PF
C213	1-137-710-91	s	CAPACITOR,CERAMIC 10MF B(2012)
C214	1-137-710-91	s	CAPACITOR,CERAMIC 10MF B(2012)
C215	1-137-710-91	s	CAPACITOR,CERAMIC 10MF B(2012)
C216	1-127-955-11	s	CAPACITOR,FILM 0.068MF (3225)
C217	1-162-923-11	s	CAPACITOR,CERAMIC 47PF/50V CH
C218	1-127-952-11	s	CAPACITOR,FILM 0.022MF (3216)

(AE-31H BOARD [SUFFIX 22-])

Ref. No. or Q'ty	Part No.	SP	Description
C219	1-127-952-11	s	CAPACITOR,FILM 0.022MF (3216)
C220	1-127-952-11	s	CAPACITOR,FILM 0.022MF (3216)
C221	1-127-952-11	s	CAPACITOR,FILM 0.022MF (3216)
C222	1-162-919-11	s	CAPACITOR,CERAMIC 22PF/50V CH
C223	1-163-145-00	s	CAPACITOR,CHIP CERAMIC 1500PF
C224	1-162-919-11	s	CAPACITOR,CERAMIC 22PF/50V CH
C225	1-162-919-11	s	CAPACITOR,CERAMIC 22PF/50V CH
C226	1-115-154-11	s	CAPACITOR ELECT 10MF/16V(BP)
C227	1-115-154-11	s	CAPACITOR ELECT 10MF/16V(BP)
C228	1-115-154-11	s	CAPACITOR ELECT 10MF/16V(BP)
C300	1-162-923-11	s	CAPACITOR,CERAMIC 47PF/50V CH
C301	1-162-919-11	s	CAPACITOR,CERAMIC 22PF/50V CH
C302	1-162-919-11	s	CAPACITOR,CERAMIC 22PF/50V CH
C303	1-115-154-11	s	CAPACITOR ELECT 10MF/16V(BP)
C304	1-115-154-11	s	CAPACITOR ELECT 10MF/16V(BP)
C400	1-137-710-91	s	CAPACITOR,CERAMIC 10MF B(2012)
C401	1-135-823-11	s	CAPACITOR,CHIP FILM 0.0033MF
C402	1-127-978-11	s	CAPACITOR,FILM 0.01MF (2012)
C403	1-135-823-11	s	CAPACITOR,CHIP FILM 0.0033MF
C404	1-127-957-11	s	CAPACITOR,FILM 0.0056MF (2012)
C405	1-162-919-11	s	CAPACITOR,CERAMIC 22PF/50V CH
C406	1-127-953-11	s	CAPACITOR,FILM 0.033MF (3216)
C407	1-115-154-11	s	CAPACITOR ELECT 10MF/16V(BP)
C408	1-115-414-11	s	CAPACITOR,CHIP CERAMIC 820PF
C409	1-109-899-11	s	CAPACITOR,CHIP CERAMIC 330PF
C410	1-115-154-11	s	CAPACITOR ELECT 10MF/16V(BP)
C500	1-127-956-11	s	CAPACITOR,CHIP FILM 0.1MF
C501	1-164-230-11	s	CAPACITOR,CERAMIC 220PF/50V
C502	1-127-692-11	s	CAP, CHIP CERAMIC 10MF B 3216
C503	1-115-416-11	s	CAPACITOR,CERAMIC 1000PF/25V
C504	1-115-416-11	s	CAPACITOR,CERAMIC 1000PF/25V
C505	1-165-811-11	s	CAPACITOR CHIP CERAMIC 22MF B
C506	1-109-900-11	s	CAPACITOR, CHIP CERAMIC 470PF
C507	1-109-899-11	s	CAPACITOR,CHIP CERAMIC 330PF
C600	1-165-176-11	s	CAPACITOR,CERAMIC 47000PF/16V
C601	1-162-968-11	s	CAPACITOR,CERAMIC 4700PF/50V B
C602	1-162-968-11	s	CAPACITOR,CERAMIC 4700PF/50V B
C603	1-165-811-11	s	CAPACITOR CHIP CERAMIC 22MF B
C604	1-109-897-11	s	CAPACITOR,CHIP CERAMIC 0.015MF
C605	1-109-898-11	s	CAPACITOR,CHIP CERAMIC 18000PF
C606	1-162-970-11	s	CAPACITOR CERAMIC 0.01MF/25V B
C607	1-164-227-11	s	CAPACITOR,CERAMIC 0.022MF/25V
C608	1-107-826-11	s	CAPACITOR,CHIP CERAMIC 0.1MF
C700	1-107-826-11	s	CAPACITOR,CHIP CERAMIC 0.1MF
C701	1-107-826-11	s	CAPACITOR,CHIP CERAMIC 0.1MF
C702	1-165-176-11	s	CAPACITOR,CERAMIC 47000PF/16V
C703	1-165-176-11	s	CAPACITOR,CERAMIC 47000PF/16V
C704	1-137-710-91	s	CAPACITOR,CERAMIC 10MF B(2012)
C705	1-137-710-91	s	CAPACITOR,CERAMIC 10MF B(2012)
C706	1-127-573-11	s	CAPACITOR,CERAMIC 1MFB(2012)
C707	1-127-573-11	s	CAPACITOR,CERAMIC 1MFB(2012)
C708	1-164-227-11	s	CAPACITOR,CERAMIC 0.022MF/25V
C709	1-164-227-11	s	CAPACITOR,CERAMIC 0.022MF/25V
C800	1-127-573-11	s	CAPACITOR,CERAMIC 1MFB(2012)
C801	1-127-573-11	s	CAPACITOR,CERAMIC 1MFB(2012)
C804	1-164-315-11	s	CAPACITOR,CERAMIC 470PF/50V CH
C805	1-162-959-11	s	CAPACITOR,CERAMIC 330PF/50V SL
C852	1-126-394-11	s	CAPACITOR,ELECT 10MF/16V(CHIP)
C853	1-126-394-11	s	CAPACITOR,ELECT 10MF/16V(CHIP)

(AE-31H BOARD [SUFFIX 22-])

Ref. No. or Q'ty	Part No.	SP	Description
C855	1-126-394-11	s	CAPACITOR,ELECT 10MF/16V(CHIP)
C856	1-126-394-11	s	CAPACITOR,ELECT 10MF/16V(CHIP)
C860	1-107-826-11	s	CAPACITOR,CHIP CERAMIC 0.1MF
C863	1-162-970-11	s	CAPACITOR CERAMIC 0.01MF/25V B
C864	1-107-826-11	s	CAPACITOR,CHIP CERAMIC 0.1MF
C865	1-107-826-11	s	CAPACITOR,CHIP CERAMIC 0.1MF
C870	1-107-826-11	s	CAPACITOR,CHIP CERAMIC 0.1MF
C871	1-107-826-11	s	CAPACITOR,CHIP CERAMIC 0.1MF
C872	1-107-826-11	s	CAPACITOR,CHIP CERAMIC 0.1MF
C873	1-107-826-11	s	CAPACITOR,CHIP CERAMIC 0.1MF
CN100	1-691-550-11	s	PIN,CONNECTOR (3P)(SMD)(1.5MM)
CN200	1-573-290-21	s	PIN,CONNECTOR (4P)(SMD)(1.5MM)
CN600	1-573-768-21	s	PIN, CONNECTOR(5P)(SMD)(1.5MM)
CN800	1-580-547-11	o	PIN, CONNECTOR (PC BOARD) 36P
D400	8-719-820-41	s	DIODE 1SS302
D500	8-719-157-94	s	DIODE RD3.3SB
D501	8-719-941-23	s	DIODE DA204U
D800	8-719-801-78	s	DIODE 1SS184
D801	8-719-801-78	s	DIODE 1SS184
D802	8-719-801-78	s	DIODE 1SS184
D850	8-719-975-40	s	DIODE RB411D (RECTI)
D851	8-719-975-40	s	DIODE RB411D (RECTI)
E100	1-535-877-22	s	CHIP,CHECKER (TEST POINT)
E500	1-535-877-22	s	CHIP,CHECKER (TEST POINT)
E600	1-535-877-22	s	CHIP,CHECKER (TEST POINT)
IC100	8-759-711-85	s	IC NJM4580E-D
IC102	8-759-711-85	s	IC NJM4580E-D
IC103	8-759-711-85	s	IC NJM4580E-D
IC104	8-759-711-85	s	IC NJM4580E-D
IC105	6-706-481-01	s	IC TC7SET32FU(T5RSOJF)
IC106	6-706-481-01	s	IC TC7SET32FU(T5RSOJF)
IC200	8-759-711-85	s	IC NJM4580E-D
IC201	8-759-711-85	s	IC NJM4580E-D
IC202	8-759-711-85	s	IC NJM4580E-D
IC203	8-759-711-85	s	IC NJM4580E-D
IC300	8-759-711-85	s	IC NJM4580E-D
IC301	8-759-711-85	s	IC NJM4580E-D
IC400	8-759-711-85	s	IC NJM4580E-D
IC401	8-759-711-85	s	IC NJM4580E-D
IC500	8-759-144-72	s	IC UPC358G2-E2
IC600	6-706-481-01	s	IC TC7SET32FU(T5RSOJF)
IC700	8-759-711-85	s	IC NJM4580E-D
IC701	8-759-711-85	s	IC NJM4580E-D
IC702	8-759-711-85	s	IC NJM4580E-D
IC854	8-759-642-22	s	IC UPC29M05T-E2
IC855	8-759-539-89	s	IC LM2990SX-5.0
IC857	6-706-484-01	s	IC TC7SH04FU(T5RSOYJF)
IC858	8-759-478-92	s	IC TC7SET04FU(TE85R)
IC859	6-706-481-01	s	IC TC7SET32FU(T5RSOJF)
IC860	6-706-481-01	s	IC TC7SET32FU(T5RSOJF)
IC861	6-706-481-01	s	IC TC7SET32FU(T5RSOJF)
IC862	6-706-481-01	s	IC TC7SET32FU(T5RSOJF)
IC863	6-706-484-01	s	IC TC7SH04FU(T5RSOYJF)
L500	1-414-400-11	s	INDUCTOR, 22UH
L600	1-414-400-11	s	INDUCTOR, 22UH
L850	1-416-919-11	s	COIL, CHOKE 150UH
L851	1-416-919-11	s	COIL, CHOKE 150UH

(AE-31H BOARD [SUFFIX 22-])

Ref. No. or Q'ty	Part No.	SP	Description
LV400	1-410-853-21	s	COIL, VARIABLE
LV600	1-414-007-11	s	COIL, VARIABLE
PS850	⚠ 1-533-282-21	s	CIRCUIT PROTECTOR 2A (3225)
PS851	⚠ 1-533-282-21	s	CIRCUIT PROTECTOR 2A (3225)
PS852	⚠ 1-533-282-21	s	CIRCUIT PROTECTOR 2A (3225)
Q100	8-729-220-93	s	TRANSISTOR 2SK209-G
Q101	8-729-209-07	s	TRANSISTOR 2SC4213-B
Q102	8-729-209-07	s	TRANSISTOR 2SC4213-B
Q103	8-729-209-07	s	TRANSISTOR 2SC4213-B
Q104	8-729-209-07	s	TRANSISTOR 2SC4213-B
Q105	8-729-220-93	s	TRANSISTOR 2SK209-G
Q200	8-729-209-07	s	TRANSISTOR 2SC4213-B
Q201	8-729-209-07	s	TRANSISTOR 2SC4213-B
Q202	8-729-220-93	s	TRANSISTOR 2SK209-G
Q203	8-729-220-93	s	TRANSISTOR 2SK209-G
Q204	8-729-220-93	s	TRANSISTOR 2SK209-G
Q205	8-729-209-07	s	TRANSISTOR 2SC4213-B
Q206	8-729-209-07	s	TRANSISTOR 2SC4213-B
Q207	8-729-209-07	s	TRANSISTOR 2SC4213-B
Q208	8-729-209-07	s	TRANSISTOR 2SC4213-B
Q400	8-729-209-07	s	TRANSISTOR 2SC4213-B
Q401	8-729-105-37	s	TRANSISTOR 2SC3360
Q402	8-729-105-37	s	TRANSISTOR 2SC3360
Q403	8-729-105-37	s	TRANSISTOR 2SC3360
Q404	8-729-105-37	s	TRANSISTOR 2SC3360
Q405	8-729-209-07	s	TRANSISTOR 2SC4213-B
Q501	8-729-929-08	s	TRANSISTOR DTC123JE
Q502	8-729-140-63	s	TRANSISTOR 2SA1611-M5M6
Q503	8-729-014-93	s	TRANSISTOR 2SB1440S-TX
Q504	8-729-209-07	s	TRANSISTOR 2SC4213-B
Q505	8-729-209-07	s	TRANSISTOR 2SC4213-B
Q506	8-729-140-63	s	TRANSISTOR 2SA1611-M5M6
Q507	8-729-140-63	s	TRANSISTOR 2SA1611-M5M6
Q600	8-729-928-27	s	TRANSISTOR DTA144EE
Q602	8-729-928-81	s	TRANSISTOR DTC144EE
Q603	8-729-043-74	s	TRANSISTOR SI4435DY-T1-REVA
Q605	8-729-141-75	s	TRANSISTOR 2SD596DV345
Q606	8-729-141-75	s	TRANSISTOR 2SD596DV345
Q607	8-729-928-27	s	TRANSISTOR DTA144EE
Q700	8-729-209-07	s	TRANSISTOR 2SC4213-B
Q701	8-729-209-07	s	TRANSISTOR 2SC4213-B
Q800	8-729-928-81	s	TRANSISTOR DTC144EE
Q801	8-729-928-27	s	TRANSISTOR DTA144EE
Q802	8-729-105-08	s	TRANSISTOR 2SA1330-06
Q803	8-729-928-27	s	TRANSISTOR DTA144EE
Q804	8-729-928-27	s	TRANSISTOR DTA144EE
Q805	8-729-928-27	s	TRANSISTOR DTA144EE
Q806	8-729-928-81	s	TRANSISTOR DTC144EE
Q850	8-729-928-81	s	TRANSISTOR DTC144EE
Q851	8-729-928-81	s	TRANSISTOR DTC144EE
R100	1-218-871-11	s	RESISTOR,CHIP 10K 1/10W (1608)
R101	1-218-871-11	s	RESISTOR,CHIP 10K 1/10W (1608)
R102	1-211-991-11	s	RESISTOR,CHIP 82 1/10W (1608)
R103	1-218-871-11	s	RESISTOR,CHIP 10K 1/10W (1608)
R104	1-218-899-11	s	RESISTOR,CHIP 150K 1/10W(1608)
R105	1-216-864-11	s	CONDUCTOR,CHIP (1608)
R106	1-218-851-11	s	RESISTOR,CHIP 1.5K 1/10W(1608)
R107	1-218-907-11	s	RESISTOR,CHIP 330K 1/10W(1608)

(AE-31H BOARD [SUFFIX 22-])

Ref. No. or Q'ty	Part No.	SP	Description
R108	1-216-864-11	s	CONDUCTOR,CHIP (1608)
R109	1-218-855-11	s	RESISTOR,CHIP 2.2K 1/10W(1608)
R110	1-218-869-11	s	RESISTOR,CHIP 8.2K 1/10W(1608)
R111	1-218-863-11	s	RESISTOR,CHIP 4.7K 1/10W(1608)
R112	1-218-863-11	s	RESISTOR,CHIP 4.7K 1/10W(1608)
R113	1-218-863-11	s	RESISTOR,CHIP 4.7K 1/10W(1608)
R114	1-218-871-11	s	RESISTOR,CHIP 10K 1/10W (1608)
R115	1-218-863-11	s	RESISTOR,CHIP 4.7K 1/10W(1608)
R116	1-218-871-11	s	RESISTOR,CHIP 10K 1/10W (1608)
R117	1-218-855-11	s	RESISTOR,CHIP 2.2K 1/10W(1608)
R118	1-218-869-11	s	RESISTOR,CHIP 8.2K 1/10W(1608)
R119	1-218-887-11	s	RESISTOR,CHIP 47K 1/10W (1608)
R120	1-218-871-11	s	RESISTOR,CHIP 10K 1/10W (1608)
R121	1-218-895-11	s	RESISTOR,CHIP 100K 1/10W(1608)
R122	1-218-907-11	s	RESISTOR,CHIP 330K 1/10W(1608)
R123	1-218-881-11	s	RESISTOR,CHIP 27K 1/10W(1608)
R124	1-218-887-11	s	RESISTOR,CHIP 47K 1/10W (1608)
R125	1-218-879-11	s	RESISTOR,CHIP 22K 1/10W (1608)
R127	1-218-871-11	s	RESISTOR,CHIP 10K 1/10W (1608)
R128	1-218-855-11	s	RESISTOR,CHIP 2.2K 1/10W(1608)
R129	1-218-879-11	s	RESISTOR,CHIP 22K 1/10W (1608)
R130	1-218-871-11	s	RESISTOR,CHIP 10K 1/10W (1608)
R131	1-218-855-11	s	RESISTOR,CHIP 2.2K 1/10W(1608)
R132	1-218-871-11	s	RESISTOR,CHIP 10K 1/10W (1608)
R133	1-218-871-11	s	RESISTOR,CHIP 10K 1/10W (1608)
R134	1-218-847-11	s	RESISTOR,CHIP 1K 1/10W (1608)
R135	1-218-871-11	s	RESISTOR,CHIP 10K 1/10W (1608)
R136	1-218-879-11	s	RESISTOR,CHIP 22K 1/10W (1608)
R137	1-218-879-11	s	RESISTOR,CHIP 22K 1/10W (1608)
R140	1-218-907-11	s	RESISTOR,CHIP 330K 1/10W(1608)
R141	1-218-847-11	s	RESISTOR,CHIP 1K 1/10W (1608)
R200	1-218-871-11	s	RESISTOR,CHIP 10K 1/10W (1608)
R201	1-211-969-11	s	RESISTOR,CHIP 10 1/10W (1608)
R202	1-218-847-11	s	RESISTOR,CHIP 1K 1/10W (1608)
R203	1-218-871-11	s	RESISTOR,CHIP 10K 1/10W (1608)
R205	1-218-871-11	s	RESISTOR,CHIP 10K 1/10W (1608)
R210	1-218-871-11	s	RESISTOR,CHIP 10K 1/10W (1608)
R212	1-211-991-11	s	RESISTOR,CHIP 82 1/10W (1608)
R215	1-218-871-11	s	RESISTOR,CHIP 10K 1/10W (1608)
R216	1-218-899-11	s	RESISTOR,CHIP 150K 1/10W(1608)
R218	1-216-864-11	s	CONDUCTOR,CHIP (1608)
R220	1-218-851-11	s	RESISTOR,CHIP 1.5K 1/10W(1608)
R221	1-216-864-11	s	CONDUCTOR,CHIP (1608)
R222	1-218-907-11	s	RESISTOR,CHIP 330K 1/10W(1608)
R223	1-218-907-11	s	RESISTOR,CHIP 330K 1/10W(1608)
R224	1-218-907-11	s	RESISTOR,CHIP 330K 1/10W(1608)
R225	1-218-855-11	s	RESISTOR,CHIP 2.2K 1/10W(1608)
R226	1-218-869-11	s	RESISTOR,CHIP 8.2K 1/10W(1608)
R227	1-218-863-11	s	RESISTOR,CHIP 4.7K 1/10W(1608)
R228	1-218-863-11	s	RESISTOR,CHIP 4.7K 1/10W(1608)
R229	1-218-863-11	s	RESISTOR,CHIP 4.7K 1/10W(1608)
R230	1-218-871-11	s	RESISTOR,CHIP 10K 1/10W (1608)
R231	1-218-863-11	s	RESISTOR,CHIP 4.7K 1/10W(1608)
R232	1-218-871-11	s	RESISTOR,CHIP 10K 1/10W (1608)
R233	1-218-855-11	s	RESISTOR,CHIP 2.2K 1/10W(1608)
R234	1-218-869-11	s	RESISTOR,CHIP 8.2K 1/10W(1608)
R235	1-218-887-11	s	RESISTOR,CHIP 47K 1/10W (1608)
R236	1-218-871-11	s	RESISTOR,CHIP 10K 1/10W (1608)
R237	1-218-899-11	s	RESISTOR,CHIP 150K 1/10W(1608)

(AE-31H BOARD [SUFFIX 22-])

Ref. No. or Q'ty	Part No.	SP	Description
R238	1-218-899-11	s	RESISTOR,CHIP 150K 1/10W(1608)
R239	1-218-895-11	s	RESISTOR,CHIP 100K 1/10W(1608)
R240	1-218-895-11	s	RESISTOR,CHIP 100K 1/10W(1608)
R241	1-218-879-11	s	RESISTOR,CHIP 22K 1/10W (1608)
R242	1-218-871-11	s	RESISTOR,CHIP 10K 1/10W (1608)
R243	1-218-871-11	s	RESISTOR,CHIP 10K 1/10W (1608)
R244	1-218-871-11	s	RESISTOR,CHIP 10K 1/10W (1608)
R245	1-218-879-11	s	RESISTOR,CHIP 22K 1/10W (1608)
R246	1-218-871-11	s	RESISTOR,CHIP 10K 1/10W (1608)
R247	1-218-871-11	s	RESISTOR,CHIP 10K 1/10W (1608)
R248	1-218-871-11	s	RESISTOR,CHIP 10K 1/10W (1608)
R249	1-218-847-11	s	RESISTOR,CHIP 1K 1/10W (1608)
R250	1-218-871-11	s	RESISTOR,CHIP 10K 1/10W (1608)
R251	1-218-879-11	s	RESISTOR,CHIP 22K 1/10W (1608)
R252	1-218-879-11	s	RESISTOR,CHIP 22K 1/10W (1608)
R300	1-218-855-11	s	RESISTOR,CHIP 2.2K 1/10W(1608)
R301	1-218-869-11	s	RESISTOR,CHIP 8.2K 1/10W(1608)
R302	1-218-871-11	s	RESISTOR,CHIP 10K 1/10W (1608)
R303	1-218-847-11	s	RESISTOR,CHIP 1K 1/10W (1608)
R304	1-218-871-11	s	RESISTOR,CHIP 10K 1/10W (1608)
R305	1-218-879-11	s	RESISTOR,CHIP 22K 1/10W (1608)
R306	1-218-879-11	s	RESISTOR,CHIP 22K 1/10W (1608)
R309	1-218-847-11	s	RESISTOR,CHIP 1K 1/10W (1608)
R400	1-218-871-11	s	RESISTOR,CHIP 10K 1/10W (1608)
R401	1-218-871-11	s	RESISTOR,CHIP 10K 1/10W (1608)
R402	1-218-863-11	s	RESISTOR,CHIP 4.7K 1/10W(1608)
R403	1-218-863-11	s	RESISTOR,CHIP 4.7K 1/10W(1608)
R404	1-218-871-11	s	RESISTOR,CHIP 10K 1/10W (1608)
R405	1-218-871-11	s	RESISTOR,CHIP 10K 1/10W (1608)
R406	1-218-839-11	s	RESISTOR,CHIP 470 1/10W (1608)
R407	1-218-871-11	s	RESISTOR,CHIP 10K 1/10W (1608)
R408	1-218-865-11	s	RESISTOR,CHIP 5.6K 1/10W(1608)
R409	1-218-893-11	s	RESISTOR,CHIP 82K 1/10W(1608)
R410	1-218-859-11	s	RESISTOR,CHIP 3.3K 1/10W(1608)
R411	1-218-835-11	s	RESISTOR,CHIP 330 1/10W (1608)
R412	1-218-895-11	s	RESISTOR,CHIP 100K 1/10W(1608)
R413	1-218-845-11	s	RESISTOR,CHIP 820 1/10W (1608)
R414	1-218-845-11	s	RESISTOR,CHIP 820 1/10W (1608)
R415	1-218-895-11	s	RESISTOR,CHIP 100K 1/10W(1608)
R416	1-218-863-11	s	RESISTOR,CHIP 4.7K 1/10W(1608)
R417	1-218-845-11	s	RESISTOR,CHIP 820 1/10W (1608)
R418	1-218-845-11	s	RESISTOR,CHIP 820 1/10W (1608)
R420	1-218-871-11	s	RESISTOR,CHIP 10K 1/10W (1608)
R421	1-218-871-11	s	RESISTOR,CHIP 10K 1/10W (1608)
R500	1-218-861-11	s	RESISTOR,CHIP 3.9K 1/10W(1608)
R501	1-218-863-11	s	RESISTOR,CHIP 4.7K 1/10W(1608)
R502	1-218-871-11	s	RESISTOR,CHIP 10K 1/10W (1608)
R503	1-218-879-11	s	RESISTOR,CHIP 22K 1/10W (1608)
R504	1-218-847-11	s	RESISTOR,CHIP 1K 1/10W (1608)
R505	1-218-879-11	s	RESISTOR,CHIP 22K 1/10W (1608)
R506	1-218-847-11	s	RESISTOR,CHIP 1K 1/10W (1608)
R507	1-218-871-11	s	RESISTOR,CHIP 10K 1/10W (1608)
R508	1-218-871-11	s	RESISTOR,CHIP 10K 1/10W (1608)
R509	1-218-887-11	s	RESISTOR,CHIP 47K 1/10W (1608)
R510	1-218-887-11	s	RESISTOR,CHIP 47K 1/10W (1608)
R511	1-216-789-11	s	RESISTOR,CHIP 2.2 1/16W(1608)
R512	1-216-789-11	s	RESISTOR,CHIP 2.2 1/16W(1608)
R513	1-218-887-11	s	RESISTOR,CHIP 47K 1/10W (1608)
R514	1-218-863-11	s	RESISTOR,CHIP 4.7K 1/10W(1608)

(AE-31H BOARD [SUFFIX 22-])

Ref. No. or Q'ty	Part No.	SP	Description
R515	1-218-863-11	s	RESISTOR,CHIP 4.7K 1/10W(1608)
R601	1-218-891-11	s	RESISTOR,CHIP 68K 1/10W (1608)
R602	1-218-885-11	s	RESISTOR,CHIP 39K 1/10W (1608)
R604	1-218-879-11	s	RESISTOR,CHIP 22K 1/10W (1608)
R605	1-218-879-11	s	RESISTOR,CHIP 22K 1/10W (1608)
R606	1-216-789-11	s	RESISTOR,CHIP 2.2 1/16W(1608)
R607	1-216-789-11	s	RESISTOR,CHIP 2.2 1/16W(1608)
R608	1-218-236-91	s	RESISTOR,CHIP 1 1/4W
R609	1-218-887-11	s	RESISTOR,CHIP 47K 1/10W (1608)
R610	1-218-887-11	s	RESISTOR,CHIP 47K 1/10W (1608)
R700	1-218-871-11	s	RESISTOR,CHIP 10K 1/10W (1608)
R701	1-218-871-11	s	RESISTOR,CHIP 10K 1/10W (1608)
R702	1-218-863-11	s	RESISTOR,CHIP 4.7K 1/10W(1608)
R703	1-218-863-11	s	RESISTOR,CHIP 4.7K 1/10W(1608)
R704	1-218-907-11	s	RESISTOR,CHIP 330K 1/10W(1608)
R705	1-218-907-11	s	RESISTOR,CHIP 330K 1/10W(1608)
R706	1-211-969-11	s	RESISTOR,CHIP 10 1/10W (1608)
R707	1-211-969-11	s	RESISTOR,CHIP 10 1/10W (1608)
R708	1-218-887-11	s	RESISTOR,CHIP 47K 1/10W (1608)
R709	1-218-887-11	s	RESISTOR,CHIP 47K 1/10W (1608)
R710	1-218-863-11	s	RESISTOR,CHIP 4.7K 1/10W(1608)
R711	1-218-863-11	s	RESISTOR,CHIP 4.7K 1/10W(1608)
R712	1-218-871-11	s	RESISTOR,CHIP 10K 1/10W (1608)
R713	1-218-871-11	s	RESISTOR,CHIP 10K 1/10W (1608)
R714	1-218-907-11	s	RESISTOR,CHIP 330K 1/10W(1608)
R715	1-218-907-11	s	RESISTOR,CHIP 330K 1/10W(1608)
R716	1-218-871-11	s	RESISTOR,CHIP 10K 1/10W (1608)
R717	1-218-871-11	s	RESISTOR,CHIP 10K 1/10W (1608)
R800	1-218-895-11	s	RESISTOR,CHIP 100K 1/10W(1608)
R801	1-218-887-11	s	RESISTOR,CHIP 47K 1/10W (1608)
R803	1-218-879-11	s	RESISTOR,CHIP 22K 1/10W (1608)
R804	1-218-887-11	s	RESISTOR,CHIP 47K 1/10W (1608)
R805	1-218-887-11	s	RESISTOR,CHIP 47K 1/10W (1608)
R806	1-218-887-11	s	RESISTOR,CHIP 47K 1/10W (1608)
R808	1-216-864-11	s	CONDUCTOR,CHIP (1608)
R853	1-218-887-11	s	RESISTOR,CHIP 47K 1/10W (1608)
R857	1-218-863-11	s	RESISTOR,CHIP 4.7K 1/10W(1608)
R858	1-218-863-11	s	RESISTOR,CHIP 4.7K 1/10W(1608)
R859	1-218-887-11	s	RESISTOR,CHIP 47K 1/10W (1608)
R861	1-216-864-11	s	CONDUCTOR,CHIP (1608)
RV100	1-225-796-11	s	RESISTOR,ADJ.CERMET 100K
RV101	1-225-791-21	s	RES, ADJ,CERMET 5K
RV102	1-225-789-21	s	RES, ADJ,CERMET 2K
RV103	1-225-793-11	s	RES, ADJ,CERMET 20K
RV200	1-225-796-11	s	RESISTOR,ADJ.CERMET 100K
RV201	1-225-791-21	s	RES, ADJ,CERMET 5K
RV202	1-225-789-21	s	RES, ADJ,CERMET 2K
RV203	1-225-791-21	s	RES, ADJ,CERMET 5K
RV204	1-225-793-11	s	RES, ADJ,CERMET 20K
RV205	1-225-791-21	s	RES, ADJ,CERMET 5K
RV300	1-225-793-11	s	RES, ADJ,CERMET 20K
RV400	1-225-789-21	s	RES, ADJ,CERMET 2K
RV401	1-225-793-11	s	RES, ADJ,CERMET 20K
RV500	1-225-791-21	s	RES, ADJ,CERMET 5K
RV700	1-225-792-21	s	RES, ADJ,CERMET 10K
RV701	1-225-792-21	s	RES, ADJ,CERMET 10K
RV702	1-225-788-21	s	RES, ADJ,CERMET 1K
RV703	1-225-788-21	s	RES, ADJ,CERMET 1K

(AE-31H BOARD [SUFFIX 22-])

Ref. No. or Q'ty	Part No.	SP	Description
S100	1-692-881-41	s	SWITCH, SLIDE
S200	1-692-881-41	s	SWITCH, SLIDE
T500	1-433-326-11	s	TRANSFORMER,BIAS OSCILLATION
T600	1-424-511-11	s	TRANSFORMER,FE
TP100	1-535-877-22	s	CHIP,CHECKER (TEST POINT)
TP200	1-535-877-22	s	CHIP,CHECKER (TEST POINT)
TP201	1-535-877-22	s	CHIP,CHECKER (TEST POINT)
TP202	1-535-877-22	s	CHIP,CHECKER (TEST POINT)
TP300	1-535-877-22	s	CHIP,CHECKER (TEST POINT)
TP400	1-535-877-22	s	CHIP,CHECKER (TEST POINT)
TP401	1-535-877-22	s	CHIP,CHECKER (TEST POINT)
TP500	1-535-877-22	s	CHIP,CHECKER (TEST POINT)
TP601	1-535-877-22	s	CHIP,CHECKER (TEST POINT)

APR-52 BOARD for RECORDER

[Lot No. 261 -] HDW-2000, M2000/P
[Lot No. 4C2 -] HDW-D2000
[Lot No. 462 -] HDW-S2000/P
[Lot No. 434 -] DVW-2000/P, M2000/P
[Lot No. 261 -] MSW-2000, M2000/P, A2000/P
[Lot No. 495 -] MSW-M2000E/P

*1: [Lot No. 261 -] [Board No. suffix 14 -]
*2: [Lot No. 421 -] [Board No. suffix 16 -]

Ref. No. or Q'ty	Part No.	SP	Description
1pc	A-8324-858-C	s	MOUNTED CIRCUIT BOARD, APR-52
6pcs	7-682-902-11	s	SCREW +PWH 2.6X5
1pc	3-179-084-11	s	LEVER(R),PRINTED C.BOARD
1pc	3-179-085-11	s	LEVER(L),PRINTED C.BOARD
C100	1-128-936-21	s	CAPACITOR,ELECT (NONPOLAR)22MF
C101	1-128-936-21	s	CAPACITOR,ELECT (NONPOLAR)22MF
C102	1-162-927-11	s	CAPACITOR,CERAMIC 100PF/50V CH
C103	1-162-927-11	s	CAPACITOR,CERAMIC 100PF/50V CH
C104	*2 1-127-692-11	s	CAP, CHIP CERAMIC 10MF B 3216
	*1 1-104-851-11	s	CAPACITOR,TANTALUM 10MF/10V
C105	1-107-826-11	s	CAPACITOR,CHIP CERAMIC 0.1MF
C106	1-162-927-11	s	CAPACITOR,CERAMIC 100PF/50V CH
C107	1-162-927-11	s	CAPACITOR,CERAMIC 100PF/50V CH
C108	1-115-154-11	s	CAPACITOR ELECT 10MF/16V(BP)
C109	1-162-927-11	s	CAPACITOR,CERAMIC 100PF/50V CH
C110	1-115-152-11	s	CAPACITOR,ELECT 22MF/6.3V(BP)
C111	1-107-826-11	s	CAPACITOR,CHIP CERAMIC 0.1MF
C112	1-126-399-11	s	CAPACITOR ELECT 10MF/35V(CHIP)
C113	1-126-399-11	s	CAPACITOR ELECT 10MF/35V(CHIP)
C114	1-107-826-11	s	CAPACITOR,CHIP CERAMIC 0.1MF
C115	1-162-919-11	s	CAPACITOR,CERAMIC 22PF/50V CH
C116	1-115-155-11	s	CAPACITOR,ELECT 22MF/16V(BP)
C117	*2 1-127-715-11	s	CAPACITOR,CERAMIC 0.22MF B1608
	*1 1-107-826-11	s	CAPACITOR,CHIP CERAMIC 0.1MF
C118	1-127-948-11	s	CAPACITOR,FILM 0.0047MF (2012)
C119	1-127-760-11	s	CAPACITOR,CERAMIC 4.7MF/6.3V
C120	1-163-275-11	s	CAPACITOR CERAMIC 1000PF/50V
C121	1-164-690-11	s	CAPACITOR ,CERAMIC 2200PF CH
C122	1-162-927-11	s	CAPACITOR,CERAMIC 100PF/50V CH
C123	1-126-390-11	s	CAPACITOR ELECT 22MF/6.3V(105)
C124	1-126-390-11	s	CAPACITOR ELECT 22MF/6.3V(105)
C125	1-126-390-11	s	CAPACITOR ELECT 22MF/6.3V(105)
C126	1-164-690-11	s	CAPACITOR ,CERAMIC 2200PF CH
C127	1-164-690-11	s	CAPACITOR ,CERAMIC 2200PF CH
C128	1-107-826-11	s	CAPACITOR,CHIP CERAMIC 0.1MF
C129	1-107-826-11	s	CAPACITOR,CHIP CERAMIC 0.1MF
C130	*2 1-127-692-11	s	CAP, CHIP CERAMIC 10MF B 3216
	*1 1-104-851-11	s	CAPACITOR,TANTALUM 10MF/10V
C131	1-107-826-11	s	CAPACITOR,CHIP CERAMIC 0.1MF
C132	1-107-826-11	s	CAPACITOR,CHIP CERAMIC 0.1MF
C133	*2 1-127-692-11	s	CAP, CHIP CERAMIC 10MF B 3216
	*1 1-104-851-11	s	CAPACITOR,TANTALUM 10MF/10V
C134	1-107-826-11	s	CAPACITOR,CHIP CERAMIC 0.1MF
C135	1-107-826-11	s	CAPACITOR,CHIP CERAMIC 0.1MF
C136	*2 1-127-692-11	s	CAP, CHIP CERAMIC 10MF B 3216
	*1 1-104-851-11	s	CAPACITOR,TANTALUM 10MF/10V
C137	*2 1-127-692-11	s	CAP, CHIP CERAMIC 10MF B 3216
	*1 1-104-851-11	s	CAPACITOR,TANTALUM 10MF/10V
C138	1-107-826-11	s	CAPACITOR,CHIP CERAMIC 0.1MF
C139	1-107-826-11	s	CAPACITOR,CHIP CERAMIC 0.1MF
C140	1-107-826-11	s	CAPACITOR,CHIP CERAMIC 0.1MF
C141	1-107-826-11	s	CAPACITOR,CHIP CERAMIC 0.1MF
C142	1-107-826-11	s	CAPACITOR,CHIP CERAMIC 0.1MF

(APR-52 BOARD for RECORDER)

Ref. No. or Q'ty	Part No.	SP	Description
C143	1-107-826-11	s	CAPACITOR,CHIP CERAMIC 0.1MF
C144	1-107-826-11	s	CAPACITOR,CHIP CERAMIC 0.1MF
C145	1-126-390-11	s	CAPACITOR ELECT 22MF/6.3V(105)
C146	1-126-390-11	s	CAPACITOR ELECT 22MF/6.3V(105)
C148	1-115-459-11	s	CAPACITOR,ELECT 47MF/6.3V(BP)
C149	1-115-459-11	s	CAPACITOR,ELECT 47MF/6.3V(BP)
C152	1-107-826-11	s	CAPACITOR,CHIP CERAMIC 0.1MF
C200	1-128-936-21	s	CAPACITOR,ELECT (NONPOLAR)22MF
C201	1-128-936-21	s	CAPACITOR,ELECT (NONPOLAR)22MF
C202	1-162-927-11	s	CAPACITOR,CERAMIC 100PF/50V CH
C203	1-162-927-11	s	CAPACITOR,CERAMIC 100PF/50V CH
C204 *2	1-127-692-11	s	CAP, CHIP CERAMIC 10MF B 3216
*1	1-104-851-11	s	CAPACITOR,TANTALUM 10MF/10V
C205	1-107-826-11	s	CAPACITOR,CHIP CERAMIC 0.1MF
C206	1-162-927-11	s	CAPACITOR,CERAMIC 100PF/50V CH
C207	1-162-927-11	s	CAPACITOR,CERAMIC 100PF/50V CH
C208	1-115-154-11	s	CAPACITOR ELECT 10MF/16V(BP)
C209	1-162-927-11	s	CAPACITOR,CERAMIC 100PF/50V CH
C210	1-115-152-11	s	CAPACITOR,ELECT 22MF/6.3V(BP)
C211	1-107-826-11	s	CAPACITOR,CHIP CERAMIC 0.1MF
C212	1-126-399-11	s	CAPACITOR ELECT 10MF/35V(CHIP)
C213	1-126-399-11	s	CAPACITOR ELECT 10MF/35V(CHIP)
C214	1-107-826-11	s	CAPACITOR,CHIP CERAMIC 0.1MF
C215	1-162-919-11	s	CAPACITOR,CERAMIC 22PF/50V CH
C216	1-115-155-11	s	CAPACITOR,ELECT 22MF/16V(BP)
C217 *2	1-127-715-11	s	CAPACITOR,CERAMIC 0.22MF B1608
*1	1-107-826-11	s	CAPACITOR,CHIP CERAMIC 0.1MF
C218	1-127-948-11	s	CAPACITOR,FILM 0.0047MF (2012)
C219	1-127-760-11	s	CAPACITOR,CERAMIC 4.7MF/6.3V
C220	1-163-275-11	s	CAPACITOR CERAMIC 1000PF/50V
C221	1-164-690-11	s	CAPACITOR ,CERAMIC 2200PF CH
C222	1-162-927-11	s	CAPACITOR,CERAMIC 100PF/50V CH
C223	1-126-390-11	s	CAPACITOR ELECT 22MF/6.3V(105)
C224	1-126-390-11	s	CAPACITOR ELECT 22MF/6.3V(105)
C225	1-126-390-11	s	CAPACITOR ELECT 22MF/6.3V(105)
C238	1-107-826-11	s	CAPACITOR,CHIP CERAMIC 0.1MF
C239	1-107-826-11	s	CAPACITOR,CHIP CERAMIC 0.1MF
C240	1-107-826-11	s	CAPACITOR,CHIP CERAMIC 0.1MF
C241	1-107-826-11	s	CAPACITOR,CHIP CERAMIC 0.1MF
C242	1-107-826-11	s	CAPACITOR,CHIP CERAMIC 0.1MF
C243	1-107-826-11	s	CAPACITOR,CHIP CERAMIC 0.1MF
C244	1-107-826-11	s	CAPACITOR,CHIP CERAMIC 0.1MF
C248	1-115-459-11	s	CAPACITOR,ELECT 47MF/6.3V(BP)
C249	1-115-459-11	s	CAPACITOR,ELECT 47MF/6.3V(BP)
C250	1-162-919-11	s	CAPACITOR,CERAMIC 22PF/50V CH
C251	1-162-919-11	s	CAPACITOR,CERAMIC 22PF/50V CH
C252	1-107-826-11	s	CAPACITOR,CHIP CERAMIC 0.1MF
C300	1-128-936-21	s	CAPACITOR,ELECT (NONPOLAR)22MF
C301	1-128-936-21	s	CAPACITOR,ELECT (NONPOLAR)22MF
C302	1-162-927-11	s	CAPACITOR,CERAMIC 100PF/50V CH
C303	1-162-927-11	s	CAPACITOR,CERAMIC 100PF/50V CH
C304 *2	1-127-692-11	s	CAP, CHIP CERAMIC 10MF B 3216
*1	1-104-851-11	s	CAPACITOR,TANTALUM 10MF/10V
C305	1-107-826-11	s	CAPACITOR,CHIP CERAMIC 0.1MF
C306	1-162-927-11	s	CAPACITOR,CERAMIC 100PF/50V CH
C307	1-162-927-11	s	CAPACITOR,CERAMIC 100PF/50V CH
C308	1-115-154-11	s	CAPACITOR ELECT 10MF/16V(BP)
C309	1-162-927-11	s	CAPACITOR,CERAMIC 100PF/50V CH
C310	1-115-152-11	s	CAPACITOR,ELECT 22MF/6.3V(BP)

(APR-52 BOARD for RECORDER)

Ref. No. or Q'ty	Part No.	SP	Description
C311	1-107-826-11	s	CAPACITOR,CHIP CERAMIC 0.1MF
C312	1-126-399-11	s	CAPACITOR ELECT 10MF/35V(CHIP)
C313	1-126-399-11	s	CAPACITOR ELECT 10MF/35V(CHIP)
C314	1-107-826-11	s	CAPACITOR,CHIP CERAMIC 0.1MF
C315	1-162-919-11	s	CAPACITOR,CERAMIC 22PF/50V CH
C316	1-115-155-11	s	CAPACITOR,ELECT 22MF/16V(BP)
C317 *2	1-127-715-11	s	CAPACITOR,CERAMIC 0.22MF B1608
*1	1-107-826-11	s	CAPACITOR,CHIP CERAMIC 0.1MF
C318	1-127-948-11	s	CAPACITOR,FILM 0.0047MF (2012)
C319	1-127-760-11	s	CAPACITOR,CERAMIC 4.7MF/6.3V
C320	1-163-275-11	s	CAPACITOR CERAMIC 1000PF/50V
C321	1-164-690-11	s	CAPACITOR ,CERAMIC 2200PF CH
C322	1-162-927-11	s	CAPACITOR,CERAMIC 100PF/50V CH
C323	1-126-390-11	s	CAPACITOR ELECT 22MF/6.3V(105)
C324	1-126-390-11	s	CAPACITOR ELECT 22MF/6.3V(105)
C325	1-126-390-11	s	CAPACITOR ELECT 22MF/6.3V(105)
C326	1-164-690-11	s	CAPACITOR ,CERAMIC 2200PF CH
C327	1-164-690-11	s	CAPACITOR ,CERAMIC 2200PF CH
C328	1-107-826-11	s	CAPACITOR,CHIP CERAMIC 0.1MF
C329	1-107-826-11	s	CAPACITOR,CHIP CERAMIC 0.1MF
C330 *2	1-127-692-11	s	CAP, CHIP CERAMIC 10MF B 3216
*1	1-104-851-11	s	CAPACITOR,TANTALUM 10MF/10V
C331	1-107-826-11	s	CAPACITOR,CHIP CERAMIC 0.1MF
C332	1-107-826-11	s	CAPACITOR,CHIP CERAMIC 0.1MF
C333 *2	1-127-692-11	s	CAP, CHIP CERAMIC 10MF B 3216
*1	1-104-851-11	s	CAPACITOR,TANTALUM 10MF/10V
C334	1-107-826-11	s	CAPACITOR,CHIP CERAMIC 0.1MF
C335	1-107-826-11	s	CAPACITOR,CHIP CERAMIC 0.1MF
C336 *2	1-127-692-11	s	CAP, CHIP CERAMIC 10MF B 3216
*1	1-104-851-11	s	CAPACITOR,TANTALUM 10MF/10V
C337 *2	1-127-692-11	s	CAP, CHIP CERAMIC 10MF B 3216
*1	1-104-851-11	s	CAPACITOR,TANTALUM 10MF/10V
C338	1-107-826-11	s	CAPACITOR,CHIP CERAMIC 0.1MF
C339	1-107-826-11	s	CAPACITOR,CHIP CERAMIC 0.1MF
C340	1-107-826-11	s	CAPACITOR,CHIP CERAMIC 0.1MF
C341	1-107-826-11	s	CAPACITOR,CHIP CERAMIC 0.1MF
C342	1-107-826-11	s	CAPACITOR,CHIP CERAMIC 0.1MF
C343	1-107-826-11	s	CAPACITOR,CHIP CERAMIC 0.1MF
C344	1-107-826-11	s	CAPACITOR,CHIP CERAMIC 0.1MF
C345	1-126-390-11	s	CAPACITOR ELECT 22MF/6.3V(105)
C346	1-126-390-11	s	CAPACITOR ELECT 22MF/6.3V(105)
C348	1-115-459-11	s	CAPACITOR,ELECT 47MF/6.3V(BP)
C349	1-115-459-11	s	CAPACITOR,ELECT 47MF/6.3V(BP)
C352	1-107-826-11	s	CAPACITOR,CHIP CERAMIC 0.1MF
C400	1-128-936-21	s	CAPACITOR,ELECT (NONPOLAR)22MF
C401	1-128-936-21	s	CAPACITOR,ELECT (NONPOLAR)22MF
C402	1-162-927-11	s	CAPACITOR,CERAMIC 100PF/50V CH
C403	1-162-927-11	s	CAPACITOR,CERAMIC 100PF/50V CH
C404 *2	1-127-692-11	s	CAP, CHIP CERAMIC 10MF B 3216
*1	1-104-851-11	s	CAPACITOR,TANTALUM 10MF/10V
C405	1-107-826-11	s	CAPACITOR,CHIP CERAMIC 0.1MF
C406	1-162-927-11	s	CAPACITOR,CERAMIC 100PF/50V CH
C407	1-162-927-11	s	CAPACITOR,CERAMIC 100PF/50V CH
C408	1-115-154-11	s	CAPACITOR ELECT 10MF/16V(BP)
C409	1-162-927-11	s	CAPACITOR,CERAMIC 100PF/50V CH
C410	1-115-152-11	s	CAPACITOR,ELECT 22MF/6.3V(BP)
C411	1-107-826-11	s	CAPACITOR,CHIP CERAMIC 0.1MF
C412	1-126-399-11	s	CAPACITOR ELECT 10MF/35V(CHIP)
C413	1-126-399-11	s	CAPACITOR ELECT 10MF/35V(CHIP)
C414	1-107-826-11	s	CAPACITOR,CHIP CERAMIC 0.1MF

(APR-52 BOARD for RECORDER)

Ref. No. or Q'ty	Part No.	SP	Description
C415	1-162-919-11	s	CAPACITOR,CERAMIC 22PF/50V CH
C416	1-115-155-11	s	CAPACITOR,ELECT 22MF/16V(BP)
C417 *2	1-127-715-11	s	CAPACITOR,CERAMIC 0.22MF B1608
*1	1-107-826-11	s	CAPACITOR,CHIP CERAMIC 0.1MF
C418	1-127-948-11	s	CAPACITOR,FILM 0.0047MF (2012)
C419	1-127-760-11	s	CAPACITOR,CERAMIC 4.7MF/6.3V
C420	1-163-275-11	s	CAPACITOR CERAMIC 1000PF/50V
C421	1-164-690-11	s	CAPACITOR ,CERAMIC 2200PF CH
C422	1-162-927-11	s	CAPACITOR,CERAMIC 100PF/50V CH
C423	1-126-390-11	s	CAPACITOR ELECT 22MF/6.3V(105)
C424	1-126-390-11	s	CAPACITOR ELECT 22MF/6.3V(105)
C425	1-126-390-11	s	CAPACITOR ELECT 22MF/6.3V(105)
C438	1-107-826-11	s	CAPACITOR,CHIP CERAMIC 0.1MF
C439	1-107-826-11	s	CAPACITOR,CHIP CERAMIC 0.1MF
C440	1-107-826-11	s	CAPACITOR,CHIP CERAMIC 0.1MF
C441	1-107-826-11	s	CAPACITOR,CHIP CERAMIC 0.1MF
C442	1-107-826-11	s	CAPACITOR,CHIP CERAMIC 0.1MF
C443	1-107-826-11	s	CAPACITOR,CHIP CERAMIC 0.1MF
C444	1-107-826-11	s	CAPACITOR,CHIP CERAMIC 0.1MF
C448	1-115-459-11	s	CAPACITOR,ELECT 47MF/6.3V(BP)
C449	1-115-459-11	s	CAPACITOR,ELECT 47MF/6.3V(BP)
C450	1-162-919-11	s	CAPACITOR,CERAMIC 22PF/50V CH
C451	1-162-919-11	s	CAPACITOR,CERAMIC 22PF/50V CH
C452	1-107-826-11	s	CAPACITOR,CHIP CERAMIC 0.1MF
C500	1-107-826-11	s	CAPACITOR,CHIP CERAMIC 0.1MF
C501	1-107-826-11	s	CAPACITOR,CHIP CERAMIC 0.1MF
C504	1-107-826-11	s	CAPACITOR,CHIP CERAMIC 0.1MF
C505 *2	1-127-692-11	s	CAP, CHIP CERAMIC 10MF B 3216
*1	1-104-851-11	s	CAPACITOR,TANTALUM 10MF/10V
C506	1-164-690-11	s	CAPACITOR ,CERAMIC 2200PF CH
C507 *2	1-127-692-11	s	CAP, CHIP CERAMIC 10MF B 3216
*1	1-104-851-11	s	CAPACITOR,TANTALUM 10MF/10V
C508	1-164-217-11	s	CAPACITOR,CERAMIC 150PF/50V CH
C509	1-164-217-11	s	CAPACITOR,CERAMIC 150PF/50V CH
C510	1-164-217-11	s	CAPACITOR,CERAMIC 150PF/50V CH
C511	1-164-217-11	s	CAPACITOR,CERAMIC 150PF/50V CH
C512	1-164-217-11	s	CAPACITOR,CERAMIC 150PF/50V CH
C513	1-164-217-11	s	CAPACITOR,CERAMIC 150PF/50V CH
C514	1-164-230-11	s	CAPACITOR,CERAMIC 220PF/50V
C515	1-127-948-11	s	CAPACITOR,FILM 0.0047MF (2012)
C516 *2	1-127-715-11	s	CAPACITOR,CERAMIC 0.22MF B1608
*1	1-107-826-11	s	CAPACITOR,CHIP CERAMIC 0.1MF
C517	1-127-948-11	s	CAPACITOR,FILM 0.0047MF (2012)
C518	1-164-690-11	s	CAPACITOR ,CERAMIC 2200PF CH
C519	1-162-915-11	s	CAPACITOR,CERAMIC 10PF/50V CH
C520	1-162-919-11	s	CAPACITOR,CERAMIC 22PF/50V CH
C521	1-162-927-11	s	CAPACITOR,CERAMIC 100PF/50V CH
C522	1-115-153-11	s	CAPACITOR,ELECT 4.7MF/16V(BP)
C523	1-115-153-11	s	CAPACITOR,ELECT 4.7MF/16V(BP)
C524	1-162-919-11	s	CAPACITOR,CERAMIC 22PF/50V CH
C525	1-162-927-11	s	CAPACITOR,CERAMIC 100PF/50V CH
C526	1-115-153-11	s	CAPACITOR,ELECT 4.7MF/16V(BP)
C527	1-115-153-11	s	CAPACITOR,ELECT 4.7MF/16V(BP)
C528	1-126-399-11	s	CAPACITOR ELECT 10MF/35V(CHIP)
C529	1-126-399-11	s	CAPACITOR ELECT 10MF/35V(CHIP)
C530	1-107-826-11	s	CAPACITOR,CHIP CERAMIC 0.1MF
C531	1-107-826-11	s	CAPACITOR,CHIP CERAMIC 0.1MF
C532	1-163-275-11	s	CAPACITOR CERAMIC 1000PF/50V
C533	1-126-391-11	s	CAPACITOR ELECT 47MF/6.3V(105)

(APR-52 BOARD for RECORDER)

Ref. No. or Q'ty	Part No.	SP	Description
C534	1-127-948-11	s	CAPACITOR,FILM 0.0047MF (2012)
C535	1-164-230-11	s	CAPACITOR,CERAMIC 220PF/50V
C540	1-107-826-11	s	CAPACITOR,CHIP CERAMIC 0.1MF
C541	1-107-826-11	s	CAPACITOR,CHIP CERAMIC 0.1MF
C542	1-107-826-11	s	CAPACITOR,CHIP CERAMIC 0.1MF
C543	1-107-826-11	s	CAPACITOR,CHIP CERAMIC 0.1MF
C544	1-162-919-11	s	CAPACITOR,CERAMIC 22PF/50V CH
C546	1-162-919-11	s	CAPACITOR,CERAMIC 22PF/50V CH
C556	1-107-826-11	s	CAPACITOR,CHIP CERAMIC 0.1MF
C557	1-162-919-11	s	CAPACITOR,CERAMIC 22PF/50V CH
C558	1-162-919-11	s	CAPACITOR,CERAMIC 22PF/50V CH
C600	1-162-919-11	s	CAPACITOR,CERAMIC 22PF/50V CH
C602	1-162-919-11	s	CAPACITOR,CERAMIC 22PF/50V CH
C604	1-107-826-11	s	CAPACITOR,CHIP CERAMIC 0.1MF
C605 *2	1-127-692-11	s	CAP, CHIP CERAMIC 10MF B 3216
*1	1-104-851-11	s	CAPACITOR,TANTALUM 10MF/10V
C606	1-164-690-11	s	CAPACITOR ,CERAMIC 2200PF CH
C607 *2	1-127-692-11	s	CAP, CHIP CERAMIC 10MF B 3216
*1	1-104-851-11	s	CAPACITOR,TANTALUM 10MF/10V
C608	1-164-217-11	s	CAPACITOR,CERAMIC 150PF/50V CH
C609	1-164-217-11	s	CAPACITOR,CERAMIC 150PF/50V CH
C610	1-164-217-11	s	CAPACITOR,CERAMIC 150PF/50V CH
C611	1-164-217-11	s	CAPACITOR,CERAMIC 150PF/50V CH
C612	1-164-217-11	s	CAPACITOR,CERAMIC 150PF/50V CH
C613	1-164-217-11	s	CAPACITOR,CERAMIC 150PF/50V CH
C614	1-164-230-11	s	CAPACITOR,CERAMIC 220PF/50V
C615	1-127-948-11	s	CAPACITOR,FILM 0.0047MF (2012)
C616 *2	1-127-715-11	s	CAPACITOR,CERAMIC 0.22MF B1608
*1	1-107-826-11	s	CAPACITOR,CHIP CERAMIC 0.1MF
C617	1-127-948-11	s	CAPACITOR,FILM 0.0047MF (2012)
C618	1-164-690-11	s	CAPACITOR ,CERAMIC 2200PF CH
C619	1-162-915-11	s	CAPACITOR,CERAMIC 10PF/50V CH
C620	1-162-919-11	s	CAPACITOR,CERAMIC 22PF/50V CH
C621	1-162-927-11	s	CAPACITOR,CERAMIC 100PF/50V CH
C622	1-115-153-11	s	CAPACITOR,ELECT 4.7MF/16V(BP)
C623	1-115-153-11	s	CAPACITOR,ELECT 4.7MF/16V(BP)
C624	1-162-919-11	s	CAPACITOR,CERAMIC 22PF/50V CH
C625	1-162-927-11	s	CAPACITOR,CERAMIC 100PF/50V CH
C626	1-115-153-11	s	CAPACITOR,ELECT 4.7MF/16V(BP)
C627	1-115-153-11	s	CAPACITOR,ELECT 4.7MF/16V(BP)
C628	1-126-399-11	s	CAPACITOR ELECT 10MF/35V(CHIP)
C629	1-126-399-11	s	CAPACITOR ELECT 10MF/35V(CHIP)
C630	1-107-826-11	s	CAPACITOR,CHIP CERAMIC 0.1MF
C631	1-107-826-11	s	CAPACITOR,CHIP CERAMIC 0.1MF
C632	1-163-275-11	s	CAPACITOR CERAMIC 1000PF/50V
C633	1-126-391-11	s	CAPACITOR ELECT 47MF/6.3V(105)
C634	1-127-948-11	s	CAPACITOR,FILM 0.0047MF (2012)
C635	1-164-230-11	s	CAPACITOR,CERAMIC 220PF/50V
C640	1-107-826-11	s	CAPACITOR,CHIP CERAMIC 0.1MF
C641	1-107-826-11	s	CAPACITOR,CHIP CERAMIC 0.1MF
C642	1-107-826-11	s	CAPACITOR,CHIP CERAMIC 0.1MF
C643	1-107-826-11	s	CAPACITOR,CHIP CERAMIC 0.1MF
C656	1-107-826-11	s	CAPACITOR,CHIP CERAMIC 0.1MF
C657	1-162-919-11	s	CAPACITOR,CERAMIC 22PF/50V CH
C658	1-162-919-11	s	CAPACITOR,CERAMIC 22PF/50V CH
C700	1-107-826-11	s	CAPACITOR,CHIP CERAMIC 0.1MF
C701	1-107-826-11	s	CAPACITOR,CHIP CERAMIC 0.1MF
C702	1-127-948-11	s	CAPACITOR,FILM 0.0047MF (2012)
C703	1-164-230-11	s	CAPACITOR,CERAMIC 220PF/50V

(APR-52 BOARD for RECORDER)

Ref. No. or Q'ty	Part No.	SP	Description
C704	1-107-826-11	s	CAPACITOR,CHIP CERAMIC 0.1MF
C705 *2	1-127-692-11	s	CAP, CHIP CERAMIC 10MF B 3216
*1	1-104-851-11	s	CAPACITOR,TANTALUM 10MF/10V
C706	1-164-690-11	s	CAPACITOR ,CERAMIC 2200PF CH
C707 *2	1-127-692-11	s	CAP, CHIP CERAMIC 10MF B 3216
*1	1-104-851-11	s	CAPACITOR,TANTALUM 10MF/10V
C708	1-164-217-11	s	CAPACITOR,CERAMIC 150PF/50V CH
C709	1-164-217-11	s	CAPACITOR,CERAMIC 150PF/50V CH
C710	1-164-217-11	s	CAPACITOR,CERAMIC 150PF/50V CH
C711	1-164-217-11	s	CAPACITOR,CERAMIC 150PF/50V CH
C712	1-164-217-11	s	CAPACITOR,CERAMIC 150PF/50V CH
C713	1-164-217-11	s	CAPACITOR,CERAMIC 150PF/50V CH
C714	1-164-230-11	s	CAPACITOR,CERAMIC 220PF/50V
C715	1-127-948-11	s	CAPACITOR,FILM 0.0047MF (2012)
C716 *2	1-127-715-11	s	CAPACITOR,CERAMIC 0.22MF B1608
*1	1-107-826-11	s	CAPACITOR,CHIP CERAMIC 0.1MF
C717	1-127-948-11	s	CAPACITOR,FILM 0.0047MF (2012)
C718	1-164-690-11	s	CAPACITOR ,CERAMIC 2200PF CH
C719	1-162-915-11	s	CAPACITOR,CERAMIC 10PF/50V CH
C720	1-162-919-11	s	CAPACITOR,CERAMIC 22PF/50V CH
C721	1-115-153-11	s	CAPACITOR,ELECT 4.7MF/16V(BP)
C722	1-115-153-11	s	CAPACITOR,ELECT 4.7MF/16V(BP)
C723	1-162-927-11	s	CAPACITOR,CERAMIC 100PF/50V CH
C724	1-162-919-11	s	CAPACITOR,CERAMIC 22PF/50V CH
C725	1-115-153-11	s	CAPACITOR,ELECT 4.7MF/16V(BP)
C726	1-162-927-11	s	CAPACITOR,CERAMIC 100PF/50V CH
C727	1-115-153-11	s	CAPACITOR,ELECT 4.7MF/16V(BP)
C728	1-126-399-11	s	CAPACITOR ELECT 10MF/35V(CHIP)
C729	1-126-399-11	s	CAPACITOR ELECT 10MF/35V(CHIP)
C730	1-107-826-11	s	CAPACITOR,CHIP CERAMIC 0.1MF
C731	1-107-826-11	s	CAPACITOR,CHIP CERAMIC 0.1MF
C732	1-163-275-11	s	CAPACITOR CERAMIC 1000PF/50V
C733	1-126-391-11	s	CAPACITOR ELECT 47MF/6.3V(105)
C734	1-162-919-11	s	CAPACITOR,CERAMIC 22PF/50V CH
C736	1-162-919-11	s	CAPACITOR,CERAMIC 22PF/50V CH
C740	1-107-826-11	s	CAPACITOR,CHIP CERAMIC 0.1MF
C741	1-107-826-11	s	CAPACITOR,CHIP CERAMIC 0.1MF
C742	1-107-826-11	s	CAPACITOR,CHIP CERAMIC 0.1MF
C743	1-107-826-11	s	CAPACITOR,CHIP CERAMIC 0.1MF
C756	1-107-826-11	s	CAPACITOR,CHIP CERAMIC 0.1MF
C757	1-162-919-11	s	CAPACITOR,CERAMIC 22PF/50V CH
C758	1-162-919-11	s	CAPACITOR,CERAMIC 22PF/50V CH
C802	1-127-948-11	s	CAPACITOR,FILM 0.0047MF (2012)
C803	1-164-230-11	s	CAPACITOR,CERAMIC 220PF/50V
C804	1-107-826-11	s	CAPACITOR,CHIP CERAMIC 0.1MF
C805 *2	1-127-692-11	s	CAP, CHIP CERAMIC 10MF B 3216
*1	1-104-851-11	s	CAPACITOR,TANTALUM 10MF/10V
C806	1-164-690-11	s	CAPACITOR ,CERAMIC 2200PF CH
C807 *2	1-127-692-11	s	CAP, CHIP CERAMIC 10MF B 3216
*1	1-104-851-11	s	CAPACITOR,TANTALUM 10MF/10V
C808	1-164-217-11	s	CAPACITOR,CERAMIC 150PF/50V CH
C809	1-164-217-11	s	CAPACITOR,CERAMIC 150PF/50V CH
C810	1-164-217-11	s	CAPACITOR,CERAMIC 150PF/50V CH
C811	1-164-217-11	s	CAPACITOR,CERAMIC 150PF/50V CH
C812	1-164-217-11	s	CAPACITOR,CERAMIC 150PF/50V CH
C813	1-164-217-11	s	CAPACITOR,CERAMIC 150PF/50V CH
C814	1-164-230-11	s	CAPACITOR,CERAMIC 220PF/50V
C815	1-127-948-11	s	CAPACITOR,FILM 0.0047MF (2012)
C816 *2	1-127-715-11	s	CAPACITOR,CERAMIC 0.22MF B1608
*1	1-107-826-11	s	CAPACITOR,CHIP CERAMIC 0.1MF

(APR-52 BOARD for RECORDER)

Ref. No. or Q'ty	Part No.	SP	Description
C817	1-127-948-11	s	CAPACITOR,FILM 0.0047MF (2012)
C818	1-164-690-11	s	CAPACITOR ,CERAMIC 2200PF CH
C819	1-162-915-11	s	CAPACITOR,CERAMIC 10PF/50V CH
C820	1-162-919-11	s	CAPACITOR,CERAMIC 22PF/50V CH
C821	1-115-153-11	s	CAPACITOR,ELECT 4.7MF/16V(BP)
C822	1-115-153-11	s	CAPACITOR,ELECT 4.7MF/16V(BP)
C823	1-162-927-11	s	CAPACITOR,CERAMIC 100PF/50V CH
C824	1-162-919-11	s	CAPACITOR,CERAMIC 22PF/50V CH
C825	1-115-153-11	s	CAPACITOR,ELECT 4.7MF/16V(BP)
C826	1-162-927-11	s	CAPACITOR,CERAMIC 100PF/50V CH
C827	1-115-153-11	s	CAPACITOR,ELECT 4.7MF/16V(BP)
C828	1-126-399-11	s	CAPACITOR ELECT 10MF/35V(CHIP)
C829	1-126-399-11	s	CAPACITOR ELECT 10MF/35V(CHIP)
C830	1-107-826-11	s	CAPACITOR,CHIP CERAMIC 0.1MF
C831	1-107-826-11	s	CAPACITOR,CHIP CERAMIC 0.1MF
C832	1-163-275-11	s	CAPACITOR CERAMIC 1000PF/50V
C833	1-126-391-11	s	CAPACITOR ELECT 47MF/6.3V(105)
C834	1-162-919-11	s	CAPACITOR,CERAMIC 22PF/50V CH
C836	1-162-919-11	s	CAPACITOR,CERAMIC 22PF/50V CH
C840	1-107-826-11	s	CAPACITOR,CHIP CERAMIC 0.1MF
C841	1-107-826-11	s	CAPACITOR,CHIP CERAMIC 0.1MF
C842	1-107-826-11	s	CAPACITOR,CHIP CERAMIC 0.1MF
C843	1-107-826-11	s	CAPACITOR,CHIP CERAMIC 0.1MF
C856	1-107-826-11	s	CAPACITOR,CHIP CERAMIC 0.1MF
C857	1-162-919-11	s	CAPACITOR,CERAMIC 22PF/50V CH
C858	1-162-919-11	s	CAPACITOR,CERAMIC 22PF/50V CH
C900	1-107-826-11	s	CAPACITOR,CHIP CERAMIC 0.1MF
C901	1-107-826-11	s	CAPACITOR,CHIP CERAMIC 0.1MF
C904	1-107-826-11	s	CAPACITOR,CHIP CERAMIC 0.1MF
C905 *2	1-127-692-11	s	CAP, CHIP CERAMIC 10MF B 3216
*1	1-104-851-11	s	CAPACITOR,TANTALUM 10MF/10V
C906	1-163-275-11	s	CAPACITOR CERAMIC 1000PF/50V
C907 *2	1-127-692-11	s	CAP, CHIP CERAMIC 10MF B 3216
*1	1-104-851-11	s	CAPACITOR,TANTALUM 10MF/10V
C908	1-164-217-11	s	CAPACITOR,CERAMIC 150PF/50V CH
C909	1-164-217-11	s	CAPACITOR,CERAMIC 150PF/50V CH
C910	1-164-217-11	s	CAPACITOR,CERAMIC 150PF/50V CH
C911	1-164-217-11	s	CAPACITOR,CERAMIC 150PF/50V CH
C912	1-164-217-11	s	CAPACITOR,CERAMIC 150PF/50V CH
C913	1-164-217-11	s	CAPACITOR,CERAMIC 150PF/50V CH
C914	1-163-275-11	s	CAPACITOR CERAMIC 1000PF/50V
C915	1-127-948-11	s	CAPACITOR,FILM 0.0047MF (2012)
C916 *2	1-127-715-11	s	CAPACITOR,CERAMIC 0.22MF B1608
*1	1-107-826-11	s	CAPACITOR,CHIP CERAMIC 0.1MF
C917	1-127-948-11	s	CAPACITOR,FILM 0.0047MF (2012)
C918	1-164-690-11	s	CAPACITOR ,CERAMIC 2200PF CH
C920	1-162-915-11	s	CAPACITOR,CERAMIC 10PF/50V CH
C921	1-162-919-11	s	CAPACITOR,CERAMIC 22PF/50V CH
C922	1-115-153-11	s	CAPACITOR,ELECT 4.7MF/16V(BP)
C923	1-115-153-11	s	CAPACITOR,ELECT 4.7MF/16V(BP)
C924	1-162-927-11	s	CAPACITOR,CERAMIC 100PF/50V CH
C925	1-162-919-11	s	CAPACITOR,CERAMIC 22PF/50V CH
C926	1-115-153-11	s	CAPACITOR,ELECT 4.7MF/16V(BP)
C927	1-162-927-11	s	CAPACITOR,CERAMIC 100PF/50V CH
C928	1-115-153-11	s	CAPACITOR,ELECT 4.7MF/16V(BP)
C929	1-126-399-11	s	CAPACITOR ELECT 10MF/35V(CHIP)
C930	1-126-399-11	s	CAPACITOR ELECT 10MF/35V(CHIP)
C931	1-107-826-11	s	CAPACITOR,CHIP CERAMIC 0.1MF
C932	1-107-826-11	s	CAPACITOR,CHIP CERAMIC 0.1MF

(APR-52 BOARD for RECORDER)

Ref. No. or Q'ty	Part No.	SP	Description
C933	1-163-275-11	s	CAPACITOR CERAMIC 1000PF/50V
C934	1-126-391-11	s	CAPACITOR ELECT 47MF/6.3V(105)
C935	1-162-919-11	s	CAPACITOR,CERAMIC 22PF/50V CH
C937	1-162-919-11	s	CAPACITOR,CERAMIC 22PF/50V CH
C940	1-107-826-11	s	CAPACITOR,CHIP CERAMIC 0.1MF
C941	1-107-826-11	s	CAPACITOR,CHIP CERAMIC 0.1MF
C942	1-107-826-11	s	CAPACITOR,CHIP CERAMIC 0.1MF
C943	1-107-826-11	s	CAPACITOR,CHIP CERAMIC 0.1MF
C945	1-164-315-11	s	CAPACITOR,CERAMIC 470PF/50V CH
C956	1-107-826-11	s	CAPACITOR,CHIP CERAMIC 0.1MF
C957	1-162-919-11	s	CAPACITOR,CERAMIC 22PF/50V CH
C958	1-162-919-11	s	CAPACITOR,CERAMIC 22PF/50V CH
C959	1-162-927-11	s	CAPACITOR,CERAMIC 100PF/50V CH
C1000	1-162-919-11	s	CAPACITOR,CERAMIC 22PF/50V CH
C1002	1-162-919-11	s	CAPACITOR,CERAMIC 22PF/50V CH
C1004	1-107-826-11	s	CAPACITOR,CHIP CERAMIC 0.1MF
C1005 *2	1-127-692-11	s	CAP, CHIP CERAMIC 10MF B 3216
*1	1-104-851-11	s	CAPACITOR,TANTALUM 10MF/10V
C1006	1-163-275-11	s	CAPACITOR CERAMIC 1000PF/50V
C1007 *2	1-127-692-11	s	CAP, CHIP CERAMIC 10MF B 3216
*1	1-104-851-11	s	CAPACITOR,TANTALUM 10MF/10V
C1008	1-164-217-11	s	CAPACITOR,CERAMIC 150PF/50V CH
C1009	1-164-217-11	s	CAPACITOR,CERAMIC 150PF/50V CH
C1010	1-164-217-11	s	CAPACITOR,CERAMIC 150PF/50V CH
C1011	1-164-217-11	s	CAPACITOR,CERAMIC 150PF/50V CH
C1012	1-164-217-11	s	CAPACITOR,CERAMIC 150PF/50V CH
C1013	1-164-217-11	s	CAPACITOR,CERAMIC 150PF/50V CH
C1014	1-163-275-11	s	CAPACITOR CERAMIC 1000PF/50V
C1015	1-127-948-11	s	CAPACITOR,FILM 0.0047MF (2012)
C1016 *2	1-127-715-11	s	CAPACITOR,CERAMIC 0.22MF B1608
*1	1-107-826-11	s	CAPACITOR,CHIP CERAMIC 0.1MF
C1017	1-127-948-11	s	CAPACITOR,FILM 0.0047MF (2012)
C1018	1-164-690-11	s	CAPACITOR ,CERAMIC 2200PF CH
C1020	1-162-915-11	s	CAPACITOR,CERAMIC 10PF/50V CH
C1021	1-162-919-11	s	CAPACITOR,CERAMIC 22PF/50V CH
C1022	1-115-153-11	s	CAPACITOR,ELECT 4.7MF/16V(BP)
C1023	1-115-153-11	s	CAPACITOR,ELECT 4.7MF/16V(BP)
C1024	1-162-927-11	s	CAPACITOR,CERAMIC 100PF/50V CH
C1025	1-162-919-11	s	CAPACITOR,CERAMIC 22PF/50V CH
C1026	1-115-153-11	s	CAPACITOR,ELECT 4.7MF/16V(BP)
C1027	1-162-927-11	s	CAPACITOR,CERAMIC 100PF/50V CH
C1028	1-115-153-11	s	CAPACITOR,ELECT 4.7MF/16V(BP)
C1029	1-126-399-11	s	CAPACITOR ELECT 10MF/35V(CHIP)
C1030	1-126-399-11	s	CAPACITOR ELECT 10MF/35V(CHIP)
C1031	1-107-826-11	s	CAPACITOR,CHIP CERAMIC 0.1MF
C1032	1-107-826-11	s	CAPACITOR,CHIP CERAMIC 0.1MF
C1033	1-163-275-11	s	CAPACITOR CERAMIC 1000PF/50V
C1034	1-126-391-11	s	CAPACITOR ELECT 47MF/6.3V(105)
C1040	1-107-826-11	s	CAPACITOR,CHIP CERAMIC 0.1MF
C1041	1-107-826-11	s	CAPACITOR,CHIP CERAMIC 0.1MF
C1042	1-107-826-11	s	CAPACITOR,CHIP CERAMIC 0.1MF
C1043	1-107-826-11	s	CAPACITOR,CHIP CERAMIC 0.1MF
C1045	1-164-315-11	s	CAPACITOR,CERAMIC 470PF/50V CH
C1056	1-107-826-11	s	CAPACITOR,CHIP CERAMIC 0.1MF
C1057	1-162-919-11	s	CAPACITOR,CERAMIC 22PF/50V CH
C1058	1-162-919-11	s	CAPACITOR,CERAMIC 22PF/50V CH
C1059	1-162-927-11	s	CAPACITOR,CERAMIC 100PF/50V CH
C1100	1-107-826-11	s	CAPACITOR,CHIP CERAMIC 0.1MF
C1101	1-107-826-11	s	CAPACITOR,CHIP CERAMIC 0.1MF

(APR-52 BOARD for RECORDER)

Ref. No. or Q'ty	Part No.	SP	Description
C1102	1-107-826-11	s	CAPACITOR,CHIP CERAMIC 0.1MF
C1103	1-107-826-11	s	CAPACITOR,CHIP CERAMIC 0.1MF
C1104	1-107-826-11	s	CAPACITOR,CHIP CERAMIC 0.1MF
C1119	1-107-826-11	s	CAPACITOR,CHIP CERAMIC 0.1MF
C1120	1-107-826-11	s	CAPACITOR,CHIP CERAMIC 0.1MF
C1121	1-107-826-11	s	CAPACITOR,CHIP CERAMIC 0.1MF
C1122	1-107-826-11	s	CAPACITOR,CHIP CERAMIC 0.1MF
C1123	1-107-826-11	s	CAPACITOR,CHIP CERAMIC 0.1MF
C1124	1-107-826-11	s	CAPACITOR,CHIP CERAMIC 0.1MF
C1200	1-107-826-11	s	CAPACITOR,CHIP CERAMIC 0.1MF
C1205	1-107-826-11	s	CAPACITOR,CHIP CERAMIC 0.1MF
C1206	1-107-826-11	s	CAPACITOR,CHIP CERAMIC 0.1MF
C1207	1-107-826-11	s	CAPACITOR,CHIP CERAMIC 0.1MF
C1209	1-162-927-11	s	CAPACITOR,CERAMIC 100PF/50V CH
C1210	1-107-826-11	s	CAPACITOR,CHIP CERAMIC 0.1MF
C1211	1-107-826-11	s	CAPACITOR,CHIP CERAMIC 0.1MF
C1213	1-107-826-11	s	CAPACITOR,CHIP CERAMIC 0.1MF
C1214	1-107-826-11	s	CAPACITOR,CHIP CERAMIC 0.1MF
C1215	1-107-826-11	s	CAPACITOR,CHIP CERAMIC 0.1MF
C1400	1-107-826-11	s	CAPACITOR,CHIP CERAMIC 0.1MF
C1401	1-107-826-11	s	CAPACITOR,CHIP CERAMIC 0.1MF
C1402	1-107-826-11	s	CAPACITOR,CHIP CERAMIC 0.1MF
C1403	1-107-826-11	s	CAPACITOR,CHIP CERAMIC 0.1MF
C1404	1-107-826-11	s	CAPACITOR,CHIP CERAMIC 0.1MF
C1405	1-107-826-11	s	CAPACITOR,CHIP CERAMIC 0.1MF
C1406	1-107-826-11	s	CAPACITOR,CHIP CERAMIC 0.1MF
C1407	1-107-826-11	s	CAPACITOR,CHIP CERAMIC 0.1MF
C1408	1-107-826-11	s	CAPACITOR,CHIP CERAMIC 0.1MF
C1409	1-107-826-11	s	CAPACITOR,CHIP CERAMIC 0.1MF
C1410	1-107-826-11	s	CAPACITOR,CHIP CERAMIC 0.1MF
C1411	1-107-826-11	s	CAPACITOR,CHIP CERAMIC 0.1MF
C1412	1-107-826-11	s	CAPACITOR,CHIP CERAMIC 0.1MF
C1413	1-107-826-11	s	CAPACITOR,CHIP CERAMIC 0.1MF
C1414	1-107-826-11	s	CAPACITOR,CHIP CERAMIC 0.1MF
C1415	1-107-826-11	s	CAPACITOR,CHIP CERAMIC 0.1MF
C1416	1-107-826-11	s	CAPACITOR,CHIP CERAMIC 0.1MF
C1417	1-107-826-11	s	CAPACITOR,CHIP CERAMIC 0.1MF
C1418	1-107-826-11	s	CAPACITOR,CHIP CERAMIC 0.1MF
C1419	1-107-826-11	s	CAPACITOR,CHIP CERAMIC 0.1MF
C1420	1-107-826-11	s	CAPACITOR,CHIP CERAMIC 0.1MF
C1421	1-107-826-11	s	CAPACITOR,CHIP CERAMIC 0.1MF
C1422	1-107-826-11	s	CAPACITOR,CHIP CERAMIC 0.1MF
C1423	1-107-826-11	s	CAPACITOR,CHIP CERAMIC 0.1MF
C1424	1-107-826-11	s	CAPACITOR,CHIP CERAMIC 0.1MF
C1425	1-107-826-11	s	CAPACITOR,CHIP CERAMIC 0.1MF
C1426	1-107-826-11	s	CAPACITOR,CHIP CERAMIC 0.1MF
C1427	1-107-826-11	s	CAPACITOR,CHIP CERAMIC 0.1MF
C1428	1-107-826-11	s	CAPACITOR,CHIP CERAMIC 0.1MF
C1429	1-107-826-11	s	CAPACITOR,CHIP CERAMIC 0.1MF
C1430	1-107-826-11	s	CAPACITOR,CHIP CERAMIC 0.1MF
C1431	1-107-826-11	s	CAPACITOR,CHIP CERAMIC 0.1MF
C1432	1-107-826-11	s	CAPACITOR,CHIP CERAMIC 0.1MF
C1433	1-107-826-11	s	CAPACITOR,CHIP CERAMIC 0.1MF
C1434	1-107-826-11	s	CAPACITOR,CHIP CERAMIC 0.1MF
C1435	1-107-826-11	s	CAPACITOR,CHIP CERAMIC 0.1MF
C1436	1-107-826-11	s	CAPACITOR,CHIP CERAMIC 0.1MF
C1437	1-107-826-11	s	CAPACITOR,CHIP CERAMIC 0.1MF
C1438	1-107-826-11	s	CAPACITOR,CHIP CERAMIC 0.1MF
C1439	1-107-826-11	s	CAPACITOR,CHIP CERAMIC 0.1MF

(APR-52 BOARD for RECORDER)

Ref. No. or Q'ty	Part No.	SP	Description
C1440	1-107-826-11	s	CAPACITOR,CHIP CERAMIC 0.1MF
C1500	1-107-826-11	s	CAPACITOR,CHIP CERAMIC 0.1MF
C1501	1-107-826-11	s	CAPACITOR,CHIP CERAMIC 0.1MF
C1502	1-107-826-11	s	CAPACITOR,CHIP CERAMIC 0.1MF
C1503	1-107-826-11	s	CAPACITOR,CHIP CERAMIC 0.1MF
C1504	1-162-927-11	s	CAPACITOR,CERAMIC 100PF/50V CH
C1505	1-162-927-11	s	CAPACITOR,CERAMIC 100PF/50V CH
C1506	1-107-826-11	s	CAPACITOR,CHIP CERAMIC 0.1MF
C1507	1-107-826-11	s	CAPACITOR,CHIP CERAMIC 0.1MF
C1508	1-162-927-11	s	CAPACITOR,CERAMIC 100PF/50V CH
C1509	1-107-826-11	s	CAPACITOR,CHIP CERAMIC 0.1MF
C1510	1-107-826-11	s	CAPACITOR,CHIP CERAMIC 0.1MF
C1511	1-162-927-11	s	CAPACITOR,CERAMIC 100PF/50V CH
C1512	1-162-927-11	s	CAPACITOR,CERAMIC 100PF/50V CH
C1513 *2	deleted		
*1	1-107-826-11	s	CAPACITOR,CHIP CERAMIC 0.1MF
C1600	1-107-826-11	s	CAPACITOR,CHIP CERAMIC 0.1MF
C1601	1-107-826-11	s	CAPACITOR,CHIP CERAMIC 0.1MF
C1602	1-107-826-11	s	CAPACITOR,CHIP CERAMIC 0.1MF
C1603	1-107-826-11	s	CAPACITOR,CHIP CERAMIC 0.1MF
C1604	1-107-826-11	s	CAPACITOR,CHIP CERAMIC 0.1MF
C1605	1-107-826-11	s	CAPACITOR,CHIP CERAMIC 0.1MF
C1606	1-107-826-11	s	CAPACITOR,CHIP CERAMIC 0.1MF
C1607	1-107-826-11	s	CAPACITOR,CHIP CERAMIC 0.1MF
C1608 *2	1-107-826-11	s	CAPACITOR,CHIP CERAMIC 0.1MF
C1609	1-107-826-11	s	CAPACITOR,CHIP CERAMIC 0.1MF
C1611 *2	deleted		
*1	1-107-826-11	s	CAPACITOR,CHIP CERAMIC 0.1MF
C1612 *2	deleted		
*1	1-104-851-11	s	CAPACITOR,TANTALUM 10MF/10V
C1613	1-107-826-11	s	CAPACITOR,CHIP CERAMIC 0.1MF
C1700	1-107-826-11	s	CAPACITOR,CHIP CERAMIC 0.1MF
C1701	1-107-826-11	s	CAPACITOR,CHIP CERAMIC 0.1MF
C1704	1-107-826-11	s	CAPACITOR,CHIP CERAMIC 0.1MF
C1705 *2	1-100-159-91	s	CAP, CERAMIC 22MF B (SMD) 3216
*1	1-107-826-11	s	CAPACITOR,CHIP CERAMIC 0.1MF
C1706 *2	1-100-159-91	s	CAP, CERAMIC 22MF B (SMD) 3216
*1	1-107-826-11	s	CAPACITOR,CHIP CERAMIC 0.1MF
C1707	1-107-826-11	s	CAPACITOR,CHIP CERAMIC 0.1MF
C1708 *2	1-127-692-11	s	CAP, CHIP CERAMIC 10MF B 3216
*1	1-107-826-11	s	CAPACITOR,CHIP CERAMIC 0.1MF
C1709 *2	1-125-891-11	s	CAPACITOR CERAMIC 0.47MF/10V
C1710 *2	1-127-692-11	s	CAP, CHIP CERAMIC 10MF B 3216
*1	1-107-826-11	s	CAPACITOR,CHIP CERAMIC 0.1MF
C1711	1-126-390-11	s	CAPACITOR ELECT 22MF/6.3V(105)
C1712 *2	1-100-159-91	s	CAP, CERAMIC 22MF B (SMD) 3216
*1	1-126-391-11	s	CAPACITOR ELECT 47MF/6.3V(105)
C1713 *2	1-100-159-91	s	CAP, CERAMIC 22MF B (SMD) 3216
*1	1-126-391-11	s	CAPACITOR ELECT 47MF/6.3V(105)
C1714	1-126-390-11	s	CAPACITOR ELECT 22MF/6.3V(105)
C1715 *2	deleted		
*1	1-126-399-11	s	CAPACITOR ELECT 10MF/35V(CHIP)
C1717 *2	deleted		
*1	1-126-399-11	s	CAPACITOR ELECT 10MF/35V(CHIP)
C1718 *2	1-127-820-11	s	CAPACITOR, SQUARE CHIP 4.7MF
*1	1-107-686-11	s	CAPACITOR,TANTALUM 4.7MF/16V
C1719	1-126-396-11	s	CAPACITOR,ELECT 47MF/16V(CHIP)
C1722	1-107-826-11	s	CAPACITOR,CHIP CERAMIC 0.1MF
C1723	1-126-390-11	s	CAPACITOR ELECT 22MF/6.3V(105)
C1724	1-107-826-11	s	CAPACITOR,CHIP CERAMIC 0.1MF
C1726 *2	1-107-826-11	s	CAPACITOR,CHIP CERAMIC 0.1MF

(APR-52 BOARD for RECORDER)

Ref. No. or Q'ty	Part No.	SP	Description
C1727 *2	1-107-826-11	s	CAPACITOR,CHIP CERAMIC 0.1MF
C1728 *2	1-127-692-11	s	CAP, CHIP CERAMIC 10MF B 3216
C1733 *2	1-125-889-11	s	CAPACITOR, CERAMIC 2.2MF
*1	1-125-838-11	s	CAPACITOR, CERAMIC 2.2MF/6.3V
C1734 *2	1-100-159-91	s	CAP, CERAMIC 22MF B (SMD) 3216
C1735 *2	1-107-826-11	s	CAPACITOR,CHIP CERAMIC 0.1MF
C1800 *2	1-125-891-11	s	CAPACITOR CERAMIC 0.47MF/10V
*1	1-107-682-11	s	CAPACITOR,CHIP 1MF/16V (3216)
C1801 *2	1-125-891-11	s	CAPACITOR CERAMIC 0.47MF/10V
*1	1-107-682-11	s	CAPACITOR,CHIP 1MF/16V (3216)
C1802	1-162-927-11	s	CAPACITOR,CERAMIC 100PF/50V CH
C1803	1-162-927-11	s	CAPACITOR,CERAMIC 100PF/50V CH
C1804	1-107-826-11	s	CAPACITOR,CHIP CERAMIC 0.1MF
C1805	1-107-826-11	s	CAPACITOR,CHIP CERAMIC 0.1MF
CN1300	1-793-091-11	s	CONNECTOR, BOARD TO BOARD 60P
D100	8-719-801-48	s	DIODE 1SS193
D101 *2	8-719-421-69	s	DIODE MA133
*1	8-719-068-64	s	DIODE MA143A-(TX).SO
D102 *2	8-719-421-69	s	DIODE MA133
*1	8-719-068-64	s	DIODE MA143A-(TX).SO
D103	8-719-801-48	s	DIODE 1SS193
D104	8-719-820-41	s	DIODE 1SS302
D105	8-719-820-41	s	DIODE 1SS302
D200	8-719-801-48	s	DIODE 1SS193
D201 *2	8-719-421-69	s	DIODE MA133
*1	8-719-068-64	s	DIODE MA143A-(TX).SO
D202 *2	8-719-421-69	s	DIODE MA133
*1	8-719-068-64	s	DIODE MA143A-(TX).SO
D203	8-719-801-48	s	DIODE 1SS193
D204	8-719-820-41	s	DIODE 1SS302
D205	8-719-820-41	s	DIODE 1SS302
D300	8-719-801-48	s	DIODE 1SS193
D301 *2	8-719-421-69	s	DIODE MA133
*1	8-719-068-64	s	DIODE MA143A-(TX).SO
D302 *2	8-719-421-69	s	DIODE MA133
*1	8-719-068-64	s	DIODE MA143A-(TX).SO
D303	8-719-801-48	s	DIODE 1SS193
D304	8-719-820-41	s	DIODE 1SS302
D305	8-719-820-41	s	DIODE 1SS302
D400	8-719-801-48	s	DIODE 1SS193
D401 *2	8-719-421-69	s	DIODE MA133
*1	8-719-068-64	s	DIODE MA143A-(TX).SO
D402 *2	8-719-421-69	s	DIODE MA133
*1	8-719-068-64	s	DIODE MA143A-(TX).SO
D403	8-719-801-48	s	DIODE 1SS193
D404	8-719-820-41	s	DIODE 1SS302
D405	8-719-820-41	s	DIODE 1SS302
D500 *2	8-719-421-69	s	DIODE MA133
*1	8-719-068-64	s	DIODE MA143A-(TX).SO
D501 *2	8-719-421-69	s	DIODE MA133
*1	8-719-068-64	s	DIODE MA143A-(TX).SO
D502	8-719-801-48	s	DIODE 1SS193
D503	8-719-017-01	s	DIODE 02DZ4.3-TPH3
D600 *2	8-719-421-69	s	DIODE MA133
*1	8-719-068-64	s	DIODE MA143A-(TX).SO
D601 *2	8-719-421-69	s	DIODE MA133
*1	8-719-068-64	s	DIODE MA143A-(TX).SO
D602	8-719-801-48	s	DIODE 1SS193
D603	8-719-017-01	s	DIODE 02DZ4.3-TPH3
D700 *2	8-719-421-69	s	DIODE MA133
*1	8-719-068-64	s	DIODE MA143A-(TX).SO

(APR-52 BOARD for RECORDER)

Ref. No. or Q'ty	Part No.	SP	Description	
D701 *2	8-719-421-69	s	DIODE MA133	
*1	8-719-068-64	s	DIODE MA143A-(TX).SO	
D702	8-719-801-48	s	DIODE 1SS193	
D703	8-719-017-01	s	DIODE 02DZ4.3-TPH3	
D800 *2	8-719-421-69	s	DIODE MA133	
*1	8-719-068-64	s	DIODE MA143A-(TX).SO	
D801 *2	8-719-421-69	s	DIODE MA133	
*1	8-719-068-64	s	DIODE MA143A-(TX).SO	
D802	8-719-801-48	s	DIODE 1SS193	
D803	8-719-017-01	s	DIODE 02DZ4.3-TPH3	
D900 *2	8-719-421-69	s	DIODE MA133	
*1	8-719-068-64	s	DIODE MA143A-(TX).SO	
D901 *2	8-719-421-69	s	DIODE MA133	
*1	8-719-068-64	s	DIODE MA143A-(TX).SO	
D902	8-719-801-48	s	DIODE 1SS193	
D903	8-719-017-01	s	DIODE 02DZ4.3-TPH3	
D1000 *2	8-719-421-69	s	DIODE MA133	
*1	8-719-068-64	s	DIODE MA143A-(TX).SO	
D1001 *2	8-719-421-69	s	DIODE MA133	
*1	8-719-068-64	s	DIODE MA143A-(TX).SO	
D1002	8-719-801-48	s	DIODE 1SS193	
D1003	8-719-017-01	s	DIODE 02DZ4.3-TPH3	
D1700	8-719-820-41	s	DIODE 1SS302	
D1701 *2	8-719-975-40	s	DIODE RB411D	(RECTI)
*1	8-719-820-41	s	DIODE 1SS302	
D1704 *2	8-719-975-40	s	DIODE RB411D	(RECTI)
*1	8-719-941-04	s	DIODE SB007-03CP	
D1707 *2	8-719-975-40	s	DIODE RB411D	(RECTI)
*1	8-719-941-04	s	DIODE SB007-03CP	
D1708	8-719-047-66	s	LED CL-190D-CD	
D1709	8-719-047-66	s	LED CL-190D-CD	
D1710	8-719-071-10	s	DIODE CL-191HR-CD-T	
D1711	8-719-071-10	s	DIODE CL-191HR-CD-T	
E100	1-535-877-22	s	CHIP,CHECKER (TEST POINT)	
E101	1-535-877-22	s	CHIP,CHECKER (TEST POINT)	
E200	1-535-877-22	s	CHIP,CHECKER (TEST POINT)	
E201	1-535-877-22	s	CHIP,CHECKER (TEST POINT)	
E300	1-535-877-22	s	CHIP,CHECKER (TEST POINT)	
E301	1-535-877-22	s	CHIP,CHECKER (TEST POINT)	
E400	1-535-877-22	s	CHIP,CHECKER (TEST POINT)	
E401	1-535-877-22	s	CHIP,CHECKER (TEST POINT)	
E500	1-535-877-22	s	CHIP,CHECKER (TEST POINT)	
E600	1-535-877-22	s	CHIP,CHECKER (TEST POINT)	
E700	1-535-877-22	s	CHIP,CHECKER (TEST POINT)	
E800	1-535-877-22	s	CHIP,CHECKER (TEST POINT)	
E900	1-535-877-22	s	CHIP,CHECKER (TEST POINT)	
E1000	1-535-877-22	s	CHIP,CHECKER (TEST POINT)	
F1700 ⚠	1-533-999-11	s	FUSE CHIP 2A/125V (6125)	
F1701 ⚠	1-576-270-11	s	FUSE CHIP 4A/125V (6125)	
F1702 ⚠	1-533-999-11	s	FUSE CHIP 2A/125V (6125)	
F1703 ⚠	1-533-999-11	s	FUSE CHIP 2A/125V (6125)	
IC100	8-759-422-21	s	IC NJM4580VTE2	
IC101	8-759-422-21	s	IC NJM4580VTE2	
IC102	8-759-711-85	s	IC NJM4580E-D	
IC103	8-759-194-97	s	IC NJM4560M-D(TE2)	
IC104	8-759-112-66	s	IC UPC812G2	
IC105	8-759-596-41	s	IC THAT2181SB-TE2	
IC106	8-759-194-97	s	IC NJM4560M-D(TE2)	
IC107	8-759-711-85	s	IC NJM4580E-D	
IC108 *2	8-759-638-81	s	IC AK5393VS-E2	
*1	8-759-578-44	s	IC AK5392-VS-E2	

(APR-52 BOARD for RECORDER)

Ref. No. or Q'ty	Part No.	SP	Description	
IC109	8-759-196-96	s	IC TC7SH08FU	(TE85R)
IC111	8-759-392-01	s	IC TC7SH86FU	(TE85R)
IC202	8-759-711-85	s	IC NJM4580E-D	
IC203	8-759-194-97	s	IC NJM4560M-D(TE2)	
IC204	8-759-112-66	s	IC UPC812G2	
IC205	8-759-596-41	s	IC THAT2181SB-TE2	
IC206	8-759-194-97	s	IC NJM4560M-D(TE2)	
IC207	8-759-711-85	s	IC NJM4580E-D	
IC209	8-759-196-96	s	IC TC7SH08FU	(TE85R)
IC211	8-759-392-01	s	IC TC7SH86FU	(TE85R)
IC300	8-759-422-21	s	IC NJM4580VTE2	
IC301	8-759-422-21	s	IC NJM4580VTE2	
IC302	8-759-711-85	s	IC NJM4580E-D	
IC303	8-759-194-97	s	IC NJM4560M-D(TE2)	
IC304	8-759-112-66	s	IC UPC812G2	
IC305	8-759-596-41	s	IC THAT2181SB-TE2	
IC306	8-759-194-97	s	IC NJM4560M-D(TE2)	
IC307	8-759-711-85	s	IC NJM4580E-D	
IC308 *2	8-759-638-81	s	IC AK5393VS-E2	
*1	8-759-578-44	s	IC AK5392-VS-E2	
IC309	8-759-196-96	s	IC TC7SH08FU	(TE85R)
IC311	8-759-392-01	s	IC TC7SH86FU	(TE85R)
IC402	8-759-711-85	s	IC NJM4580E-D	
IC403	8-759-194-97	s	IC NJM4560M-D(TE2)	
IC404	8-759-112-66	s	IC UPC812G2	
IC405	8-759-596-41	s	IC THAT2181SB-TE2	
IC406	8-759-194-97	s	IC NJM4560M-D(TE2)	
IC407	8-759-711-85	s	IC NJM4580E-D	
IC409	8-759-196-96	s	IC TC7SH08FU	(TE85R)
IC411	8-759-392-01	s	IC TC7SH86FU	(TE85R)
IC500	8-759-481-08	s	IC TC7SET02FU	(TE85R)
IC501	8-759-638-82	s	IC SM5847AF	
IC502 *2	8-759-196-97	s	IC TC7SH32FU	(TE85R)
IC503	6-700-152-01	s	IC SM5865CM-E2	
IC504	8-759-711-85	s	IC NJM4580E-D	
IC505	8-759-711-85	s	IC NJM4580E-D	
IC506	8-759-194-97	s	IC NJM4560M-D(TE2)	
IC507	8-759-194-97	s	IC NJM4560M-D(TE2)	
IC508	8-759-194-97	s	IC NJM4560M-D(TE2)	
IC509	8-759-700-96	s	IC NJM5534M	
IC511	8-759-422-21	s	IC NJM4580VTE2	
IC512	8-759-700-96	s	IC NJM5534M	
IC514	8-759-700-96	s	IC NJM5534M	
IC515	8-759-700-96	s	IC NJM5534M	
IC603	6-700-152-01	s	IC SM5865CM-E2	
IC604	8-759-711-85	s	IC NJM4580E-D	
IC605	8-759-711-85	s	IC NJM4580E-D	
IC606	8-759-194-97	s	IC NJM4560M-D(TE2)	
IC607	8-759-194-97	s	IC NJM4560M-D(TE2)	
IC608	8-759-194-97	s	IC NJM4560M-D(TE2)	
IC609	8-759-700-96	s	IC NJM5534M	
IC611	8-759-422-21	s	IC NJM4580VTE2	
IC612	8-759-700-96	s	IC NJM5534M	
IC614	8-759-700-96	s	IC NJM5534M	
IC615	8-759-700-96	s	IC NJM5534M	
IC700	8-759-481-08	s	IC TC7SET02FU	(TE85R)
IC701	8-759-638-82	s	IC SM5847AF	
IC702 *2	8-759-196-97	s	IC TC7SH32FU	(TE85R)
IC703	6-700-152-01	s	IC SM5865CM-E2	

(APR-52 BOARD for RECORDER)

Ref. No. or Q'ty	Part No.	SP	Description
IC704	8-759-711-85	s	IC NJM4580E-D
IC705	8-759-711-85	s	IC NJM4580E-D
IC706	8-759-194-97	s	IC NJM4560M-D(TE2)
IC707	8-759-194-97	s	IC NJM4560M-D(TE2)
IC708	8-759-194-97	s	IC NJM4560M-D(TE2)
IC709	8-759-700-96	s	IC NJM5534M
IC711	8-759-422-21	s	IC NJM4580VTE2
IC712	8-759-700-96	s	IC NJM5534M
IC714	8-759-700-96	s	IC NJM5534M
IC715	8-759-700-96	s	IC NJM5534M
IC803	6-700-152-01	s	IC SM5865CM-E2
IC804	8-759-711-85	s	IC NJM4580E-D
IC805	8-759-711-85	s	IC NJM4580E-D
IC806	8-759-194-97	s	IC NJM4560M-D(TE2)
IC807	8-759-194-97	s	IC NJM4560M-D(TE2)
IC808	8-759-194-97	s	IC NJM4560M-D(TE2)
IC809	8-759-700-96	s	IC NJM5534M
IC811	8-759-422-21	s	IC NJM4580VTE2
IC812	8-759-700-96	s	IC NJM5534M
IC814	8-759-700-96	s	IC NJM5534M
IC815	8-759-700-96	s	IC NJM5534M
IC900	8-759-481-08	s	IC TC7SET02FU (TE85R)
IC901	8-759-638-82	s	IC SM5847AF
IC902 *2	8-759-196-97	s	IC TC7SH32FU (TE85R)
IC903	6-700-152-01	s	IC SM5865CM-E2
IC904	8-759-711-85	s	IC NJM4580E-D
IC905	8-759-711-85	s	IC NJM4580E-D
IC906	8-759-194-97	s	IC NJM4560M-D(TE2)
IC907	8-759-194-97	s	IC NJM4560M-D(TE2)
IC908	8-759-194-97	s	IC NJM4560M-D(TE2)
IC909	8-759-700-96	s	IC NJM5534M
IC911	8-759-422-21	s	IC NJM4580VTE2
IC912	8-759-700-96	s	IC NJM5534M
IC914	8-759-700-96	s	IC NJM5534M
IC915	8-759-700-96	s	IC NJM5534M
IC1003	6-700-152-01	s	IC SM5865CM-E2
IC1004	8-759-711-85	s	IC NJM4580E-D
IC1005	8-759-711-85	s	IC NJM4580E-D
IC1006	8-759-194-97	s	IC NJM4560M-D(TE2)
IC1007	8-759-194-97	s	IC NJM4560M-D(TE2)
IC1008	8-759-194-97	s	IC NJM4560M-D(TE2)
IC1009	8-759-700-96	s	IC NJM5534M
IC1011	8-759-422-21	s	IC NJM4580VTE2
IC1012	8-759-700-96	s	IC NJM5534M
IC1014	8-759-700-96	s	IC NJM5534M
IC1015	8-759-700-96	s	IC NJM5534M
IC1100	8-759-549-15	s	IC SN74LV245APWR
IC1120	8-759-524-10	s	IC TC74VHC157FT (EL)
IC1121	8-759-524-10	s	IC TC74VHC157FT (EL)
IC1200*2	6-704-659-01	s	IC AD1896AYRSRL
*1	6-701-388-01	s	IC AD1896YRSRL
IC1201*2	6-704-659-01	s	IC AD1896AYRSRL
*1	6-701-388-01	s	IC AD1896YRSRL
IC1202	8-759-524-10	s	IC TC74VHC157FT (EL)
IC1203	8-759-524-10	s	IC TC74VHC157FT (EL)
IC1204*2	6-704-659-01	s	IC AD1896AYRSRL
*1	6-701-388-01	s	IC AD1896YRSRL
IC1205*2	6-704-659-01	s	IC AD1896AYRSRL
*1	6-701-388-01	s	IC AD1896YRSRL

(APR-52 BOARD for RECORDER)

Ref. No. or Q'ty	Part No.	SP	Description
IC1211	8-759-524-49	s	IC TC74VHC540FT (EL)
IC1216	8-759-523-94	s	IC TC74VHC32FT(EL)
IC1217	8-759-523-81	s	IC TC74VHC08FT(EL)
IC1218	8-759-530-31	s	IC TC74VHC4040FT(EL)
IC1219	8-759-523-95	s	IC TC74VHC74FT(EL)
IC1220*2	deleted		
*1	8-759-271-86	s	IC TC7SH04FU
IC1400	8-759-549-15	s	IC SN74LV245APWR
IC1401	8-759-549-15	s	IC SN74LV245APWR
IC1402	8-759-549-15	s	IC SN74LV245APWR
IC1403	8-759-549-15	s	IC SN74LV245APWR
IC1404	8-759-549-15	s	IC SN74LV245APWR
IC1405	8-759-549-15	s	IC SN74LV245APWR
IC1406	8-759-524-09	s	IC TC74VHC153FT (EL)
IC1407	8-759-524-09	s	IC TC74VHC153FT (EL)
IC1408	8-759-524-09	s	IC TC74VHC153FT (EL)
IC1409	8-759-524-09	s	IC TC74VHC153FT (EL)
IC1410	8-759-524-09	s	IC TC74VHC153FT (EL)
IC1411	8-759-524-09	s	IC TC74VHC153FT (EL)
IC1412	8-759-524-09	s	IC TC74VHC153FT (EL)
IC1413	8-759-524-09	s	IC TC74VHC153FT (EL)
IC1414*2	deleted		
*1	8-759-196-96	s	IC TC7SH08FU (TE85R)
IC1415	8-759-524-09	s	IC TC74VHC153FT (EL)
IC1416	8-759-524-09	s	IC TC74VHC153FT (EL)
IC1417	8-759-549-15	s	IC SN74LV245APWR
IC1418	8-759-549-15	s	IC SN74LV245APWR
IC1419	8-759-524-09	s	IC TC74VHC153FT (EL)
IC1420	8-759-524-09	s	IC TC74VHC153FT (EL)
IC1423	8-759-549-15	s	IC SN74LV245APWR
IC1425	8-759-656-14	o	IC CXD9102AR
IC1426*2	deleted		
*1	8-759-196-96	s	IC TC7SH08FU (TE85R)
IC1427	8-759-549-01	s	IC SN74LV125APWR
IC1428	8-759-196-96	s	IC TC7SH08FU (TE85R)
IC1429	8-759-524-49	s	IC TC74VHC540FT (EL)
IC1430*2	deleted		
*1	8-759-196-96	s	IC TC7SH08FU (TE85R)
IC1431	8-759-549-15	s	IC SN74LV245APWR
IC1432*2	deleted		
*1	8-759-196-96	s	IC TC7SH08FU (TE85R)
IC1433*2	deleted		
*1	8-759-196-96	s	IC TC7SH08FU (TE85R)
IC1434	8-759-524-10	s	IC TC74VHC157FT (EL)
IC1435*2	deleted		
*1	8-759-196-96	s	IC TC7SH08FU (TE85R)
IC1436	8-759-524-10	s	IC TC74VHC157FT (EL)
IC1437	8-759-524-27	s	IC TC74VHC244FT(EL)
IC1438	8-759-524-09	s	IC TC74VHC153FT (EL)
IC1439	8-759-524-09	s	IC TC74VHC153FT (EL)
IC1500	8-759-549-15	s	IC SN74LV245APWR
IC1501	8-759-549-15	s	IC SN74LV245APWR
IC1502	8-759-549-15	s	IC SN74LV245APWR
IC1503	8-759-549-15	s	IC SN74LV245APWR
IC1505	8-759-524-07	s	IC TC74VHC138FT(EL)
IC1506	8-752-392-03	s	IC CXD1095BR
IC1507	8-752-392-03	s	IC CXD1095BR
IC1508	8-752-392-03	s	IC CXD1095BR
IC1509	8-759-524-07	s	IC TC74VHC138FT(EL)
IC1510*2	deleted		
*1	8-759-491-51	s	IC TC74VHCT245AFT(EL)

(APR-52 BOARD for RECORDER)

Ref. No. or Q'ty	Part No.	SP	Description
IC1600	8-759-392-77	s	IC SN74LVC245APW (E20)
IC1601	8-759-392-77	s	IC SN74LVC245APW (E20)
IC1602	8-759-392-77	s	IC SN74LVC245APW (E20)
IC1603	8-759-524-09	s	IC TC74VHC153FT (EL)
IC1604	8-759-524-09	s	IC TC74VHC153FT (EL)
IC1605	8-759-524-09	s	IC TC74VHC153FT (EL)
IC1606	8-759-392-77	s	IC SN74LVC245APW (E20)
IC1607	8-759-392-77	s	IC SN74LVC245APW (E20)
IC1608	8-759-523-95	s	IC TC74VHC74FT(EL)
IC1609	8-759-196-96	s	IC TC7SH08FU (TE85R)
IC1610	8-759-271-86	s	IC TC7SH04FU
IC1611	8-759-271-86	s	IC TC7SH04FU
IC1612	8-759-523-95	s	IC TC74VHC74FT(EL)
IC1613*2	8-759-675-47	s	IC SN74LVC04APWR
*1	8-759-392-77	s	IC SN74LVC245APW (E20)
IC1614	8-759-523-95	s	IC TC74VHC74FT(EL)
IC1615*2	deleted		
*1	8-759-196-96	s	IC TC7SH08FU (TE85R)
IC1616	8-759-196-96	s	IC TC7SH08FU (TE85R)
IC1617	8-759-271-86	s	IC TC7SH04FU
IC1618*2	deleted		
*1	8-759-523-97	s	IC TC74VHC123AFT(EL)
IC1700	8-759-539-89	s	IC LM2990SX-5.0
IC1701*2	8-759-642-22	s	IC UPC29M05T-E2
*1	8-759-539-90	s	IC LM2940SX-5.0
IC1702*2	6-703-188-01	s	IC S-80827CNNB-B8MT2G
*1	8-759-542-87	s	IC S-80827ANUP-EDQ-T2
IC1703*2	6-701-871-11	s	IC TK72150MCL-G
IC1704*2	6-702-519-01	s	IC S-80840CNNB-B8ZT2G
*1	8-759-542-91	s	IC S-80840ANUP-ED4-T2
IC1705*2	8-759-523-83	s	IC TC74VHC11FT(EL)
IC1706*2	8-759-679-05	s	IC TC7WH34FU(TE12R)
*1	8-759-549-15	s	IC SN74LV245APWR
IC1707*2	6-703-188-01	s	IC S-80827CNNB-B8MT2G
*1	8-759-542-87	s	IC S-80827ANUP-EDQ-T2
IC1708	8-759-497-38	s	IC LTC1458CG-E2
IC1712*2	8-759-196-93	s	IC TC7SH00FU-TE85R
IC1713*2	8-759-642-22	s	IC UPC29M05T-E2
IC1732*2	8-759-523-97	s	IC TC74VHC123AFT(EL)
IC1800	8-759-523-02	s	IC TC74HC4053AFT(EL)
IC1801	8-759-422-21	s	IC NJM4580VTE2
IC1802	8-759-422-21	s	IC NJM4580VTE2
IC1803*2	8-759-453-97	s	IC TC7SET08FU-TE85R
*1	8-759-485-79	s	IC TC7SET08FU (TE85L)
IC1804*2	8-759-453-97	s	IC TC7SET08FU-TE85R
*1	8-759-485-79	s	IC TC7SET08FU (TE85L)
L1700	1-416-345-11	s	COIL, CHOKE 22UH
Q100	8-729-162-45	s	TRANSISTOR 2SB624-BV5
Q101 *2	8-729-928-27	s	TRANSISTOR DTA144EE
*1	8-729-140-63	s	TRANSISTOR 2SA1611-M5M6
Q102	8-729-162-45	s	TRANSISTOR 2SB624-BV5
Q103	8-729-012-35	s	TRANSISTOR 2SK711-BL
Q104 *2	8-729-928-72	s	TRANSISTOR DTA114TE
Q105	8-729-928-81	s	TRANSISTOR DTC144EE
Q200	8-729-162-45	s	TRANSISTOR 2SB624-BV5
Q201 *2	8-729-928-27	s	TRANSISTOR DTA144EE
*1	8-729-140-63	s	TRANSISTOR 2SA1611-M5M6
Q202	8-729-162-45	s	TRANSISTOR 2SB624-BV5
Q203	8-729-012-35	s	TRANSISTOR 2SK711-BL

(APR-52 BOARD for RECORDER)

Ref. No. or Q'ty	Part No.	SP	Description
Q204 *2	8-729-928-72	s	TRANSISTOR DTA114TE
Q205	8-729-928-81	s	TRANSISTOR DTC144EE
Q300	8-729-162-45	s	TRANSISTOR 2SB624-BV5
Q301 *2	8-729-928-27	s	TRANSISTOR DTA144EE
*1	8-729-140-63	s	TRANSISTOR 2SA1611-M5M6
Q302	8-729-162-45	s	TRANSISTOR 2SB624-BV5
Q303	8-729-012-35	s	TRANSISTOR 2SK711-BL
Q304 *2	8-729-928-72	s	TRANSISTOR DTA114TE
Q305	8-729-928-81	s	TRANSISTOR DTC144EE
Q400	8-729-162-45	s	TRANSISTOR 2SB624-BV5
Q401 *2	8-729-928-27	s	TRANSISTOR DTA144EE
*1	8-729-140-63	s	TRANSISTOR 2SA1611-M5M6
Q402	8-729-162-45	s	TRANSISTOR 2SB624-BV5
Q403	8-729-012-35	s	TRANSISTOR 2SK711-BL
Q404 *2	8-729-928-72	s	TRANSISTOR DTA114TE
Q405	8-729-928-81	s	TRANSISTOR DTC144EE
Q500	8-729-012-35	s	TRANSISTOR 2SK711-BL
Q501 *2	8-729-928-27	s	TRANSISTOR DTA144EE
*1	8-729-140-63	s	TRANSISTOR 2SA1611-M5M6
Q502	8-729-159-65	s	TRANSISTOR 2SD596-DV5
Q504 *2	8-729-928-72	s	TRANSISTOR DTA114TE
Q505 *2	8-729-209-07	s	TRANSISTOR 2SC4213-B
Q600	8-729-012-35	s	TRANSISTOR 2SK711-BL
Q601 *2	8-729-928-27	s	TRANSISTOR DTA144EE
*1	8-729-140-63	s	TRANSISTOR 2SA1611-M5M6
Q602	8-729-159-65	s	TRANSISTOR 2SD596-DV5
Q604 *2	8-729-928-72	s	TRANSISTOR DTA114TE
Q605 *2	8-729-209-07	s	TRANSISTOR 2SC4213-B
Q700	8-729-012-35	s	TRANSISTOR 2SK711-BL
Q701 *2	8-729-928-27	s	TRANSISTOR DTA144EE
*1	8-729-140-63	s	TRANSISTOR 2SA1611-M5M6
Q702	8-729-159-65	s	TRANSISTOR 2SD596-DV5
Q704 *2	8-729-928-72	s	TRANSISTOR DTA114TE
Q705 *2	8-729-209-07	s	TRANSISTOR 2SC4213-B
Q800	8-729-012-35	s	TRANSISTOR 2SK711-BL
Q801 *2	8-729-928-27	s	TRANSISTOR DTA144EE
*1	8-729-140-63	s	TRANSISTOR 2SA1611-M5M6
Q802	8-729-159-65	s	TRANSISTOR 2SD596-DV5
Q804 *2	8-729-928-72	s	TRANSISTOR DTA114TE
Q805 *2	8-729-209-07	s	TRANSISTOR 2SC4213-B
Q900	8-729-012-35	s	TRANSISTOR 2SK711-BL
Q901 *2	8-729-928-27	s	TRANSISTOR DTA144EE
*1	8-729-140-63	s	TRANSISTOR 2SA1611-M5M6
Q902	8-729-159-65	s	TRANSISTOR 2SD596-DV5
Q904 *2	8-729-928-72	s	TRANSISTOR DTA114TE
Q905 *2	8-729-209-07	s	TRANSISTOR 2SC4213-B
Q1000	8-729-012-35	s	TRANSISTOR 2SK711-BL
Q1001 *2	8-729-928-27	s	TRANSISTOR DTA144EE
*1	8-729-140-63	s	TRANSISTOR 2SA1611-M5M6
Q1002	8-729-159-65	s	TRANSISTOR 2SD596-DV5
Q1004 *2	8-729-928-72	s	TRANSISTOR DTA114TE
Q1005 *2	deleted		
*1	8-729-209-07	s	TRANSISTOR 2SC4213-B
Q1400 *2	8-729-928-81	s	TRANSISTOR DTC144EE
*1	8-729-029-14	s	TRANSISTOR DTC144EUA-T106
Q1700 *2	8-729-928-54	s	TRANSISTOR DTA123JE
*1	8-729-028-81	s	TRANSISTOR DTA123JUA-T106
Q1701 *2	8-729-929-08	s	TRANSISTOR DTC123JE
*1	8-729-029-04	s	TRANSISTOR DTC123JUA-T106
Q1702 *2	8-729-929-08	s	TRANSISTOR DTC123JE
*1	8-729-029-04	s	TRANSISTOR DTC123JUA-T106

(APR-52 BOARD for RECORDER)

Ref. No. or Q'ty	Part No.	SP	Description
Q1703 *2	8-729-929-08	s	TRANSISTOR DTC123JE
*1	8-729-029-04	s	TRANSISTOR DTC123JUA-T106
Q1705 *2	8-729-928-27	s	TRANSISTOR DTA144EE
*1	8-729-028-81	s	TRANSISTOR DTA123JUA-T106
Q1706 *2	deleted		
*1	8-729-028-81	s	TRANSISTOR DTA123JUA-T106
Q1707 *2	8-729-928-81	s	TRANSISTOR DTC144EE
Q1800 *2	8-729-021-09	s	TRANSISTOR RN4904(TE85R)
*1	8-729-029-14	s	TRANSISTOR DTC144EUA-T106
Q1801 *2	8-729-021-09	s	TRANSISTOR RN4904(TE85R)
*1	8-729-029-14	s	TRANSISTOR DTC144EUA-T106
Q1802 *2	8-729-928-27	s	TRANSISTOR DTA144EE
*1	8-729-028-91	s	TRANSISTOR DTA144EUA-T106
Q1803 *2	8-729-928-27	s	TRANSISTOR DTA144EE
*1	8-729-028-91	s	TRANSISTOR DTA144EUA-T106
Q1804	8-729-012-35	s	TRANSISTOR 2SK711-BL
Q1805	8-729-012-35	s	TRANSISTOR 2SK711-BL
R100	1-218-704-11	s	RESISTOR,CHIP 3.3K 1/16W(1608)
R101	1-218-700-11	s	RESISTOR,CHIP 2.2K 1/16W(1608)
R102 *2	1-218-724-11	s	RESISTOR,CHIP 22K 1/16W(1608)
*1	1-219-218-11	s	RESISTOR, METAL FILM CHIP 24K
R103 *2	1-218-724-11	s	RESISTOR,CHIP 22K 1/16W(1608)
*1	1-219-218-11	s	RESISTOR, METAL FILM CHIP 24K
R104 *2	1-245-682-11	s	RESISTOR,METAL FILM 10K (1608)
*1	1-218-367-11	s	RESISTOR,METAL FILM CHIP 10K
R105 *2	1-245-682-11	s	RESISTOR,METAL FILM 10K (1608)
*1	1-218-367-11	s	RESISTOR,METAL FILM CHIP 10K
R106	1-218-704-11	s	RESISTOR,CHIP 3.3K 1/16W(1608)
R107	1-218-684-11	s	RESISTOR,CHIP 470 1/16W (1608)
R108	1-218-712-11	s	RESISTOR,METAL 6.8K 1/16W
R109	1-216-853-11	s	RESISTOR,CHIP 470K 1/16W(1608)
R110	1-218-716-11	s	RESISTOR,CHIP 10K 1/16W(1608)
R111	1-218-692-11	s	RESISTOR,CHIP 1.0K 1/16W(1608)
R112	1-218-668-11	s	RESISTOR,CHIP 100 1/16W (1608)
R113	1-218-652-11	s	RESISTOR,CHIP 22 1/10W (1608)
R114	1-218-702-11	s	RESISTOR CHIP 2.7K 1/16W(1608)
R115	1-218-684-11	s	RESISTOR,CHIP 470 1/16W (1608)
R116	1-218-726-11	s	RESISTOR CHIP 27K 1/16W (1608)
R117	1-218-726-11	s	RESISTOR CHIP 27K 1/16W (1608)
R118	1-218-726-11	s	RESISTOR CHIP 27K 1/16W (1608)
R119	1-218-726-11	s	RESISTOR CHIP 27K 1/16W (1608)
R120	1-218-708-11	s	RESISTOR,CHIP 4.7K 1/16W(1608)
R121	1-218-718-11	s	RESISTOR CHIP 12K 1/16W (1608)
R122	1-218-718-11	s	RESISTOR CHIP 12K 1/16W (1608)
R123	1-216-857-11	s	RESISTOR,CHIP 1M 1/10W(1608)
R124	1-216-857-11	s	RESISTOR,CHIP 1M 1/10W(1608)
R125	1-218-718-11	s	RESISTOR CHIP 12K 1/16W (1608)
R126	1-218-718-11	s	RESISTOR CHIP 12K 1/16W (1608)
R127 *2	1-245-681-11	s	RESISTOR,METAL FILM 4.7K(1608)
*1	1-211-998-11	s	RESISTOR, METAL FILM CHIP 4.7K
R128 *2	1-245-681-11	s	RESISTOR,METAL FILM 4.7K(1608)
*1	1-211-998-11	s	RESISTOR, METAL FILM CHIP 4.7K
R129 *2	1-245-681-11	s	RESISTOR,METAL FILM 4.7K(1608)
*1	1-211-998-11	s	RESISTOR, METAL FILM CHIP 4.7K
R130 *2	1-245-681-11	s	RESISTOR,METAL FILM 4.7K(1608)
*1	1-211-998-11	s	RESISTOR, METAL FILM CHIP 4.7K
R131 *2	1-245-680-11	s	RESISTOR,METAL FILM 2.7K(1608)
*1	1-220-636-11	s	RESISTOR,METAL FILM CHIP 2.7K
R132	1-218-686-11	s	RESISTOR CHIP 560 1/16W (1608)
R133 *2	1-218-684-11	s	RESISTOR,CHIP 470 1/16W (1608)
*1	1-218-700-11	s	RESISTOR,CHIP 2.2K 1/16W(1608)
R134 *2	1-218-712-11	s	RESISTOR,METAL 6.8K 1/16W
*1	1-218-709-11	s	RESISTOR,CHIP 5.1K 1/16W

(APR-52 BOARD for RECORDER)

Ref. No. or Q'ty	Part No.	SP	Description
R135 *2	1-245-680-11	s	RESISTOR,METAL FILM 2.7K(1608)
*1	1-220-636-11	s	RESISTOR,METAL FILM CHIP 2.7K
R136	1-218-704-11	s	RESISTOR,CHIP 3.3K 1/16W(1608)
R137	1-218-682-11	s	RESISTOR,CHIP 390 1/16W (1608)
R138	1-218-692-11	s	RESISTOR,CHIP 1.0K 1/16W(1608)
R139	1-218-692-11	s	RESISTOR,CHIP 1.0K 1/16W(1608)
R140	1-218-716-11	s	RESISTOR,CHIP 10K 1/16W(1608)
R141	1-218-668-11	s	RESISTOR,CHIP 100 1/16W (1608)
R142	1-218-716-11	s	RESISTOR,CHIP 10K 1/16W(1608)
R143	1-218-716-11	s	RESISTOR,CHIP 10K 1/16W(1608)
R144	1-218-738-11	s	RESISTOR,CHIP 82K 1/16W(1608)
R145	1-218-692-11	s	RESISTOR,CHIP 1.0K 1/16W(1608)
R146	1-218-692-11	s	RESISTOR,CHIP 1.0K 1/16W(1608)
R147	1-218-682-11	s	RESISTOR,CHIP 390 1/16W (1608)
R148 *2	1-218-752-11	s	RESISTOR,CHIP 330K 1/16W(1608)
*1	1-218-692-11	s	RESISTOR,CHIP 1.0K 1/16W(1608)
R149 *2	1-218-752-11	s	RESISTOR,CHIP 330K 1/16W(1608)
*1	1-218-706-11	s	RESISTOR,CHIP 3.9K 1/16W(1608)
R150	1-218-716-11	s	RESISTOR,CHIP 10K 1/16W(1608)
R151 *2	1-218-736-11	s	RESISTOR,CHIP 68K 1/16W(1608)
*1	1-218-724-11	s	RESISTOR,CHIP 22K 1/16W(1608)
R152 *2	deleted		
*1	1-218-738-11	s	RESISTOR,CHIP 82K 1/16W(1608)
R153	1-218-696-11	s	RESISTOR,CHIP 1.5K 1/16W(1608)
R154	1-218-700-11	s	RESISTOR,CHIP 2.2K 1/16W(1608)
R158	1-218-716-11	s	RESISTOR,CHIP 10K 1/16W(1608)
R159	1-218-692-11	s	RESISTOR,CHIP 1.0K 1/16W(1608)
R160	1-218-700-11	s	RESISTOR,CHIP 2.2K 1/16W(1608)
R161	1-216-857-11	s	RESISTOR,CHIP 1M 1/10W(1608)
R162	1-218-708-11	s	RESISTOR,CHIP 4.7K 1/16W(1608)
R164	1-218-690-11	s	RESISTOR,CHIP 820 1/16W (1608)
R165	1-218-690-11	s	RESISTOR,CHIP 820 1/16W (1608)
R166	1-218-708-11	s	RESISTOR,CHIP 4.7K 1/16W(1608)
R167	1-218-662-11	s	RESISTOR,CHIP 56 1/16W (1608)
R168	1-218-704-11	s	RESISTOR,CHIP 3.3K 1/16W(1608)
R169	1-218-684-11	s	RESISTOR,CHIP 470 1/16W (1608)
R170	1-218-696-11	s	RESISTOR,CHIP 1.5K 1/16W(1608)
R172	1-218-692-11	s	RESISTOR,CHIP 1.0K 1/16W(1608)
R173	1-218-692-11	s	RESISTOR,CHIP 1.0K 1/16W(1608)
R174	1-218-662-11	s	RESISTOR,CHIP 56 1/16W (1608)
R175	1-218-662-11	s	RESISTOR,CHIP 56 1/16W (1608)
R176	1-218-716-11	s	RESISTOR,CHIP 10K 1/16W(1608)
R177	1-218-716-11	s	RESISTOR,CHIP 10K 1/16W(1608)
R178	1-218-732-11	s	RESISTOR,CHIP 47K 1/16W(1608)
R179	1-218-732-11	s	RESISTOR,CHIP 47K 1/16W(1608)
R180	1-218-716-11	s	RESISTOR,CHIP 10K 1/16W(1608)
R181	1-216-864-11	s	CONDUCTOR, CHIP (1608)
R182	1-216-864-11	s	CONDUCTOR, CHIP (1608)
R184	1-218-668-11	s	RESISTOR,CHIP 100 1/16W (1608)
R185	1-218-713-11	s	RESISTOR,METAL 7.5K 1/16W
R186	1-218-713-11	s	RESISTOR,METAL 7.5K 1/16W
R187	1-218-656-11	s	RESISTOR,CHIP 33 1/16W (1608)
R188 *2	1-245-679-11	s	RESISTOR,METAL FILM 100 (1608)
*1	1-219-710-11	s	RESISTOR, METAL CHIP 100 1/16W
R189	1-218-692-11	s	RESISTOR,CHIP 1.0K 1/16W(1608)
R190	1-218-752-11	s	RESISTOR,CHIP 330K 1/16W(1608)
R192 *2	1-245-679-11	s	RESISTOR,METAL FILM 100 (1608)
*1	1-219-710-11	s	RESISTOR, METAL CHIP 100 1/16W
R193	1-218-716-11	s	RESISTOR,CHIP 10K 1/16W(1608)
R195	1-218-716-11	s	RESISTOR,CHIP 10K 1/16W(1608)

(APR-52 BOARD for RECORDER)

Ref. No. or Q'ty	Part No.	SP	Description
R200	1-218-704-11	s	RESISTOR,CHIP 3.3K 1/16W(1608)
R201	1-218-700-11	s	RESISTOR,CHIP 2.2K 1/16W(1608)
R202 *2	1-218-724-11	s	RESISTOR,CHIP 22K 1/16W(1608)
*1	1-219-218-11	s	RESISTOR, METAL FILM CHIP 24K
R203 *2	1-218-724-11	s	RESISTOR,CHIP 22K 1/16W(1608)
*1	1-219-218-11	s	RESISTOR, METAL FILM CHIP 24K
R204 *2	1-245-682-11	s	RESISTOR,METAL FILM 10K (1608)
*1	1-218-367-11	s	RESISTOR,METAL FILM CHIP 10K
R205 *2	1-245-682-11	s	RESISTOR,METAL FILM 10K (1608)
*1	1-218-367-11	s	RESISTOR,METAL FILM CHIP 10K
R206	1-218-704-11	s	RESISTOR,CHIP 3.3K 1/16W(1608)
R207	1-218-684-11	s	RESISTOR,CHIP 470 1/16W (1608)
R208	1-218-712-11	s	RESISTOR,METAL 6.8K 1/16W
R209	1-216-853-11	s	RESISTOR,CHIP 470K 1/16W(1608)
R210	1-218-716-11	s	RESISTOR,CHIP 10K 1/16W(1608)
R211	1-218-692-11	s	RESISTOR,CHIP 1.0K 1/16W(1608)
R212	1-218-668-11	s	RESISTOR,CHIP 100 1/16W (1608)
R213	1-218-652-11	s	RESISTOR,CHIP 22 1/10W (1608)
R214	1-218-702-11	s	RESISTOR CHIP 2.7K 1/16W(1608)
R215	1-218-684-11	s	RESISTOR,CHIP 470 1/16W (1608)
R216	1-218-708-11	s	RESISTOR,CHIP 4.7K 1/16W(1608)
R217	1-216-857-11	s	RESISTOR,CHIP 1M 1/10W(1608)
R218	1-216-857-11	s	RESISTOR,CHIP 1M 1/10W(1608)
R219 *2	1-245-681-11	s	RESISTOR,METAL FILM 4.7K(1608)
*1	1-211-998-11	s	RESISTOR, METAL FILM CHIP 4.7K
R220 *2	1-245-681-11	s	RESISTOR,METAL FILM 4.7K(1608)
*1	1-211-998-11	s	RESISTOR, METAL FILM CHIP 4.7K
R221 *2	1-245-681-11	s	RESISTOR,METAL FILM 4.7K(1608)
*1	1-211-998-11	s	RESISTOR, METAL FILM CHIP 4.7K
R222 *2	1-245-681-11	s	RESISTOR,METAL FILM 4.7K(1608)
*1	1-211-998-11	s	RESISTOR, METAL FILM CHIP 4.7K
R223 *2	1-245-680-11	s	RESISTOR,METAL FILM 2.7K(1608)
*1	1-220-636-11	s	RESISTOR,METAL FILM CHIP 2.7K
R224	1-218-686-11	s	RESISTOR CHIP 560 1/16W (1608)
R225 *2	1-218-684-11	s	RESISTOR,CHIP 470 1/16W (1608)
*1	1-218-700-11	s	RESISTOR,CHIP 2.2K 1/16W(1608)
R226 *2	1-218-712-11	s	RESISTOR,METAL 6.8K 1/16W
*1	1-218-709-11	s	RESISTOR,CHIP 5.1K 1/16W
R227 *2	1-245-680-11	s	RESISTOR,METAL FILM 2.7K(1608)
*1	1-220-636-11	s	RESISTOR,METAL FILM CHIP 2.7K
R228	1-218-704-11	s	RESISTOR,CHIP 3.3K 1/16W(1608)
R229	1-218-682-11	s	RESISTOR,CHIP 390 1/16W (1608)
R230	1-218-692-11	s	RESISTOR,CHIP 1.0K 1/16W(1608)
R231	1-218-692-11	s	RESISTOR,CHIP 1.0K 1/16W(1608)
R232	1-218-716-11	s	RESISTOR,CHIP 10K 1/16W(1608)
R233	1-218-668-11	s	RESISTOR,CHIP 100 1/16W (1608)
R234	1-218-708-11	s	RESISTOR,CHIP 4.7K 1/16W(1608)
R235	1-218-716-11	s	RESISTOR,CHIP 10K 1/16W(1608)
R236	1-218-738-11	s	RESISTOR,CHIP 82K 1/16W(1608)
R237	1-218-692-11	s	RESISTOR,CHIP 1.0K 1/16W(1608)
R238	1-218-692-11	s	RESISTOR,CHIP 1.0K 1/16W(1608)
R240 *2	1-218-752-11	s	RESISTOR,CHIP 330K 1/16W(1608)
*1	1-218-692-11	s	RESISTOR,CHIP 1.0K 1/16W(1608)
R241 *2	1-218-752-11	s	RESISTOR,CHIP 330K 1/16W(1608)
*1	1-218-706-11	s	RESISTOR,CHIP 3.9K 1/16W(1608)
R242	1-218-716-11	s	RESISTOR,CHIP 10K 1/16W(1608)
R243 *2	1-218-736-11	s	RESISTOR,CHIP 68K 1/16W(1608)
*1	1-218-724-11	s	RESISTOR,CHIP 22K 1/16W(1608)
R244 *2	deleted		
*1	1-218-738-11	s	RESISTOR,CHIP 82K 1/16W(1608)
R245	1-218-696-11	s	RESISTOR,CHIP 1.5K 1/16W(1608)

(APR-52 BOARD for RECORDER)

Ref. No. or Q'ty	Part No.	SP	Description
R246	1-218-682-11	s	RESISTOR,CHIP 390 1/16W (1608)
R247	1-218-700-11	s	RESISTOR,CHIP 2.2K 1/16W(1608)
R249	1-218-716-11	s	RESISTOR,CHIP 10K 1/16W(1608)
R250	1-218-716-11	s	RESISTOR,CHIP 10K 1/16W(1608)
R251	1-218-692-11	s	RESISTOR,CHIP 1.0K 1/16W(1608)
R252	1-218-700-11	s	RESISTOR,CHIP 2.2K 1/16W(1608)
R253	1-216-857-11	s	RESISTOR,CHIP 1M 1/10W(1608)
R255	1-218-690-11	s	RESISTOR,CHIP 820 1/16W (1608)
R256	1-218-690-11	s	RESISTOR,CHIP 820 1/16W (1608)
R258	1-218-704-11	s	RESISTOR,CHIP 3.3K 1/16W(1608)
R259	1-218-684-11	s	RESISTOR,CHIP 470 1/16W (1608)
R260	1-218-696-11	s	RESISTOR,CHIP 1.5K 1/16W(1608)
R261	1-218-662-11	s	RESISTOR,CHIP 56 1/16W (1608)
R262	1-218-708-11	s	RESISTOR,CHIP 4.7K 1/16W(1608)
R264	1-218-692-11	s	RESISTOR,CHIP 1.0K 1/16W(1608)
R265	1-218-692-11	s	RESISTOR,CHIP 1.0K 1/16W(1608)
R266	1-218-662-11	s	RESISTOR,CHIP 56 1/16W (1608)
R267	1-218-662-11	s	RESISTOR,CHIP 56 1/16W (1608)
R268	1-218-716-11	s	RESISTOR,CHIP 10K 1/16W(1608)
R269	1-218-716-11	s	RESISTOR,CHIP 10K 1/16W(1608)
R270	1-218-732-11	s	RESISTOR,CHIP 47K 1/16W(1608)
R271	1-218-732-11	s	RESISTOR,CHIP 47K 1/16W(1608)
R284	1-218-668-11	s	RESISTOR,CHIP 100 1/16W (1608)
R285	1-218-713-11	s	RESISTOR,METAL 7.5K 1/16W
R286	1-218-713-11	s	RESISTOR,METAL 7.5K 1/16W
R287	1-218-656-11	s	RESISTOR,CHIP 33 1/16W (1608)
R288 *2	1-245-679-11	s	RESISTOR,METAL FILM 100 (1608)
*1	1-219-710-11	s	RESISTOR, METAL CHIP 100 1/16W
R289	1-218-692-11	s	RESISTOR,CHIP 1.0K 1/16W(1608)
R290	1-218-752-11	s	RESISTOR,CHIP 330K 1/16W(1608)
R292 *2	1-245-679-11	s	RESISTOR,METAL FILM 100 (1608)
*1	1-219-710-11	s	RESISTOR, METAL CHIP 100 1/16W
R293	1-218-716-11	s	RESISTOR,CHIP 10K 1/16W(1608)
R295	1-218-716-11	s	RESISTOR,CHIP 10K 1/16W(1608)
R300	1-218-704-11	s	RESISTOR,CHIP 3.3K 1/16W(1608)
R301	1-218-700-11	s	RESISTOR,CHIP 2.2K 1/16W(1608)
R302 *2	1-218-724-11	s	RESISTOR,CHIP 22K 1/16W(1608)
*1	1-219-218-11	s	RESISTOR, METAL FILM CHIP 24K
R303 *2	1-218-724-11	s	RESISTOR,CHIP 22K 1/16W(1608)
*1	1-219-218-11	s	RESISTOR, METAL FILM CHIP 24K
R304 *2	1-245-682-11	s	RESISTOR,METAL FILM 10K (1608)
*1	1-218-367-11	s	RESISTOR,METAL FILM CHIP 10K
R305 *2	1-245-682-11	s	RESISTOR,METAL FILM 10K (1608)
*1	1-218-367-11	s	RESISTOR,METAL FILM CHIP 10K
R306	1-218-704-11	s	RESISTOR,CHIP 3.3K 1/16W(1608)
R307	1-218-684-11	s	RESISTOR,CHIP 470 1/16W (1608)
R308	1-218-712-11	s	RESISTOR,METAL 6.8K 1/16W
R309	1-216-853-11	s	RESISTOR,CHIP 470K 1/16W(1608)
R310	1-218-716-11	s	RESISTOR,CHIP 10K 1/16W(1608)
R311	1-218-692-11	s	RESISTOR,CHIP 1.0K 1/16W(1608)
R312	1-218-668-11	s	RESISTOR,CHIP 100 1/16W (1608)
R313	1-218-652-11	s	RESISTOR,CHIP 22 1/10W (1608)
R314	1-218-702-11	s	RESISTOR CHIP 2.7K 1/16W(1608)
R315	1-218-684-11	s	RESISTOR,CHIP 470 1/16W (1608)
R316	1-218-726-11	s	RESISTOR CHIP 27K 1/16W (1608)
R317	1-218-726-11	s	RESISTOR CHIP 27K 1/16W (1608)
R318	1-218-726-11	s	RESISTOR CHIP 27K 1/16W (1608)
R319	1-218-726-11	s	RESISTOR CHIP 27K 1/16W (1608)
R320	1-218-708-11	s	RESISTOR,CHIP 4.7K 1/16W(1608)
R321	1-218-718-11	s	RESISTOR CHIP 12K 1/16W (1608)

(APR-52 BOARD for RECORDER)

Ref. No. or Q'ty	Part No.	SP	Description
R322	1-218-718-11	s	RESISTOR CHIP 12K 1/16W (1608)
R323	1-216-857-11	s	RESISTOR,CHIP 1M 1/10W(1608)
R324	1-216-857-11	s	RESISTOR,CHIP 1M 1/10W(1608)
R325	1-218-718-11	s	RESISTOR CHIP 12K 1/16W (1608)
R326	1-218-718-11	s	RESISTOR CHIP 12K 1/16W (1608)
R327 *2	1-245-681-11	s	RESISTOR,METAL FILM 4.7K(1608)
*1	1-211-998-11	s	RESISTOR, METAL FILM CHIP 4.7K
R328 *2	1-245-681-11	s	RESISTOR,METAL FILM 4.7K(1608)
*1	1-211-998-11	s	RESISTOR, METAL FILM CHIP 4.7K
R329 *2	1-245-681-11	s	RESISTOR,METAL FILM 4.7K(1608)
*1	1-211-998-11	s	RESISTOR, METAL FILM CHIP 4.7K
R330 *2	1-245-681-11	s	RESISTOR,METAL FILM 4.7K(1608)
*1	1-211-998-11	s	RESISTOR, METAL FILM CHIP 4.7K
R331 *2	1-245-680-11	s	RESISTOR,METAL FILM 2.7K(1608)
*1	1-220-636-11	s	RESISTOR,METAL FILM CHIP 2.7K
R332	1-218-686-11	s	RESISTOR CHIP 560 1/16W (1608)
R333 *2	1-218-684-11	s	RESISTOR,CHIP 470 1/16W (1608)
*1	1-218-700-11	s	RESISTOR,CHIP 2.2K 1/16W(1608)
R334 *2	1-218-712-11	s	RESISTOR,METAL 6.8K 1/16W
*1	1-218-709-11	s	RESISTOR,CHIP 5.1K 1/16W
R335 *2	1-245-680-11	s	RESISTOR,METAL FILM 2.7K(1608)
*1	1-220-636-11	s	RESISTOR,METAL FILM CHIP 2.7K
R336	1-218-704-11	s	RESISTOR,CHIP 3.3K 1/16W(1608)
R337	1-218-682-11	s	RESISTOR,CHIP 390 1/16W (1608)
R338	1-218-692-11	s	RESISTOR,CHIP 1.0K 1/16W(1608)
R339	1-218-692-11	s	RESISTOR,CHIP 1.0K 1/16W(1608)
R340	1-218-716-11	s	RESISTOR,CHIP 10K 1/16W(1608)
R341	1-218-668-11	s	RESISTOR,CHIP 100 1/16W (1608)
R342	1-218-708-11	s	RESISTOR,CHIP 4.7K 1/16W(1608)
R343	1-218-716-11	s	RESISTOR,CHIP 10K 1/16W(1608)
R344	1-218-738-11	s	RESISTOR,CHIP 82K 1/16W(1608)
R345	1-218-692-11	s	RESISTOR,CHIP 1.0K 1/16W(1608)
R346	1-218-692-11	s	RESISTOR,CHIP 1.0K 1/16W(1608)
R347	1-218-716-11	s	RESISTOR,CHIP 10K 1/16W(1608)
R348 *2	1-218-752-11	s	RESISTOR,CHIP 330K 1/16W(1608)
*1	1-218-692-11	s	RESISTOR,CHIP 1.0K 1/16W(1608)
R349 *2	1-218-752-11	s	RESISTOR,CHIP 330K 1/16W(1608)
*1	1-218-706-11	s	RESISTOR,CHIP 3.9K 1/16W(1608)
R350	1-218-716-11	s	RESISTOR,CHIP 10K 1/16W(1608)
R351 *2	1-218-736-11	s	RESISTOR,CHIP 68K 1/16W(1608)
*1	1-218-724-11	s	RESISTOR,CHIP 22K 1/16W(1608)
R352 *2	deleted		
*1	1-218-738-11	s	RESISTOR,CHIP 82K 1/16W(1608)
R354	1-218-700-11	s	RESISTOR,CHIP 2.2K 1/16W(1608)
R355	1-218-682-11	s	RESISTOR,CHIP 390 1/16W (1608)
R358	1-218-716-11	s	RESISTOR,CHIP 10K 1/16W(1608)
R359	1-218-692-11	s	RESISTOR,CHIP 1.0K 1/16W(1608)
R360	1-218-700-11	s	RESISTOR,CHIP 2.2K 1/16W(1608)
R361	1-216-857-11	s	RESISTOR,CHIP 1M 1/10W(1608)
R362	1-218-696-11	s	RESISTOR,CHIP 1.5K 1/16W(1608)
R364	1-218-690-11	s	RESISTOR,CHIP 820 1/16W (1608)
R365	1-218-690-11	s	RESISTOR,CHIP 820 1/16W (1608)
R366	1-218-708-11	s	RESISTOR,CHIP 4.7K 1/16W(1608)
R367	1-218-662-11	s	RESISTOR,CHIP 56 1/16W (1608)
R368	1-218-704-11	s	RESISTOR,CHIP 3.3K 1/16W(1608)
R369	1-218-684-11	s	RESISTOR,CHIP 470 1/16W (1608)
R370	1-218-696-11	s	RESISTOR,CHIP 1.5K 1/16W(1608)
R372	1-218-692-11	s	RESISTOR,CHIP 1.0K 1/16W(1608)
R373	1-218-692-11	s	RESISTOR,CHIP 1.0K 1/16W(1608)
R374	1-218-662-11	s	RESISTOR,CHIP 56 1/16W (1608)
R375	1-218-662-11	s	RESISTOR,CHIP 56 1/16W (1608)

(APR-52 BOARD for RECORDER)

Ref. No. or Q'ty	Part No.	SP	Description
R376	1-218-716-11	s	RESISTOR,CHIP 10K 1/16W(1608)
R377	1-218-716-11	s	RESISTOR,CHIP 10K 1/16W(1608)
R378	1-218-732-11	s	RESISTOR,CHIP 47K 1/16W(1608)
R379	1-218-732-11	s	RESISTOR,CHIP 47K 1/16W(1608)
R380	1-218-716-11	s	RESISTOR,CHIP 10K 1/16W(1608)
R381	1-216-864-11	s	CONDUCTOR, CHIP (1608)
R382	1-216-864-11	s	CONDUCTOR, CHIP (1608)
R384	1-218-668-11	s	RESISTOR,CHIP 100 1/16W (1608)
R385	1-218-713-11	s	RESISTOR,METAL 7.5K 1/16W
R386 *2	1-245-679-11	s	RESISTOR,METAL FILM 100 (1608)
*1	1-219-710-11	s	RESISTOR, METAL CHIP 100 1/16W
R387	1-218-713-11	s	RESISTOR,METAL 7.5K 1/16W
R388	1-218-656-11	s	RESISTOR,CHIP 33 1/16W (1608)
R389	1-218-692-11	s	RESISTOR,CHIP 1.0K 1/16W(1608)
R390	1-218-752-11	s	RESISTOR,CHIP 330K 1/16W(1608)
R392 *2	1-245-679-11	s	RESISTOR,METAL FILM 100 (1608)
*1	1-219-710-11	s	RESISTOR, METAL CHIP 100 1/16W
R393	1-218-716-11	s	RESISTOR,CHIP 10K 1/16W(1608)
R395	1-218-716-11	s	RESISTOR,CHIP 10K 1/16W(1608)
R400	1-218-704-11	s	RESISTOR,CHIP 3.3K 1/16W(1608)
R401	1-218-700-11	s	RESISTOR,CHIP 2.2K 1/16W(1608)
R402 *2	1-218-724-11	s	RESISTOR,CHIP 22K 1/16W(1608)
*1	1-219-218-11	s	RESISTOR, METAL FILM CHIP 24K
R403 *2	1-218-724-11	s	RESISTOR,CHIP 22K 1/16W(1608)
*1	1-219-218-11	s	RESISTOR, METAL FILM CHIP 24K
R404 *2	1-245-682-11	s	RESISTOR,METAL FILM 10K (1608)
*1	1-218-367-11	s	RESISTOR,METAL FILM CHIP 10K
R405 *2	1-245-682-11	s	RESISTOR,METAL FILM 10K (1608)
*1	1-218-367-11	s	RESISTOR,METAL FILM CHIP 10K
R406	1-218-704-11	s	RESISTOR,CHIP 3.3K 1/16W(1608)
R407	1-218-684-11	s	RESISTOR,CHIP 470 1/16W (1608)
R408	1-218-712-11	s	RESISTOR,METAL 6.8K 1/16W
R409	1-216-853-11	s	RESISTOR,CHIP 470K 1/16W(1608)
R410	1-218-716-11	s	RESISTOR,CHIP 10K 1/16W(1608)
R411	1-218-692-11	s	RESISTOR,CHIP 1.0K 1/16W(1608)
R412	1-218-668-11	s	RESISTOR,CHIP 100 1/16W (1608)
R413	1-218-652-11	s	RESISTOR,CHIP 22 1/10W (1608)
R414	1-218-702-11	s	RESISTOR CHIP 2.7K 1/16W(1608)
R415	1-218-684-11	s	RESISTOR,CHIP 470 1/16W (1608)
R416	1-218-708-11	s	RESISTOR,CHIP 4.7K 1/16W(1608)
R417	1-216-857-11	s	RESISTOR,CHIP 1M 1/10W(1608)
R418	1-216-857-11	s	RESISTOR,CHIP 1M 1/10W(1608)
R419 *2	1-245-681-11	s	RESISTOR,METAL FILM 4.7K(1608)
*1	1-211-998-11	s	RESISTOR, METAL FILM CHIP 4.7K
R420 *2	1-245-681-11	s	RESISTOR,METAL FILM 4.7K(1608)
*1	1-211-998-11	s	RESISTOR, METAL FILM CHIP 4.7K
R421 *2	1-245-681-11	s	RESISTOR,METAL FILM 4.7K(1608)
*1	1-211-998-11	s	RESISTOR, METAL FILM CHIP 4.7K
R422 *2	1-245-681-11	s	RESISTOR,METAL FILM 4.7K(1608)
*1	1-211-998-11	s	RESISTOR, METAL FILM CHIP 4.7K
R423 *2	1-245-680-11	s	RESISTOR,METAL FILM 2.7K(1608)
*1	1-220-636-11	s	RESISTOR,METAL FILM CHIP 2.7K
R424	1-218-686-11	s	RESISTOR CHIP 560 1/16W (1608)
R425 *2	1-218-684-11	s	RESISTOR,CHIP 470 1/16W (1608)
*1	1-218-700-11	s	RESISTOR,CHIP 2.2K 1/16W(1608)
R426 *2	1-218-712-11	s	RESISTOR,METAL 6.8K 1/16W
*1	1-218-709-11	s	RESISTOR,CHIP 5.1K 1/16W
R427 *2	1-245-680-11	s	RESISTOR,METAL FILM 2.7K(1608)
*1	1-220-636-11	s	RESISTOR,METAL FILM CHIP 2.7K
R428	1-218-704-11	s	RESISTOR,CHIP 3.3K 1/16W(1608)
R429	1-218-682-11	s	RESISTOR,CHIP 390 1/16W (1608)

(APR-52 BOARD for RECORDER)

Ref. No. or Q'ty	Part No.	SP	Description
R430	1-218-692-11	s	RESISTOR,CHIP 1.0K 1/16W(1608)
R431	1-218-692-11	s	RESISTOR,CHIP 1.0K 1/16W(1608)
R432	1-218-716-11	s	RESISTOR,CHIP 10K 1/16W(1608)
R433	1-218-668-11	s	RESISTOR,CHIP 100 1/16W (1608)
R434	1-218-708-11	s	RESISTOR,CHIP 4.7K 1/16W(1608)
R435	1-218-696-11	s	RESISTOR,CHIP 1.5K 1/16W(1608)
R436	1-218-738-11	s	RESISTOR,CHIP 82K 1/16W(1608)
R437	1-218-692-11	s	RESISTOR,CHIP 1.0K 1/16W(1608)
R438	1-218-692-11	s	RESISTOR,CHIP 1.0K 1/16W(1608)
R440 *2	1-218-752-11	s	RESISTOR,CHIP 330K 1/16W(1608)
*1	1-218-692-11	s	RESISTOR,CHIP 1.0K 1/16W(1608)
R441 *2	1-218-752-11	s	RESISTOR,CHIP 330K 1/16W(1608)
*1	1-218-706-11	s	RESISTOR,CHIP 3.9K 1/16W(1608)
R442	1-218-716-11	s	RESISTOR,CHIP 10K 1/16W(1608)
R443 *2	1-218-736-11	s	RESISTOR,CHIP 68K 1/16W(1608)
*1	1-218-724-11	s	RESISTOR,CHIP 22K 1/16W(1608)
R444 *2	deleted		
*1	1-218-738-11	s	RESISTOR,CHIP 82K 1/16W(1608)
R445	1-218-716-11	s	RESISTOR,CHIP 10K 1/16W(1608)
R446	1-218-682-11	s	RESISTOR,CHIP 390 1/16W (1608)
R447	1-218-700-11	s	RESISTOR,CHIP 2.2K 1/16W(1608)
R450	1-218-716-11	s	RESISTOR,CHIP 10K 1/16W(1608)
R451	1-218-692-11	s	RESISTOR,CHIP 1.0K 1/16W(1608)
R452	1-218-700-11	s	RESISTOR,CHIP 2.2K 1/16W(1608)
R453	1-216-857-11	s	RESISTOR,CHIP 1M 1/10W(1608)
R454	1-218-716-11	s	RESISTOR,CHIP 10K 1/16W(1608)
R455	1-218-690-11	s	RESISTOR,CHIP 820 1/16W (1608)
R456	1-218-690-11	s	RESISTOR,CHIP 820 1/16W (1608)
R458	1-218-704-11	s	RESISTOR,CHIP 3.3K 1/16W(1608)
R459	1-218-684-11	s	RESISTOR,CHIP 470 1/16W (1608)
R460	1-218-696-11	s	RESISTOR,CHIP 1.5K 1/16W(1608)
R461	1-218-662-11	s	RESISTOR,CHIP 56 1/16W (1608)
R462	1-218-708-11	s	RESISTOR,CHIP 4.7K 1/16W(1608)
R464	1-218-692-11	s	RESISTOR,CHIP 1.0K 1/16W(1608)
R465	1-218-692-11	s	RESISTOR,CHIP 1.0K 1/16W(1608)
R466	1-218-662-11	s	RESISTOR,CHIP 56 1/16W (1608)
R467	1-218-662-11	s	RESISTOR,CHIP 56 1/16W (1608)
R468	1-218-716-11	s	RESISTOR,CHIP 10K 1/16W(1608)
R469	1-218-716-11	s	RESISTOR,CHIP 10K 1/16W(1608)
R470	1-218-732-11	s	RESISTOR,CHIP 47K 1/16W(1608)
R471	1-218-732-11	s	RESISTOR,CHIP 47K 1/16W(1608)
R484	1-218-668-11	s	RESISTOR,CHIP 100 1/16W (1608)
R485	1-218-713-11	s	RESISTOR,METAL 7.5K 1/16W
R486 *2	1-245-679-11	s	RESISTOR,METAL FILM 100 (1608)
*1	1-219-710-11	s	RESISTOR, METAL CHIP 100 1/16W
R487	1-218-713-11	s	RESISTOR,METAL 7.5K 1/16W
R488	1-218-656-11	s	RESISTOR,CHIP 33 1/16W (1608)
R489	1-218-692-11	s	RESISTOR,CHIP 1.0K 1/16W(1608)
R490	1-218-752-11	s	RESISTOR,CHIP 330K 1/16W(1608)
R492 *2	1-245-679-11	s	RESISTOR,METAL FILM 100 (1608)
*1	1-219-710-11	s	RESISTOR, METAL CHIP 100 1/16W
R493	1-218-716-11	s	RESISTOR,CHIP 10K 1/16W(1608)
R495	1-218-716-11	s	RESISTOR,CHIP 10K 1/16W(1608)
R500	1-218-652-11	s	RESISTOR,CHIP 22 1/10W (1608)
R501	1-218-660-91	s	RESISTOR,CHIP 47 1/16W (1608)
R502	1-218-692-11	s	RESISTOR,CHIP 1.0K 1/16W(1608)
R503	1-218-692-11	s	RESISTOR,CHIP 1.0K 1/16W(1608)
R504	1-218-668-11	s	RESISTOR,CHIP 100 1/16W (1608)
R505	1-216-864-11	s	CONDUCTOR, CHIP (1608)
R506	1-216-864-11	s	CONDUCTOR, CHIP (1608)

(APR-52 BOARD for RECORDER)

Ref. No. or Q'ty	Part No.	SP	Description
R510 *2	1-218-700-11	s	RESISTOR,CHIP 2.2K 1/16W(1608)
*1	1-216-659-11	s	RESISTOR,CHIP 2.2K 1/10W(2012)
R511 *2	1-218-700-11	s	RESISTOR,CHIP 2.2K 1/16W(1608)
*1	1-216-659-11	s	RESISTOR,CHIP 2.2K 1/10W(2012)
R513 *2	1-216-864-11	s	CONDUCTOR, CHIP (1608)
R514 *2	1-218-680-11	s	RESISTOR,CHIP 330 1/16W(1608)
R515	1-218-708-11	s	RESISTOR,CHIP 4.7K 1/16W(1608)
R516 *2	1-218-720-11	s	RESISTOR,CHIP 15K 1/16W(1608)
R520	1-218-644-11	s	RESISTOR,CHIP 10 1/16W
R521	1-216-864-11	s	CONDUCTOR, CHIP (1608)
R525	1-218-699-11	s	RESISTOR,CHIP 2.0K 1/16W(1608)
R526	1-218-699-11	s	RESISTOR,CHIP 2.0K 1/16W(1608)
R527	1-218-708-11	s	RESISTOR,CHIP 4.7K 1/16W(1608)
R528	1-218-708-11	s	RESISTOR,CHIP 4.7K 1/16W(1608)
R531	1-218-692-11	s	RESISTOR,CHIP 1.0K 1/16W(1608)
R532 *2	deleted		
*1	1-218-738-11	s	RESISTOR,CHIP 82K 1/16W(1608)
R533	1-218-700-11	s	RESISTOR,CHIP 2.2K 1/16W(1608)
R534	1-216-857-11	s	RESISTOR,CHIP 1M 1/10W(1608)
R535	1-218-713-11	s	RESISTOR,METAL 7.5K 1/16W
R536	1-218-713-11	s	RESISTOR,METAL 7.5K 1/16W
R537	1-218-712-11	s	RESISTOR,METAL 6.8K 1/16W
R538	1-218-702-11	s	RESISTOR CHIP 2.7K 1/16W(1608)
R539	1-218-718-11	s	RESISTOR CHIP 12K 1/16W (1608)
R540	1-216-863-11	s	RESISTOR,CHIP 3.3M 1/16W 1608
R541 *2	1-218-688-11	s	RESISTOR,CHIP 680 1/16W(1608)
*1	1-218-692-11	s	RESISTOR,CHIP 1.0K 1/16W(1608)
R542	1-218-692-11	s	RESISTOR,CHIP 1.0K 1/16W(1608)
R543 *2	1-218-752-11	s	RESISTOR,CHIP 330K 1/16W(1608)
*1	1-218-724-11	s	RESISTOR,CHIP 22K 1/16W(1608)
R544 *2	1-218-752-11	s	RESISTOR,CHIP 330K 1/16W(1608)
*1	1-218-692-11	s	RESISTOR,CHIP 1.0K 1/16W(1608)
R545 *2	1-218-736-11	s	RESISTOR,CHIP 68K 1/16W(1608)
*1	1-218-706-11	s	RESISTOR,CHIP 3.9K 1/16W(1608)
R547	1-218-720-11	s	RESISTOR,CHIP 15K 1/16W(1608)
R548	1-218-722-11	s	RESISTOR, CHIP 18K 1/16W 1608
R549	1-218-716-11	s	RESISTOR,CHIP 10K 1/16W(1608)
R550	1-218-714-11	s	RESISTOR,CHIP 8.2K 1/16W(1608)
R551	1-218-692-11	s	RESISTOR,CHIP 1.0K 1/16W(1608)
R553	1-218-688-11	s	RESISTOR,CHIP 680 1/16W(1608)
R554	1-218-698-11	s	RESISTOR,CHIP 1.8K 1/16W(1608)
R555	1-218-672-11	s	RESISTOR,CHIP 150 1/16W(1608)
R556	1-218-674-11	s	RESISTOR CHIP 180 1/16W (1608)
R557 *2	1-245-682-11	s	RESISTOR,METAL FILM 10K (1608)
*1	1-218-367-11	s	RESISTOR,METAL FILM CHIP 10K
R558 *2	1-245-682-11	s	RESISTOR,METAL FILM 10K (1608)
*1	1-218-367-11	s	RESISTOR,METAL FILM CHIP 10K
R559 *2	1-245-681-11	s	RESISTOR,METAL FILM 4.7K(1608)
*1	1-211-998-11	s	RESISTOR, METAL FILM CHIP 4.7K
R560 *2	1-245-681-11	s	RESISTOR,METAL FILM 4.7K(1608)
*1	1-211-998-11	s	RESISTOR, METAL FILM CHIP 4.7K
R561 *2	1-245-682-11	s	RESISTOR,METAL FILM 10K (1608)
*1	1-218-367-11	s	RESISTOR,METAL FILM CHIP 10K
R562 *2	1-245-681-11	s	RESISTOR,METAL FILM 4.7K(1608)
*1	1-211-998-11	s	RESISTOR, METAL FILM CHIP 4.7K
R563	1-218-692-11	s	RESISTOR,CHIP 1.0K 1/16W(1608)
R564	1-218-740-11	s	RESISTOR,CHIP 100K 1/16W(1608)
R565 *2	1-245-681-11	s	RESISTOR,METAL FILM 4.7K(1608)
*1	1-211-998-11	s	RESISTOR, METAL FILM CHIP 4.7K
R566	1-218-740-11	s	RESISTOR,CHIP 100K 1/16W(1608)
R567 *2	1-245-682-11	s	RESISTOR,METAL FILM 10K (1608)
*1	1-218-367-11	s	RESISTOR,METAL FILM CHIP 10K

(APR-52 BOARD for RECORDER)

Ref. No. or Q'ty	Part No.	SP	Description
R568	1-245-682-11	s	RESISTOR,METAL FILM 10K (1608)
*1	1-218-367-11	s	RESISTOR,METAL FILM CHIP 10K
R569 *2	1-245-682-11	s	RESISTOR,METAL FILM 10K (1608)
*1	1-218-367-11	s	RESISTOR,METAL FILM CHIP 10K
R570	1-218-692-11	s	RESISTOR,CHIP 1.0K 1/16W(1608)
R571	1-218-660-91	s	RESISTOR,CHIP 47 1/16W (1608)
R572	1-218-740-11	s	RESISTOR,CHIP 100K 1/16W(1608)
R573	1-218-660-91	s	RESISTOR,CHIP 47 1/16W (1608)
R574	1-218-740-11	s	RESISTOR,CHIP 100K 1/16W(1608)
R575	1-218-716-11	s	RESISTOR,CHIP 10K 1/16W(1608)
R576	1-218-716-11	s	RESISTOR,CHIP 10K 1/16W(1608)
R577	1-218-716-11	s	RESISTOR,CHIP 10K 1/16W(1608)
R578	1-218-716-11	s	RESISTOR,CHIP 10K 1/16W(1608)
R580	1-219-493-11	s	RESISTOR, METAL FILM CHIP 22
R583	1-219-493-11	s	RESISTOR, METAL FILM CHIP 22
R585	1-218-680-11	s	RESISTOR,CHIP 330 1/16W(1608)
R586	1-218-700-11	s	RESISTOR,CHIP 2.2K 1/16W(1608)
R587	1-218-722-11	s	RESISTOR, CHIP 18K 1/16W 1608
R588	1-218-692-11	s	RESISTOR,CHIP 1.0K 1/16W(1608)
R593	1-219-493-11	s	RESISTOR, METAL FILM CHIP 22
R594	1-219-493-11	s	RESISTOR, METAL FILM CHIP 22
R601	1-218-660-91	s	RESISTOR,CHIP 47 1/16W (1608)
R602	1-218-692-11	s	RESISTOR,CHIP 1.0K 1/16W(1608)
R603	1-218-692-11	s	RESISTOR,CHIP 1.0K 1/16W(1608)
R605	1-216-864-11	s	CONDUCTOR, CHIP (1608)
R606	1-216-864-11	s	CONDUCTOR, CHIP (1608)
R610 *2	1-218-700-11	s	RESISTOR,CHIP 2.2K 1/16W(1608)
*1	1-216-659-11	s	RESISTOR,CHIP 2.2K 1/10W(2012)
R611 *2	1-218-700-11	s	RESISTOR,CHIP 2.2K 1/16W(1608)
*1	1-216-659-11	s	RESISTOR,CHIP 2.2K 1/10W(2012)
R613 *2	1-216-864-11	s	CONDUCTOR, CHIP (1608)
R614 *2	1-218-680-11	s	RESISTOR,CHIP 330 1/16W(1608)
R616 *2	1-218-720-11	s	RESISTOR,CHIP 15K 1/16W(1608)
R620	1-218-644-11	s	RESISTOR,CHIP 10 1/16W
R621	1-216-864-11	s	CONDUCTOR, CHIP (1608)
R625	1-218-699-11	s	RESISTOR,CHIP 2.0K 1/16W(1608)
R626	1-218-699-11	s	RESISTOR,CHIP 2.0K 1/16W(1608)
R627	1-218-708-11	s	RESISTOR,CHIP 4.7K 1/16W(1608)
R628	1-218-708-11	s	RESISTOR,CHIP 4.7K 1/16W(1608)
R631	1-218-692-11	s	RESISTOR,CHIP 1.0K 1/16W(1608)
R632 *2	deleted		
*1	1-218-738-11	s	RESISTOR,CHIP 82K 1/16W(1608)
R633	1-218-700-11	s	RESISTOR,CHIP 2.2K 1/16W(1608)
R634	1-216-857-11	s	RESISTOR,CHIP 1M 1/10W(1608)
R635	1-218-713-11	s	RESISTOR,METAL 7.5K 1/16W
R636	1-218-713-11	s	RESISTOR,METAL 7.5K 1/16W
R637	1-218-712-11	s	RESISTOR,METAL 6.8K 1/16W
R638	1-218-702-11	s	RESISTOR CHIP 2.7K 1/16W(1608)
R639	1-218-718-11	s	RESISTOR CHIP 12K 1/16W (1608)
R640	1-216-863-11	s	RESISTOR,CHIP 3.3M 1/16W 1608
R641 *2	1-218-688-11	s	RESISTOR,CHIP 680 1/16W(1608)
*1	1-218-692-11	s	RESISTOR,CHIP 1.0K 1/16W(1608)
R642	1-218-692-11	s	RESISTOR,CHIP 1.0K 1/16W(1608)
R643 *2	1-218-752-11	s	RESISTOR,CHIP 330K 1/16W(1608)
*1	1-218-724-11	s	RESISTOR,CHIP 22K 1/16W(1608)
R644 *2	1-218-752-11	s	RESISTOR,CHIP 330K 1/16W(1608)
*1	1-218-692-11	s	RESISTOR,CHIP 1.0K 1/16W(1608)
R645 *2	1-218-736-11	s	RESISTOR,CHIP 68K 1/16W(1608)
*1	1-218-706-11	s	RESISTOR,CHIP 3.9K 1/16W(1608)
R647	1-218-720-11	s	RESISTOR,CHIP 15K 1/16W(1608)

(APR-52 BOARD for RECORDER)

Ref. No. or Q'ty	Part No.	SP	Description
R648	1-218-722-11	s	RESISTOR, CHIP 18K 1/16W 1608
R649	1-218-716-11	s	RESISTOR,CHIP 10K 1/16W(1608)
R650	1-218-714-11	s	RESISTOR,CHIP 8.2K 1/16W(1608)
R651	1-218-692-11	s	RESISTOR,CHIP 1.0K 1/16W(1608)
R653	1-218-688-11	s	RESISTOR,CHIP 680 1/16W(1608)
R654	1-218-698-11	s	RESISTOR,CHIP 1.8K 1/16W(1608)
R655	1-218-672-11	s	RESISTOR,CHIP 150 1/16W(1608)
R656	1-218-674-11	s	RESISTOR CHIP 180 1/16W (1608)
R657 *2	1-245-682-11	s	RESISTOR,METAL FILM 10K (1608)
*1	1-218-367-11	s	RESISTOR,METAL FILM CHIP 10K
R658 *2	1-245-682-11	s	RESISTOR,METAL FILM 10K (1608)
*1	1-218-367-11	s	RESISTOR,METAL FILM CHIP 10K
R659 *2	1-245-681-11	s	RESISTOR,METAL FILM 4.7K(1608)
*1	1-211-998-11	s	RESISTOR, METAL FILM CHIP 4.7K
R660 *2	1-245-681-11	s	RESISTOR,METAL FILM 4.7K(1608)
*1	1-211-998-11	s	RESISTOR, METAL FILM CHIP 4.7K
R661 *2	1-245-682-11	s	RESISTOR,METAL FILM 10K (1608)
*1	1-218-367-11	s	RESISTOR,METAL FILM CHIP 10K
R662 *2	1-245-681-11	s	RESISTOR,METAL FILM 4.7K(1608)
*1	1-211-998-11	s	RESISTOR, METAL FILM CHIP 4.7K
R663	1-218-692-11	s	RESISTOR,CHIP 1.0K 1/16W(1608)
R664	1-218-740-11	s	RESISTOR,CHIP 100K 1/16W(1608)
R665 *2	1-245-681-11	s	RESISTOR,METAL FILM 4.7K(1608)
*1	1-211-998-11	s	RESISTOR, METAL FILM CHIP 4.7K
R666	1-218-740-11	s	RESISTOR,CHIP 100K 1/16W(1608)
R667 *2	1-245-682-11	s	RESISTOR,METAL FILM 10K (1608)
*1	1-218-367-11	s	RESISTOR,METAL FILM CHIP 10K
R668 *2	1-245-682-11	s	RESISTOR,METAL FILM 10K (1608)
*1	1-218-367-11	s	RESISTOR,METAL FILM CHIP 10K
R669 *2	1-245-682-11	s	RESISTOR,METAL FILM 10K (1608)
*1	1-218-367-11	s	RESISTOR,METAL FILM CHIP 10K
R670	1-218-692-11	s	RESISTOR,CHIP 1.0K 1/16W(1608)
R671	1-218-660-91	s	RESISTOR,CHIP 47 1/16W (1608)
R672	1-218-740-11	s	RESISTOR,CHIP 100K 1/16W(1608)
R673	1-218-660-91	s	RESISTOR,CHIP 47 1/16W (1608)
R674	1-218-740-11	s	RESISTOR,CHIP 100K 1/16W(1608)
R675	1-218-716-11	s	RESISTOR,CHIP 10K 1/16W(1608)
R676	1-218-716-11	s	RESISTOR,CHIP 10K 1/16W(1608)
R677	1-218-716-11	s	RESISTOR,CHIP 10K 1/16W(1608)
R678	1-218-716-11	s	RESISTOR,CHIP 10K 1/16W(1608)
R680	1-219-493-11	s	RESISTOR, METAL FILM CHIP 22
R683	1-219-493-11	s	RESISTOR, METAL FILM CHIP 22
R685	1-218-680-11	s	RESISTOR,CHIP 330 1/16W(1608)
R686	1-218-700-11	s	RESISTOR,CHIP 2.2K 1/16W(1608)
R687	1-218-722-11	s	RESISTOR, CHIP 18K 1/16W 1608
R688	1-218-692-11	s	RESISTOR,CHIP 1.0K 1/16W(1608)
R693	1-219-493-11	s	RESISTOR, METAL FILM CHIP 22
R694	1-219-493-11	s	RESISTOR, METAL FILM CHIP 22
R700	1-218-652-11	s	RESISTOR,CHIP 22 1/10W (1608)
R701	1-218-692-11	s	RESISTOR,CHIP 1.0K 1/16W(1608)
R702	1-218-660-91	s	RESISTOR,CHIP 47 1/16W (1608)
R703	1-218-692-11	s	RESISTOR,CHIP 1.0K 1/16W(1608)
R704	1-218-668-11	s	RESISTOR,CHIP 100 1/16W (1608)
R705	1-216-864-11	s	CONDUCTOR, CHIP (1608)
R706	1-216-864-11	s	CONDUCTOR, CHIP (1608)
R710 *2	1-218-700-11	s	RESISTOR,CHIP 2.2K 1/16W(1608)
*1	1-216-659-11	s	RESISTOR,CHIP 2.2K 1/10W(2012)
R711 *2	1-218-700-11	s	RESISTOR,CHIP 2.2K 1/16W(1608)
*1	1-216-659-11	s	RESISTOR,CHIP 2.2K 1/10W(2012)
R713 *2	1-216-864-11	s	CONDUCTOR, CHIP (1608)
R714 *2	1-218-680-11	s	RESISTOR,CHIP 330 1/16W(1608)

(APR-52 BOARD for RECORDER)

Ref. No. or Q'ty	Part No.	SP	Description
R715	1-218-708-11	s	RESISTOR,CHIP 4.7K 1/16W(1608)
R716 *2	1-218-720-11	s	RESISTOR,CHIP 15K 1/16W(1608)
R720	1-218-644-11	s	RESISTOR,CHIP 10 1/16W
R721	1-216-864-11	s	CONDUCTOR, CHIP (1608)
R725	1-218-699-11	s	RESISTOR,CHIP 2.0K 1/16W(1608)
R726	1-218-699-11	s	RESISTOR,CHIP 2.0K 1/16W(1608)
R727	1-218-708-11	s	RESISTOR,CHIP 4.7K 1/16W(1608)
R728	1-218-708-11	s	RESISTOR,CHIP 4.7K 1/16W(1608)
R731	1-218-692-11	s	RESISTOR,CHIP 1.0K 1/16W(1608)
R732 *2	deleted		
*1	1-218-738-11	s	RESISTOR,CHIP 82K 1/16W(1608)
R733	1-218-700-11	s	RESISTOR,CHIP 2.2K 1/16W(1608)
R734	1-216-857-11	s	RESISTOR,CHIP 1M 1/10W(1608)
R735	1-218-713-11	s	RESISTOR,METAL 7.5K 1/16W
R736	1-218-713-11	s	RESISTOR,METAL 7.5K 1/16W
R737	1-218-712-11	s	RESISTOR,METAL 6.8K 1/16W
R738	1-218-702-11	s	RESISTOR CHIP 2.7K 1/16W(1608)
R739	1-218-718-11	s	RESISTOR CHIP 12K 1/16W (1608)
R740	1-216-863-11	s	RESISTOR,CHIP 3.3M 1/16W 1608
R741 *2	1-218-688-11	s	RESISTOR,CHIP 680 1/16W(1608)
*1	1-218-692-11	s	RESISTOR,CHIP 1.0K 1/16W(1608)
R742	1-218-692-11	s	RESISTOR,CHIP 1.0K 1/16W(1608)
R743 *2	1-218-752-11	s	RESISTOR,CHIP 330K 1/16W(1608)
*1	1-218-724-11	s	RESISTOR,CHIP 22K 1/16W(1608)
R744 *2	1-218-752-11	s	RESISTOR,CHIP 330K 1/16W(1608)
*1	1-218-692-11	s	RESISTOR,CHIP 1.0K 1/16W(1608)
R745 *2	1-218-736-11	s	RESISTOR,CHIP 68K 1/16W(1608)
*1	1-218-706-11	s	RESISTOR,CHIP 3.9K 1/16W(1608)
R747	1-218-720-11	s	RESISTOR,CHIP 15K 1/16W(1608)
R748	1-218-722-11	s	RESISTOR, CHIP 18K 1/16W 1608
R749	1-218-716-11	s	RESISTOR,CHIP 10K 1/16W(1608)
R750	1-218-714-11	s	RESISTOR,CHIP 8.2K 1/16W(1608)
R751	1-218-692-11	s	RESISTOR,CHIP 1.0K 1/16W(1608)
R753	1-218-688-11	s	RESISTOR,CHIP 680 1/16W(1608)
R754	1-218-698-11	s	RESISTOR,CHIP 1.8K 1/16W(1608)
R755	1-218-672-11	s	RESISTOR,CHIP 150 1/16W(1608)
R756	1-218-674-11	s	RESISTOR CHIP 180 1/16W (1608)
R757 *2	1-245-682-11	s	RESISTOR,METAL FILM 10K (1608)
*1	1-218-367-11	s	RESISTOR,METAL FILM CHIP 10K
R758 *2	1-245-682-11	s	RESISTOR,METAL FILM 10K (1608)
*1	1-218-367-11	s	RESISTOR,METAL FILM CHIP 10K
R759 *2	1-245-681-11	s	RESISTOR,METAL FILM 4.7K(1608)
*1	1-211-998-11	s	RESISTOR, METAL FILM CHIP 4.7K
R760 *2	1-245-681-11	s	RESISTOR,METAL FILM 4.7K(1608)
*1	1-211-998-11	s	RESISTOR, METAL FILM CHIP 4.7K
R761 *2	1-245-682-11	s	RESISTOR,METAL FILM 10K (1608)
*1	1-218-367-11	s	RESISTOR,METAL FILM CHIP 10K
R762 *2	1-245-681-11	s	RESISTOR,METAL FILM 4.7K(1608)
*1	1-211-998-11	s	RESISTOR, METAL FILM CHIP 4.7K
R763 *2	1-245-681-11	s	RESISTOR,METAL FILM 4.7K(1608)
*1	1-211-998-11	s	RESISTOR, METAL FILM CHIP 4.7K
R764	1-218-692-11	s	RESISTOR,CHIP 1.0K 1/16W(1608)
R765	1-218-740-11	s	RESISTOR,CHIP 100K 1/16W(1608)
R766 *2	1-245-682-11	s	RESISTOR,METAL FILM 10K (1608)
*1	1-218-367-11	s	RESISTOR,METAL FILM CHIP 10K
R767 *2	1-245-682-11	s	RESISTOR,METAL FILM 10K (1608)
*1	1-218-367-11	s	RESISTOR,METAL FILM CHIP 10K
R768 *2	1-245-682-11	s	RESISTOR,METAL FILM 10K (1608)
*1	1-218-367-11	s	RESISTOR,METAL FILM CHIP 10K
R769	1-218-740-11	s	RESISTOR,CHIP 100K 1/16W(1608)
R770	1-218-660-91	s	RESISTOR,CHIP 47 1/16W (1608)

(APR-52 BOARD for RECORDER)

Ref. No. or Q'ty	Part No.	SP	Description
R771	1-218-660-91	s	RESISTOR,CHIP 47 1/16W (1608)
R772	1-218-692-11	s	RESISTOR,CHIP 1.0K 1/16W(1608)
R773	1-218-740-11	s	RESISTOR,CHIP 100K 1/16W(1608)
R774	1-218-740-11	s	RESISTOR,CHIP 100K 1/16W(1608)
R776	1-219-493-11	s	RESISTOR, METAL FILM CHIP 22
R778	1-218-716-11	s	RESISTOR,CHIP 10K 1/16W(1608)
R779	1-218-716-11	s	RESISTOR,CHIP 10K 1/16W(1608)
R780	1-218-716-11	s	RESISTOR,CHIP 10K 1/16W(1608)
R782	1-219-493-11	s	RESISTOR, METAL FILM CHIP 22
R784	1-218-716-11	s	RESISTOR,CHIP 10K 1/16W(1608)
R785	1-218-680-11	s	RESISTOR,CHIP 330 1/16W(1608)
R786	1-218-700-11	s	RESISTOR,CHIP 2.2K 1/16W(1608)
R787	1-218-722-11	s	RESISTOR, CHIP 18K 1/16W 1608
R788	1-218-692-11	s	RESISTOR,CHIP 1.0K 1/16W(1608)
R794	1-219-493-11	s	RESISTOR, METAL FILM CHIP 22
R795	1-219-493-11	s	RESISTOR, METAL FILM CHIP 22
R801	1-218-692-11	s	RESISTOR,CHIP 1.0K 1/16W(1608)
R803	1-218-692-11	s	RESISTOR,CHIP 1.0K 1/16W(1608)
R805	1-216-864-11	s	CONDUCTOR, CHIP (1608)
R806	1-216-864-11	s	CONDUCTOR, CHIP (1608)
R810 *2	1-218-700-11	s	RESISTOR,CHIP 2.2K 1/16W(1608)
*1	1-216-659-11	s	RESISTOR,CHIP 2.2K 1/10W(2012)
R811 *2	1-218-700-11	s	RESISTOR,CHIP 2.2K 1/16W(1608)
*1	1-216-659-11	s	RESISTOR,CHIP 2.2K 1/10W(2012)
R813 *2	1-216-864-11	s	CONDUCTOR, CHIP (1608)
R814 *2	1-218-680-11	s	RESISTOR,CHIP 330 1/16W(1608)
R816 *2	1-218-720-11	s	RESISTOR,CHIP 15K 1/16W(1608)
R820	1-218-644-11	s	RESISTOR,CHIP 10 1/16W
R821	1-216-864-11	s	CONDUCTOR, CHIP (1608)
R825	1-218-699-11	s	RESISTOR,CHIP 2.0K 1/16W(1608)
R826	1-218-699-11	s	RESISTOR,CHIP 2.0K 1/16W(1608)
R827	1-218-708-11	s	RESISTOR,CHIP 4.7K 1/16W(1608)
R828	1-218-708-11	s	RESISTOR,CHIP 4.7K 1/16W(1608)
R831	1-218-692-11	s	RESISTOR,CHIP 1.0K 1/16W(1608)
R832 *2	deleted		
*1	1-218-738-11	s	RESISTOR,CHIP 82K 1/16W(1608)
R833	1-218-700-11	s	RESISTOR,CHIP 2.2K 1/16W(1608)
R834	1-216-857-11	s	RESISTOR,CHIP 1M 1/10W(1608)
R835	1-218-713-11	s	RESISTOR,METAL 7.5K 1/16W
R836	1-218-713-11	s	RESISTOR,METAL 7.5K 1/16W
R837	1-218-712-11	s	RESISTOR,METAL 6.8K 1/16W
R838	1-218-702-11	s	RESISTOR CHIP 2.7K 1/16W(1608)
R839	1-218-718-11	s	RESISTOR CHIP 12K 1/16W (1608)
R840	1-216-863-11	s	RESISTOR,CHIP 3.3M 1/16W 1608
R841 *2	1-218-688-11	s	RESISTOR,CHIP 680 1/16W(1608)
*1	1-218-692-11	s	RESISTOR,CHIP 1.0K 1/16W(1608)
R842	1-218-692-11	s	RESISTOR,CHIP 1.0K 1/16W(1608)
R843 *2	1-218-752-11	s	RESISTOR,CHIP 330K 1/16W(1608)
*1	1-218-724-11	s	RESISTOR,CHIP 22K 1/16W(1608)
R844 *2	1-218-752-11	s	RESISTOR,CHIP 330K 1/16W(1608)
*1	1-218-692-11	s	RESISTOR,CHIP 1.0K 1/16W(1608)
R845 *2	1-218-736-11	s	RESISTOR,CHIP 68K 1/16W(1608)
*1	1-218-706-11	s	RESISTOR,CHIP 3.9K 1/16W(1608)
R847	1-218-720-11	s	RESISTOR,CHIP 15K 1/16W(1608)
R848	1-218-722-11	s	RESISTOR, CHIP 18K 1/16W 1608
R849	1-218-716-11	s	RESISTOR,CHIP 10K 1/16W(1608)
R850	1-218-714-11	s	RESISTOR,CHIP 8.2K 1/16W(1608)
R851	1-218-692-11	s	RESISTOR,CHIP 1.0K 1/16W(1608)
R853	1-218-688-11	s	RESISTOR,CHIP 680 1/16W(1608)
R854	1-218-698-11	s	RESISTOR,CHIP 1.8K 1/16W(1608)

(APR-52 BOARD for RECORDER)

Ref. No. or Q'ty	Part No.	SP	Description
R855	1-218-672-11	s	RESISTOR,CHIP 150 1/16W(1608)
R856	1-218-674-11	s	RESISTOR CHIP 180 1/16W (1608)
R857 *2	1-245-682-11	s	RESISTOR,METAL FILM 10K (1608)
*1	1-218-367-11	s	RESISTOR,METAL FILM CHIP 10K
R858 *2	1-245-682-11	s	RESISTOR,METAL FILM 10K (1608)
*1	1-218-367-11	s	RESISTOR,METAL FILM CHIP 10K
R859 *2	1-245-681-11	s	RESISTOR,METAL FILM 4.7K(1608)
*1	1-211-998-11	s	RESISTOR, METAL FILM CHIP 4.7K
R860 *2	1-245-681-11	s	RESISTOR,METAL FILM 4.7K(1608)
*1	1-211-998-11	s	RESISTOR, METAL FILM CHIP 4.7K
R861 *2	1-245-682-11	s	RESISTOR,METAL FILM 10K (1608)
*1	1-218-367-11	s	RESISTOR,METAL FILM CHIP 10K
R862 *2	1-245-681-11	s	RESISTOR,METAL FILM 4.7K(1608)
*1	1-211-998-11	s	RESISTOR, METAL FILM CHIP 4.7K
R863 *2	1-245-681-11	s	RESISTOR,METAL FILM 4.7K(1608)
*1	1-211-998-11	s	RESISTOR, METAL FILM CHIP 4.7K
R864	1-218-692-11	s	RESISTOR,CHIP 1.0K 1/16W(1608)
R865	1-218-740-11	s	RESISTOR,CHIP 100K 1/16W(1608)
R866 *2	1-245-682-11	s	RESISTOR,METAL FILM 10K (1608)
*1	1-218-367-11	s	RESISTOR,METAL FILM CHIP 10K
R867 *2	1-245-682-11	s	RESISTOR,METAL FILM 10K (1608)
*1	1-218-367-11	s	RESISTOR,METAL FILM CHIP 10K
R868 *2	1-245-682-11	s	RESISTOR,METAL FILM 10K (1608)
*1	1-218-367-11	s	RESISTOR,METAL FILM CHIP 10K
R869	1-218-740-11	s	RESISTOR,CHIP 100K 1/16W(1608)
R870	1-218-660-91	s	RESISTOR,CHIP 47 1/16W (1608)
R871	1-218-660-91	s	RESISTOR,CHIP 47 1/16W (1608)
R872	1-218-692-11	s	RESISTOR,CHIP 1.0K 1/16W(1608)
R873	1-218-740-11	s	RESISTOR,CHIP 100K 1/16W(1608)
R874	1-218-740-11	s	RESISTOR,CHIP 100K 1/16W(1608)
R876	1-219-493-11	s	RESISTOR, METAL FILM CHIP 22
R878	1-218-716-11	s	RESISTOR,CHIP 10K 1/16W(1608)
R879	1-218-716-11	s	RESISTOR,CHIP 10K 1/16W(1608)
R880	1-218-716-11	s	RESISTOR,CHIP 10K 1/16W(1608)
R882	1-219-493-11	s	RESISTOR, METAL FILM CHIP 22
R884	1-218-716-11	s	RESISTOR,CHIP 10K 1/16W(1608)
R885	1-218-680-11	s	RESISTOR,CHIP 330 1/16W(1608)
R886	1-218-700-11	s	RESISTOR,CHIP 2.2K 1/16W(1608)
R887	1-218-722-11	s	RESISTOR, CHIP 18K 1/16W 1608
R888	1-218-692-11	s	RESISTOR,CHIP 1.0K 1/16W(1608)
R893	1-218-660-91	s	RESISTOR,CHIP 47 1/16W (1608)
R894	1-219-493-11	s	RESISTOR, METAL FILM CHIP 22
R895	1-219-493-11	s	RESISTOR, METAL FILM CHIP 22
R900	1-218-652-11	s	RESISTOR,CHIP 22 1/10W (1608)
R903	1-218-660-91	s	RESISTOR,CHIP 47 1/16W (1608)
R904	1-218-668-11	s	RESISTOR,CHIP 100 1/16W (1608)
R906	1-218-708-11	s	RESISTOR,CHIP 4.7K 1/16W(1608)
R907	1-216-864-11	s	CONDUCTOR, CHIP (1608)
R908	1-216-864-11	s	CONDUCTOR, CHIP (1608)
R910 *2	1-218-700-11	s	RESISTOR,CHIP 2.2K 1/16W(1608)
*1	1-216-659-11	s	RESISTOR,CHIP 2.2K 1/10W(2012)
R911 *2	1-218-700-11	s	RESISTOR,CHIP 2.2K 1/16W(1608)
*1	1-216-659-11	s	RESISTOR,CHIP 2.2K 1/10W(2012)
R913 *2	1-216-864-11	s	CONDUCTOR, CHIP (1608)
R915	1-218-708-11	s	RESISTOR,CHIP 4.7K 1/16W(1608)
R916 *2	1-218-698-11	s	RESISTOR,CHIP 1.8K 1/16W(1608)
R917 *2	1-218-698-11	s	RESISTOR,CHIP 1.8K 1/16W(1608)
R918 *2	1-218-720-11	s	RESISTOR,CHIP 15K 1/16W(1608)
R919 *2	1-218-680-11	s	RESISTOR,CHIP 330 1/16W(1608)
R920	1-218-644-11	s	RESISTOR,CHIP 10 1/16W
R921	1-216-864-11	s	CONDUCTOR, CHIP (1608)

(APR-52 BOARD for RECORDER)

Ref. No. or Q'ty	Part No.	SP	Description
R925	1-218-699-11	s	RESISTOR,CHIP 2.0K 1/16W(1608)
R926	1-218-699-11	s	RESISTOR,CHIP 2.0K 1/16W(1608)
R927	1-218-708-11	s	RESISTOR,CHIP 4.7K 1/16W(1608)
R928	1-218-708-11	s	RESISTOR,CHIP 4.7K 1/16W(1608)
R931	1-218-692-11	s	RESISTOR,CHIP 1.0K 1/16W(1608)
R932 *2	1-218-738-11	s	RESISTOR,CHIP 82K 1/16W(1608)
R933	1-218-700-11	s	RESISTOR,CHIP 2.2K 1/16W(1608)
R934	1-216-857-11	s	RESISTOR,CHIP 1M 1/10W(1608)
R935	1-218-713-11	s	RESISTOR,METAL 7.5K 1/16W
R936	1-218-713-11	s	RESISTOR,METAL 7.5K 1/16W
R937	1-218-712-11	s	RESISTOR,METAL 6.8K 1/16W
R938	1-218-702-11	s	RESISTOR CHIP 2.7K 1/16W(1608)
R939	1-218-718-11	s	RESISTOR CHIP 12K 1/16W (1608)
R940	1-216-863-11	s	RESISTOR,CHIP 3.3M 1/16W 1608
R941 *2	1-218-688-11	s	RESISTOR,CHIP 680 1/16W(1608)
*1	1-218-692-11	s	RESISTOR,CHIP 1.0K 1/16W(1608)
R942	1-218-692-11	s	RESISTOR,CHIP 1.0K 1/16W(1608)
R943 *2	1-218-752-11	s	RESISTOR,CHIP 330K 1/16W(1608)
*1	1-218-724-11	s	RESISTOR,CHIP 22K 1/16W(1608)
R944 *2	1-218-752-11	s	RESISTOR,CHIP 330K 1/16W(1608)
*1	1-218-692-11	s	RESISTOR,CHIP 1.0K 1/16W(1608)
R945 *2	1-218-736-11	s	RESISTOR,CHIP 68K 1/16W(1608)
*1	1-218-706-11	s	RESISTOR,CHIP 3.9K 1/16W(1608)
R946	1-218-660-91	s	RESISTOR,CHIP 47 1/16W (1608)
R947	1-218-704-11	s	RESISTOR,CHIP 3.3K 1/16W(1608)
	1-218-709-11	s	RESISTOR,CHIP 5.1K 1/16W
R948 *2	1-218-704-11	s	RESISTOR,CHIP 3.3K 1/16W(1608)
*1	1-218-709-11	s	RESISTOR,CHIP 5.1K 1/16W
R950	1-218-708-11	s	RESISTOR,CHIP 4.7K 1/16W(1608)
R951	1-218-708-11	s	RESISTOR,CHIP 4.7K 1/16W(1608)
R952	1-218-720-11	s	RESISTOR,CHIP 15K 1/16W(1608)
R953	1-218-722-11	s	RESISTOR, CHIP 18K 1/16W 1608
R954	1-218-716-11	s	RESISTOR,CHIP 10K 1/16W(1608)
R955	1-218-714-11	s	RESISTOR,CHIP 8.2K 1/16W(1608)
R956	1-218-692-11	s	RESISTOR,CHIP 1.0K 1/16W(1608)
R958	1-218-688-11	s	RESISTOR,CHIP 680 1/16W(1608)
R959	1-218-698-11	s	RESISTOR,CHIP 1.8K 1/16W(1608)
R960	1-218-672-11	s	RESISTOR,CHIP 150 1/16W(1608)
R961	1-218-674-11	s	RESISTOR CHIP 180 1/16W (1608)
R962 *2	1-245-682-11	s	RESISTOR,METAL FILM 10K (1608)
*1	1-218-367-11	s	RESISTOR,METAL FILM CHIP 10K
R963 *2	1-245-682-11	s	RESISTOR,METAL FILM 10K (1608)
*1	1-218-367-11	s	RESISTOR,METAL FILM CHIP 10K
R964 *2	1-245-681-11	s	RESISTOR,METAL FILM 4.7K(1608)
*1	1-211-998-11	s	RESISTOR, METAL FILM CHIP 4.7K
R965 *2	1-245-681-11	s	RESISTOR,METAL FILM 4.7K(1608)
*1	1-211-998-11	s	RESISTOR, METAL FILM CHIP 4.7K
R966 *2	1-245-682-11	s	RESISTOR,METAL FILM 10K (1608)
*1	1-218-367-11	s	RESISTOR,METAL FILM CHIP 10K
R967 *2	1-245-681-11	s	RESISTOR,METAL FILM 4.7K(1608)
*1	1-211-998-11	s	RESISTOR, METAL FILM CHIP 4.7K
R968 *2	1-245-681-11	s	RESISTOR,METAL FILM 4.7K(1608)
*1	1-211-998-11	s	RESISTOR, METAL FILM CHIP 4.7K
R969	1-218-692-11	s	RESISTOR,CHIP 1.0K 1/16W(1608)
R970	1-218-740-11	s	RESISTOR,CHIP 100K 1/16W(1608)
R971 *2	1-245-682-11	s	RESISTOR,METAL FILM 10K (1608)
*1	1-218-367-11	s	RESISTOR,METAL FILM CHIP 10K
R972 *2	1-245-682-11	s	RESISTOR,METAL FILM 10K (1608)
*1	1-218-367-11	s	RESISTOR,METAL FILM CHIP 10K
R973 *2	1-245-682-11	s	RESISTOR,METAL FILM 10K (1608)
*1	1-218-367-11	s	RESISTOR,METAL FILM CHIP 10K

(APR-52 BOARD for RECORDER)

Ref. No. or Q'ty	Part No.	SP	Description
R974	1-218-740-11	s	RESISTOR,CHIP 100K 1/16W(1608)
R975	1-218-660-91	s	RESISTOR,CHIP 47 1/16W (1608)
R976	1-218-660-91	s	RESISTOR,CHIP 47 1/16W (1608)
R977	1-218-692-11	s	RESISTOR,CHIP 1.0K 1/16W(1608)
R978	1-218-740-11	s	RESISTOR,CHIP 100K 1/16W(1608)
R979	1-218-740-11	s	RESISTOR,CHIP 100K 1/16W(1608)
R981	1-219-493-11	s	RESISTOR, METAL FILM CHIP 22
R983	1-218-716-11	s	RESISTOR,CHIP 10K 1/16W(1608)
R984	1-218-716-11	s	RESISTOR,CHIP 10K 1/16W(1608)
R985	1-218-716-11	s	RESISTOR,CHIP 10K 1/16W(1608)
R987	1-219-493-11	s	RESISTOR, METAL FILM CHIP 22
R989	1-218-716-11	s	RESISTOR,CHIP 10K 1/16W(1608)
R990	1-218-680-11	s	RESISTOR,CHIP 330 1/16W(1608)
R991	1-218-700-11	s	RESISTOR,CHIP 2.2K 1/16W(1608)
R993	1-218-722-11	s	RESISTOR, CHIP 18K 1/16W 1608
R994	1-218-692-11	s	RESISTOR,CHIP 1.0K 1/16W(1608)
R995	1-219-493-11	s	RESISTOR, METAL FILM CHIP 22
R996	1-219-493-11	s	RESISTOR, METAL FILM CHIP 22
R1000	1-218-660-91	s	RESISTOR,CHIP 47 1/16W (1608)
R1003	1-218-660-91	s	RESISTOR,CHIP 47 1/16W (1608)
R1006	1-218-708-11	s	RESISTOR,CHIP 4.7K 1/16W(1608)
R1007	1-216-864-11	s	CONDUCTOR, CHIP (1608)
R1008	1-216-864-11	s	CONDUCTOR, CHIP (1608)
R1010 *2	1-218-700-11	s	RESISTOR,CHIP 2.2K 1/16W(1608)
*1	1-216-659-11	s	RESISTOR,CHIP 2.2K 1/10W(2012)
R1011 *2	1-218-700-11	s	RESISTOR,CHIP 2.2K 1/16W(1608)
*1	1-216-659-11	s	RESISTOR,CHIP 2.2K 1/10W(2012)
R1015 *2	1-216-864-11	s	CONDUCTOR, CHIP (1608)
R1016 *2	1-218-698-11	s	RESISTOR,CHIP 1.8K 1/16W(1608)
R1017 *2	1-218-698-11	s	RESISTOR,CHIP 1.8K 1/16W(1608)
R1018 *2	1-218-720-11	s	RESISTOR,CHIP 15K 1/16W(1608)
R1019 *2	1-218-680-11	s	RESISTOR,CHIP 330 1/16W(1608)
R1020	1-218-644-11	s	RESISTOR,CHIP 10 1/16W
R1021	1-216-864-11	s	CONDUCTOR, CHIP (1608)
R1025	1-218-699-11	s	RESISTOR,CHIP 2.0K 1/16W(1608)
R1026	1-218-699-11	s	RESISTOR,CHIP 2.0K 1/16W(1608)
R1027	1-218-708-11	s	RESISTOR,CHIP 4.7K 1/16W(1608)
R1028	1-218-708-11	s	RESISTOR,CHIP 4.7K 1/16W(1608)
R1031	1-218-692-11	s	RESISTOR,CHIP 1.0K 1/16W(1608)
R1032 *2	1-218-738-11	s	RESISTOR,CHIP 82K 1/16W(1608)
R1033	1-218-700-11	s	RESISTOR,CHIP 2.2K 1/16W(1608)
R1034	1-216-857-11	s	RESISTOR,CHIP 1M 1/10W(1608)
R1035	1-218-713-11	s	RESISTOR,METAL 7.5K 1/16W
R1036	1-218-713-11	s	RESISTOR,METAL 7.5K 1/16W
R1037	1-218-712-11	s	RESISTOR,METAL 6.8K 1/16W
R1038	1-218-702-11	s	RESISTOR CHIP 2.7K 1/16W(1608)
R1039	1-218-718-11	s	RESISTOR CHIP 12K 1/16W (1608)
R1040	1-216-863-11	s	RESISTOR,CHIP 3.3M 1/16W 1608
R1041 *2	1-218-688-11	s	RESISTOR,CHIP 680 1/16W(1608)
*1	1-218-692-11	s	RESISTOR,CHIP 1.0K 1/16W(1608)
R1042	1-218-692-11	s	RESISTOR,CHIP 1.0K 1/16W(1608)
R1043 *2	1-218-752-11	s	RESISTOR,CHIP 330K 1/16W(1608)
*1	1-218-724-11	s	RESISTOR,CHIP 22K 1/16W(1608)
R1044 *2	1-218-752-11	s	RESISTOR,CHIP 330K 1/16W(1608)
*1	1-218-692-11	s	RESISTOR,CHIP 1.0K 1/16W(1608)
R1045 *2	1-218-736-11	s	RESISTOR,CHIP 68K 1/16W(1608)
*1	1-218-706-11	s	RESISTOR,CHIP 3.9K 1/16W(1608)
R1047 *2	1-218-704-11	s	RESISTOR,CHIP 3.3K 1/16W(1608)
*1	1-218-709-11	s	RESISTOR,CHIP 5.1K 1/16W
R1048 *2	1-218-704-11	s	RESISTOR,CHIP 3.3K 1/16W(1608)
*1	1-218-709-11	s	RESISTOR,CHIP 5.1K 1/16W

(APR-52 BOARD for RECORDER)

Ref. No. or Q'ty	Part No.	SP	Description
R1050	1-218-708-11	s	RESISTOR,CHIP 4.7K 1/16W(1608)
R1051	1-218-708-11	s	RESISTOR,CHIP 4.7K 1/16W(1608)
R1052	1-218-720-11	s	RESISTOR,CHIP 15K 1/16W(1608)
R1053	1-218-722-11	s	RESISTOR, CHIP 18K 1/16W 1608
R1054	1-218-716-11	s	RESISTOR,CHIP 10K 1/16W(1608)
R1055	1-218-714-11	s	RESISTOR,CHIP 8.2K 1/16W(1608)
R1056	1-218-692-11	s	RESISTOR,CHIP 1.0K 1/16W(1608)
R1058	1-218-688-11	s	RESISTOR,CHIP 680 1/16W(1608)
R1059	1-218-698-11	s	RESISTOR,CHIP 1.8K 1/16W(1608)
R1060	1-218-672-11	s	RESISTOR,CHIP 150 1/16W(1608)
R1061	1-218-674-11	s	RESISTOR CHIP 180 1/16W (1608)
R1062 *2	1-245-682-11	s	RESISTOR,METAL FILM 10K (1608)
*1	1-218-367-11	s	RESISTOR,METAL FILM CHIP 10K
R1063 *2	1-245-682-11	s	RESISTOR,METAL FILM 10K (1608)
*1	1-218-367-11	s	RESISTOR,METAL FILM CHIP 10K
R1064 *2	1-245-681-11	s	RESISTOR,METAL FILM 4.7K(1608)
*1	1-211-998-11	s	RESISTOR, METAL FILM CHIP 4.7K
R1065 *2	1-245-681-11	s	RESISTOR,METAL FILM 4.7K(1608)
*1	1-211-998-11	s	RESISTOR, METAL FILM CHIP 4.7K
R1066 *2	1-245-682-11	s	RESISTOR,METAL FILM 10K (1608)
*1	1-218-367-11	s	RESISTOR,METAL FILM CHIP 10K
R1067 *2	1-245-681-11	s	RESISTOR,METAL FILM 4.7K(1608)
*1	1-211-998-11	s	RESISTOR, METAL FILM CHIP 4.7K
R1068 *2	1-245-681-11	s	RESISTOR,METAL FILM 4.7K(1608)
*1	1-211-998-11	s	RESISTOR, METAL FILM CHIP 4.7K
R1069	1-218-692-11	s	RESISTOR,CHIP 1.0K 1/16W(1608)
R1070	1-218-740-11	s	RESISTOR,CHIP 100K 1/16W(1608)
R1071 *2	1-245-682-11	s	RESISTOR,METAL FILM 10K (1608)
*1	1-218-367-11	s	RESISTOR,METAL FILM CHIP 10K
R1072 *2	1-245-682-11	s	RESISTOR,METAL FILM 10K (1608)
*1	1-218-367-11	s	RESISTOR,METAL FILM CHIP 10K
R1073 *2	1-245-682-11	s	RESISTOR,METAL FILM 10K (1608)
*1	1-218-367-11	s	RESISTOR,METAL FILM CHIP 10K
R1074	1-218-740-11	s	RESISTOR,CHIP 100K 1/16W(1608)
R1075	1-218-660-91	s	RESISTOR,CHIP 47 1/16W (1608)
R1076	1-218-660-91	s	RESISTOR,CHIP 47 1/16W (1608)
R1077	1-218-692-11	s	RESISTOR,CHIP 1.0K 1/16W(1608)
R1078	1-218-740-11	s	RESISTOR,CHIP 100K 1/16W(1608)
R1079	1-218-740-11	s	RESISTOR,CHIP 100K 1/16W(1608)
R1081	1-219-493-11	s	RESISTOR, METAL FILM CHIP 22
R1083	1-218-716-11	s	RESISTOR,CHIP 10K 1/16W(1608)
R1084	1-218-716-11	s	RESISTOR,CHIP 10K 1/16W(1608)
R1085	1-218-716-11	s	RESISTOR,CHIP 10K 1/16W(1608)
R1087	1-219-493-11	s	RESISTOR, METAL FILM CHIP 22
R1089	1-218-716-11	s	RESISTOR,CHIP 10K 1/16W(1608)
R1090	1-218-680-11	s	RESISTOR,CHIP 330 1/16W(1608)
R1091	1-218-700-11	s	RESISTOR,CHIP 2.2K 1/16W(1608)
R1093	1-218-722-11	s	RESISTOR, CHIP 18K 1/16W 1608
R1094	1-218-692-11	s	RESISTOR,CHIP 1.0K 1/16W(1608)
R1095	1-219-493-11	s	RESISTOR, METAL FILM CHIP 22
R1096	1-219-493-11	s	RESISTOR, METAL FILM CHIP 22
R1108	1-216-864-11	s	CONDUCTOR, CHIP (1608)
R1109	1-216-864-11	s	CONDUCTOR, CHIP (1608)
R1110 *2	1-216-864-11	s	CONDUCTOR, CHIP (1608)
R1111 *2	1-216-864-11	s	CONDUCTOR, CHIP (1608)
R1202	1-216-864-11	s	CONDUCTOR, CHIP (1608)
R1203	1-216-864-11	s	CONDUCTOR, CHIP (1608)
R1204	1-216-864-11	s	CONDUCTOR, CHIP (1608)
R1205	1-216-864-11	s	CONDUCTOR, CHIP (1608)
R1206	1-216-864-11	s	CONDUCTOR, CHIP (1608)

(APR-52 BOARD for RECORDER)

Ref. No. or Q'ty	Part No.	SP	Description
R1207	1-216-864-11	s	CONDUCTOR, CHIP (1608)
R1211	1-218-716-11	s	RESISTOR,CHIP 10K 1/16W(1608)
R1212	1-218-692-11	s	RESISTOR,CHIP 1.0K 1/16W(1608)
R1302 *2	deleted		
*1	1-218-716-11	s	RESISTOR,CHIP 10K 1/16W(1608)
R1400	1-216-864-11	s	CONDUCTOR, CHIP (1608)
R1401	1-216-864-11	s	CONDUCTOR, CHIP (1608)
R1402	1-216-864-11	s	CONDUCTOR, CHIP (1608)
R1403	1-216-864-11	s	CONDUCTOR, CHIP (1608)
R1405	1-216-864-11	s	CONDUCTOR, CHIP (1608)
R1406 *2	deleted		
*1	1-216-864-11	s	CONDUCTOR, CHIP (1608)
R1407 *2	1-216-864-11	s	CONDUCTOR, CHIP (1608)
R1408	1-216-864-11	s	CONDUCTOR, CHIP (1608)
R1410 *2	1-218-652-11	s	RESISTOR,CHIP 22 1/10W (1608)
R1411	1-218-716-11	s	RESISTOR,CHIP 10K 1/16W(1608)
R1412	1-216-864-11	s	CONDUCTOR, CHIP (1608)
R1413	1-216-864-11	s	CONDUCTOR, CHIP (1608)
R1501 *2	1-218-692-11	s	RESISTOR,CHIP 1.0K 1/16W(1608)
*1	1-216-864-11	s	CONDUCTOR, CHIP (1608)
R1504 *2	1-218-692-11	s	RESISTOR,CHIP 1.0K 1/16W(1608)
*1	1-216-864-11	s	CONDUCTOR, CHIP (1608)
R1505 *2	1-218-692-11	s	RESISTOR,CHIP 1.0K 1/16W(1608)
R1506 *2	deleted		
*1	1-216-864-11	s	CONDUCTOR, CHIP (1608)
R1507	1-218-652-11	s	RESISTOR,CHIP 22 1/10W (1608)
R1509	1-218-692-11	s	RESISTOR,CHIP 1.0K 1/16W(1608)
R1600	1-218-676-11	s	RESISTOR,CHIP 220 1/16W(1608)
R1601	1-218-716-11	s	RESISTOR,CHIP 10K 1/16W(1608)
R1602	1-218-716-11	s	RESISTOR,CHIP 10K 1/16W(1608)
R1603	1-218-716-11	s	RESISTOR,CHIP 10K 1/16W(1608)
R1604	1-218-716-11	s	RESISTOR,CHIP 10K 1/16W(1608)
R1605	1-218-716-11	s	RESISTOR,CHIP 10K 1/16W(1608)
R1606	1-218-676-11	s	RESISTOR,CHIP 220 1/16W(1608)
R1607	1-218-716-11	s	RESISTOR,CHIP 10K 1/16W(1608)
R1608	1-218-660-91	s	RESISTOR,CHIP 47 1/16W (1608)
R1609	1-218-660-91	s	RESISTOR,CHIP 47 1/16W (1608)
R1610 *2	deleted		
*1	1-218-752-11	s	RESISTOR,CHIP 330K 1/16W(1608)
R1611 *2	deleted		
*1	1-218-700-11	s	RESISTOR,CHIP 2.2K 1/16W(1608)
R1612 *2	1-216-864-11	s	CONDUCTOR, CHIP (1608)
R1613 *2	1-218-692-11	s	RESISTOR,CHIP 1.0K 1/16W(1608)
R1700 *2	deleted		
*1	1-218-716-11	s	RESISTOR,CHIP 10K 1/16W(1608)
R1702	1-218-740-11	s	RESISTOR,CHIP 100K 1/16W(1608)
R1703 *2	1-218-716-11	s	RESISTOR,CHIP 10K 1/16W(1608)
R1704	1-216-864-11	s	CONDUCTOR, CHIP (1608)
R1705 *2	1-218-716-11	s	RESISTOR,CHIP 10K 1/16W(1608)
R1707	1-218-752-11	s	RESISTOR,CHIP 330K 1/16W(1608)
R1708	1-218-668-11	s	RESISTOR,CHIP 100 1/16W (1608)
R1711	1-216-864-11	s	CONDUCTOR, CHIP (1608)
R1712	1-218-696-11	s	RESISTOR,CHIP 1.5K 1/16W(1608)
R1713	1-218-744-11	s	RESISTOR,CHIP 150K 1/16W
R1714	1-218-684-11	s	RESISTOR,CHIP 470 1/16W (1608)
R1715	1-218-692-11	s	RESISTOR,CHIP 1.0K 1/16W(1608)
R1716	1-218-692-11	s	RESISTOR,CHIP 1.0K 1/16W(1608)
R1717	1-218-696-11	s	RESISTOR,CHIP 1.5K 1/16W(1608)
R1718	1-218-660-91	s	RESISTOR,CHIP 47 1/16W (1608)
R1719	1-218-740-11	s	RESISTOR,CHIP 100K 1/16W(1608)

(APR-52 BOARD for RECORDER)

Ref. No. or Q'ty	Part No.	SP	Description
R1720	1-218-680-11	s	RESISTOR,CHIP 330 1/16W(1608)
R1722 *2	1-218-728-11	s	RESISTOR,CHIP 33K 1/16W
R1723 *2	1-218-752-11	s	RESISTOR,CHIP 330K 1/16W(1608)
R1724 *2	1-218-684-11	s	RESISTOR,CHIP 470 1/16W (1608)
R1725 *2	1-218-684-11	s	RESISTOR,CHIP 470 1/16W (1608)
R1726	1-218-676-11	s	RESISTOR,CHIP 220 1/16W(1608)
R1727 *2	1-218-704-11	s	RESISTOR,CHIP 3.3K 1/16W(1608)
*1	1-216-864-11	s	CONDUCTOR, CHIP (1608)
R1728	1-218-704-11	s	RESISTOR,CHIP 3.3K 1/16W(1608)
R1729	1-218-722-11	s	RESISTOR, CHIP 18K 1/16W 1608
R1730	1-218-724-11	s	RESISTOR,CHIP 22K 1/16W(1608)
R1731 *2	1-218-716-11	s	RESISTOR,CHIP 10K 1/16W(1608)
R1732 *2	1-218-740-11	s	RESISTOR,CHIP 100K 1/16W(1608)
R1733 *2	1-218-704-11	s	RESISTOR,CHIP 3.3K 1/16W(1608)
R1800 *2	1-218-752-11	s	RESISTOR,CHIP 330K 1/16W(1608)
*1	1-218-750-11	s	RESISTOR,CHIP 270K 1/16W(1608)
R1801 *2	1-218-752-11	s	RESISTOR,CHIP 330K 1/16W(1608)
*1	1-218-750-11	s	RESISTOR,CHIP 270K 1/16W(1608)
R1802 *2	1-218-736-11	s	RESISTOR,CHIP 68K 1/16W(1608)
*1	1-218-752-11	s	RESISTOR,CHIP 330K 1/16W(1608)
R1803 *2	1-218-736-11	s	RESISTOR,CHIP 68K 1/16W(1608)
*1	1-218-752-11	s	RESISTOR,CHIP 330K 1/16W(1608)
R1804	1-218-716-11	s	RESISTOR,CHIP 10K 1/16W(1608)
R1805	1-218-716-11	s	RESISTOR,CHIP 10K 1/16W(1608)
R1806	1-218-708-11	s	RESISTOR,CHIP 4.7K 1/16W(1608)
R1807	1-218-708-11	s	RESISTOR,CHIP 4.7K 1/16W(1608)
R1808	1-218-716-11	s	RESISTOR,CHIP 10K 1/16W(1608)
R1809	1-218-716-11	s	RESISTOR,CHIP 10K 1/16W(1608)
R1810	1-218-718-11	s	RESISTOR CHIP 12K 1/16W (1608)
R1811	1-218-718-11	s	RESISTOR CHIP 12K 1/16W (1608)
R1812	1-218-724-11	s	RESISTOR,CHIP 22K 1/16W(1608)
R1813	1-218-710-11	s	RESISTOR,CHIP 5.6K 1/16W(1608)
R1814	1-218-724-11	s	RESISTOR,CHIP 22K 1/16W(1608)
R1815	1-218-710-11	s	RESISTOR,CHIP 5.6K 1/16W(1608)
RB500	1-239-409-11	s	RESISTOR NETWORK 47 (1608)
RB700	1-239-409-11	s	RESISTOR NETWORK 47 (1608)
RB900	1-239-409-11	s	RESISTOR NETWORK 47 (1608)
RB1100*2	1-233-412-11	s	RESISTOR,CHIP NETWORK 1K
*1	1-236-904-11	s	RESISTOR NETWORK 1K (1608)
RB1101*2	1-233-575-11	s	RES, CHIP NETWORK 22
*1	1-239-621-11	s	NETWORK RESISTOR 22 (1608)
RB1102*2	1-233-575-11	s	RES, CHIP NETWORK 22
*1	1-239-621-11	s	NETWORK RESISTOR 22 (1608)
RB1400	1-233-270-11	s	RESISTOR, NETWORK (8 GANG) 10K
RB1401	1-233-270-11	s	RESISTOR, NETWORK (8 GANG) 10K
RB1402	1-233-270-11	s	RESISTOR, NETWORK (8 GANG) 10K
RB1403	1-233-270-11	s	RESISTOR, NETWORK (8 GANG) 10K
RB1404	1-233-270-11	s	RESISTOR, NETWORK (8 GANG) 10K
RB1405	1-233-270-11	s	RESISTOR, NETWORK (8 GANG) 10K
RB1406*2	1-233-575-11	s	RES, CHIP NETWORK 22
*1	1-239-621-11	s	NETWORK RESISTOR 22 (1608)
RB1407	1-233-477-11	s	NETWORK, RES (8 GANG) 1K
RB1408	1-233-270-11	s	RESISTOR, NETWORK (8 GANG) 10K
RB1409*2	1-233-810-21	s	RES, NETWORK 100K (3216)
*1	1-236-907-11	s	RESISTOR BLOCK 100K (1608)
RB1410*2	1-233-575-11	s	RES, CHIP NETWORK 22
*1	1-239-621-11	s	NETWORK RESISTOR 22 (1608)
RB1411	1-233-477-11	s	NETWORK, RES (8 GANG) 1K
RB1412	1-233-477-11	s	NETWORK, RES (8 GANG) 1K
RB1413	1-233-270-11	s	RESISTOR, NETWORK (8 GANG) 10K

(APR-52 BOARD for RECORDER)

Ref. No. or Q'ty	Part No.	SP	Description
RB1414*2	1-233-575-11	s	RES, CHIP NETWORK 22
*1	1-239-621-11	s	NETWORK RESISTOR 22 (1608)
RB1415*2	1-233-575-11	s	RES, CHIP NETWORK 22
*1	1-239-621-11	s	NETWORK RESISTOR 22 (1608)
RB1416*2	1-233-412-11	s	RESISTOR,CHIP NETWORK 1K
*1	1-236-904-11	s	RESISTOR NETWORK 1K (1608)
RB1417*2	1-233-575-11	s	RES, CHIP NETWORK 22
*1	1-239-621-11	s	NETWORK RESISTOR 22 (1608)
RB1418*2	1-233-575-11	s	RES, CHIP NETWORK 22
*1	1-239-621-11	s	NETWORK RESISTOR 22 (1608)
RB1419	1-233-477-11	s	NETWORK, RES (8 GANG) 1K
RB1420*2	1-233-412-11	s	RESISTOR,CHIP NETWORK 1K
*1	1-236-904-11	s	RESISTOR NETWORK 1K (1608)
RB1421	1-233-477-11	s	NETWORK, RES (8 GANG) 1K
RB1422	1-233-270-11	s	RESISTOR, NETWORK (8 GANG) 10K
RB1500*2	1-233-576-11	s	RESISTOR,CHIP NETWORK 100
*1	1-239-412-11	s	NETWORK, RESISTOR 100 (1608)
RB1501*2	1-233-576-11	s	RESISTOR,CHIP NETWORK 100
*1	1-239-412-11	s	NETWORK, RESISTOR 100 (1608)
RB1502*2	1-233-576-11	s	RESISTOR,CHIP NETWORK 100
*1	1-239-412-11	s	NETWORK, RESISTOR 100 (1608)
RB1503*2	1-233-576-11	s	RESISTOR,CHIP NETWORK 100
*1	1-239-412-11	s	NETWORK, RESISTOR 100 (1608)
RB1504*2	1-233-576-11	s	RESISTOR,CHIP NETWORK 100
*1	1-239-412-11	s	NETWORK, RESISTOR 100 (1608)
RB1505*2	1-233-576-11	s	RESISTOR,CHIP NETWORK 100
*1	1-239-412-11	s	NETWORK, RESISTOR 100 (1608)
RB1506*2	1-233-576-11	s	RESISTOR,CHIP NETWORK 100
*1	1-239-412-11	s	NETWORK, RESISTOR 100 (1608)
RB1507*2	1-234-378-11	s	RES, NETWORK 10KX4 (1005)
*1	1-236-908-11	s	RESISTOR,NETWORK 10K (3216)
RB1508	1-233-665-11	s	NETWORK, RES (8 GANG) 47K
RB1509*2	1-233-575-11	s	RES, CHIP NETWORK 22
*1	1-239-621-11	s	NETWORK RESISTOR 22 (1608)
RB1510*2	1-233-575-11	s	RES, CHIP NETWORK 22
*1	1-239-621-11	s	NETWORK RESISTOR 22 (1608)
RB1511	1-233-665-11	s	NETWORK, RES (8 GANG) 47K
RB1512	1-233-665-11	s	NETWORK, RES (8 GANG) 47K
RB1513	1-233-665-11	s	NETWORK, RES (8 GANG) 47K
RB1514	1-233-665-11	s	NETWORK, RES (8 GANG) 47K
RB1515*2	1-233-575-11	s	RES, CHIP NETWORK 22
*1	1-239-621-11	s	NETWORK RESISTOR 22 (1608)
RB1516*2	1-233-575-11	s	RES, CHIP NETWORK 22
*1	1-239-621-11	s	NETWORK RESISTOR 22 (1608)
RB1517*2	1-233-575-11	s	RES, CHIP NETWORK 22
*1	1-239-621-11	s	NETWORK RESISTOR 22 (1608)
RB1518*2	1-233-575-11	s	RES, CHIP NETWORK 22
*1	1-239-621-11	s	NETWORK RESISTOR 22 (1608)
RB1519*2	1-233-575-11	s	RES, CHIP NETWORK 22
*1	1-239-621-11	s	NETWORK RESISTOR 22 (1608)
RB1520*2	1-233-575-11	s	RES, CHIP NETWORK 22
*1	1-239-621-11	s	NETWORK RESISTOR 22 (1608)
RB1521*2	1-234-379-11	s	RESISTOR,NETWORK 22KX4 (1005)
RB1522*2	1-234-379-11	s	RESISTOR,NETWORK 22KX4 (1005)
RB1600*2	1-233-411-11	s	RESISTOR,CHIP NETWORK 220/3216
*1	1-239-416-11	s	NETWORK,RESISTOR 220 (1608)
RB1601*2	1-233-411-11	s	RESISTOR,CHIP NETWORK 220/3216
*1	1-239-416-11	s	NETWORK,RESISTOR 220 (1608)
RB1602*2	1-233-411-11	s	RESISTOR,CHIP NETWORK 220/3216
*1	1-239-416-11	s	NETWORK,RESISTOR 220 (1608)
RB1700*2	1-233-577-11	s	RESISTOR, CHIP NETWORK 470
*1	1-239-419-11	s	NETWORK RESISTOR 470 (1608)
RB1701*2	1-234-378-11	s	RES, NETWORK 10KX4 (1005)

(APR-52 BOARD for RECORDER)

Ref. No. or Q'ty	Part No.	SP	Description
RB1702*2	1-234-379-11	s	RESISTOR,NETWORK 22KX4 (1005)
RV100 *2	1-225-792-21	s	RES, ADJ, CERMET 10K
*1	1-237-036-11	s	RESISTOR, ADJ,CERMET 10K
RV101 *2	1-225-788-21	s	RES, ADJ, CERMET 1K
*1	1-237-033-11	s	RESISTOR,ADJ,CERMET 1K
RV102 *2	1-225-793-11	s	RES, ADJ, CERMET 20K
*1	1-237-037-11	s	RESISTOR,ADJ,CERMET 20K
RV103 *2	1-225-789-21	s	RES, ADJ, CERMET 2K
*1	1-237-034-11	s	RESISTOR,ADJ,CERMET 2K
RV200 *2	1-225-792-21	s	RES, ADJ, CERMET 10K
*1	1-237-036-11	s	RESISTOR, ADJ,CERMET 10K
RV201 *2	1-225-788-21	s	RES, ADJ, CERMET 1K
*1	1-237-033-11	s	RESISTOR,ADJ,CERMET 1K
RV202 *2	1-225-793-11	s	RES, ADJ, CERMET 20K
*1	1-237-037-11	s	RESISTOR,ADJ,CERMET 20K
RV203 *2	1-225-789-21	s	RES, ADJ, CERMET 2K
*1	1-237-034-11	s	RESISTOR,ADJ,CERMET 2K
RV300 *2	1-225-792-21	s	RES, ADJ, CERMET 10K
*1	1-237-036-11	s	RESISTOR, ADJ,CERMET 10K
RV301 *2	1-225-788-21	s	RES, ADJ, CERMET 1K
*1	1-237-033-11	s	RESISTOR,ADJ,CERMET 1K
RV302 *2	1-225-793-11	s	RES, ADJ, CERMET 20K
*1	1-237-037-11	s	RESISTOR,ADJ,CERMET 20K
RV303 *2	1-225-789-21	s	RES, ADJ, CERMET 2K
*1	1-237-034-11	s	RESISTOR,ADJ,CERMET 2K
RV400 *2	1-225-792-21	s	RES, ADJ, CERMET 10K
*1	1-237-036-11	s	RESISTOR, ADJ,CERMET 10K
RV401 *2	1-225-788-21	s	RES, ADJ, CERMET 1K
*1	1-237-033-11	s	RESISTOR,ADJ,CERMET 1K
RV402 *2	1-225-793-11	s	RES, ADJ, CERMET 20K
*1	1-237-037-11	s	RESISTOR,ADJ,CERMET 20K
RV403 *2	1-225-789-21	s	RES, ADJ, CERMET 2K
*1	1-237-034-11	s	RESISTOR,ADJ,CERMET 2K
RV500 *2	1-225-792-21	s	RES, ADJ, CERMET 10K
*1	1-237-036-11	s	RESISTOR, ADJ,CERMET 10K
RV501 *2	1-225-787-21	s	RES, ADJ, CERMET 500
*1	1-237-032-11	s	RESISTOR,ADJ,CERMET 500
RV600 *2	1-225-792-21	s	RES, ADJ, CERMET 10K
*1	1-237-036-11	s	RESISTOR, ADJ,CERMET 10K
RV601 *2	1-225-787-21	s	RES, ADJ, CERMET 500
*1	1-237-032-11	s	RESISTOR,ADJ,CERMET 500
RV700 *2	1-225-792-21	s	RES, ADJ, CERMET 10K
*1	1-237-036-11	s	RESISTOR, ADJ,CERMET 10K
RV701 *2	1-225-787-21	s	RES, ADJ, CERMET 500
*1	1-237-032-11	s	RESISTOR,ADJ,CERMET 500
RV800 *2	1-225-792-21	s	RES, ADJ, CERMET 10K
*1	1-237-036-11	s	RESISTOR, ADJ,CERMET 10K
RV801 *2	1-225-787-21	s	RES, ADJ, CERMET 500
*1	1-237-032-11	s	RESISTOR,ADJ,CERMET 500
RV900 *2	1-225-792-21	s	RES, ADJ, CERMET 10K
*1	1-237-036-11	s	RESISTOR, ADJ,CERMET 10K
RV901 *2	1-225-787-21	s	RES, ADJ, CERMET 500
*1	1-237-032-11	s	RESISTOR,ADJ,CERMET 500
RV1000*2	1-225-792-21	s	RES, ADJ, CERMET 10K
*1	1-237-036-11	s	RESISTOR, ADJ,CERMET 10K
RV1001*2	1-225-787-21	s	RES, ADJ, CERMET 500
*1	1-237-032-11	s	RESISTOR,ADJ,CERMET 500
RY100	1-755-379-11	s	RELAY
RY101	1-755-379-11	s	RELAY
RY200	1-755-379-11	s	RELAY
RY201	1-755-379-11	s	RELAY
RY300	1-755-379-11	s	RELAY

(APR-52 BOARD for RECORDER)

Ref. No. or Q'ty	Part No.	SP	Description
RY301	1-755-379-11	s	RELAY
RY400	1-755-379-11	s	RELAY
RY401	1-755-379-11	s	RELAY
RY500	1-755-379-11	s	RELAY
RY600	1-755-379-11	s	RELAY
RY700	1-755-379-11	s	RELAY
RY800	1-755-379-11	s	RELAY
RY900	1-755-379-11	s	RELAY
RY1000	1-755-379-11	s	RELAY
S100	1-692-270-41	s	SWITCH, SLIDE
S101	1-692-270-41	s	SWITCH, SLIDE
S200	1-692-270-41	s	SWITCH, SLIDE
S201	1-692-270-41	s	SWITCH, SLIDE
S300	1-692-270-41	s	SWITCH, SLIDE
S301	1-692-270-41	s	SWITCH, SLIDE
S400	1-692-270-41	s	SWITCH, SLIDE
S401	1-692-270-41	s	SWITCH, SLIDE
S500	1-692-270-41	s	SWITCH, SLIDE
S501	1-692-270-41	s	SWITCH, SLIDE
S600	1-692-270-41	s	SWITCH, SLIDE
S601	1-692-270-41	s	SWITCH, SLIDE
S700	1-692-270-41	s	SWITCH, SLIDE
S701	1-692-270-41	s	SWITCH, SLIDE
S800	1-692-270-41	s	SWITCH, SLIDE
S801	1-692-270-41	s	SWITCH, SLIDE
S900	1-692-270-41	s	SWITCH, SLIDE
S901	1-692-881-41	s	SWITCH, SLIDE
S902	1-692-270-41	s	SWITCH, SLIDE
S1000	1-692-270-41	s	SWITCH, SLIDE
S1001	1-692-881-41	s	SWITCH, SLIDE
S1002	1-692-270-41	s	SWITCH, SLIDE
TH1700	1-810-106-11	s	THERMISTOR, POSITIVE LINEAR
THP100	1-810-106-11	s	THERMISTOR, POSITIVE LINEAR
THP200	1-810-106-11	s	THERMISTOR, POSITIVE LINEAR
THP300	1-810-106-11	s	THERMISTOR, POSITIVE LINEAR
THP400	1-810-106-11	s	THERMISTOR, POSITIVE LINEAR
TP100	1-535-877-22	s	CHIP,CHECKER (TEST POINT)
TP101	1-535-877-22	s	CHIP,CHECKER (TEST POINT)
TP200	1-535-877-22	s	CHIP,CHECKER (TEST POINT)
TP201	1-535-877-22	s	CHIP,CHECKER (TEST POINT)
TP300	1-535-877-22	s	CHIP,CHECKER (TEST POINT)
TP301	1-535-877-22	s	CHIP,CHECKER (TEST POINT)
TP400	1-535-877-22	s	CHIP,CHECKER (TEST POINT)
TP401	1-535-877-22	s	CHIP,CHECKER (TEST POINT)
TP500	1-535-877-22	s	CHIP,CHECKER (TEST POINT)
TP600	1-535-877-22	s	CHIP,CHECKER (TEST POINT)
TP700	1-535-877-22	s	CHIP,CHECKER (TEST POINT)
TP800	1-535-877-22	s	CHIP,CHECKER (TEST POINT)
TP900	1-535-877-22	s	CHIP,CHECKER (TEST POINT)
TP1000	1-535-877-22	s	CHIP,CHECKER (TEST POINT)
TP1700	1-535-877-22	s	CHIP,CHECKER (TEST POINT)
TP1701	1-535-877-22	s	CHIP,CHECKER (TEST POINT)
TP1702	1-535-877-22	s	CHIP,CHECKER (TEST POINT)
TP1703	1-535-877-22	s	CHIP,CHECKER (TEST POINT)
X1200	1-781-809-21	s	OSCILLATOR, CRYSTAL (SMD)

APR-52A BOARD for PLAYER

[Lot No. 261 -] HDW-M2100/P, A2100
MSW-M2100/P
[Lot No. 495 -] MSW-M2100E/P

*1: [Lot No. 261 -] [Board No. suffix 14 -]
*2: [Lot No. 421 -] [Board No. suffix 16 -]

Ref. No. or Q'ty	Part No.	SP	Description
1pc	A-8327-123-C	s	MOUNTED CIRCUIT BOARD, APR-52A
6pcs	7-682-902-11	s	SCREW +PWH 2.6X5
1pc	3-179-084-11	s	LEVER(R),PRINTED C.BOARD
1pc	3-179-085-11	s	LEVER(L),PRINTED C.BOARD
C117 *2	1-127-715-11	s	CAPACITOR,CERAMIC 0.22MF B1608
*1	1-107-826-11	s	CAPACITOR,CHIP CERAMIC 0.1MF
C118	1-127-948-11	s	CAPACITOR,FILM 0.0047MF (2012)
C120	1-163-275-11	s	CAPACITOR CERAMIC 1000PF/50V
C121	1-164-690-11	s	CAPACITOR ,CERAMIC 2200PF CH
C122	1-162-927-11	s	CAPACITOR,CERAMIC 100PF/50V CH
C123	1-126-390-11	s	CAPACITOR ELECT 22MF/6.3V(105)
C124	1-126-390-11	s	CAPACITOR ELECT 22MF/6.3V(105)
C125	1-126-390-11	s	CAPACITOR ELECT 22MF/6.3V(105)
C126	1-164-690-11	s	CAPACITOR ,CERAMIC 2200PF CH
C127	1-164-690-11	s	CAPACITOR ,CERAMIC 2200PF CH
C128	1-107-826-11	s	CAPACITOR,CHIP CERAMIC 0.1MF
C129	1-107-826-11	s	CAPACITOR,CHIP CERAMIC 0.1MF
C130 *2	1-127-692-11	s	CAP, CHIP CERAMIC 10MF B 3216
*1	1-104-851-11	s	CAPACITOR,TANTALUM 10MF/10V
C131	1-107-826-11	s	CAPACITOR,CHIP CERAMIC 0.1MF
C132	1-107-826-11	s	CAPACITOR,CHIP CERAMIC 0.1MF
C133 *2	1-127-692-11	s	CAP, CHIP CERAMIC 10MF B 3216
*1	1-104-851-11	s	CAPACITOR,TANTALUM 10MF/10V
C134	1-107-826-11	s	CAPACITOR,CHIP CERAMIC 0.1MF
C135	1-107-826-11	s	CAPACITOR,CHIP CERAMIC 0.1MF
C136 *2	1-127-692-11	s	CAP, CHIP CERAMIC 10MF B 3216
*1	1-104-851-11	s	CAPACITOR,TANTALUM 10MF/10V
C137 *2	1-127-692-11	s	CAP, CHIP CERAMIC 10MF B 3216
*1	1-104-851-11	s	CAPACITOR,TANTALUM 10MF/10V
C138	1-107-826-11	s	CAPACITOR,CHIP CERAMIC 0.1MF
C139	1-107-826-11	s	CAPACITOR,CHIP CERAMIC 0.1MF
C142	1-107-826-11	s	CAPACITOR,CHIP CERAMIC 0.1MF
C143	1-107-826-11	s	CAPACITOR,CHIP CERAMIC 0.1MF
C144	1-107-826-11	s	CAPACITOR,CHIP CERAMIC 0.1MF
C145	1-126-390-11	s	CAPACITOR ELECT 22MF/6.3V(105)
C146	1-126-390-11	s	CAPACITOR ELECT 22MF/6.3V(105)
C217 *2	1-127-715-11	s	CAPACITOR,CERAMIC 0.22MF B1608
*1	1-107-826-11	s	CAPACITOR,CHIP CERAMIC 0.1MF
C218	1-127-948-11	s	CAPACITOR,FILM 0.0047MF (2012)
C220	1-163-275-11	s	CAPACITOR CERAMIC 1000PF/50V
C221	1-164-690-11	s	CAPACITOR ,CERAMIC 2200PF CH
C222	1-162-927-11	s	CAPACITOR,CERAMIC 100PF/50V CH
C223	1-126-390-11	s	CAPACITOR ELECT 22MF/6.3V(105)
C224	1-126-390-11	s	CAPACITOR ELECT 22MF/6.3V(105)
C225	1-126-390-11	s	CAPACITOR ELECT 22MF/6.3V(105)
C238	1-107-826-11	s	CAPACITOR,CHIP CERAMIC 0.1MF
C239	1-107-826-11	s	CAPACITOR,CHIP CERAMIC 0.1MF
C242	1-107-826-11	s	CAPACITOR,CHIP CERAMIC 0.1MF
C243	1-107-826-11	s	CAPACITOR,CHIP CERAMIC 0.1MF
C244	1-107-826-11	s	CAPACITOR,CHIP CERAMIC 0.1MF
C250	1-162-919-11	s	CAPACITOR,CERAMIC 22PF/50V CH
C251	1-162-919-11	s	CAPACITOR,CERAMIC 22PF/50V CH
C317 *2	1-127-715-11	s	CAPACITOR,CERAMIC 0.22MF B1608
*1	1-107-826-11	s	CAPACITOR,CHIP CERAMIC 0.1MF
C318	1-127-948-11	s	CAPACITOR,FILM 0.0047MF (2012)

(APR-52A BOARD for PLAYER)

Ref. No. or Q'ty	Part No.	SP	Description
C320	1-163-275-11	s	CAPACITOR CERAMIC 1000PF/50V
C321	1-164-690-11	s	CAPACITOR ,CERAMIC 2200PF CH
C322	1-162-927-11	s	CAPACITOR,CERAMIC 100PF/50V CH
C323	1-126-390-11	s	CAPACITOR ELECT 22MF/6.3V(105)
C324	1-126-390-11	s	CAPACITOR ELECT 22MF/6.3V(105)
C325	1-126-390-11	s	CAPACITOR ELECT 22MF/6.3V(105)
C326	1-164-690-11	s	CAPACITOR ,CERAMIC 2200PF CH
C327	1-164-690-11	s	CAPACITOR ,CERAMIC 2200PF CH
C328	1-107-826-11	s	CAPACITOR,CHIP CERAMIC 0.1MF
C329	1-107-826-11	s	CAPACITOR,CHIP CERAMIC 0.1MF
C330 *2	1-127-692-11	s	CAP, CHIP CERAMIC 10MF B 3216
*1	1-104-851-11	s	CAPACITOR,TANTALUM 10MF/10V
C331	1-107-826-11	s	CAPACITOR,CHIP CERAMIC 0.1MF
C332	1-107-826-11	s	CAPACITOR,CHIP CERAMIC 0.1MF
C333 *2	1-127-692-11	s	CAP, CHIP CERAMIC 10MF B 3216
*1	1-104-851-11	s	CAPACITOR,TANTALUM 10MF/10V
C334	1-107-826-11	s	CAPACITOR,CHIP CERAMIC 0.1MF
C335	1-107-826-11	s	CAPACITOR,CHIP CERAMIC 0.1MF
C336 *2	1-127-692-11	s	CAP, CHIP CERAMIC 10MF B 3216
*1	1-104-851-11	s	CAPACITOR,TANTALUM 10MF/10V
C337 *2	1-127-692-11	s	CAP, CHIP CERAMIC 10MF B 3216
*1	1-104-851-11	s	CAPACITOR,TANTALUM 10MF/10V
C338	1-107-826-11	s	CAPACITOR,CHIP CERAMIC 0.1MF
C339	1-107-826-11	s	CAPACITOR,CHIP CERAMIC 0.1MF
C342	1-107-826-11	s	CAPACITOR,CHIP CERAMIC 0.1MF
C343	1-107-826-11	s	CAPACITOR,CHIP CERAMIC 0.1MF
C344	1-107-826-11	s	CAPACITOR,CHIP CERAMIC 0.1MF
C345	1-126-390-11	s	CAPACITOR ELECT 22MF/6.3V(105)
C346	1-126-390-11	s	CAPACITOR ELECT 22MF/6.3V(105)
C417 *2	1-127-715-11	s	CAPACITOR,CERAMIC 0.22MF B1608
*1	1-107-826-11	s	CAPACITOR,CHIP CERAMIC 0.1MF
C418	1-127-948-11	s	CAPACITOR,FILM 0.0047MF (2012)
C420	1-163-275-11	s	CAPACITOR CERAMIC 1000PF/50V
C421	1-164-690-11	s	CAPACITOR ,CERAMIC 2200PF CH
C422	1-162-927-11	s	CAPACITOR,CERAMIC 100PF/50V CH
C423	1-126-390-11	s	CAPACITOR ELECT 22MF/6.3V(105)
C424	1-126-390-11	s	CAPACITOR ELECT 22MF/6.3V(105)
C425	1-126-390-11	s	CAPACITOR ELECT 22MF/6.3V(105)
C438	1-107-826-11	s	CAPACITOR,CHIP CERAMIC 0.1MF
C439	1-107-826-11	s	CAPACITOR,CHIP CERAMIC 0.1MF
C442	1-107-826-11	s	CAPACITOR,CHIP CERAMIC 0.1MF
C443	1-107-826-11	s	CAPACITOR,CHIP CERAMIC 0.1MF
C444	1-107-826-11	s	CAPACITOR,CHIP CERAMIC 0.1MF
C450	1-162-919-11	s	CAPACITOR,CERAMIC 22PF/50V CH
C451	1-162-919-11	s	CAPACITOR,CERAMIC 22PF/50V CH
C500	1-107-826-11	s	CAPACITOR,CHIP CERAMIC 0.1MF
C501	1-107-826-11	s	CAPACITOR,CHIP CERAMIC 0.1MF
C504	1-107-826-11	s	CAPACITOR,CHIP CERAMIC 0.1MF
C505 *2	1-127-692-11	s	CAP, CHIP CERAMIC 10MF B 3216
*1	1-104-851-11	s	CAPACITOR,TANTALUM 10MF/10V
C506	1-164-690-11	s	CAPACITOR ,CERAMIC 2200PF CH
C507 *2	1-127-692-11	s	CAP, CHIP CERAMIC 10MF B 3216
*1	1-104-851-11	s	CAPACITOR,TANTALUM 10MF/10V
C508	1-164-217-11	s	CAPACITOR,CERAMIC 150PF/50V CH
C509	1-164-217-11	s	CAPACITOR,CERAMIC 150PF/50V CH
C510	1-164-217-11	s	CAPACITOR,CERAMIC 150PF/50V CH
C511	1-164-217-11	s	CAPACITOR,CERAMIC 150PF/50V CH
C512	1-164-217-11	s	CAPACITOR,CERAMIC 150PF/50V CH
C513	1-164-217-11	s	CAPACITOR,CERAMIC 150PF/50V CH
C514	1-164-230-11	s	CAPACITOR,CERAMIC 220PF/50V

(APR-52A BOARD for PLAYER)

Ref. No. or Q'ty	Part No.	SP	Description
C515	1-127-948-11	s	CAPACITOR,FILM 0.0047MF (2012)
C516 *2	1-127-715-11	s	CAPACITOR,CERAMIC 0.22MF B1608
*1	1-107-826-11	s	CAPACITOR,CHIP CERAMIC 0.1MF
C517	1-127-948-11	s	CAPACITOR,FILM 0.0047MF (2012)
C518	1-164-690-11	s	CAPACITOR ,CERAMIC 2200PF CH
C519	1-162-915-11	s	CAPACITOR,CERAMIC 10PF/50V CH
C520	1-162-919-11	s	CAPACITOR,CERAMIC 22PF/50V CH
C521	1-162-927-11	s	CAPACITOR,CERAMIC 100PF/50V CH
C522	1-115-153-11	s	CAPACITOR,ELECT 4.7MF/16V(BP)
C523	1-115-153-11	s	CAPACITOR,ELECT 4.7MF/16V(BP)
C524	1-162-919-11	s	CAPACITOR,CERAMIC 22PF/50V CH
C525	1-162-927-11	s	CAPACITOR,CERAMIC 100PF/50V CH
C526	1-115-153-11	s	CAPACITOR,ELECT 4.7MF/16V(BP)
C527	1-115-153-11	s	CAPACITOR,ELECT 4.7MF/16V(BP)
C528	1-126-399-11	s	CAPACITOR ELECT 10MF/35V(CHIP)
C529	1-126-399-11	s	CAPACITOR ELECT 10MF/35V(CHIP)
C530	1-107-826-11	s	CAPACITOR,CHIP CERAMIC 0.1MF
C531	1-107-826-11	s	CAPACITOR,CHIP CERAMIC 0.1MF
C532	1-163-275-11	s	CAPACITOR CERAMIC 1000PF/50V
C533	1-126-391-11	s	CAPACITOR ELECT 47MF/6.3V(105)
C534	1-127-948-11	s	CAPACITOR,FILM 0.0047MF (2012)
C535	1-164-230-11	s	CAPACITOR,CERAMIC 220PF/50V
C540	1-107-826-11	s	CAPACITOR,CHIP CERAMIC 0.1MF
C541	1-107-826-11	s	CAPACITOR,CHIP CERAMIC 0.1MF
C542	1-107-826-11	s	CAPACITOR,CHIP CERAMIC 0.1MF
C543	1-107-826-11	s	CAPACITOR,CHIP CERAMIC 0.1MF
C544	1-162-919-11	s	CAPACITOR,CERAMIC 22PF/50V CH
C546	1-162-919-11	s	CAPACITOR,CERAMIC 22PF/50V CH
C556	1-107-826-11	s	CAPACITOR,CHIP CERAMIC 0.1MF
C557	1-162-919-11	s	CAPACITOR,CERAMIC 22PF/50V CH
C558	1-162-919-11	s	CAPACITOR,CERAMIC 22PF/50V CH
C600	1-162-919-11	s	CAPACITOR,CERAMIC 22PF/50V CH
C602	1-162-919-11	s	CAPACITOR,CERAMIC 22PF/50V CH
C604	1-107-826-11	s	CAPACITOR,CHIP CERAMIC 0.1MF
C605 *2	1-127-692-11	s	CAP, CHIP CERAMIC 10MF B 3216
*1	1-104-851-11	s	CAPACITOR,TANTALUM 10MF/10V
C606	1-164-690-11	s	CAPACITOR ,CERAMIC 2200PF CH
C607 *2	1-127-692-11	s	CAP, CHIP CERAMIC 10MF B 3216
*1	1-104-851-11	s	CAPACITOR,TANTALUM 10MF/10V
C608	1-164-217-11	s	CAPACITOR,CERAMIC 150PF/50V CH
C609	1-164-217-11	s	CAPACITOR,CERAMIC 150PF/50V CH
C610	1-164-217-11	s	CAPACITOR,CERAMIC 150PF/50V CH
C611	1-164-217-11	s	CAPACITOR,CERAMIC 150PF/50V CH
C612	1-164-217-11	s	CAPACITOR,CERAMIC 150PF/50V CH
C613	1-164-217-11	s	CAPACITOR,CERAMIC 150PF/50V CH
C614	1-164-230-11	s	CAPACITOR,CERAMIC 220PF/50V
C615	1-127-948-11	s	CAPACITOR,FILM 0.0047MF (2012)
C616 *2	1-127-715-11	s	CAPACITOR,CERAMIC 0.22MF B1608
*1	1-107-826-11	s	CAPACITOR,CHIP CERAMIC 0.1MF
C617	1-127-948-11	s	CAPACITOR,FILM 0.0047MF (2012)
C618	1-164-690-11	s	CAPACITOR ,CERAMIC 2200PF CH
C619	1-162-915-11	s	CAPACITOR,CERAMIC 10PF/50V CH
C620	1-162-919-11	s	CAPACITOR,CERAMIC 22PF/50V CH
C621	1-162-927-11	s	CAPACITOR,CERAMIC 100PF/50V CH
C622	1-115-153-11	s	CAPACITOR,ELECT 4.7MF/16V(BP)
C623	1-115-153-11	s	CAPACITOR,ELECT 4.7MF/16V(BP)
C624	1-162-919-11	s	CAPACITOR,CERAMIC 22PF/50V CH
C625	1-162-927-11	s	CAPACITOR,CERAMIC 100PF/50V CH
C626	1-115-153-11	s	CAPACITOR,ELECT 4.7MF/16V(BP)

(APR-52A BOARD for PLAYER)

Ref. No. or Q'ty	Part No.	SP	Description
C627	1-115-153-11	s	CAPACITOR,ELECT 4.7MF/16V(BP)
C628	1-126-399-11	s	CAPACITOR ELECT 10MF/35V(CHIP)
C629	1-126-399-11	s	CAPACITOR ELECT 10MF/35V(CHIP)
C630	1-107-826-11	s	CAPACITOR,CHIP CERAMIC 0.1MF
C631	1-107-826-11	s	CAPACITOR,CHIP CERAMIC 0.1MF
C632	1-163-275-11	s	CAPACITOR CERAMIC 1000PF/50V
C633	1-126-391-11	s	CAPACITOR ELECT 47MF/6.3V(105)
C634	1-127-948-11	s	CAPACITOR,FILM 0.0047MF (2012)
C635	1-164-230-11	s	CAPACITOR,CERAMIC 220PF/50V
C640	1-107-826-11	s	CAPACITOR,CHIP CERAMIC 0.1MF
C641	1-107-826-11	s	CAPACITOR,CHIP CERAMIC 0.1MF
C642	1-107-826-11	s	CAPACITOR,CHIP CERAMIC 0.1MF
C643	1-107-826-11	s	CAPACITOR,CHIP CERAMIC 0.1MF
C656	1-107-826-11	s	CAPACITOR,CHIP CERAMIC 0.1MF
C657	1-162-919-11	s	CAPACITOR,CERAMIC 22PF/50V CH
C658	1-162-919-11	s	CAPACITOR,CERAMIC 22PF/50V CH
C700	1-107-826-11	s	CAPACITOR,CHIP CERAMIC 0.1MF
C701	1-107-826-11	s	CAPACITOR,CHIP CERAMIC 0.1MF
C702	1-127-948-11	s	CAPACITOR,FILM 0.0047MF (2012)
C703	1-164-230-11	s	CAPACITOR,CERAMIC 220PF/50V
C704	1-107-826-11	s	CAPACITOR,CHIP CERAMIC 0.1MF
C705 *2	1-127-692-11	s	CAP, CHIP CERAMIC 10MF B 3216
*1	1-104-851-11	s	CAPACITOR,TANTALUM 10MF/10V
C706	1-164-690-11	s	CAPACITOR ,CERAMIC 2200PF CH
C707 *2	1-127-692-11	s	CAP, CHIP CERAMIC 10MF B 3216
*1	1-104-851-11	s	CAPACITOR,TANTALUM 10MF/10V
C708	1-164-217-11	s	CAPACITOR,CERAMIC 150PF/50V CH
C709	1-164-217-11	s	CAPACITOR,CERAMIC 150PF/50V CH
C710	1-164-217-11	s	CAPACITOR,CERAMIC 150PF/50V CH
C711	1-164-217-11	s	CAPACITOR,CERAMIC 150PF/50V CH
C712	1-164-217-11	s	CAPACITOR,CERAMIC 150PF/50V CH
C713	1-164-217-11	s	CAPACITOR,CERAMIC 150PF/50V CH
C714	1-164-230-11	s	CAPACITOR,CERAMIC 220PF/50V
C715	1-127-948-11	s	CAPACITOR,FILM 0.0047MF (2012)
C716 *2	1-127-715-11	s	CAPACITOR,CERAMIC 0.22MF B1608
*1	1-107-826-11	s	CAPACITOR,CHIP CERAMIC 0.1MF
C717	1-127-948-11	s	CAPACITOR,FILM 0.0047MF (2012)
C718	1-164-690-11	s	CAPACITOR ,CERAMIC 2200PF CH
C719	1-162-915-11	s	CAPACITOR,CERAMIC 10PF/50V CH
C720	1-162-919-11	s	CAPACITOR,CERAMIC 22PF/50V CH
C721	1-115-153-11	s	CAPACITOR,ELECT 4.7MF/16V(BP)
C722	1-115-153-11	s	CAPACITOR,ELECT 4.7MF/16V(BP)
C723	1-162-927-11	s	CAPACITOR,CERAMIC 100PF/50V CH
C724	1-162-919-11	s	CAPACITOR,CERAMIC 22PF/50V CH
C725	1-115-153-11	s	CAPACITOR,ELECT 4.7MF/16V(BP)
C726	1-162-927-11	s	CAPACITOR,CERAMIC 100PF/50V CH
C727	1-115-153-11	s	CAPACITOR,ELECT 4.7MF/16V(BP)
C728	1-126-399-11	s	CAPACITOR ELECT 10MF/35V(CHIP)
C729	1-126-399-11	s	CAPACITOR ELECT 10MF/35V(CHIP)
C730	1-107-826-11	s	CAPACITOR,CHIP CERAMIC 0.1MF
C731	1-107-826-11	s	CAPACITOR,CHIP CERAMIC 0.1MF
C732	1-163-275-11	s	CAPACITOR CERAMIC 1000PF/50V
C733	1-126-391-11	s	CAPACITOR ELECT 47MF/6.3V(105)
C734	1-162-919-11	s	CAPACITOR,CERAMIC 22PF/50V CH
C736	1-162-919-11	s	CAPACITOR,CERAMIC 22PF/50V CH
C740	1-107-826-11	s	CAPACITOR,CHIP CERAMIC 0.1MF
C741	1-107-826-11	s	CAPACITOR,CHIP CERAMIC 0.1MF
C742	1-107-826-11	s	CAPACITOR,CHIP CERAMIC 0.1MF
C743	1-107-826-11	s	CAPACITOR,CHIP CERAMIC 0.1MF

(APR-52A BOARD for PLAYER)

Ref. No. or Q'ty	Part No.	SP	Description
C756	1-107-826-11	s	CAPACITOR,CHIP CERAMIC 0.1MF
C757	1-162-919-11	s	CAPACITOR,CERAMIC 22PF/50V CH
C758	1-162-919-11	s	CAPACITOR,CERAMIC 22PF/50V CH
C802	1-127-948-11	s	CAPACITOR,FILM 0.0047MF (2012)
C803	1-164-230-11	s	CAPACITOR,CERAMIC 220PF/50V
C804	1-107-826-11	s	CAPACITOR,CHIP CERAMIC 0.1MF
C805 *2	1-127-692-11	s	CAP, CHIP CERAMIC 10MF B 3216
*1	1-104-851-11	s	CAPACITOR,TANTALUM 10MF/10V
C806	1-164-690-11	s	CAPACITOR ,CERAMIC 2200PF CH
C807 *2	1-127-692-11	s	CAP, CHIP CERAMIC 10MF B 3216
*1	1-104-851-11	s	CAPACITOR,TANTALUM 10MF/10V
C808	1-164-217-11	s	CAPACITOR,CERAMIC 150PF/50V CH
C809	1-164-217-11	s	CAPACITOR,CERAMIC 150PF/50V CH
C810	1-164-217-11	s	CAPACITOR,CERAMIC 150PF/50V CH
C811	1-164-217-11	s	CAPACITOR,CERAMIC 150PF/50V CH
C812	1-164-217-11	s	CAPACITOR,CERAMIC 150PF/50V CH
C813	1-164-217-11	s	CAPACITOR,CERAMIC 150PF/50V CH
C814	1-164-230-11	s	CAPACITOR,CERAMIC 220PF/50V
C815	1-127-948-11	s	CAPACITOR,FILM 0.0047MF (2012)
C816 *2	1-127-715-11	s	CAPACITOR,CERAMIC 0.22MF B1608
*1	1-107-826-11	s	CAPACITOR,CHIP CERAMIC 0.1MF
C817	1-127-948-11	s	CAPACITOR,FILM 0.0047MF (2012)
C818	1-164-690-11	s	CAPACITOR ,CERAMIC 2200PF CH
C819	1-162-915-11	s	CAPACITOR,CERAMIC 10PF/50V CH
C820	1-162-919-11	s	CAPACITOR,CERAMIC 22PF/50V CH
C821	1-115-153-11	s	CAPACITOR,ELECT 4.7MF/16V(BP)
C822	1-115-153-11	s	CAPACITOR,ELECT 4.7MF/16V(BP)
C823	1-162-927-11	s	CAPACITOR,CERAMIC 100PF/50V CH
C824	1-162-919-11	s	CAPACITOR,CERAMIC 22PF/50V CH
C825	1-115-153-11	s	CAPACITOR,ELECT 4.7MF/16V(BP)
C826	1-162-927-11	s	CAPACITOR,CERAMIC 100PF/50V CH
C827	1-115-153-11	s	CAPACITOR,ELECT 4.7MF/16V(BP)
C828	1-126-399-11	s	CAPACITOR ELECT 10MF/35V(CHIP)
C829	1-126-399-11	s	CAPACITOR ELECT 10MF/35V(CHIP)
C830	1-107-826-11	s	CAPACITOR,CHIP CERAMIC 0.1MF
C831	1-107-826-11	s	CAPACITOR,CHIP CERAMIC 0.1MF
C832	1-163-275-11	s	CAPACITOR CERAMIC 1000PF/50V
C833	1-126-391-11	s	CAPACITOR ELECT 47MF/6.3V(105)
C834	1-162-919-11	s	CAPACITOR,CERAMIC 22PF/50V CH
C836	1-162-919-11	s	CAPACITOR,CERAMIC 22PF/50V CH
C840	1-107-826-11	s	CAPACITOR,CHIP CERAMIC 0.1MF
C841	1-107-826-11	s	CAPACITOR,CHIP CERAMIC 0.1MF
C842	1-107-826-11	s	CAPACITOR,CHIP CERAMIC 0.1MF
C843	1-107-826-11	s	CAPACITOR,CHIP CERAMIC 0.1MF
C856	1-107-826-11	s	CAPACITOR,CHIP CERAMIC 0.1MF
C857	1-162-919-11	s	CAPACITOR,CERAMIC 22PF/50V CH
C858	1-162-919-11	s	CAPACITOR,CERAMIC 22PF/50V CH
C900	1-107-826-11	s	CAPACITOR,CHIP CERAMIC 0.1MF
C901	1-107-826-11	s	CAPACITOR,CHIP CERAMIC 0.1MF
C904	1-107-826-11	s	CAPACITOR,CHIP CERAMIC 0.1MF
C905 *2	1-127-692-11	s	CAP, CHIP CERAMIC 10MF B 3216
*1	1-104-851-11	s	CAPACITOR,TANTALUM 10MF/10V
C906	1-163-275-11	s	CAPACITOR CERAMIC 1000PF/50V
C907 *2	1-127-692-11	s	CAP, CHIP CERAMIC 10MF B 3216
*1	1-104-851-11	s	CAPACITOR,TANTALUM 10MF/10V
C908	1-164-217-11	s	CAPACITOR,CERAMIC 150PF/50V CH
C909	1-164-217-11	s	CAPACITOR,CERAMIC 150PF/50V CH
C910	1-164-217-11	s	CAPACITOR,CERAMIC 150PF/50V CH
C911	1-164-217-11	s	CAPACITOR,CERAMIC 150PF/50V CH
C912	1-164-217-11	s	CAPACITOR,CERAMIC 150PF/50V CH

(APR-52A BOARD for PLAYER)

Ref. No. or Q'ty	Part No.	SP	Description
C913	1-164-217-11	s	CAPACITOR,CERAMIC 150PF/50V CH
C914	1-163-275-11	s	CAPACITOR CERAMIC 1000PF/50V
C915	1-127-948-11	s	CAPACITOR,FILM 0.0047MF (2012)
C916 *2	1-127-715-11	s	CAPACITOR,CERAMIC 0.22MF B1608
*1	1-107-826-11	s	CAPACITOR,CHIP CERAMIC 0.1MF
C917	1-127-948-11	s	CAPACITOR,FILM 0.0047MF (2012)
C918	1-164-690-11	s	CAPACITOR ,CERAMIC 2200PF CH
C920	1-162-915-11	s	CAPACITOR,CERAMIC 10PF/50V CH
C921	1-162-919-11	s	CAPACITOR,CERAMIC 22PF/50V CH
C922	1-115-153-11	s	CAPACITOR,ELECT 4.7MF/16V(BP)
C923	1-115-153-11	s	CAPACITOR,ELECT 4.7MF/16V(BP)
C924	1-162-927-11	s	CAPACITOR,CERAMIC 100PF/50V CH
C925	1-162-919-11	s	CAPACITOR,CERAMIC 22PF/50V CH
C926	1-115-153-11	s	CAPACITOR,ELECT 4.7MF/16V(BP)
C927	1-162-927-11	s	CAPACITOR,CERAMIC 100PF/50V CH
C928	1-115-153-11	s	CAPACITOR,ELECT 4.7MF/16V(BP)
C929	1-126-399-11	s	CAPACITOR ELECT 10MF/35V(CHIP)
C930	1-126-399-11	s	CAPACITOR ELECT 10MF/35V(CHIP)
C931	1-107-826-11	s	CAPACITOR,CHIP CERAMIC 0.1MF
C932	1-107-826-11	s	CAPACITOR,CHIP CERAMIC 0.1MF
C933	1-163-275-11	s	CAPACITOR CERAMIC 1000PF/50V
C934	1-126-391-11	s	CAPACITOR ELECT 47MF/6.3V(105)
C935	1-162-919-11	s	CAPACITOR,CERAMIC 22PF/50V CH
C937	1-162-919-11	s	CAPACITOR,CERAMIC 22PF/50V CH
C940	1-107-826-11	s	CAPACITOR,CHIP CERAMIC 0.1MF
C941	1-107-826-11	s	CAPACITOR,CHIP CERAMIC 0.1MF
C942	1-107-826-11	s	CAPACITOR,CHIP CERAMIC 0.1MF
C943	1-107-826-11	s	CAPACITOR,CHIP CERAMIC 0.1MF
C945	1-164-315-11	s	CAPACITOR,CERAMIC 470PF/50V CH
C956	1-107-826-11	s	CAPACITOR,CHIP CERAMIC 0.1MF
C957	1-162-919-11	s	CAPACITOR,CERAMIC 22PF/50V CH
C958	1-162-919-11	s	CAPACITOR,CERAMIC 22PF/50V CH
C959	1-162-927-11	s	CAPACITOR,CERAMIC 100PF/50V CH
C1000	1-162-919-11	s	CAPACITOR,CERAMIC 22PF/50V CH
C1002	1-162-919-11	s	CAPACITOR,CERAMIC 22PF/50V CH
C1004	1-107-826-11	s	CAPACITOR,CHIP CERAMIC 0.1MF
C1005 *2	1-127-692-11	s	CAP, CHIP CERAMIC 10MF B 3216
*1	1-104-851-11	s	CAPACITOR,TANTALUM 10MF/10V
C1006	1-163-275-11	s	CAPACITOR CERAMIC 1000PF/50V
C1007 *2	1-127-692-11	s	CAP, CHIP CERAMIC 10MF B 3216
*1	1-104-851-11	s	CAPACITOR,TANTALUM 10MF/10V
C1008	1-164-217-11	s	CAPACITOR,CERAMIC 150PF/50V CH
C1009	1-164-217-11	s	CAPACITOR,CERAMIC 150PF/50V CH
C1010	1-164-217-11	s	CAPACITOR,CERAMIC 150PF/50V CH
C1011	1-164-217-11	s	CAPACITOR,CERAMIC 150PF/50V CH
C1012	1-164-217-11	s	CAPACITOR,CERAMIC 150PF/50V CH
C1013	1-164-217-11	s	CAPACITOR,CERAMIC 150PF/50V CH
C1014	1-163-275-11	s	CAPACITOR CERAMIC 1000PF/50V
C1015	1-127-948-11	s	CAPACITOR,FILM 0.0047MF (2012)
C1016 *2	1-127-715-11	s	CAPACITOR,CERAMIC 0.22MF B1608
*1	1-107-826-11	s	CAPACITOR,CHIP CERAMIC 0.1MF
C1017	1-127-948-11	s	CAPACITOR,FILM 0.0047MF (2012)
C1018	1-164-690-11	s	CAPACITOR ,CERAMIC 2200PF CH
C1020	1-162-915-11	s	CAPACITOR,CERAMIC 10PF/50V CH
C1021	1-162-919-11	s	CAPACITOR,CERAMIC 22PF/50V CH
C1022	1-115-153-11	s	CAPACITOR,ELECT 4.7MF/16V(BP)
C1023	1-115-153-11	s	CAPACITOR,ELECT 4.7MF/16V(BP)
C1024	1-162-927-11	s	CAPACITOR,CERAMIC 100PF/50V CH
C1025	1-162-919-11	s	CAPACITOR,CERAMIC 22PF/50V CH

(APR-52A BOARD for PLAYER)

Ref. No. or Q'ty	Part No.	SP	Description
C1026	1-115-153-11	s	CAPACITOR,ELECT 4.7MF/16V(BP)
C1027	1-162-927-11	s	CAPACITOR,CERAMIC 100PF/50V CH
C1028	1-115-153-11	s	CAPACITOR,ELECT 4.7MF/16V(BP)
C1029	1-126-399-11	s	CAPACITOR ELECT 10MF/35V(CHIP)
C1030	1-126-399-11	s	CAPACITOR ELECT 10MF/35V(CHIP)
C1031	1-107-826-11	s	CAPACITOR,CHIP CERAMIC 0.1MF
C1032	1-107-826-11	s	CAPACITOR,CHIP CERAMIC 0.1MF
C1033	1-163-275-11	s	CAPACITOR CERAMIC 1000PF/50V
C1034	1-126-391-11	s	CAPACITOR ELECT 47MF/6.3V(105)
C1040	1-107-826-11	s	CAPACITOR,CHIP CERAMIC 0.1MF
C1041	1-107-826-11	s	CAPACITOR,CHIP CERAMIC 0.1MF
C1042	1-107-826-11	s	CAPACITOR,CHIP CERAMIC 0.1MF
C1043	1-107-826-11	s	CAPACITOR,CHIP CERAMIC 0.1MF
C1045	1-164-315-11	s	CAPACITOR,CERAMIC 470PF/50V CH
C1056	1-107-826-11	s	CAPACITOR,CHIP CERAMIC 0.1MF
C1057	1-162-919-11	s	CAPACITOR,CERAMIC 22PF/50V CH
C1058	1-162-919-11	s	CAPACITOR,CERAMIC 22PF/50V CH
C1059	1-162-927-11	s	CAPACITOR,CERAMIC 100PF/50V CH
C1100	1-107-826-11	s	CAPACITOR,CHIP CERAMIC 0.1MF
C1101	1-107-826-11	s	CAPACITOR,CHIP CERAMIC 0.1MF
C1102	1-107-826-11	s	CAPACITOR,CHIP CERAMIC 0.1MF
C1103	1-107-826-11	s	CAPACITOR,CHIP CERAMIC 0.1MF
C1104	1-107-826-11	s	CAPACITOR,CHIP CERAMIC 0.1MF
C1119	1-107-826-11	s	CAPACITOR,CHIP CERAMIC 0.1MF
C1120	1-107-826-11	s	CAPACITOR,CHIP CERAMIC 0.1MF
C1121	1-107-826-11	s	CAPACITOR,CHIP CERAMIC 0.1MF
C1122	1-107-826-11	s	CAPACITOR,CHIP CERAMIC 0.1MF
C1123	1-107-826-11	s	CAPACITOR,CHIP CERAMIC 0.1MF
C1124	1-107-826-11	s	CAPACITOR,CHIP CERAMIC 0.1MF
C1200	1-107-826-11	s	CAPACITOR,CHIP CERAMIC 0.1MF
C1205	1-107-826-11	s	CAPACITOR,CHIP CERAMIC 0.1MF
C1206	1-107-826-11	s	CAPACITOR,CHIP CERAMIC 0.1MF
C1207	1-107-826-11	s	CAPACITOR,CHIP CERAMIC 0.1MF
C1209	1-162-927-11	s	CAPACITOR,CERAMIC 100PF/50V CH
C1213	1-107-826-11	s	CAPACITOR,CHIP CERAMIC 0.1MF
C1214	1-107-826-11	s	CAPACITOR,CHIP CERAMIC 0.1MF
C1215	1-107-826-11	s	CAPACITOR,CHIP CERAMIC 0.1MF
C1400	1-107-826-11	s	CAPACITOR,CHIP CERAMIC 0.1MF
C1401	1-107-826-11	s	CAPACITOR,CHIP CERAMIC 0.1MF
C1402	1-107-826-11	s	CAPACITOR,CHIP CERAMIC 0.1MF
C1403	1-107-826-11	s	CAPACITOR,CHIP CERAMIC 0.1MF
C1404	1-107-826-11	s	CAPACITOR,CHIP CERAMIC 0.1MF
C1405	1-107-826-11	s	CAPACITOR,CHIP CERAMIC 0.1MF
C1406	1-107-826-11	s	CAPACITOR,CHIP CERAMIC 0.1MF
C1407	1-107-826-11	s	CAPACITOR,CHIP CERAMIC 0.1MF
C1408	1-107-826-11	s	CAPACITOR,CHIP CERAMIC 0.1MF
C1409	1-107-826-11	s	CAPACITOR,CHIP CERAMIC 0.1MF
C1410	1-107-826-11	s	CAPACITOR,CHIP CERAMIC 0.1MF
C1411	1-107-826-11	s	CAPACITOR,CHIP CERAMIC 0.1MF
C1412	1-107-826-11	s	CAPACITOR,CHIP CERAMIC 0.1MF
C1413	1-107-826-11	s	CAPACITOR,CHIP CERAMIC 0.1MF
C1414	1-107-826-11	s	CAPACITOR,CHIP CERAMIC 0.1MF
C1415	1-107-826-11	s	CAPACITOR,CHIP CERAMIC 0.1MF
C1416	1-107-826-11	s	CAPACITOR,CHIP CERAMIC 0.1MF
C1417	1-107-826-11	s	CAPACITOR,CHIP CERAMIC 0.1MF
C1418	1-107-826-11	s	CAPACITOR,CHIP CERAMIC 0.1MF
C1419	1-107-826-11	s	CAPACITOR,CHIP CERAMIC 0.1MF
C1420	1-107-826-11	s	CAPACITOR,CHIP CERAMIC 0.1MF
C1421	1-107-826-11	s	CAPACITOR,CHIP CERAMIC 0.1MF

(APR-52A BOARD for PLAYER)

Ref. No. or Q'ty	Part No.	SP	Description
C1422	1-107-826-11	s	CAPACITOR,CHIP CERAMIC 0.1MF
C1423	1-107-826-11	s	CAPACITOR,CHIP CERAMIC 0.1MF
C1424	1-107-826-11	s	CAPACITOR,CHIP CERAMIC 0.1MF
C1425	1-107-826-11	s	CAPACITOR,CHIP CERAMIC 0.1MF
C1426	1-107-826-11	s	CAPACITOR,CHIP CERAMIC 0.1MF
C1427	1-107-826-11	s	CAPACITOR,CHIP CERAMIC 0.1MF
C1428	1-107-826-11	s	CAPACITOR,CHIP CERAMIC 0.1MF
C1429	1-107-826-11	s	CAPACITOR,CHIP CERAMIC 0.1MF
C1430	1-107-826-11	s	CAPACITOR,CHIP CERAMIC 0.1MF
C1431	1-107-826-11	s	CAPACITOR,CHIP CERAMIC 0.1MF
C1432	1-107-826-11	s	CAPACITOR,CHIP CERAMIC 0.1MF
C1433	1-107-826-11	s	CAPACITOR,CHIP CERAMIC 0.1MF
C1434	1-107-826-11	s	CAPACITOR,CHIP CERAMIC 0.1MF
C1435	1-107-826-11	s	CAPACITOR,CHIP CERAMIC 0.1MF
C1436	1-107-826-11	s	CAPACITOR,CHIP CERAMIC 0.1MF
C1437	1-107-826-11	s	CAPACITOR,CHIP CERAMIC 0.1MF
C1438	1-107-826-11	s	CAPACITOR,CHIP CERAMIC 0.1MF
C1439	1-107-826-11	s	CAPACITOR,CHIP CERAMIC 0.1MF
C1440	1-107-826-11	s	CAPACITOR,CHIP CERAMIC 0.1MF
C1500	1-107-826-11	s	CAPACITOR,CHIP CERAMIC 0.1MF
C1501	1-107-826-11	s	CAPACITOR,CHIP CERAMIC 0.1MF
C1502	1-107-826-11	s	CAPACITOR,CHIP CERAMIC 0.1MF
C1503	1-107-826-11	s	CAPACITOR,CHIP CERAMIC 0.1MF
C1504	1-162-927-11	s	CAPACITOR,CERAMIC 100PF/50V CH
C1505	1-162-927-11	s	CAPACITOR,CERAMIC 100PF/50V CH
C1506	1-107-826-11	s	CAPACITOR,CHIP CERAMIC 0.1MF
C1507	1-107-826-11	s	CAPACITOR,CHIP CERAMIC 0.1MF
C1508	1-162-927-11	s	CAPACITOR,CERAMIC 100PF/50V CH
C1509	1-107-826-11	s	CAPACITOR,CHIP CERAMIC 0.1MF
C1510	1-107-826-11	s	CAPACITOR,CHIP CERAMIC 0.1MF
C1511	1-162-927-11	s	CAPACITOR,CERAMIC 100PF/50V CH
C1512	1-162-927-11	s	CAPACITOR,CERAMIC 100PF/50V CH
C1513 *2	deleted		
*1	1-107-826-11	s	CAPACITOR,CHIP CERAMIC 0.1MF
C1600	1-107-826-11	s	CAPACITOR,CHIP CERAMIC 0.1MF
C1601	1-107-826-11	s	CAPACITOR,CHIP CERAMIC 0.1MF
C1602	1-107-826-11	s	CAPACITOR,CHIP CERAMIC 0.1MF
C1603	1-107-826-11	s	CAPACITOR,CHIP CERAMIC 0.1MF
C1604	1-107-826-11	s	CAPACITOR,CHIP CERAMIC 0.1MF
C1605	1-107-826-11	s	CAPACITOR,CHIP CERAMIC 0.1MF
C1606	1-107-826-11	s	CAPACITOR,CHIP CERAMIC 0.1MF
C1607	1-107-826-11	s	CAPACITOR,CHIP CERAMIC 0.1MF
C1608 *2	1-107-826-11	s	CAPACITOR,CHIP CERAMIC 0.1MF
C1609	1-107-826-11	s	CAPACITOR,CHIP CERAMIC 0.1MF
C1611 *2	deleted		
*1	1-107-826-11	s	CAPACITOR,CHIP CERAMIC 0.1MF
C1612 *2	deleted		
*1	1-104-851-11	s	CAPACITOR,TANTALUM 10MF/10V
C1613	1-107-826-11	s	CAPACITOR,CHIP CERAMIC 0.1MF
C1700	1-107-826-11	s	CAPACITOR,CHIP CERAMIC 0.1MF
C1701	1-107-826-11	s	CAPACITOR,CHIP CERAMIC 0.1MF
C1704	1-107-826-11	s	CAPACITOR,CHIP CERAMIC 0.1MF
C1705 *2	1-100-159-91	s	CAP, CERAMIC 22MF B (SMD) 3216
*1	1-107-826-11	s	CAPACITOR,CHIP CERAMIC 0.1MF
C1706 *2	1-100-159-91	s	CAP, CERAMIC 22MF B (SMD) 3216
*1	1-107-826-11	s	CAPACITOR,CHIP CERAMIC 0.1MF
C1707	1-107-826-11	s	CAPACITOR,CHIP CERAMIC 0.1MF
C1708 *2	1-127-692-11	s	CAP, CHIP CERAMIC 10MF B 3216
*1	1-107-826-11	s	CAPACITOR,CHIP CERAMIC 0.1MF
C1709 *2	1-125-891-11	s	CAPACITOR CERAMIC 0.47MF/10V

(APR-52A BOARD for PLAYER)

Ref. No. or Q'ty	Part No.	SP	Description
C1710 *2	1-127-692-11	s	CAP, CHIP CERAMIC 10MF B 3216
*1	1-107-826-11	s	CAPACITOR,CHIP CERAMIC 0.1MF
C1711	1-126-390-11	s	CAPACITOR ELECT 22MF/6.3V(105)
C1712 *2	1-100-159-91	s	CAP, CERAMIC 22MF B (SMD) 3216
*1	1-126-391-11	s	CAPACITOR ELECT 47MF/6.3V(105)
C1713 *2	1-100-159-91	s	CAP, CERAMIC 22MF B (SMD) 3216
*1	1-126-391-11	s	CAPACITOR ELECT 47MF/6.3V(105)
C1714	1-126-390-11	s	CAPACITOR ELECT 22MF/6.3V(105)
C1715 *2	deleted		
*1	1-126-399-11	s	CAPACITOR ELECT 10MF/35V(CHIP)
C1717 *2	deleted		
*1	1-126-399-11	s	CAPACITOR ELECT 10MF/35V(CHIP)
C1718 *2	1-127-820-11	s	CAPACITOR, SQUARE CHIP 4.7MF
*1	1-107-686-11	s	CAPACITOR,TANTALUM 4.7MF/16V
C1719	1-126-396-11	s	CAPACITOR,ELECT 47MF/16V(CHIP)
C1722 *2	1-107-826-11	s	CAPACITOR,CHIP CERAMIC 0.1MF
C1726 *2	1-107-826-11	s	CAPACITOR,CHIP CERAMIC 0.1MF
C1728 *2	1-127-692-11	s	CAP, CHIP CERAMIC 10MF B 3216
C1733 *2	1-125-889-11	s	CAPACITOR, CERAMIC 2.2MF
*1	1-125-838-11	s	CAPACITOR, CERAMIC 2.2MF/6.3V
C1734 *2	1-100-159-91	s	CAP, CERAMIC 22MF B (SMD) 3216
C1735 *2	1-107-826-11	s	CAPACITOR,CHIP CERAMIC 0.1MF
C1800 *2	1-125-891-11	s	CAPACITOR CERAMIC 0.47MF/10V
*1	1-107-682-11	s	CAPACITOR,CHIP 1MF/16V (3216)
C1801 *2	1-125-891-11	s	CAPACITOR CERAMIC 0.47MF/10V
*1	1-107-682-11	s	CAPACITOR,CHIP 1MF/16V (3216)
C1802	1-162-927-11	s	CAPACITOR,CERAMIC 100PF/50V CH
C1803	1-162-927-11	s	CAPACITOR,CERAMIC 100PF/50V CH
C1804	1-107-826-11	s	CAPACITOR,CHIP CERAMIC 0.1MF
C1805	1-107-826-11	s	CAPACITOR,CHIP CERAMIC 0.1MF
CN1300	1-793-091-11	s	CONNECTOR, BOARD TO BOARD 60P
D104	8-719-820-41	s	DIODE 1SS302
D105	8-719-820-41	s	DIODE 1SS302
D204	8-719-820-41	s	DIODE 1SS302
D205	8-719-820-41	s	DIODE 1SS302
D304	8-719-820-41	s	DIODE 1SS302
D305	8-719-820-41	s	DIODE 1SS302
D404	8-719-820-41	s	DIODE 1SS302
D405	8-719-820-41	s	DIODE 1SS302
D500 *2	8-719-421-69	s	DIODE MA133
*1	8-719-068-64	s	DIODE MA143A-(TX).SO
D501 *2	8-719-421-69	s	DIODE MA133
*1	8-719-068-64	s	DIODE MA143A-(TX).SO
D502	8-719-801-48	s	DIODE 1SS193
D503	8-719-017-01	s	DIODE 02DZ4.3-TPH3
D600 *2	8-719-421-69	s	DIODE MA133
*1	8-719-068-64	s	DIODE MA143A-(TX).SO
D601 *2	8-719-421-69	s	DIODE MA133
*1	8-719-068-64	s	DIODE MA143A-(TX).SO
D602	8-719-801-48	s	DIODE 1SS193
D603	8-719-017-01	s	DIODE 02DZ4.3-TPH3
D700 *2	8-719-421-69	s	DIODE MA133
*1	8-719-068-64	s	DIODE MA143A-(TX).SO
D701 *2	8-719-421-69	s	DIODE MA133
*1	8-719-068-64	s	DIODE MA143A-(TX).SO
D702	8-719-801-48	s	DIODE 1SS193
D703	8-719-017-01	s	DIODE 02DZ4.3-TPH3
D800 *2	8-719-421-69	s	DIODE MA133
*1	8-719-068-64	s	DIODE MA143A-(TX).SO
D801 *2	8-719-421-69	s	DIODE MA133
*1	8-719-068-64	s	DIODE MA143A-(TX).SO

(APR-52A BOARD for PLAYER)

Ref. No. or Q'ty	Part No.	SP	Description	
D802	8-719-801-48	s	DIODE 1SS193	
D803	8-719-017-01	s	DIODE 02DZ4.3-TPH3	
D900 *2	8-719-421-69	s	DIODE MA133	
*1	8-719-068-64	s	DIODE MA143A-(TX).SO	
D901 *2	8-719-421-69	s	DIODE MA133	
*1	8-719-068-64	s	DIODE MA143A-(TX).SO	
D902	8-719-801-48	s	DIODE 1SS193	
D903	8-719-017-01	s	DIODE 02DZ4.3-TPH3	
D1000 *2	8-719-421-69	s	DIODE MA133	
*1	8-719-068-64	s	DIODE MA143A-(TX).SO	
D1001 *2	8-719-421-69	s	DIODE MA133	
*1	8-719-068-64	s	DIODE MA143A-(TX).SO	
D1002	8-719-801-48	s	DIODE 1SS193	
D1003	8-719-017-01	s	DIODE 02DZ4.3-TPH3	
D1700	8-719-820-41	s	DIODE 1SS302	
D1701 *2	8-719-975-40	s	DIODE RB411D	(RECTI)
*1	8-719-820-41	s	DIODE 1SS302	
D1704 *2	8-719-975-40	s	DIODE RB411D	(RECTI)
*1	8-719-941-04	s	DIODE SB007-03CP	
D1707 *2	8-719-975-40	s	DIODE RB411D	(RECTI)
*1	8-719-941-04	s	DIODE SB007-03CP	
D1708 *2	8-719-047-66	s	LED CL-190D-CD	
D1709 *2	8-719-047-66	s	LED CL-190D-CD	
D1710 *2	8-719-071-10	s	DIODE CL-191HR-CD-T	
D1711 *2	8-719-071-10	s	DIODE CL-191HR-CD-T	
E101	1-535-877-22	s	CHIP,CHECKER (TEST POINT)	
E201	1-535-877-22	s	CHIP,CHECKER (TEST POINT)	
E301	1-535-877-22	s	CHIP,CHECKER (TEST POINT)	
E401	1-535-877-22	s	CHIP,CHECKER (TEST POINT)	
E500	1-535-877-22	s	CHIP,CHECKER (TEST POINT)	
E600	1-535-877-22	s	CHIP,CHECKER (TEST POINT)	
E700	1-535-877-22	s	CHIP,CHECKER (TEST POINT)	
E800	1-535-877-22	s	CHIP,CHECKER (TEST POINT)	
E900	1-535-877-22	s	CHIP,CHECKER (TEST POINT)	
E1000	1-535-877-22	s	CHIP,CHECKER (TEST POINT)	
F1700 ⚠	1-533-999-11	s	FUSE CHIP 2A/125V (6125)	
F1701 ⚠	1-576-270-11	s	FUSE CHIP 4A/125V (6125)	
F1702 ⚠	1-533-999-11	s	FUSE CHIP 2A/125V (6125)	
F1703 ⚠	1-533-999-11	s	FUSE CHIP 2A/125V (6125)	
IC100	8-759-422-21	s	IC NJM4580VTE2	
IC101	8-759-422-21	s	IC NJM4580VTE2	
IC106	8-759-194-97	s	IC NJM4560M-D(TE2)	
IC107	8-759-711-85	s	IC NJM4580E-D	
IC108 *2	8-759-638-81	s	IC AK5393VS-E2	
*1	8-759-578-44	s	IC AK5392-VS-E2	
IC206	8-759-194-97	s	IC NJM4560M-D(TE2)	
IC207	8-759-711-85	s	IC NJM4580E-D	
IC300	8-759-422-21	s	IC NJM4580VTE2	
IC301	8-759-422-21	s	IC NJM4580VTE2	
IC306	8-759-194-97	s	IC NJM4560M-D(TE2)	
IC307	8-759-711-85	s	IC NJM4580E-D	
IC308 *2	8-759-638-81	s	IC AK5393VS-E2	
*1	8-759-578-44	s	IC AK5392-VS-E2	
IC406	8-759-194-97	s	IC NJM4560M-D(TE2)	
IC407	8-759-711-85	s	IC NJM4580E-D	
IC500	8-759-481-08	s	IC TC7SET02FU	(TE85R)
IC501	8-759-638-82	s	IC SM5847AF	
IC502 *2	8-759-196-97	s	IC TC7SH32FU	(TE85R)
IC503	6-700-152-01	s	IC SM5865CM-E2	
IC504	8-759-711-85	s	IC NJM4580E-D	

(APR-52A BOARD for PLAYER)

Ref. No. or Q'ty	Part No.	SP	Description	
IC505	8-759-711-85	s	IC NJM4580E-D	
IC506	8-759-194-97	s	IC NJM4560M-D(TE2)	
IC507	8-759-194-97	s	IC NJM4560M-D(TE2)	
IC508	8-759-194-97	s	IC NJM4560M-D(TE2)	
IC509	8-759-700-96	s	IC NJM5534M	
IC511	8-759-422-21	s	IC NJM4580VTE2	
IC512	8-759-700-96	s	IC NJM5534M	
IC514	8-759-700-96	s	IC NJM5534M	
IC515	8-759-700-96	s	IC NJM5534M	
IC603	6-700-152-01	s	IC SM5865CM-E2	
IC604	8-759-711-85	s	IC NJM4580E-D	
IC605	8-759-711-85	s	IC NJM4580E-D	
IC606	8-759-194-97	s	IC NJM4560M-D(TE2)	
IC607	8-759-194-97	s	IC NJM4560M-D(TE2)	
IC608	8-759-194-97	s	IC NJM4560M-D(TE2)	
IC609	8-759-700-96	s	IC NJM5534M	
IC611	8-759-422-21	s	IC NJM4580VTE2	
IC612	8-759-700-96	s	IC NJM5534M	
IC614	8-759-700-96	s	IC NJM5534M	
IC615	8-759-700-96	s	IC NJM5534M	
IC700	8-759-481-08	s	IC TC7SET02FU	(TE85R)
IC701	8-759-638-82	s	IC SM5847AF	
IC702 *2	8-759-196-97	s	IC TC7SH32FU	(TE85R)
IC703	6-700-152-01	s	IC SM5865CM-E2	
IC704	8-759-711-85	s	IC NJM4580E-D	
IC705	8-759-711-85	s	IC NJM4580E-D	
IC706	8-759-194-97	s	IC NJM4560M-D(TE2)	
IC707	8-759-194-97	s	IC NJM4560M-D(TE2)	
IC708	8-759-194-97	s	IC NJM4560M-D(TE2)	
IC709	8-759-700-96	s	IC NJM5534M	
IC711	8-759-422-21	s	IC NJM4580VTE2	
IC712	8-759-700-96	s	IC NJM5534M	
IC714	8-759-700-96	s	IC NJM5534M	
IC715	8-759-700-96	s	IC NJM5534M	
IC803	6-700-152-01	s	IC SM5865CM-E2	
IC804	8-759-711-85	s	IC NJM4580E-D	
IC805	8-759-711-85	s	IC NJM4580E-D	
IC806	8-759-194-97	s	IC NJM4560M-D(TE2)	
IC807	8-759-194-97	s	IC NJM4560M-D(TE2)	
IC808	8-759-194-97	s	IC NJM4560M-D(TE2)	
IC809	8-759-700-96	s	IC NJM5534M	
IC811	8-759-422-21	s	IC NJM4580VTE2	
IC812	8-759-700-96	s	IC NJM5534M	
IC814	8-759-700-96	s	IC NJM5534M	
IC815	8-759-700-96	s	IC NJM5534M	
IC900	8-759-481-08	s	IC TC7SET02FU	(TE85R)
IC901	8-759-638-82	s	IC SM5847AF	
IC902 *2	8-759-196-97	s	IC TC7SH32FU	(TE85R)
IC903	6-700-152-01	s	IC SM5865CM-E2	
IC904	8-759-711-85	s	IC NJM4580E-D	
IC905	8-759-711-85	s	IC NJM4580E-D	
IC906	8-759-194-97	s	IC NJM4560M-D(TE2)	
IC907	8-759-194-97	s	IC NJM4560M-D(TE2)	
IC908	8-759-194-97	s	IC NJM4560M-D(TE2)	
IC909	8-759-700-96	s	IC NJM5534M	
IC911	8-759-422-21	s	IC NJM4580VTE2	
IC912	8-759-700-96	s	IC NJM5534M	
IC914	8-759-700-96	s	IC NJM5534M	
IC915	8-759-700-96	s	IC NJM5534M	

(APR-52A BOARD for PLAYER)

Ref. No. or Q'ty	Part No.	SP	Description
IC1003	6-700-152-01	s	IC SM5865CM-E2
IC1004	8-759-711-85	s	IC NJM4580E-D
IC1005	8-759-711-85	s	IC NJM4580E-D
IC1006	8-759-194-97	s	IC NJM4560M-D(TE2)
IC1007	8-759-194-97	s	IC NJM4560M-D(TE2)
IC1008	8-759-194-97	s	IC NJM4560M-D(TE2)
IC1009	8-759-700-96	s	IC NJM5534M
IC1011	8-759-422-21	s	IC NJM4580VTE2
IC1012	8-759-700-96	s	IC NJM5534M
IC1014	8-759-700-96	s	IC NJM5534M
IC1015	8-759-700-96	s	IC NJM5534M
IC1100	8-759-549-15	s	IC SN74LV245APWR
IC1120	8-759-524-10	s	IC TC74VHC157FT (EL)
IC1121	8-759-524-10	s	IC TC74VHC157FT (EL)
IC1202	8-759-524-10	s	IC TC74VHC157FT (EL)
IC1203	8-759-524-10	s	IC TC74VHC157FT (EL)
IC1204*2	6-704-659-01	s	IC AD1896AYRSRL
*1	6-701-388-01	s	IC AD1896YRSRL
IC1205*2	6-704-659-01	s	IC AD1896AYRSRL
*1	6-701-388-01	s	IC AD1896YRSRL
IC1211	8-759-524-49	s	IC TC74VHC540FT (EL)
IC1216	8-759-523-94	s	IC TC74VHC32FT(EL)
IC1217	8-759-523-81	s	IC TC74VHC08FT(EL)
IC1218	8-759-530-31	s	IC TC74VHC4040FT(EL)
IC1219	8-759-523-95	s	IC TC74VHC74FT(EL)
IC1220*2	deleted		
*1	8-759-271-86	s	IC TC7SH04FU
IC1400	8-759-549-15	s	IC SN74LV245APWR
IC1401	8-759-549-15	s	IC SN74LV245APWR
IC1402	8-759-549-15	s	IC SN74LV245APWR
IC1403	8-759-549-15	s	IC SN74LV245APWR
IC1404	8-759-549-15	s	IC SN74LV245APWR
IC1405	8-759-549-15	s	IC SN74LV245APWR
IC1406	8-759-524-09	s	IC TC74VHC153FT (EL)
IC1407	8-759-524-09	s	IC TC74VHC153FT (EL)
IC1408	8-759-524-09	s	IC TC74VHC153FT (EL)
IC1409	8-759-524-09	s	IC TC74VHC153FT (EL)
IC1410	8-759-524-09	s	IC TC74VHC153FT (EL)
IC1411	8-759-524-09	s	IC TC74VHC153FT (EL)
IC1412	8-759-524-09	s	IC TC74VHC153FT (EL)
IC1413	8-759-524-09	s	IC TC74VHC153FT (EL)
IC1414*2	deleted		
*1	8-759-196-96	s	IC TC7SH08FU (TE85R)
IC1415	8-759-524-09	s	IC TC74VHC153FT (EL)
IC1416	8-759-524-09	s	IC TC74VHC153FT (EL)
IC1417	8-759-549-15	s	IC SN74LV245APWR
IC1418	8-759-549-15	s	IC SN74LV245APWR
IC1419	8-759-524-09	s	IC TC74VHC153FT (EL)
IC1420	8-759-524-09	s	IC TC74VHC153FT (EL)
IC1423	8-759-549-15	s	IC SN74LV245APWR
IC1425	8-759-656-14	o	IC CXD9102AR
IC1426*2	deleted		
*1	8-759-196-96	s	IC TC7SH08FU (TE85R)
IC1427	8-759-549-01	s	IC SN74LV125APWR
IC1428	8-759-196-96	s	IC TC7SH08FU (TE85R)
IC1429	8-759-524-49	s	IC TC74VHC540FT (EL)
IC1430*2	deleted		
*1	8-759-196-96	s	IC TC7SH08FU (TE85R)
IC1431	8-759-549-15	s	IC SN74LV245APWR
IC1432*2	deleted		
*1	8-759-196-96	s	IC TC7SH08FU (TE85R)

(APR-52A BOARD for PLAYER)

Ref. No. or Q'ty	Part No.	SP	Description
IC1433*2	deleted		
*1	8-759-196-96	s	IC TC7SH08FU (TE85R)
IC1434	8-759-524-10	s	IC TC74VHC157FT (EL)
IC1435*2	deleted		
*1	8-759-196-96	s	IC TC7SH08FU (TE85R)
IC1436	8-759-524-10	s	IC TC74VHC157FT (EL)
IC1437	8-759-524-27	s	IC TC74VHC244FT(EL)
IC1438	8-759-524-09	s	IC TC74VHC153FT (EL)
IC1439	8-759-524-09	s	IC TC74VHC153FT (EL)
IC1500	8-759-549-15	s	IC SN74LV245APWR
IC1501	8-759-549-15	s	IC SN74LV245APWR
IC1502	8-759-549-15	s	IC SN74LV245APWR
IC1503	8-759-549-15	s	IC SN74LV245APWR
IC1505	8-759-524-07	s	IC TC74VHC138FT(EL)
IC1506	8-752-392-03	s	IC CXD1095BR
IC1507	8-752-392-03	s	IC CXD1095BR
IC1508	8-752-392-03	s	IC CXD1095BR
IC1509	8-759-524-07	s	IC TC74VHC138FT(EL)
IC1510*2	deleted		
*1	8-759-491-51	s	IC TC74VHCT245AFT(EL)
IC1600	8-759-392-77	s	IC SN74LVC245APW (E20)
IC1601	8-759-392-77	s	IC SN74LVC245APW (E20)
IC1602	8-759-392-77	s	IC SN74LVC245APW (E20)
IC1603	8-759-524-09	s	IC TC74VHC153FT (EL)
IC1604	8-759-524-09	s	IC TC74VHC153FT (EL)
IC1605	8-759-524-09	s	IC TC74VHC153FT (EL)
IC1606	8-759-392-77	s	IC SN74LVC245APW (E20)
IC1607	8-759-392-77	s	IC SN74LVC245APW (E20)
IC1608	8-759-523-95	s	IC TC74VHC74FT(EL)
IC1609	8-759-196-96	s	IC TC7SH08FU (TE85R)
IC1610	8-759-271-86	s	IC TC7SH04FU
IC1611	8-759-271-86	s	IC TC7SH04FU
IC1612	8-759-523-95	s	IC TC74VHC74FT(EL)
IC1613*2	8-759-675-47	s	IC SN74LVC04APWR
*1	8-759-392-77	s	IC SN74LVC245APW (E20)
IC1614	8-759-523-95	s	IC TC74VHC74FT(EL)
IC1615*2	deleted		
*1	8-759-196-96	s	IC TC7SH08FU (TE85R)
IC1616	8-759-196-96	s	IC TC7SH08FU (TE85R)
IC1617	8-759-271-86	s	IC TC7SH04FU
IC1618*2	deleted		
*1	8-759-523-97	s	IC TC74VHC123AFT(EL)
IC1700*2	deleted		
*1	8-759-539-89	s	IC LM2990SX-5.0
IC1701*2	8-759-642-22	s	IC UPC29M05T-E2
*1	8-759-539-90	s	IC LM2940SX-5.0
IC1702*2	6-703-188-01	s	IC S-80827CNNB-B8MT2G
*1	8-759-542-87	s	IC S-80827ANUP-EDQ-T2
IC1703*2	6-701-871-11	s	IC TK72150MCL-G
IC1704*2	6-702-519-01	s	IC S-80840CNNB-B8ZT2G
*1	8-759-542-91	s	IC S-80840ANUP-ED4-T2
IC1705*2	8-759-523-83	s	IC TC74VHC11FT(EL)
IC1707*2	6-703-188-01	s	IC S-80827CNNB-B8MT2G
*1	8-759-542-87	s	IC S-80827ANUP-EDQ-T2
IC1712*2	8-759-196-93	s	IC TC7SH00FU-TE85R
IC1713*2	8-759-642-22	s	IC UPC29M05T-E2
IC1732*2	8-759-523-97	s	IC TC74VHC123AFT(EL)
IC1800	8-759-523-02	s	IC TC74HC4053AFT(EL)
IC1801	8-759-422-21	s	IC NJM4580VTE2
IC1802	8-759-422-21	s	IC NJM4580VTE2
IC1803*2	8-759-453-97	s	IC TC7SET08FU-TE85R
*1	8-759-485-79	s	IC TC7SET08FU (TE85L)

(APR-52A BOARD for PLAYER)

Ref. No. or Q'ty	Part No.	SP	Description
IC1804 *2	8-759-453-97	s	IC TC7SET08FU-TE85R
*1	8-759-485-79	s	IC TC7SET08FU (TE85L)
L1700 *2	1-416-345-11	s	COIL, CHOKE 22UH
*1	1-424-641-11	s	COIL, CHOKE 22UH
Q101 *2	8-729-928-27	s	TRANSISTOR DTA144EE
*1	8-729-140-63	s	TRANSISTOR 2SA1611-M5M6
Q103	8-729-012-35	s	TRANSISTOR 2SK711-BL
Q104 *2	8-729-928-72	s	TRANSISTOR DTA114TE
Q201 *2	8-729-928-27	s	TRANSISTOR DTA144EE
*1	8-729-140-63	s	TRANSISTOR 2SA1611-M5M6
Q203	8-729-012-35	s	TRANSISTOR 2SK711-BL
Q204 *2	8-729-928-72	s	TRANSISTOR DTA114TE
Q301 *2	8-729-928-27	s	TRANSISTOR DTA144EE
*1	8-729-140-63	s	TRANSISTOR 2SA1611-M5M6
Q303	8-729-012-35	s	TRANSISTOR 2SK711-BL
Q304 *2	8-729-928-72	s	TRANSISTOR DTA114TE
Q401 *2	8-729-928-27	s	TRANSISTOR DTA144EE
*1	8-729-140-63	s	TRANSISTOR 2SA1611-M5M6
Q403	8-729-012-35	s	TRANSISTOR 2SK711-BL
Q404 *2	8-729-928-72	s	TRANSISTOR DTA114TE
Q500	8-729-012-35	s	TRANSISTOR 2SK711-BL
Q501 *2	8-729-928-27	s	TRANSISTOR DTA144EE
*1	8-729-140-63	s	TRANSISTOR 2SA1611-M5M6
Q502	8-729-159-65	s	TRANSISTOR 2SD596-DV5
Q504 *2	8-729-928-72	s	TRANSISTOR DTA114TE
Q505 *2	8-729-209-07	s	TRANSISTOR 2SC4213-B
Q600	8-729-012-35	s	TRANSISTOR 2SK711-BL
Q601 *2	8-729-928-27	s	TRANSISTOR DTA144EE
*1	8-729-140-63	s	TRANSISTOR 2SA1611-M5M6
Q602	8-729-159-65	s	TRANSISTOR 2SD596-DV5
Q604 *2	8-729-928-72	s	TRANSISTOR DTA114TE
Q605 *2	8-729-209-07	s	TRANSISTOR 2SC4213-B
Q700	8-729-012-35	s	TRANSISTOR 2SK711-BL
Q701 *2	8-729-928-27	s	TRANSISTOR DTA144EE
*1	8-729-140-63	s	TRANSISTOR 2SA1611-M5M6
Q702	8-729-159-65	s	TRANSISTOR 2SD596-DV5
Q704 *2	8-729-928-72	s	TRANSISTOR DTA114TE
Q705 *2	8-729-209-07	s	TRANSISTOR 2SC4213-B
Q800	8-729-012-35	s	TRANSISTOR 2SK711-BL
Q801 *2	8-729-928-27	s	TRANSISTOR DTA144EE
*1	8-729-140-63	s	TRANSISTOR 2SA1611-M5M6
Q802	8-729-159-65	s	TRANSISTOR 2SD596-DV5
Q804 *2	8-729-928-72	s	TRANSISTOR DTA114TE
Q805 *2	8-729-209-07	s	TRANSISTOR 2SC4213-B
Q900	8-729-012-35	s	TRANSISTOR 2SK711-BL
Q901 *2	8-729-928-27	s	TRANSISTOR DTA144EE
*1	8-729-140-63	s	TRANSISTOR 2SA1611-M5M6
Q902	8-729-159-65	s	TRANSISTOR 2SD596-DV5
Q904 *2	8-729-928-72	s	TRANSISTOR DTA114TE
Q905 *2	8-729-209-07	s	TRANSISTOR 2SC4213-B
Q1000	8-729-012-35	s	TRANSISTOR 2SK711-BL
Q1001 *2	8-729-928-27	s	TRANSISTOR DTA144EE
*1	8-729-140-63	s	TRANSISTOR 2SA1611-M5M6
Q1002	8-729-159-65	s	TRANSISTOR 2SD596-DV5
Q1004 *2	8-729-928-72	s	TRANSISTOR DTA114TE
Q1005 *2	8-729-209-07	s	TRANSISTOR 2SC4213-B
Q1400 *2	8-729-928-81	s	TRANSISTOR DTC144EE
*1	8-729-029-14	s	TRANSISTOR DTC144EUA-T106
Q1700 *2	8-729-928-54	s	TRANSISTOR DTA123JE
*1	8-729-028-81	s	TRANSISTOR DTA123JUA-T106

(APR-52A BOARD for PLAYER)

Ref. No. or Q'ty	Part No.	SP	Description
Q1701 *2	8-729-929-08	s	TRANSISTOR DTC123JE
*1	8-729-029-04	s	TRANSISTOR DTC123JUA-T106
Q1702 *2	8-729-929-08	s	TRANSISTOR DTC123JE
*1	8-729-029-04	s	TRANSISTOR DTC123JUA-T106
Q1703 *2	8-729-929-08	s	TRANSISTOR DTC123JE
*1	8-729-029-04	s	TRANSISTOR DTC123JUA-T106
Q1704 *2	deleted		
*1	8-729-029-04	s	TRANSISTOR DTC123JUA-T106
Q1705 *2	8-729-928-27	s	TRANSISTOR DTA144EE
*1	8-729-028-81	s	TRANSISTOR DTA123JUA-T106
Q1706 *2	deleted		
*1	8-729-028-81	s	TRANSISTOR DTA123JUA-T106
Q1707 *2	8-729-928-81	s	TRANSISTOR DTC144EE
Q1800 *2	8-729-021-09	s	TRANSISTOR RN4904(TE85R)
*1	8-729-029-14	s	TRANSISTOR DTC144EUA-T106
Q1801 *2	8-729-021-09	s	TRANSISTOR RN4904(TE85R)
*1	8-729-029-14	s	TRANSISTOR DTC144EUA-T106
Q1802 *2	8-729-928-27	s	TRANSISTOR DTA144EE
*1	8-729-028-91	s	TRANSISTOR DTA144EUA-T106
Q1803 *2	8-729-928-27	s	TRANSISTOR DTA144EE
*1	8-729-028-91	s	TRANSISTOR DTA144EUA-T106
Q1804	8-729-012-35	s	TRANSISTOR 2SK711-BL
Q1805	8-729-012-35	s	TRANSISTOR 2SK711-BL
R116	1-218-726-11	s	RESISTOR CHIP 27K 1/16W (1608)
R117	1-218-726-11	s	RESISTOR CHIP 27K 1/16W (1608)
R118	1-218-726-11	s	RESISTOR CHIP 27K 1/16W (1608)
R119	1-218-726-11	s	RESISTOR CHIP 27K 1/16W (1608)
R121	1-218-718-11	s	RESISTOR CHIP 12K 1/16W (1608)
R122	1-218-718-11	s	RESISTOR CHIP 12K 1/16W (1608)
R125	1-218-718-11	s	RESISTOR CHIP 12K 1/16W (1608)
R126	1-218-718-11	s	RESISTOR CHIP 12K 1/16W (1608)
R148 *2	1-218-752-11	s	RESISTOR,CHIP 330K 1/16W(1608)
*1	1-218-692-11	s	RESISTOR,CHIP 1.0K 1/16W(1608)
R149 *2	1-218-752-11	s	RESISTOR,CHIP 330K 1/16W(1608)
*1	1-218-706-11	s	RESISTOR,CHIP 3.9K 1/16W(1608)
R151 *2	1-218-736-11	s	RESISTOR,CHIP 68K 1/16W(1608)
*1	1-218-724-11	s	RESISTOR,CHIP 22K 1/16W(1608)
R153	1-218-696-11	s	RESISTOR,CHIP 1.5K 1/16W(1608)
R152 *2	deleted		
*1	1-218-738-11	s	RESISTOR,CHIP 82K 1/16W(1608)
R157	1-216-864-11	s	CONDUCTOR, CHIP (1608)
R158	1-218-716-11	s	RESISTOR,CHIP 10K 1/16W(1608)
R159	1-218-692-11	s	RESISTOR,CHIP 1.0K 1/16W(1608)
R160	1-218-700-11	s	RESISTOR,CHIP 2.2K 1/16W(1608)
R161	1-216-857-11	s	RESISTOR,CHIP 1M 1/10W(1608)
R164	1-218-690-11	s	RESISTOR,CHIP 820 1/16W (1608)
R165	1-218-690-11	s	RESISTOR,CHIP 820 1/16W (1608)
R166	1-218-708-11	s	RESISTOR,CHIP 4.7K 1/16W(1608)
R167	1-218-662-11	s	RESISTOR,CHIP 56 1/16W (1608)
R168	1-218-704-11	s	RESISTOR,CHIP 3.3K 1/16W(1608)
R169	1-218-684-11	s	RESISTOR,CHIP 470 1/16W (1608)
R170	1-218-696-11	s	RESISTOR,CHIP 1.5K 1/16W(1608)
R172	1-218-692-11	s	RESISTOR,CHIP 1.0K 1/16W(1608)
R173	1-218-692-11	s	RESISTOR,CHIP 1.0K 1/16W(1608)
R174	1-218-662-11	s	RESISTOR,CHIP 56 1/16W (1608)
R175	1-218-662-11	s	RESISTOR,CHIP 56 1/16W (1608)
R176	1-218-716-11	s	RESISTOR,CHIP 10K 1/16W(1608)
R177	1-218-716-11	s	RESISTOR,CHIP 10K 1/16W(1608)
R178	1-218-732-11	s	RESISTOR,CHIP 47K 1/16W(1608)
R179	1-218-732-11	s	RESISTOR,CHIP 47K 1/16W(1608)
R180	1-218-716-11	s	RESISTOR,CHIP 10K 1/16W(1608)

(APR-52A BOARD for PLAYER)

Ref. No. or Q'ty	Part No.	SP	Description
R181	1-216-864-11	s	CONDUCTOR, CHIP (1608)
R182	1-216-864-11	s	CONDUCTOR, CHIP (1608)
R184	1-218-668-11	s	RESISTOR,CHIP 100 1/16W (1608)
R185	1-218-713-11	s	RESISTOR,METAL 7.5K 1/16W
R186	1-218-713-11	s	RESISTOR,METAL 7.5K 1/16W
R187	1-218-656-11	s	RESISTOR,CHIP 33 1/16W (1608)
R240 *2	1-218-752-11	s	RESISTOR,CHIP 330K 1/16W(1608)
*1	1-218-692-11	s	RESISTOR,CHIP 1.0K 1/16W(1608)
R241 *2	1-218-752-11	s	RESISTOR,CHIP 330K 1/16W(1608)
*1	1-218-706-11	s	RESISTOR,CHIP 3.9K 1/16W(1608)
R243 *2	1-218-736-11	s	RESISTOR,CHIP 68K 1/16W(1608)
*1	1-218-724-11	s	RESISTOR,CHIP 22K 1/16W(1608)
R244 *2	deleted		
*1	1-218-738-11	s	RESISTOR,CHIP 82K 1/16W(1608)
R245	1-218-696-11	s	RESISTOR,CHIP 1.5K 1/16W(1608)
R250	1-218-716-11	s	RESISTOR,CHIP 10K 1/16W(1608)
R251	1-218-692-11	s	RESISTOR,CHIP 1.0K 1/16W(1608)
R252	1-218-700-11	s	RESISTOR,CHIP 2.2K 1/16W(1608)
R253	1-216-857-11	s	RESISTOR,CHIP 1M 1/10W(1608)
R255	1-218-690-11	s	RESISTOR,CHIP 820 1/16W (1608)
R256	1-218-690-11	s	RESISTOR,CHIP 820 1/16W (1608)
R257	1-216-864-11	s	CONDUCTOR, CHIP (1608)
R258	1-218-704-11	s	RESISTOR,CHIP 3.3K 1/16W(1608)
R259	1-218-684-11	s	RESISTOR,CHIP 470 1/16W (1608)
R260	1-218-696-11	s	RESISTOR,CHIP 1.5K 1/16W(1608)
R261	1-218-662-11	s	RESISTOR,CHIP 56 1/16W (1608)
R262	1-218-708-11	s	RESISTOR,CHIP 4.7K 1/16W(1608)
R264	1-218-692-11	s	RESISTOR,CHIP 1.0K 1/16W(1608)
R265	1-218-692-11	s	RESISTOR,CHIP 1.0K 1/16W(1608)
R266	1-218-662-11	s	RESISTOR,CHIP 56 1/16W (1608)
R267	1-218-662-11	s	RESISTOR,CHIP 56 1/16W (1608)
R268	1-218-716-11	s	RESISTOR,CHIP 10K 1/16W(1608)
R269	1-218-716-11	s	RESISTOR,CHIP 10K 1/16W(1608)
R270	1-218-732-11	s	RESISTOR,CHIP 47K 1/16W(1608)
R271	1-218-732-11	s	RESISTOR,CHIP 47K 1/16W(1608)
R284	1-218-668-11	s	RESISTOR,CHIP 100 1/16W (1608)
R285	1-218-713-11	s	RESISTOR,METAL 7.5K 1/16W
R286	1-218-713-11	s	RESISTOR,METAL 7.5K 1/16W
R287	1-218-656-11	s	RESISTOR,CHIP 33 1/16W (1608)
R316	1-218-726-11	s	RESISTOR CHIP 27K 1/16W (1608)
R317	1-218-726-11	s	RESISTOR CHIP 27K 1/16W (1608)
R318	1-218-726-11	s	RESISTOR CHIP 27K 1/16W (1608)
R319	1-218-726-11	s	RESISTOR CHIP 27K 1/16W (1608)
R321	1-218-718-11	s	RESISTOR CHIP 12K 1/16W (1608)
R322	1-218-718-11	s	RESISTOR CHIP 12K 1/16W (1608)
R325	1-218-718-11	s	RESISTOR CHIP 12K 1/16W (1608)
R326	1-218-718-11	s	RESISTOR CHIP 12K 1/16W (1608)
R348 *2	1-218-752-11	s	RESISTOR,CHIP 330K 1/16W(1608)
*1	1-218-692-11	s	RESISTOR,CHIP 1.0K 1/16W(1608)
R349 *2	1-218-752-11	s	RESISTOR,CHIP 330K 1/16W(1608)
*1	1-218-706-11	s	RESISTOR,CHIP 3.9K 1/16W(1608)
R351 *2	1-218-736-11	s	RESISTOR,CHIP 68K 1/16W(1608)
*1	1-218-724-11	s	RESISTOR,CHIP 22K 1/16W(1608)
R352 *2	deleted		
*1	1-218-738-11	s	RESISTOR,CHIP 82K 1/16W(1608)
R357	1-216-864-11	s	CONDUCTOR, CHIP (1608)
R358	1-218-716-11	s	RESISTOR,CHIP 10K 1/16W(1608)
R359	1-218-692-11	s	RESISTOR,CHIP 1.0K 1/16W(1608)
R360	1-218-700-11	s	RESISTOR,CHIP 2.2K 1/16W(1608)
R361	1-216-857-11	s	RESISTOR,CHIP 1M 1/10W(1608)

(APR-52A BOARD for PLAYER)

Ref. No. or Q'ty	Part No.	SP	Description
R362	1-218-696-11	s	RESISTOR,CHIP 1.5K 1/16W(1608)
R364	1-218-690-11	s	RESISTOR,CHIP 820 1/16W (1608)
R365	1-218-690-11	s	RESISTOR,CHIP 820 1/16W (1608)
R366	1-218-708-11	s	RESISTOR,CHIP 4.7K 1/16W(1608)
R367	1-218-662-11	s	RESISTOR,CHIP 56 1/16W (1608)
R368	1-218-704-11	s	RESISTOR,CHIP 3.3K 1/16W(1608)
R369	1-218-684-11	s	RESISTOR,CHIP 470 1/16W (1608)
R370	1-218-696-11	s	RESISTOR,CHIP 1.5K 1/16W(1608)
R372	1-218-692-11	s	RESISTOR,CHIP 1.0K 1/16W(1608)
R373	1-218-692-11	s	RESISTOR,CHIP 1.0K 1/16W(1608)
R374	1-218-662-11	s	RESISTOR,CHIP 56 1/16W (1608)
R375	1-218-662-11	s	RESISTOR,CHIP 56 1/16W (1608)
R376	1-218-716-11	s	RESISTOR,CHIP 10K 1/16W(1608)
R377	1-218-716-11	s	RESISTOR,CHIP 10K 1/16W(1608)
R378	1-218-732-11	s	RESISTOR,CHIP 47K 1/16W(1608)
R379	1-218-732-11	s	RESISTOR,CHIP 47K 1/16W(1608)
R380	1-218-716-11	s	RESISTOR,CHIP 10K 1/16W(1608)
R381	1-216-864-11	s	CONDUCTOR, CHIP (1608)
R382	1-216-864-11	s	CONDUCTOR, CHIP (1608)
R384	1-218-668-11	s	RESISTOR,CHIP 100 1/16W (1608)
R385	1-218-713-11	s	RESISTOR,METAL 7.5K 1/16W
R387	1-218-713-11	s	RESISTOR,METAL 7.5K 1/16W
R388	1-218-656-11	s	RESISTOR,CHIP 33 1/16W (1608)
R435	1-218-696-11	s	RESISTOR,CHIP 1.5K 1/16W(1608)
R440 *2	1-218-752-11	s	RESISTOR,CHIP 330K 1/16W(1608)
*1	1-218-692-11	s	RESISTOR,CHIP 1.0K 1/16W(1608)
R441 *2	1-218-752-11	s	RESISTOR,CHIP 330K 1/16W(1608)
*1	1-218-706-11	s	RESISTOR,CHIP 3.9K 1/16W(1608)
R443 *2	1-218-736-11	s	RESISTOR,CHIP 68K 1/16W(1608)
*1	1-218-724-11	s	RESISTOR,CHIP 22K 1/16W(1608)
R444 *2	deleted		
*1	1-218-738-11	s	RESISTOR,CHIP 82K 1/16W(1608)
R449	1-216-864-11	s	CONDUCTOR, CHIP (1608)
R450	1-218-716-11	s	RESISTOR,CHIP 10K 1/16W(1608)
R451	1-218-692-11	s	RESISTOR,CHIP 1.0K 1/16W(1608)
R452	1-218-700-11	s	RESISTOR,CHIP 2.2K 1/16W(1608)
R453	1-216-857-11	s	RESISTOR,CHIP 1M 1/10W(1608)
R455	1-218-690-11	s	RESISTOR,CHIP 820 1/16W (1608)
R456	1-218-690-11	s	RESISTOR,CHIP 820 1/16W (1608)
R458	1-218-704-11	s	RESISTOR,CHIP 3.3K 1/16W(1608)
R459	1-218-684-11	s	RESISTOR,CHIP 470 1/16W (1608)
R460	1-218-696-11	s	RESISTOR,CHIP 1.5K 1/16W(1608)
R461	1-218-662-11	s	RESISTOR,CHIP 56 1/16W (1608)
R462	1-218-708-11	s	RESISTOR,CHIP 4.7K 1/16W(1608)
R464	1-218-692-11	s	RESISTOR,CHIP 1.0K 1/16W(1608)
R465	1-218-692-11	s	RESISTOR,CHIP 1.0K 1/16W(1608)
R466	1-218-662-11	s	RESISTOR,CHIP 56 1/16W (1608)
R467	1-218-662-11	s	RESISTOR,CHIP 56 1/16W (1608)
R468	1-218-716-11	s	RESISTOR,CHIP 10K 1/16W(1608)
R469	1-218-716-11	s	RESISTOR,CHIP 10K 1/16W(1608)
R470	1-218-732-11	s	RESISTOR,CHIP 47K 1/16W(1608)
R471	1-218-732-11	s	RESISTOR,CHIP 47K 1/16W(1608)
R484	1-218-668-11	s	RESISTOR,CHIP 100 1/16W (1608)
R485	1-218-713-11	s	RESISTOR,METAL 7.5K 1/16W
R487	1-218-713-11	s	RESISTOR,METAL 7.5K 1/16W
R488	1-218-656-11	s	RESISTOR,CHIP 33 1/16W (1608)
R500	1-218-652-11	s	RESISTOR,CHIP 22 1/10W (1608)
R501	1-218-660-91	s	RESISTOR,CHIP 47 1/16W (1608)
R502	1-218-692-11	s	RESISTOR,CHIP 1.0K 1/16W(1608)

(APR-52A BOARD for PLAYER)

Ref. No. or Q'ty	Part No.	SP	Description
R503	1-218-692-11	s	RESISTOR,CHIP 1.0K 1/16W(1608)
R504	1-218-668-11	s	RESISTOR,CHIP 100 1/16W (1608)
R505	1-216-864-11	s	CONDUCTOR, CHIP (1608)
R506	1-216-864-11	s	CONDUCTOR, CHIP (1608)
R510 *2	1-218-700-11	s	RESISTOR,CHIP 2.2K 1/16W(1608)
*1	1-216-659-11	s	RESISTOR,CHIP 2.2K 1/10W(2012)
R511 *2	1-218-700-11	s	RESISTOR,CHIP 2.2K 1/16W(1608)
*1	1-216-659-11	s	RESISTOR,CHIP 2.2K 1/10W(2012)
R513 *2	1-216-864-11	s	CONDUCTOR, CHIP (1608)
R514 *2	1-218-680-11	s	RESISTOR,CHIP 330 1/16W(1608)
R515	1-218-708-11	s	RESISTOR,CHIP 4.7K 1/16W(1608)
R516 *2	1-218-720-11	s	RESISTOR,CHIP 15K 1/16W(1608)
R520	1-218-644-11	s	RESISTOR,CHIP 10 1/16W
R521	1-216-864-11	s	CONDUCTOR, CHIP (1608)
R525	1-218-699-11	s	RESISTOR,CHIP 2.0K 1/16W(1608)
R526	1-218-699-11	s	RESISTOR,CHIP 2.0K 1/16W(1608)
R527	1-218-708-11	s	RESISTOR,CHIP 4.7K 1/16W(1608)
R528	1-218-708-11	s	RESISTOR,CHIP 4.7K 1/16W(1608)
R531	1-218-692-11	s	RESISTOR,CHIP 1.0K 1/16W(1608)
R532 *2	1-218-738-11	s	RESISTOR,CHIP 82K 1/16W(1608)
R533	1-218-700-11	s	RESISTOR,CHIP 2.2K 1/16W(1608)
R534	1-216-857-11	s	RESISTOR,CHIP 1M 1/10W(1608)
R535	1-218-713-11	s	RESISTOR,METAL 7.5K 1/16W
R536	1-218-713-11	s	RESISTOR,METAL 7.5K 1/16W
R537	1-218-712-11	s	RESISTOR,METAL 6.8K 1/16W
R538	1-218-702-11	s	RESISTOR CHIP 2.7K 1/16W(1608)
R539	1-218-718-11	s	RESISTOR CHIP 12K 1/16W (1608)
R540	1-216-863-11	s	RESISTOR,CHIP 3.3M 1/16W 1608
R541 *2	1-218-688-11	s	RESISTOR,CHIP 680 1/16W(1608)
*1	1-218-692-11	s	RESISTOR,CHIP 1.0K 1/16W(1608)
R542	1-218-692-11	s	RESISTOR,CHIP 1.0K 1/16W(1608)
R543 *2	1-218-752-11	s	RESISTOR,CHIP 330K 1/16W(1608)
*1	1-218-724-11	s	RESISTOR,CHIP 22K 1/16W(1608)
R544 *2	1-218-752-11	s	RESISTOR,CHIP 330K 1/16W(1608)
*1	1-218-692-11	s	RESISTOR,CHIP 1.0K 1/16W(1608)
R545 *2	1-218-736-11	s	RESISTOR,CHIP 68K 1/16W(1608)
*1	1-218-706-11	s	RESISTOR,CHIP 3.9K 1/16W(1608)
R547	1-218-720-11	s	RESISTOR,CHIP 15K 1/16W(1608)
R548	1-218-722-11	s	RESISTOR, CHIP 18K 1/16W 1608
R549	1-218-716-11	s	RESISTOR,CHIP 10K 1/16W(1608)
R550	1-218-714-11	s	RESISTOR,CHIP 8.2K 1/16W(1608)
R551	1-218-692-11	s	RESISTOR,CHIP 1.0K 1/16W(1608)
R553	1-218-688-11	s	RESISTOR,CHIP 680 1/16W(1608)
R554	1-218-698-11	s	RESISTOR,CHIP 1.8K 1/16W(1608)
R555	1-218-672-11	s	RESISTOR,CHIP 150 1/16W(1608)
R556	1-218-674-11	s	RESISTOR CHIP 180 1/16W (1608)
R557 *2	1-245-682-11	s	RESISTOR,METAL FILM 10K (1608)
*1	1-218-367-11	s	RESISTOR,METAL FILM CHIP 10K
R558 *2	1-245-682-11	s	RESISTOR,METAL FILM 10K (1608)
*1	1-218-367-11	s	RESISTOR,METAL FILM CHIP 10K
R559 *2	1-245-681-11	s	RESISTOR,METAL FILM 4.7K(1608)
*1	1-211-998-11	s	RESISTOR, METAL FILM CHIP 4.7K
R560 *2	1-245-681-11	s	RESISTOR,METAL FILM 4.7K(1608)
*1	1-211-998-11	s	RESISTOR, METAL FILM CHIP 4.7K
R561 *2	1-245-682-11	s	RESISTOR,METAL FILM 10K (1608)
*1	1-218-367-11	s	RESISTOR,METAL FILM CHIP 10K
R562 *2	1-245-681-11	s	RESISTOR,METAL FILM 4.7K(1608)
*1	1-211-998-11	s	RESISTOR, METAL FILM CHIP 4.7K
R563	1-218-692-11	s	RESISTOR,CHIP 1.0K 1/16W(1608)
R564	1-218-740-11	s	RESISTOR,CHIP 100K 1/16W(1608)
R565 *2	1-245-681-11	s	RESISTOR,METAL FILM 4.7K(1608)
*1	1-211-998-11	s	RESISTOR, METAL FILM CHIP 4.7K

(APR-52A BOARD for PLAYER)

Ref. No. or Q'ty	Part No.	SP	Description
R566	1-218-740-11	s	RESISTOR,CHIP 100K 1/16W(1608)
R567 *2	1-245-682-11	s	RESISTOR,METAL FILM 10K (1608)
*1	1-218-367-11	s	RESISTOR,METAL FILM CHIP 10K
R568 *2	1-245-682-11	s	RESISTOR,METAL FILM 10K (1608)
*1	1-218-367-11	s	RESISTOR,METAL FILM CHIP 10K
R569 *2	1-245-682-11	s	RESISTOR,METAL FILM 10K (1608)
*1	1-218-367-11	s	RESISTOR,METAL FILM CHIP 10K
R570	1-218-692-11	s	RESISTOR,CHIP 1.0K 1/16W(1608)
R571	1-218-660-91	s	RESISTOR,CHIP 47 1/16W (1608)
R572	1-218-740-11	s	RESISTOR,CHIP 100K 1/16W(1608)
R573	1-218-660-91	s	RESISTOR,CHIP 47 1/16W (1608)
R574	1-218-740-11	s	RESISTOR,CHIP 100K 1/16W(1608)
R575	1-218-716-11	s	RESISTOR,CHIP 10K 1/16W(1608)
R576	1-218-716-11	s	RESISTOR,CHIP 10K 1/16W(1608)
R577	1-218-716-11	s	RESISTOR,CHIP 10K 1/16W(1608)
R578	1-218-716-11	s	RESISTOR,CHIP 10K 1/16W(1608)
R580	1-219-493-11	s	RESISTOR, METAL FILM CHIP 22
R583	1-219-493-11	s	RESISTOR, METAL FILM CHIP 22
R585	1-218-680-11	s	RESISTOR,CHIP 330 1/16W(1608)
R586	1-218-700-11	s	RESISTOR,CHIP 2.2K 1/16W(1608)
R587	1-218-722-11	s	RESISTOR, CHIP 18K 1/16W 1608
R588	1-218-692-11	s	RESISTOR,CHIP 1.0K 1/16W(1608)
R593	1-219-493-11	s	RESISTOR, METAL FILM CHIP 22
R594	1-219-493-11	s	RESISTOR, METAL FILM CHIP 22
R601	1-218-660-91	s	RESISTOR,CHIP 47 1/16W (1608)
R602	1-218-692-11	s	RESISTOR,CHIP 1.0K 1/16W(1608)
R603	1-218-692-11	s	RESISTOR,CHIP 1.0K 1/16W(1608)
R605	1-216-864-11	s	CONDUCTOR, CHIP (1608)
R606	1-216-864-11	s	CONDUCTOR, CHIP (1608)
R610 *2	1-218-700-11	s	RESISTOR,CHIP 2.2K 1/16W(1608)
*1	1-216-659-11	s	RESISTOR,CHIP 2.2K 1/10W(2012)
R611 *2	1-218-700-11	s	RESISTOR,CHIP 2.2K 1/16W(1608)
*1	1-216-659-11	s	RESISTOR,CHIP 2.2K 1/10W(2012)
R613 *2	1-216-864-11	s	CONDUCTOR, CHIP (1608)
R614 *2	1-218-680-11	s	RESISTOR,CHIP 330 1/16W(1608)
R616 *2	1-218-720-11	s	RESISTOR,CHIP 15K 1/16W(1608)
R620	1-218-644-11	s	RESISTOR,CHIP 10 1/16W
R621	1-216-864-11	s	CONDUCTOR, CHIP (1608)
R625	1-218-699-11	s	RESISTOR,CHIP 2.0K 1/16W(1608)
R626	1-218-699-11	s	RESISTOR,CHIP 2.0K 1/16W(1608)
R627	1-218-708-11	s	RESISTOR,CHIP 4.7K 1/16W(1608)
R628	1-218-708-11	s	RESISTOR,CHIP 4.7K 1/16W(1608)
R631	1-218-692-11	s	RESISTOR,CHIP 1.0K 1/16W(1608)
R632 *2	deleted		
*1	1-218-738-11	s	RESISTOR,CHIP 82K 1/16W(1608)
R633	1-218-700-11	s	RESISTOR,CHIP 2.2K 1/16W(1608)
R634	1-216-857-11	s	RESISTOR,CHIP 1M 1/10W(1608)
R635	1-218-713-11	s	RESISTOR,METAL 7.5K 1/16W
R636	1-218-713-11	s	RESISTOR,METAL 7.5K 1/16W
R637	1-218-712-11	s	RESISTOR,METAL 6.8K 1/16W
R638	1-218-702-11	s	RESISTOR CHIP 2.7K 1/16W(1608)
R639	1-218-718-11	s	RESISTOR CHIP 12K 1/16W (1608)
R640	1-216-863-11	s	RESISTOR,CHIP 3.3M 1/16W 1608
R641 *2	1-218-688-11	s	RESISTOR,CHIP 680 1/16W(1608)
*1	1-218-692-11	s	RESISTOR,CHIP 1.0K 1/16W(1608)
R642	1-218-692-11	s	RESISTOR,CHIP 1.0K 1/16W(1608)
R643 *2	1-218-752-11	s	RESISTOR,CHIP 330K 1/16W(1608)
*1	1-218-724-11	s	RESISTOR,CHIP 22K 1/16W(1608)
R644 *2	1-218-752-11	s	RESISTOR,CHIP 330K 1/16W(1608)
*1	1-218-692-11	s	RESISTOR,CHIP 1.0K 1/16W(1608)

(APR-52A BOARD for PLAYER)

Ref. No. or Q'ty	Part No.	SP	Description
R645	*2 1-218-736-11	s	RESISTOR,CHIP 68K 1/16W(1608)
	*1 1-218-706-11	s	RESISTOR,CHIP 3.9K 1/16W(1608)
R647	1-218-720-11	s	RESISTOR,CHIP 15K 1/16W(1608)
R648	1-218-722-11	s	RESISTOR, CHIP 18K 1/16W 1608
R649	1-218-716-11	s	RESISTOR,CHIP 10K 1/16W(1608)
R650	1-218-714-11	s	RESISTOR,CHIP 8.2K 1/16W(1608)
R651	1-218-692-11	s	RESISTOR,CHIP 1.0K 1/16W(1608)
R653	1-218-688-11	s	RESISTOR,CHIP 680 1/16W(1608)
R654	1-218-698-11	s	RESISTOR,CHIP 1.8K 1/16W(1608)
R655	1-218-672-11	s	RESISTOR,CHIP 150 1/16W(1608)
R656	1-218-674-11	s	RESISTOR CHIP 180 1/16W (1608)
R657	*2 1-245-682-11	s	RESISTOR,METAL FILM 10K (1608)
	*1 1-218-367-11	s	RESISTOR,METAL FILM CHIP 10K
R658	*2 1-245-682-11	s	RESISTOR,METAL FILM 10K (1608)
	*1 1-218-367-11	s	RESISTOR,METAL FILM CHIP 10K
R659	*2 1-245-681-11	s	RESISTOR,METAL FILM 4.7K(1608)
	*1 1-211-998-11	s	RESISTOR, METAL FILM CHIP 4.7K
R660	*2 1-245-681-11	s	RESISTOR,METAL FILM 4.7K(1608)
	*1 1-211-998-11	s	RESISTOR, METAL FILM CHIP 4.7K
R661	*2 1-245-682-11	s	RESISTOR,METAL FILM 10K (1608)
	*1 1-218-367-11	s	RESISTOR,METAL FILM CHIP 10K
R662	*2 1-245-681-11	s	RESISTOR,METAL FILM 4.7K(1608)
	*1 1-211-998-11	s	RESISTOR, METAL FILM CHIP 4.7K
R663	1-218-692-11	s	RESISTOR,CHIP 1.0K 1/16W(1608)
R664	1-218-740-11	s	RESISTOR,CHIP 100K 1/16W(1608)
R665	*2 1-245-681-11	s	RESISTOR,METAL FILM 4.7K(1608)
	*1 1-211-998-11	s	RESISTOR, METAL FILM CHIP 4.7K
R666	1-218-740-11	s	RESISTOR,CHIP 100K 1/16W(1608)
R667	*2 1-245-682-11	s	RESISTOR,METAL FILM 10K (1608)
	*1 1-218-367-11	s	RESISTOR,METAL FILM CHIP 10K
R668	*2 1-245-682-11	s	RESISTOR,METAL FILM 10K (1608)
	*1 1-218-367-11	s	RESISTOR,METAL FILM CHIP 10K
R669	*2 1-245-682-11	s	RESISTOR,METAL FILM 10K (1608)
	*1 1-218-367-11	s	RESISTOR,METAL FILM CHIP 10K
R670	1-218-692-11	s	RESISTOR,CHIP 1.0K 1/16W(1608)
R671	1-218-660-91	s	RESISTOR,CHIP 47 1/16W (1608)
R672	1-218-740-11	s	RESISTOR,CHIP 100K 1/16W(1608)
R673	1-218-660-91	s	RESISTOR,CHIP 47 1/16W (1608)
R674	1-218-740-11	s	RESISTOR,CHIP 100K 1/16W(1608)
R675	1-218-716-11	s	RESISTOR,CHIP 10K 1/16W(1608)
R676	1-218-716-11	s	RESISTOR,CHIP 10K 1/16W(1608)
R677	1-218-716-11	s	RESISTOR,CHIP 10K 1/16W(1608)
R678	1-218-716-11	s	RESISTOR,CHIP 10K 1/16W(1608)
R680	1-219-493-11	s	RESISTOR, METAL FILM CHIP 22
R683	1-219-493-11	s	RESISTOR, METAL FILM CHIP 22
R685	1-218-680-11	s	RESISTOR,CHIP 330 1/16W(1608)
R686	1-218-700-11	s	RESISTOR,CHIP 2.2K 1/16W(1608)
R687	1-218-722-11	s	RESISTOR, CHIP 18K 1/16W 1608
R688	1-218-692-11	s	RESISTOR,CHIP 1.0K 1/16W(1608)
R693	1-219-493-11	s	RESISTOR, METAL FILM CHIP 22
R694	1-219-493-11	s	RESISTOR, METAL FILM CHIP 22
R700	1-218-652-11	s	RESISTOR,CHIP 22 1/10W (1608)
R701	1-218-692-11	s	RESISTOR,CHIP 1.0K 1/16W(1608)
R702	1-218-660-91	s	RESISTOR,CHIP 47 1/16W (1608)
R703	1-218-692-11	s	RESISTOR,CHIP 1.0K 1/16W(1608)
R704	1-218-668-11	s	RESISTOR,CHIP 100 1/16W (1608)
R705	1-216-864-11	s	CONDUCTOR, CHIP (1608)
R706	1-216-864-11	s	CONDUCTOR, CHIP (1608)
R710	*2 1-218-700-11	s	RESISTOR,CHIP 2.2K 1/16W(1608)
	*1 1-216-659-11	s	RESISTOR,CHIP 2.2K 1/10W(2012)
R711	*2 1-218-700-11	s	RESISTOR,CHIP 2.2K 1/16W(1608)
	*1 1-216-659-11	s	RESISTOR,CHIP 2.2K 1/10W(2012)

(APR-52A BOARD for PLAYER)

Ref. No. or Q'ty	Part No.	SP	Description
R713	*2 1-216-864-11	s	CONDUCTOR, CHIP (1608)
R714	*2 1-218-680-11	s	RESISTOR,CHIP 330 1/16W(1608)
R715	1-218-708-11	s	RESISTOR,CHIP 4.7K 1/16W(1608)
R716	*2 1-218-720-11	s	RESISTOR,CHIP 15K 1/16W(1608)
R720	1-218-644-11	s	RESISTOR,CHIP 10 1/16W
R721	1-216-864-11	s	CONDUCTOR, CHIP (1608)
R725	1-218-699-11	s	RESISTOR,CHIP 2.0K 1/16W(1608)
R726	1-218-699-11	s	RESISTOR,CHIP 2.0K 1/16W(1608)
R727	1-218-708-11	s	RESISTOR,CHIP 4.7K 1/16W(1608)
R728	1-218-708-11	s	RESISTOR,CHIP 4.7K 1/16W(1608)
R731	1-218-692-11	s	RESISTOR,CHIP 1.0K 1/16W(1608)
R732	*2 deleted		
	*1 1-218-738-11	s	RESISTOR,CHIP 82K 1/16W(1608)
R733	1-218-700-11	s	RESISTOR,CHIP 2.2K 1/16W(1608)
R734	1-216-857-11	s	RESISTOR,CHIP 1M 1/10W(1608)
R735	1-218-713-11	s	RESISTOR,METAL 7.5K 1/16W
R736	1-218-713-11	s	RESISTOR,METAL 7.5K 1/16W
R737	1-218-712-11	s	RESISTOR,METAL 6.8K 1/16W
R738	1-218-702-11	s	RESISTOR CHIP 2.7K 1/16W(1608)
R739	1-218-718-11	s	RESISTOR CHIP 12K 1/16W (1608)
R740	1-216-863-11	s	RESISTOR,CHIP 3.3M 1/16W 1608
R741	*2 1-218-688-11	s	RESISTOR,CHIP 680 1/16W(1608)
	*1 1-218-692-11	s	RESISTOR,CHIP 1.0K 1/16W(1608)
R742	1-218-692-11	s	RESISTOR,CHIP 1.0K 1/16W(1608)
R743	*2 1-218-752-11	s	RESISTOR,CHIP 330K 1/16W(1608)
	*1 1-218-724-11	s	RESISTOR,CHIP 22K 1/16W(1608)
R744	*2 1-218-752-11	s	RESISTOR,CHIP 330K 1/16W(1608)
	*1 1-218-692-11	s	RESISTOR,CHIP 1.0K 1/16W(1608)
R745	*2 1-218-736-11	s	RESISTOR,CHIP 68K 1/16W(1608)
	*1 1-218-706-11	s	RESISTOR,CHIP 3.9K 1/16W(1608)
R747	1-218-720-11	s	RESISTOR,CHIP 15K 1/16W(1608)
R748	1-218-722-11	s	RESISTOR, CHIP 18K 1/16W 1608
R749	1-218-716-11	s	RESISTOR,CHIP 10K 1/16W(1608)
R750	1-218-714-11	s	RESISTOR,CHIP 8.2K 1/16W(1608)
R751	1-218-692-11	s	RESISTOR,CHIP 1.0K 1/16W(1608)
R753	1-218-688-11	s	RESISTOR,CHIP 680 1/16W(1608)
R754	1-218-698-11	s	RESISTOR,CHIP 1.8K 1/16W(1608)
R755	1-218-672-11	s	RESISTOR,CHIP 150 1/16W(1608)
R756	1-218-674-11	s	RESISTOR CHIP 180 1/16W (1608)
R757	*2 1-245-682-11	s	RESISTOR,METAL FILM 10K (1608)
	*1 1-218-367-11	s	RESISTOR,METAL FILM CHIP 10K
R758	*2 1-245-682-11	s	RESISTOR,METAL FILM 10K (1608)
	*1 1-218-367-11	s	RESISTOR,METAL FILM CHIP 10K
R759	*2 1-245-681-11	s	RESISTOR,METAL FILM 4.7K(1608)
	*1 1-211-998-11	s	RESISTOR, METAL FILM CHIP 4.7K
R760	*2 1-245-681-11	s	RESISTOR,METAL FILM 4.7K(1608)
	*1 1-211-998-11	s	RESISTOR, METAL FILM CHIP 4.7K
R761	*2 1-245-682-11	s	RESISTOR,METAL FILM 10K (1608)
	*1 1-218-367-11	s	RESISTOR,METAL FILM CHIP 10K
R762	*2 1-245-681-11	s	RESISTOR,METAL FILM 4.7K(1608)
	*1 1-211-998-11	s	RESISTOR, METAL FILM CHIP 4.7K
R763	*2 1-245-681-11	s	RESISTOR,METAL FILM 4.7K(1608)
	*1 1-211-998-11	s	RESISTOR, METAL FILM CHIP 4.7K
R764	1-218-692-11	s	RESISTOR,CHIP 1.0K 1/16W(1608)
R765	1-218-740-11	s	RESISTOR,CHIP 100K 1/16W(1608)
R766	*2 1-245-682-11	s	RESISTOR,METAL FILM 10K (1608)
	*1 1-218-367-11	s	RESISTOR,METAL FILM CHIP 10K
R767	*2 1-245-682-11	s	RESISTOR,METAL FILM 10K (1608)
	*1 1-218-367-11	s	RESISTOR,METAL FILM CHIP 10K
R768	*2 1-245-682-11	s	RESISTOR,METAL FILM 10K (1608)
	*1 1-218-367-11	s	RESISTOR,METAL FILM CHIP 10K

(APR-52A BOARD for PLAYER)

Ref. No. or Q'ty	Part No.	SP	Description
R769	1-218-740-11	s	RESISTOR,CHIP 100K 1/16W(1608)
R770	1-218-660-91	s	RESISTOR,CHIP 47 1/16W (1608)
R771	1-218-660-91	s	RESISTOR,CHIP 47 1/16W (1608)
R772	1-218-692-11	s	RESISTOR,CHIP 1.0K 1/16W(1608)
R773	1-218-740-11	s	RESISTOR,CHIP 100K 1/16W(1608)
R774	1-218-740-11	s	RESISTOR,CHIP 100K 1/16W(1608)
R776	1-219-493-11	s	RESISTOR, METAL FILM CHIP 22
R778	1-218-716-11	s	RESISTOR,CHIP 10K 1/16W(1608)
R779	1-218-716-11	s	RESISTOR,CHIP 10K 1/16W(1608)
R780	1-218-716-11	s	RESISTOR,CHIP 10K 1/16W(1608)
R782	1-219-493-11	s	RESISTOR, METAL FILM CHIP 22
R784	1-218-716-11	s	RESISTOR,CHIP 10K 1/16W(1608)
R785	1-218-680-11	s	RESISTOR,CHIP 330 1/16W(1608)
R786	1-218-700-11	s	RESISTOR,CHIP 2.2K 1/16W(1608)
R787	1-218-722-11	s	RESISTOR, CHIP 18K 1/16W 1608
R788	1-218-692-11	s	RESISTOR,CHIP 1.0K 1/16W(1608)
R794	1-219-493-11	s	RESISTOR, METAL FILM CHIP 22
R795	1-219-493-11	s	RESISTOR, METAL FILM CHIP 22
R801	1-218-692-11	s	RESISTOR,CHIP 1.0K 1/16W(1608)
R803	1-218-692-11	s	RESISTOR,CHIP 1.0K 1/16W(1608)
R805	1-216-864-11	s	CONDUCTOR, CHIP (1608)
R806	1-216-864-11	s	CONDUCTOR, CHIP (1608)
R810 *2	1-218-700-11	s	RESISTOR,CHIP 2.2K 1/16W(1608)
*1	1-216-659-11	s	RESISTOR,CHIP 2.2K 1/10W(2012)
R811 *2	1-218-700-11	s	RESISTOR,CHIP 2.2K 1/16W(1608)
*1	1-216-659-11	s	RESISTOR,CHIP 2.2K 1/10W(2012)
R813 *2	1-216-864-11	s	CONDUCTOR, CHIP (1608)
R814 *2	1-218-680-11	s	RESISTOR,CHIP 330 1/16W(1608)
R816 *2	1-218-720-11	s	RESISTOR,CHIP 15K 1/16W(1608)
R820	1-218-644-11	s	RESISTOR,CHIP 10 1/16W
R821	1-216-864-11	s	CONDUCTOR, CHIP (1608)
R825	1-218-699-11	s	RESISTOR,CHIP 2.0K 1/16W(1608)
R826	1-218-699-11	s	RESISTOR,CHIP 2.0K 1/16W(1608)
R827	1-218-708-11	s	RESISTOR,CHIP 4.7K 1/16W(1608)
R828	1-218-708-11	s	RESISTOR,CHIP 4.7K 1/16W(1608)
R831	1-218-692-11	s	RESISTOR,CHIP 1.0K 1/16W(1608)
R832 *2	deleted		
*1	1-218-738-11	s	RESISTOR,CHIP 82K 1/16W(1608)
R833	1-218-700-11	s	RESISTOR,CHIP 2.2K 1/16W(1608)
R834	1-216-857-11	s	RESISTOR,CHIP 1M 1/10W(1608)
R835	1-218-713-11	s	RESISTOR,METAL 7.5K 1/16W
R836	1-218-713-11	s	RESISTOR,METAL 7.5K 1/16W
R837	1-218-712-11	s	RESISTOR,METAL 6.8K 1/16W
R838	1-218-702-11	s	RESISTOR CHIP 2.7K 1/16W(1608)
R839	1-218-718-11	s	RESISTOR CHIP 12K 1/16W (1608)
R840	1-216-863-11	s	RESISTOR,CHIP 3.3M 1/16W 1608
R841 *2	1-218-688-11	s	RESISTOR,CHIP 680 1/16W(1608)
*1	1-218-692-11	s	RESISTOR,CHIP 1.0K 1/16W(1608)
R842	1-218-692-11	s	RESISTOR,CHIP 1.0K 1/16W(1608)
R843 *2	1-218-752-11	s	RESISTOR,CHIP 330K 1/16W(1608)
*1	1-218-724-11	s	RESISTOR,CHIP 22K 1/16W(1608)
R844 *2	1-218-752-11	s	RESISTOR,CHIP 330K 1/16W(1608)
*1	1-218-692-11	s	RESISTOR,CHIP 1.0K 1/16W(1608)
R845 *2	1-218-736-11	s	RESISTOR,CHIP 68K 1/16W(1608)
*1	1-218-706-11	s	RESISTOR,CHIP 3.9K 1/16W(1608)
R847	1-218-720-11	s	RESISTOR,CHIP 15K 1/16W(1608)
R848	1-218-722-11	s	RESISTOR, CHIP 18K 1/16W 1608
R849	1-218-716-11	s	RESISTOR,CHIP 10K 1/16W(1608)
R850	1-218-714-11	s	RESISTOR,CHIP 8.2K 1/16W(1608)
R851	1-218-692-11	s	RESISTOR,CHIP 1.0K 1/16W(1608)

(APR-52A BOARD for PLAYER)

Ref. No. or Q'ty	Part No.	SP	Description
R853	1-218-688-11	s	RESISTOR,CHIP 680 1/16W(1608)
R854	1-218-698-11	s	RESISTOR,CHIP 1.8K 1/16W(1608)
R855	1-218-672-11	s	RESISTOR,CHIP 150 1/16W(1608)
R856	1-218-674-11	s	RESISTOR CHIP 180 1/16W (1608)
R857 *2	1-245-682-11	s	RESISTOR,METAL FILM 10K (1608)
*1	1-218-367-11	s	RESISTOR,METAL FILM CHIP 10K
R858 *2	1-245-682-11	s	RESISTOR,METAL FILM 10K (1608)
*1	1-218-367-11	s	RESISTOR,METAL FILM CHIP 10K
R859 *2	1-245-681-11	s	RESISTOR,METAL FILM 4.7K(1608)
*1	1-211-998-11	s	RESISTOR, METAL FILM CHIP 4.7K
R860 *2	1-245-681-11	s	RESISTOR,METAL FILM 4.7K(1608)
*1	1-211-998-11	s	RESISTOR, METAL FILM CHIP 4.7K
R861 *2	1-245-682-11	s	RESISTOR,METAL FILM 10K (1608)
*1	1-218-367-11	s	RESISTOR,METAL FILM CHIP 10K
R862 *2	1-245-681-11	s	RESISTOR,METAL FILM 4.7K(1608)
*1	1-211-998-11	s	RESISTOR, METAL FILM CHIP 4.7K
R863 *2	1-245-681-11	s	RESISTOR,METAL FILM 4.7K(1608)
*1	1-211-998-11	s	RESISTOR, METAL FILM CHIP 4.7K
R864	1-218-692-11	s	RESISTOR,CHIP 1.0K 1/16W(1608)
R865	1-218-740-11	s	RESISTOR,CHIP 100K 1/16W(1608)
R866 *2	1-245-682-11	s	RESISTOR,METAL FILM 10K (1608)
*1	1-218-367-11	s	RESISTOR,METAL FILM CHIP 10K
R867 *2	1-245-682-11	s	RESISTOR,METAL FILM 10K (1608)
*1	1-218-367-11	s	RESISTOR,METAL FILM CHIP 10K
R868 *2	1-245-682-11	s	RESISTOR,METAL FILM 10K (1608)
*1	1-218-367-11	s	RESISTOR,METAL FILM CHIP 10K
R869	1-218-740-11	s	RESISTOR,CHIP 100K 1/16W(1608)
R870	1-218-660-91	s	RESISTOR,CHIP 47 1/16W (1608)
R871	1-218-660-91	s	RESISTOR,CHIP 47 1/16W (1608)
R872	1-218-692-11	s	RESISTOR,CHIP 1.0K 1/16W(1608)
R873	1-218-740-11	s	RESISTOR,CHIP 100K 1/16W(1608)
R874	1-218-740-11	s	RESISTOR,CHIP 100K 1/16W(1608)
R876	1-219-493-11	s	RESISTOR, METAL FILM CHIP 22
R878	1-218-716-11	s	RESISTOR,CHIP 10K 1/16W(1608)
R879	1-218-716-11	s	RESISTOR,CHIP 10K 1/16W(1608)
R880	1-218-716-11	s	RESISTOR,CHIP 10K 1/16W(1608)
R882	1-219-493-11	s	RESISTOR, METAL FILM CHIP 22
R884	1-218-716-11	s	RESISTOR,CHIP 10K 1/16W(1608)
R885	1-218-680-11	s	RESISTOR,CHIP 330 1/16W(1608)
R886	1-218-700-11	s	RESISTOR,CHIP 2.2K 1/16W(1608)
R887	1-218-722-11	s	RESISTOR, CHIP 18K 1/16W 1608
R888	1-218-692-11	s	RESISTOR,CHIP 1.0K 1/16W(1608)
R893	1-218-660-91	s	RESISTOR,CHIP 47 1/16W (1608)
R894	1-219-493-11	s	RESISTOR, METAL FILM CHIP 22
R895	1-219-493-11	s	RESISTOR, METAL FILM CHIP 22
R900	1-218-652-11	s	RESISTOR,CHIP 22 1/10W (1608)
R903	1-218-660-91	s	RESISTOR,CHIP 47 1/16W (1608)
R904	1-218-668-11	s	RESISTOR,CHIP 100 1/16W (1608)
R906	1-218-708-11	s	RESISTOR,CHIP 4.7K 1/16W(1608)
R907	1-216-864-11	s	CONDUCTOR, CHIP (1608)
R908	1-216-864-11	s	CONDUCTOR, CHIP (1608)
R910 *2	1-218-700-11	s	RESISTOR,CHIP 2.2K 1/16W(1608)
*1	1-216-659-11	s	RESISTOR,CHIP 2.2K 1/10W(2012)
R911 *2	1-218-700-11	s	RESISTOR,CHIP 2.2K 1/16W(1608)
*1	1-216-659-11	s	RESISTOR,CHIP 2.2K 1/10W(2012)
R913 *2	1-216-864-11	s	CONDUCTOR, CHIP (1608)
R915	1-218-708-11	s	RESISTOR,CHIP 4.7K 1/16W(1608)
R916 *2	1-218-698-11	s	RESISTOR,CHIP 1.8K 1/16W(1608)
R917 *2	1-218-698-11	s	RESISTOR,CHIP 1.8K 1/16W(1608)
R918 *2	1-218-720-11	s	RESISTOR,CHIP 15K 1/16W(1608)
R919 *2	1-218-680-11	s	RESISTOR,CHIP 330 1/16W(1608)

(APR-52A BOARD for PLAYER)

Ref. No. or Q'ty	Part No.	SP	Description
R920	1-218-644-11	s	RESISTOR,CHIP 10 1/16W
R921	1-216-864-11	s	CONDUCTOR, CHIP (1608)
R925	1-218-699-11	s	RESISTOR,CHIP 2.0K 1/16W(1608)
R926	1-218-699-11	s	RESISTOR,CHIP 2.0K 1/16W(1608)
R927	1-218-708-11	s	RESISTOR,CHIP 4.7K 1/16W(1608)
R928	1-218-708-11	s	RESISTOR,CHIP 4.7K 1/16W(1608)
R931	1-218-692-11	s	RESISTOR,CHIP 1.0K 1/16W(1608)
R932 *2	deleted		
*1	1-218-738-11	s	RESISTOR,CHIP 82K 1/16W(1608)
R933	1-218-700-11	s	RESISTOR,CHIP 2.2K 1/16W(1608)
R934	1-216-857-11	s	RESISTOR,CHIP 1M 1/10W(1608)
R935	1-218-713-11	s	RESISTOR,METAL 7.5K 1/16W
R936	1-218-713-11	s	RESISTOR,METAL 7.5K 1/16W
R937	1-218-712-11	s	RESISTOR,METAL 6.8K 1/16W
R938	1-218-702-11	s	RESISTOR CHIP 2.7K 1/16W(1608)
R939	1-218-718-11	s	RESISTOR CHIP 12K 1/16W (1608)
R940	1-216-863-11	s	RESISTOR,CHIP 3.3M 1/16W 1608
R941 *2	1-218-688-11	s	RESISTOR,CHIP 680 1/16W(1608)
*1	1-218-692-11	s	RESISTOR,CHIP 1.0K 1/16W(1608)
R942	1-218-692-11	s	RESISTOR,CHIP 1.0K 1/16W(1608)
R943 *2	1-218-752-11	s	RESISTOR,CHIP 330K 1/16W(1608)
*1	1-218-724-11	s	RESISTOR,CHIP 22K 1/16W(1608)
R944 *2	1-218-752-11	s	RESISTOR,CHIP 330K 1/16W(1608)
*1	1-218-692-11	s	RESISTOR,CHIP 1.0K 1/16W(1608)
R945 *2	1-218-736-11	s	RESISTOR,CHIP 68K 1/16W(1608)
*1	1-218-706-11	s	RESISTOR,CHIP 3.9K 1/16W(1608)
R946	1-218-660-91	s	RESISTOR,CHIP 47 1/16W (1608)
R947 *2	1-218-704-11	s	RESISTOR,CHIP 3.3K 1/16W(1608)
*1	1-218-709-11	s	RESISTOR,CHIP 5.1K 1/16W
R948 *2	1-218-704-11	s	RESISTOR,CHIP 3.3K 1/16W(1608)
*1	1-218-709-11	s	RESISTOR,CHIP 5.1K 1/16W
R950	1-218-708-11	s	RESISTOR,CHIP 4.7K 1/16W(1608)
R951	1-218-708-11	s	RESISTOR,CHIP 4.7K 1/16W(1608)
R952	1-218-720-11	s	RESISTOR,CHIP 15K 1/16W(1608)
R953	1-218-722-11	s	RESISTOR, CHIP 18K 1/16W 1608
R954	1-218-716-11	s	RESISTOR,CHIP 10K 1/16W(1608)
R955	1-218-714-11	s	RESISTOR,CHIP 8.2K 1/16W(1608)
R956	1-218-692-11	s	RESISTOR,CHIP 1.0K 1/16W(1608)
R958	1-218-688-11	s	RESISTOR,CHIP 680 1/16W(1608)
R959	1-218-698-11	s	RESISTOR,CHIP 1.8K 1/16W(1608)
R960	1-218-672-11	s	RESISTOR,CHIP 150 1/16W(1608)
R961	1-218-674-11	s	RESISTOR CHIP 180 1/16W (1608)
R962 *2	1-245-682-11	s	RESISTOR,METAL FILM 10K (1608)
*1	1-218-367-11	s	RESISTOR,METAL FILM CHIP 10K
R963 *2	1-245-682-11	s	RESISTOR,METAL FILM 10K (1608)
*1	1-218-367-11	s	RESISTOR,METAL FILM CHIP 10K
R964 *2	1-245-681-11	s	RESISTOR,METAL FILM 4.7K(1608)
*1	1-211-998-11	s	RESISTOR, METAL FILM CHIP 4.7K
R965 *2	1-245-681-11	s	RESISTOR,METAL FILM 4.7K(1608)
*1	1-211-998-11	s	RESISTOR, METAL FILM CHIP 4.7K
R966 *2	1-245-682-11	s	RESISTOR,METAL FILM 10K (1608)
*1	1-218-367-11	s	RESISTOR,METAL FILM CHIP 10K
R967 *2	1-245-681-11	s	RESISTOR,METAL FILM 4.7K(1608)
*1	1-211-998-11	s	RESISTOR, METAL FILM CHIP 4.7K
R968 *2	1-245-681-11	s	RESISTOR,METAL FILM 4.7K(1608)
*1	1-211-998-11	s	RESISTOR, METAL FILM CHIP 4.7K
R969	1-218-692-11	s	RESISTOR,CHIP 1.0K 1/16W(1608)
R970	1-218-740-11	s	RESISTOR,CHIP 100K 1/16W(1608)
R971 *2	1-245-682-11	s	RESISTOR,METAL FILM 10K (1608)
*1	1-218-367-11	s	RESISTOR,METAL FILM CHIP 10K
R972 *2	1-245-682-11	s	RESISTOR,METAL FILM 10K (1608)
*1	1-218-367-11	s	RESISTOR,METAL FILM CHIP 10K

(APR-52A BOARD for PLAYER)

Ref. No. or Q'ty	Part No.	SP	Description
R973 *2	1-245-682-11	s	RESISTOR,METAL FILM 10K (1608)
*1	1-218-367-11	s	RESISTOR,METAL FILM CHIP 10K
R974	1-218-740-11	s	RESISTOR,CHIP 100K 1/16W(1608)
R975	1-218-660-91	s	RESISTOR,CHIP 47 1/16W (1608)
R976	1-218-660-91	s	RESISTOR,CHIP 47 1/16W (1608)
R977	1-218-692-11	s	RESISTOR,CHIP 1.0K 1/16W(1608)
R978	1-218-740-11	s	RESISTOR,CHIP 100K 1/16W(1608)
R979	1-218-740-11	s	RESISTOR,CHIP 100K 1/16W(1608)
R981	1-219-493-11	s	RESISTOR, METAL FILM CHIP 22
R983	1-218-716-11	s	RESISTOR,CHIP 10K 1/16W(1608)
R984	1-218-716-11	s	RESISTOR,CHIP 10K 1/16W(1608)
R985	1-218-716-11	s	RESISTOR,CHIP 10K 1/16W(1608)
R987	1-219-493-11	s	RESISTOR, METAL FILM CHIP 22
R989	1-218-716-11	s	RESISTOR,CHIP 10K 1/16W(1608)
R990	1-218-680-11	s	RESISTOR,CHIP 330 1/16W(1608)
R991	1-218-700-11	s	RESISTOR,CHIP 2.2K 1/16W(1608)
R993	1-218-722-11	s	RESISTOR, CHIP 18K 1/16W 1608
R994	1-218-692-11	s	RESISTOR,CHIP 1.0K 1/16W(1608)
R995	1-219-493-11	s	RESISTOR, METAL FILM CHIP 22
R996	1-219-493-11	s	RESISTOR, METAL FILM CHIP 22
R1000	1-218-660-91	s	RESISTOR,CHIP 47 1/16W (1608)
R1003	1-218-660-91	s	RESISTOR,CHIP 47 1/16W (1608)
R1006	1-218-708-11	s	RESISTOR,CHIP 4.7K 1/16W(1608)
R1007	1-216-864-11	s	CONDUCTOR, CHIP (1608)
R1008	1-216-864-11	s	CONDUCTOR, CHIP (1608)
R1010 *2	1-218-700-11	s	RESISTOR,CHIP 2.2K 1/16W(1608)
*1	1-216-659-11	s	RESISTOR,CHIP 2.2K 1/10W(2012)
R1011 *2	1-218-700-11	s	RESISTOR,CHIP 2.2K 1/16W(1608)
*1	1-216-659-11	s	RESISTOR,CHIP 2.2K 1/10W(2012)
R1015 *2	1-216-864-11	s	CONDUCTOR, CHIP (1608)
R1016 *2	1-218-698-11	s	RESISTOR,CHIP 1.8K 1/16W(1608)
R1017 *2	1-218-698-11	s	RESISTOR,CHIP 1.8K 1/16W(1608)
R1018 *2	1-218-720-11	s	RESISTOR,CHIP 15K 1/16W(1608)
R1019 *2	1-218-680-11	s	RESISTOR,CHIP 330 1/16W(1608)
R1020	1-218-644-11	s	RESISTOR,CHIP 10 1/16W
R1021	1-216-864-11	s	CONDUCTOR, CHIP (1608)
R1025	1-218-699-11	s	RESISTOR,CHIP 2.0K 1/16W(1608)
R1026	1-218-699-11	s	RESISTOR,CHIP 2.0K 1/16W(1608)
R1027	1-218-708-11	s	RESISTOR,CHIP 4.7K 1/16W(1608)
R1028	1-218-708-11	s	RESISTOR,CHIP 4.7K 1/16W(1608)
R1031	1-218-692-11	s	RESISTOR,CHIP 1.0K 1/16W(1608)
R1032 *2	deleted		
*1	1-218-738-11	s	RESISTOR,CHIP 82K 1/16W(1608)
R1033	1-218-700-11	s	RESISTOR,CHIP 2.2K 1/16W(1608)
R1034	1-216-857-11	s	RESISTOR,CHIP 1M 1/10W(1608)
R1035	1-218-713-11	s	RESISTOR,METAL 7.5K 1/16W
R1036	1-218-713-11	s	RESISTOR,METAL 7.5K 1/16W
R1037	1-218-712-11	s	RESISTOR,METAL 6.8K 1/16W
R1038	1-218-702-11	s	RESISTOR CHIP 2.7K 1/16W(1608)
R1039	1-218-718-11	s	RESISTOR CHIP 12K 1/16W (1608)
R1040	1-216-863-11	s	RESISTOR,CHIP 3.3M 1/16W 1608
R1041 *2	1-218-688-11	s	RESISTOR,CHIP 680 1/16W(1608)
*1	1-218-692-11	s	RESISTOR,CHIP 1.0K 1/16W(1608)
R1042	1-218-692-11	s	RESISTOR,CHIP 1.0K 1/16W(1608)
R1043 *2	1-218-752-11	s	RESISTOR,CHIP 330K 1/16W(1608)
*1	1-218-724-11	s	RESISTOR,CHIP 22K 1/16W(1608)
R1044 *2	1-218-752-11	s	RESISTOR,CHIP 330K 1/16W(1608)
*1	1-218-692-11	s	RESISTOR,CHIP 1.0K 1/16W(1608)
R1045 *2	1-218-736-11	s	RESISTOR,CHIP 68K 1/16W(1608)
*1	1-218-706-11	s	RESISTOR,CHIP 3.9K 1/16W(1608)

(APR-52A BOARD for PLAYER)

Ref. No. or Q'ty	Part No.	SP	Description
R1047 *2	1-218-704-11	s	RESISTOR,CHIP 3.3K 1/16W(1608)
*1	1-218-709-11	s	RESISTOR,CHIP 5.1K 1/16W
R1048 *2	1-218-704-11	s	RESISTOR,CHIP 3.3K 1/16W(1608)
*1	1-218-709-11	s	RESISTOR,CHIP 5.1K 1/16W
R1050	1-218-708-11	s	RESISTOR,CHIP 4.7K 1/16W(1608)
R1051	1-218-708-11	s	RESISTOR,CHIP 4.7K 1/16W(1608)
R1052	1-218-720-11	s	RESISTOR,CHIP 15K 1/16W(1608)
R1053	1-218-722-11	s	RESISTOR, CHIP 18K 1/16W 1608
R1054	1-218-716-11	s	RESISTOR,CHIP 10K 1/16W(1608)
R1055	1-218-714-11	s	RESISTOR,CHIP 8.2K 1/16W(1608)
R1056	1-218-692-11	s	RESISTOR,CHIP 1.0K 1/16W(1608)
R1058	1-218-688-11	s	RESISTOR,CHIP 680 1/16W(1608)
R1059	1-218-698-11	s	RESISTOR,CHIP 1.8K 1/16W(1608)
R1060	1-218-672-11	s	RESISTOR,CHIP 150 1/16W(1608)
R1061	1-218-674-11	s	RESISTOR CHIP 180 1/16W (1608)
R1062 *2	1-245-682-11	s	RESISTOR,METAL FILM 10K (1608)
*1	1-218-367-11	s	RESISTOR,METAL FILM CHIP 10K
R1063 *2	1-245-682-11	s	RESISTOR,METAL FILM 10K (1608)
*1	1-218-367-11	s	RESISTOR,METAL FILM CHIP 10K
R1064 *2	1-245-681-11	s	RESISTOR,METAL FILM 4.7K(1608)
*1	1-211-998-11	s	RESISTOR, METAL FILM CHIP 4.7K
R1065 *2	1-245-681-11	s	RESISTOR,METAL FILM 4.7K(1608)
*1	1-211-998-11	s	RESISTOR, METAL FILM CHIP 4.7K
R1066 *2	1-245-682-11	s	RESISTOR,METAL FILM 10K (1608)
*1	1-218-367-11	s	RESISTOR,METAL FILM CHIP 10K
R1067 *2	1-245-681-11	s	RESISTOR,METAL FILM 4.7K(1608)
*1	1-211-998-11	s	RESISTOR, METAL FILM CHIP 4.7K
R1068 *2	1-245-681-11	s	RESISTOR,METAL FILM 4.7K(1608)
*1	1-211-998-11	s	RESISTOR, METAL FILM CHIP 4.7K
R1069	1-218-692-11	s	RESISTOR,CHIP 1.0K 1/16W(1608)
R1070	1-218-740-11	s	RESISTOR,CHIP 100K 1/16W(1608)
R1071 *2	1-245-682-11	s	RESISTOR,METAL FILM 10K (1608)
*1	1-218-367-11	s	RESISTOR,METAL FILM CHIP 10K
R1072 *2	1-245-682-11	s	RESISTOR,METAL FILM 10K (1608)
*1	1-218-367-11	s	RESISTOR,METAL FILM CHIP 10K
R1073 *2	1-245-682-11	s	RESISTOR,METAL FILM 10K (1608)
*1	1-218-367-11	s	RESISTOR,METAL FILM CHIP 10K
R1074	1-218-740-11	s	RESISTOR,CHIP 100K 1/16W(1608)
R1075	1-218-660-91	s	RESISTOR,CHIP 47 1/16W (1608)
R1076	1-218-660-91	s	RESISTOR,CHIP 47 1/16W (1608)
R1077	1-218-692-11	s	RESISTOR,CHIP 1.0K 1/16W(1608)
R1078	1-218-740-11	s	RESISTOR,CHIP 100K 1/16W(1608)
R1079	1-218-740-11	s	RESISTOR,CHIP 100K 1/16W(1608)
R1081	1-219-493-11	s	RESISTOR, METAL FILM CHIP 22
R1083	1-218-716-11	s	RESISTOR,CHIP 10K 1/16W(1608)
R1084	1-218-716-11	s	RESISTOR,CHIP 10K 1/16W(1608)
R1085	1-218-716-11	s	RESISTOR,CHIP 10K 1/16W(1608)
R1087	1-219-493-11	s	RESISTOR, METAL FILM CHIP 22
R1089	1-218-716-11	s	RESISTOR,CHIP 10K 1/16W(1608)
R1090	1-218-680-11	s	RESISTOR,CHIP 330 1/16W(1608)
R1091	1-218-700-11	s	RESISTOR,CHIP 2.2K 1/16W(1608)
R1093	1-218-722-11	s	RESISTOR, CHIP 18K 1/16W 1608
R1094	1-218-692-11	s	RESISTOR,CHIP 1.0K 1/16W(1608)
R1095	1-219-493-11	s	RESISTOR, METAL FILM CHIP 22
R1096	1-219-493-11	s	RESISTOR, METAL FILM CHIP 22
R1108	1-216-864-11	s	CONDUCTOR, CHIP (1608)
R1109	1-216-864-11	s	CONDUCTOR, CHIP (1608)
R1110 *2	deleted		
*1	1-216-864-11	s	CONDUCTOR, CHIP (1608)
R1111 *2	deleted		
*1	1-216-864-11	s	CONDUCTOR, CHIP (1608)

(APR-52A BOARD for PLAYER)

Ref. No. or Q'ty	Part No.	SP	Description
R1204	1-216-864-11	s	CONDUCTOR, CHIP (1608)
R1205	1-216-864-11	s	CONDUCTOR, CHIP (1608)
R1206	1-216-864-11	s	CONDUCTOR, CHIP (1608)
R1207	1-216-864-11	s	CONDUCTOR, CHIP (1608)
R1211	1-218-716-11	s	RESISTOR,CHIP 10K 1/16W(1608)
R1212	1-218-692-11	s	RESISTOR,CHIP 1.0K 1/16W(1608)
R1302 *2	deleted		
*1	1-218-716-11	s	RESISTOR,CHIP 10K 1/16W(1608)
R1400	1-216-864-11	s	CONDUCTOR, CHIP (1608)
R1401	1-216-864-11	s	CONDUCTOR, CHIP (1608)
R1402	1-216-864-11	s	CONDUCTOR, CHIP (1608)
R1403	1-216-864-11	s	CONDUCTOR, CHIP (1608)
R1405	1-216-864-11	s	CONDUCTOR, CHIP (1608)
R1406 *2	deleted		
*1	1-216-864-11	s	CONDUCTOR, CHIP (1608)
R1407 *2	1-216-864-11	s	CONDUCTOR, CHIP (1608)
R1408	1-216-864-11	s	CONDUCTOR, CHIP (1608)
R1410 *2	1-218-652-11	s	RESISTOR,CHIP 22 1/10W (1608)
R1411	1-218-716-11	s	RESISTOR,CHIP 10K 1/16W(1608)
R1412	1-216-864-11	s	CONDUCTOR, CHIP (1608)
R1413	1-216-864-11	s	CONDUCTOR, CHIP (1608)
R1501 *2	1-218-692-11	s	RESISTOR,CHIP 1.0K 1/16W(1608)
*1	1-216-864-11	s	CONDUCTOR, CHIP (1608)
R1504 *2	1-218-692-11	s	RESISTOR,CHIP 1.0K 1/16W(1608)
*1	1-216-864-11	s	CONDUCTOR, CHIP (1608)
R1505 *2	1-218-692-11	s	RESISTOR,CHIP 1.0K 1/16W(1608)
R1507	1-218-652-11	s	RESISTOR,CHIP 22 1/10W (1608)
R1509	1-218-692-11	s	RESISTOR,CHIP 1.0K 1/16W(1608)
R1600	1-218-676-11	s	RESISTOR,CHIP 220 1/16W(1608)
R1601	1-218-716-11	s	RESISTOR,CHIP 10K 1/16W(1608)
R1602	1-218-716-11	s	RESISTOR,CHIP 10K 1/16W(1608)
R1603	1-218-716-11	s	RESISTOR,CHIP 10K 1/16W(1608)
R1604	1-218-716-11	s	RESISTOR,CHIP 10K 1/16W(1608)
R1605	1-218-716-11	s	RESISTOR,CHIP 10K 1/16W(1608)
R1606	1-218-676-11	s	RESISTOR,CHIP 220 1/16W(1608)
R1607	1-218-716-11	s	RESISTOR,CHIP 10K 1/16W(1608)
R1608	1-218-660-91	s	RESISTOR,CHIP 47 1/16W (1608)
R1609	1-218-660-91	s	RESISTOR,CHIP 47 1/16W (1608)
R1610 *2	deleted		
*1	1-218-752-11	s	RESISTOR,CHIP 330K 1/16W(1608)
R1611 *2	deleted		
*1	1-218-700-11	s	RESISTOR,CHIP 2.2K 1/16W(1608)
R1612 *2	1-216-864-11	s	CONDUCTOR, CHIP (1608)
R1613 *2	1-218-692-11	s	RESISTOR,CHIP 1.0K 1/16W(1608)
R1702	1-218-740-11	s	RESISTOR,CHIP 100K 1/16W(1608)
R1704	1-216-864-11	s	CONDUCTOR, CHIP (1608)
R1707	1-218-752-11	s	RESISTOR,CHIP 330K 1/16W(1608)
R1711	1-216-864-11	s	CONDUCTOR, CHIP (1608)
R1712	1-218-696-11	s	RESISTOR,CHIP 1.5K 1/16W(1608)
R1713	1-218-744-11	s	RESISTOR,CHIP 150K 1/16W
R1717	1-218-696-11	s	RESISTOR,CHIP 1.5K 1/16W(1608)
R1719	1-218-740-11	s	RESISTOR,CHIP 100K 1/16W(1608)
R1722 *2	1-218-728-11	s	RESISTOR,CHIP 33K 1/16W
R1723 *2	1-218-752-11	s	RESISTOR,CHIP 330K 1/16W(1608)
R1724 *2	1-218-684-11	s	RESISTOR,CHIP 470 1/16W (1608)
R1725 *2	1-218-684-11	s	RESISTOR,CHIP 470 1/16W (1608)
R1726	1-218-676-11	s	RESISTOR,CHIP 220 1/16W(1608)
R1727 *2	1-218-704-11	s	RESISTOR,CHIP 3.3K 1/16W(1608)
*1	1-216-864-11	s	CONDUCTOR, CHIP (1608)
R1728	1-218-704-11	s	RESISTOR,CHIP 3.3K 1/16W(1608)

(APR-52A BOARD for PLAYER)

Ref. No. or Q'ty	Part No.	SP	Description
R1729	1-218-722-11	s	RESISTOR, CHIP 18K 1/16W 1608
R1730	1-218-724-11	s	RESISTOR,CHIP 22K 1/16W(1608)
R1731 *2	1-218-716-11	s	RESISTOR,CHIP 10K 1/16W(1608)
R1732 *2	1-218-740-11	s	RESISTOR,CHIP 100K 1/16W(1608)
R1733 *2	1-218-704-11	s	RESISTOR,CHIP 3.3K 1/16W(1608)
R1800 *2	1-218-752-11	s	RESISTOR,CHIP 330K 1/16W(1608)
*1	1-218-750-11	s	RESISTOR,CHIP 270K 1/16W(1608)
R1801 *2	1-218-752-11	s	RESISTOR,CHIP 330K 1/16W(1608)
*1	1-218-750-11	s	RESISTOR,CHIP 270K 1/16W(1608)
R1802 *2	1-218-736-11	s	RESISTOR,CHIP 68K 1/16W(1608)
*1	1-218-752-11	s	RESISTOR,CHIP 330K 1/16W(1608)
R1803 *2	1-218-736-11	s	RESISTOR,CHIP 68K 1/16W(1608)
*1	1-218-752-11	s	RESISTOR,CHIP 330K 1/16W(1608)
R1804	1-218-716-11	s	RESISTOR,CHIP 10K 1/16W(1608)
R1805	1-218-716-11	s	RESISTOR,CHIP 10K 1/16W(1608)
R1806	1-218-708-11	s	RESISTOR,CHIP 4.7K 1/16W(1608)
R1807	1-218-708-11	s	RESISTOR,CHIP 4.7K 1/16W(1608)
R1808	1-218-716-11	s	RESISTOR,CHIP 10K 1/16W(1608)
R1809	1-218-716-11	s	RESISTOR,CHIP 10K 1/16W(1608)
R1810	1-218-718-11	s	RESISTOR CHIP 12K 1/16W (1608)
R1811	1-218-718-11	s	RESISTOR CHIP 12K 1/16W (1608)
R1812	1-218-724-11	s	RESISTOR,CHIP 22K 1/16W(1608)
R1813	1-218-710-11	s	RESISTOR,CHIP 5.6K 1/16W(1608)
R1814	1-218-724-11	s	RESISTOR,CHIP 22K 1/16W(1608)
R1815	1-218-710-11	s	RESISTOR,CHIP 5.6K 1/16W(1608)
RB500	1-239-409-11	s	RESISTOR NETWORK 47 (1608)
RB700	1-239-409-11	s	RESISTOR NETWORK 47 (1608)
RB900	1-239-409-11	s	RESISTOR NETWORK 47 (1608)
RB1100*2	1-233-412-11	s	RESISTOR,CHIP NETWORK 1K
*1	1-236-904-11	s	RESISTOR NETWORK 1K (1608)
RB1101*2	1-233-575-11	s	RES, CHIP NETWORK 22
*1	1-239-621-11	s	NETWORK RESISTOR 22 (1608)
RB1102*2	1-233-575-11	s	RES, CHIP NETWORK 22
*1	1-239-621-11	s	NETWORK RESISTOR 22 (1608)
RB1400	1-233-270-11	s	RESISTOR, NETWORK (8 GANG) 10K
RB1401	1-233-270-11	s	RESISTOR, NETWORK (8 GANG) 10K
RB1402	1-233-270-11	s	RESISTOR, NETWORK (8 GANG) 10K
RB1403	1-233-270-11	s	RESISTOR, NETWORK (8 GANG) 10K
RB1404	1-233-270-11	s	RESISTOR, NETWORK (8 GANG) 10K
RB1405	1-233-270-11	s	RESISTOR, NETWORK (8 GANG) 10K
RB1406	1-233-575-11	s	RES, CHIP NETWORK 22
	1-239-621-11	s	NETWORK RESISTOR 22 (1608)
RB1407	1-233-477-11	s	NETWORK, RES (8 GANG) 1K
RB1408	1-233-270-11	s	RESISTOR, NETWORK (8 GANG) 10K
RB1409*2	1-233-810-21	s	RES, NETWORK 100K (3216)
*1	1-236-907-11	s	RESISTOR BLOCK 100K (1608)
RB1410*2	1-233-575-11	s	RES, CHIP NETWORK 22
*1	1-239-621-11	s	NETWORK RESISTOR 22 (1608)
RB1411	1-233-477-11	s	NETWORK, RES (8 GANG) 1K
RB1412	1-233-477-11	s	NETWORK, RES (8 GANG) 1K
RB1413	1-233-270-11	s	RESISTOR, NETWORK (8 GANG) 10K
RB1414*2	1-233-575-11	s	RES, CHIP NETWORK 22
*1	1-239-621-11	s	NETWORK RESISTOR 22 (1608)
RB1415*2	1-233-575-11	s	RES, CHIP NETWORK 22
*1	1-239-621-11	s	NETWORK RESISTOR 22 (1608)
RB1416*2	1-233-412-11	s	RESISTOR,CHIP NETWORK 1K
*1	1-236-904-11	s	RESISTOR NETWORK 1K (1608)
RB1417*2	1-233-575-11	s	RES, CHIP NETWORK 22
*1	1-239-621-11	s	NETWORK RESISTOR 22 (1608)
RB1418*2	1-233-575-11	s	RES, CHIP NETWORK 22
*1	1-239-621-11	s	NETWORK RESISTOR 22 (1608)

(APR-52A BOARD for PLAYER)

Ref. No. or Q'ty	Part No.	SP	Description
RB1419	1-233-477-11	s	NETWORK, RES (8 GANG) 1K
RB1420*2	1-233-412-11	s	RESISTOR,CHIP NETWORK 1K
*1	1-236-904-11	s	RESISTOR NETWORK 1K (1608)
RB1421	1-233-477-11	s	NETWORK, RES (8 GANG) 1K
RB1422	1-233-270-11	s	RESISTOR, NETWORK (8 GANG) 10K
RB1500*2	1-233-576-11	s	RESISTOR,CHIP NETWORK 100
*1	1-239-412-11	s	NETWORK, RESISTOR 100 (1608)
RB1501*2	1-233-576-11	s	RESISTOR,CHIP NETWORK 100
*1	1-239-412-11	s	NETWORK, RESISTOR 100 (1608)
RB1502*2	1-233-576-11	s	RESISTOR,CHIP NETWORK 100
*2	1-239-412-11	s	NETWORK, RESISTOR 100 (1608)
RB1503*2	1-233-576-11	s	RESISTOR,CHIP NETWORK 100
*1	1-239-412-11	s	NETWORK, RESISTOR 100 (1608)
RB1504*2	1-233-576-11	s	RESISTOR,CHIP NETWORK 100
*1	1-239-412-11	s	NETWORK, RESISTOR 100 (1608)
RB1505*2	1-233-576-11	s	RESISTOR,CHIP NETWORK 100
*1	1-239-412-11	s	NETWORK, RESISTOR 100 (1608)
RB1506*2	1-233-576-11	s	RESISTOR,CHIP NETWORK 100
*1	1-239-412-11	s	NETWORK, RESISTOR 100 (1608)
RB1507*2	1-234-378-11	s	RES, NETWORK 10KX4 (1005)
*1	1-236-908-11	s	RESISTOR,NETWORK 10K (3216)
RB1508	1-233-665-11	s	NETWORK, RES (8 GANG) 47K
RB1509*2	1-233-575-11	s	RES, CHIP NETWORK 22
*1	1-239-621-11	s	NETWORK RESISTOR 22 (1608)
RB1510*2	1-233-575-11	s	RES, CHIP NETWORK 22
*1	1-239-621-11	s	NETWORK RESISTOR 22 (1608)
RB1511	1-233-665-11	s	NETWORK, RES (8 GANG) 47K
RB1512	1-233-665-11	s	NETWORK, RES (8 GANG) 47K
RB1513	1-233-665-11	s	NETWORK, RES (8 GANG) 47K
RB1514	1-233-665-11	s	NETWORK, RES (8 GANG) 47K
RB1515*2	1-233-575-11	s	RES, CHIP NETWORK 22
*1	1-239-621-11	s	NETWORK RESISTOR 22 (1608)
RB1516*2	1-233-575-11	s	RES, CHIP NETWORK 22
*1	1-239-621-11	s	NETWORK RESISTOR 22 (1608)
RB1517*2	1-233-575-11	s	RES, CHIP NETWORK 22
*1	1-239-621-11	s	NETWORK RESISTOR 22 (1608)
RB1518*2	1-233-575-11	s	RES, CHIP NETWORK 22
*1	1-239-621-11	s	NETWORK RESISTOR 22 (1608)
RB1519*2	1-233-575-11	s	RES, CHIP NETWORK 22
*1	1-239-621-11	s	NETWORK RESISTOR 22 (1608)
RB1520*2	1-233-575-11	s	RES, CHIP NETWORK 22
*1	1-239-621-11	s	NETWORK RESISTOR 22 (1608)
RB1521*2	1-234-379-11	s	RESISTOR,NETWORK 22KX4 (1005)
RB1522*2	1-234-379-11	s	RESISTOR,NETWORK 22KX4 (1005)
RB1600*2	1-233-411-11	s	RESISTOR,CHIP NETWORK 220/3216
*1	1-239-416-11	s	NETWORK,RESISTOR 220 (1608)
RB1601*2	1-233-411-11	s	RESISTOR,CHIP NETWORK 220/3216
*1	1-239-416-11	s	NETWORK,RESISTOR 220 (1608)
RB1602*2	1-233-411-11	s	RESISTOR,CHIP NETWORK 220/3216
*1	1-239-416-11	s	NETWORK,RESISTOR 220 (1608)
RB1700*2	1-233-577-11	s	RESISTOR, CHIP NETWORK 470
*1	1-239-419-11	s	NETWORK RESISTOR 470 (1608)
RB1702*2	1-234-379-11	s	RESISTOR,NETWORK 22KX4 (1005)
RV500 *2	1-225-792-21	s	RES, ADJ, CERMET 10K
*1	1-237-036-11	s	RESISTOR, ADJ,CERMET 10K
RV501 *2	1-225-787-21	s	RES, ADJ, CERMET 500
*1	1-237-032-11	s	RESISTOR,ADJ,CERMET 500
RV600 *2	1-225-792-21	s	RES, ADJ, CERMET 10K
*1	1-237-036-11	s	RESISTOR, ADJ,CERMET 10K
RV601 *2	1-225-787-21	s	RES, ADJ, CERMET 500
*1	1-237-032-11	s	RESISTOR,ADJ,CERMET 500
RV700 *2	1-225-792-21	s	RES, ADJ, CERMET 10K
*1	1-237-036-11	s	RESISTOR, ADJ,CERMET 10K

(APR-52A BOARD for PLAYER)

Ref. No. or Q'ty	Part No.	SP	Description
RV701 *2	1-225-787-21	s	RES, ADJ, CERMET 500
*1	1-237-032-11	s	RESISTOR,ADJ,CERMET 500
RV800 *2	1-225-792-21	s	RES, ADJ, CERMET 10K
*1	1-237-036-11	s	RESISTOR, ADJ,CERMET 10K
RV801 *2	1-225-787-21	s	RES, ADJ, CERMET 500
*1	1-237-032-11	s	RESISTOR,ADJ,CERMET 500
RV900 *2	1-225-792-21	s	RES, ADJ, CERMET 10K
*1	1-237-036-11	s	RESISTOR, ADJ,CERMET 10K
RV901 *2	1-225-787-21	s	RES, ADJ, CERMET 500
*1	1-237-032-11	s	RESISTOR,ADJ,CERMET 500
RV1000*2	1-225-792-21	s	RES, ADJ, CERMET 10K
*1	1-237-036-11	s	RESISTOR, ADJ,CERMET 10K
RV1001*2	1-225-787-21	s	RES, ADJ, CERMET 500
*1	1-237-032-11	s	RESISTOR,ADJ,CERMET 500
RY500	1-755-379-11	s	RELAY
RY600	1-755-379-11	s	RELAY
RY700	1-755-379-11	s	RELAY
RY800	1-755-379-11	s	RELAY
RY900	1-755-379-11	s	RELAY
RY1000	1-755-379-11	s	RELAY
S101	1-692-270-41	s	SWITCH, SLIDE
S201	1-692-270-41	s	SWITCH, SLIDE
S301	1-692-270-41	s	SWITCH, SLIDE
S401	1-692-270-41	s	SWITCH, SLIDE
S500	1-692-270-41	s	SWITCH, SLIDE
S501	1-692-270-41	s	SWITCH, SLIDE
S600	1-692-270-41	s	SWITCH, SLIDE
S601	1-692-270-41	s	SWITCH, SLIDE
S700	1-692-270-41	s	SWITCH, SLIDE
S701	1-692-270-41	s	SWITCH, SLIDE
S800	1-692-270-41	s	SWITCH, SLIDE
S801	1-692-270-41	s	SWITCH, SLIDE
S900	1-692-270-41	s	SWITCH, SLIDE
S901	1-692-881-41	s	SWITCH, SLIDE
S902	1-692-270-41	s	SWITCH, SLIDE
S1000	1-692-270-41	s	SWITCH, SLIDE
S1001	1-692-881-41	s	SWITCH, SLIDE
S1002	1-692-270-41	s	SWITCH, SLIDE
TP101	1-535-877-22	s	CHIP,CHECKER (TEST POINT)
TP201	1-535-877-22	s	CHIP,CHECKER (TEST POINT)
TP301	1-535-877-22	s	CHIP,CHECKER (TEST POINT)
TP401	1-535-877-22	s	CHIP,CHECKER (TEST POINT)
TP500	1-535-877-22	s	CHIP,CHECKER (TEST POINT)
TP600	1-535-877-22	s	CHIP,CHECKER (TEST POINT)
TP700	1-535-877-22	s	CHIP,CHECKER (TEST POINT)
TP800	1-535-877-22	s	CHIP,CHECKER (TEST POINT)
TP900	1-535-877-22	s	CHIP,CHECKER (TEST POINT)
TP1000	1-535-877-22	s	CHIP,CHECKER (TEST POINT)
X1200	1-781-809-21	s	OSCILLATOR, CRYSTAL (SMD)

AU-272 BOARD [SUFFIX 12]

[Lot No. 261 - 375] HDW-M2000/P, M2100/P, A2100
MSW-M2000/P, A2000/P, M2100/P

Ref. No. or Q'ty	Part No.	SP	Description
1pc	A-8324-886-A	o	MOUNTED CIRCUIT BOARD, AU-272
1pc	3-179-085-11	s	LEVER(L),PRINTED C.BOARD
C100	1-164-230-11	s	CAPACITOR,CERAMIC 220PF/50V
C101	1-162-959-11	s	CAPACITOR,CERAMIC 330PF/50V SL
C102	1-162-925-11	s	CAPACITOR,CERAMIC 68PF/50V CH
C103	1-115-414-11	s	CAPACITOR,CHIP CERAMIC 820PF
C104	1-164-230-11	s	CAPACITOR,CERAMIC 220PF/50V
C105	1-164-690-11	s	CAPACITOR ,CERAMIC 2200PF CH
C106	1-115-412-11	s	CAPACITOR,CERAMIC 680PF/25V CH
C107	1-126-394-11	s	CAPACITOR,ELECT 10MF/16V(CHIP)
C108	1-127-955-11	s	CAPACITOR,FILM 0.068MF (3225)
C109	1-162-919-11	s	CAPACITOR,CERAMIC 22PF/50V CH
C110	1-162-919-11	s	CAPACITOR,CERAMIC 22PF/50V CH
C111	1-115-154-11	s	CAPACITOR ELECT 10MF/16V(BP)
C112	1-115-154-11	s	CAPACITOR ELECT 10MF/16V(BP)
C200	1-164-230-11	s	CAPACITOR,CERAMIC 220PF/50V
C201	1-162-959-11	s	CAPACITOR,CERAMIC 330PF/50V SL
C202	1-162-925-11	s	CAPACITOR,CERAMIC 68PF/50V CH
C203	1-115-414-11	s	CAPACITOR,CHIP CERAMIC 820PF
C204	1-164-230-11	s	CAPACITOR,CERAMIC 220PF/50V
C205	1-164-690-11	s	CAPACITOR ,CERAMIC 2200PF CH
C206	1-115-412-11	s	CAPACITOR,CERAMIC 680PF/25V CH
C207	1-126-394-11	s	CAPACITOR,ELECT 10MF/16V(CHIP)
C208	1-127-955-11	s	CAPACITOR,FILM 0.068MF (3225)
C209	1-128-451-11	s	CAPACITOR ELECT 22MF/16V(105C)
C210	1-128-451-11	s	CAPACITOR ELECT 22MF/16V(105C)
C211	1-162-919-11	s	CAPACITOR,CERAMIC 22PF/50V CH
C212	1-162-919-11	s	CAPACITOR,CERAMIC 22PF/50V CH
C213	1-115-154-11	s	CAPACITOR ELECT 10MF/16V(BP)
C214	1-115-154-11	s	CAPACITOR ELECT 10MF/16V(BP)
C300	1-107-418-11	s	CAPACITOR,CHIP ELECT 10MF 35V
C301	1-107-418-11	s	CAPACITOR,CHIP ELECT 10MF 35V
C302	1-107-418-11	s	CAPACITOR,CHIP ELECT 10MF 35V
C303	1-107-418-11	s	CAPACITOR,CHIP ELECT 10MF 35V
C304	1-128-451-11	s	CAPACITOR ELECT 22MF/16V(105C)
C305	1-128-451-11	s	CAPACITOR ELECT 22MF/16V(105C)
C306	1-107-418-11	s	CAPACITOR,CHIP ELECT 10MF 35V
C307	1-107-418-11	s	CAPACITOR,CHIP ELECT 10MF 35V
C308	1-107-418-11	s	CAPACITOR,CHIP ELECT 10MF 35V
C309	1-107-418-11	s	CAPACITOR,CHIP ELECT 10MF 35V
C310	1-126-394-11	s	CAPACITOR,ELECT 10MF/16V(CHIP)
C311	1-107-418-11	s	CAPACITOR,CHIP ELECT 10MF 35V
C500	1-107-826-11	s	CAPACITOR,CHIP CERAMIC 0.1MF
C501	1-107-826-11	s	CAPACITOR,CHIP CERAMIC 0.1MF
C502	1-107-826-11	s	CAPACITOR,CHIP CERAMIC 0.1MF
C503	1-107-826-11	s	CAPACITOR,CHIP CERAMIC 0.1MF
C504	1-165-176-11	s	CAPACITOR,CERAMIC 47000PF/16V
C505	1-128-451-11	s	CAPACITOR ELECT 22MF/16V(105C)
C506	1-107-826-11	s	CAPACITOR,CHIP CERAMIC 0.1MF
C507	1-162-925-11	s	CAPACITOR,CERAMIC 68PF/50V CH
C508	1-162-927-11	s	CAPACITOR,CERAMIC 100PF/50V CH
C509	1-162-959-11	s	CAPACITOR,CERAMIC 330PF/50V SL
C510	1-162-925-11	s	CAPACITOR,CERAMIC 68PF/50V CH
C511	1-107-826-11	s	CAPACITOR,CHIP CERAMIC 0.1MF
C512	1-107-418-11	s	CAPACITOR,CHIP ELECT 10MF 35V
C513	1-107-826-11	s	CAPACITOR,CHIP CERAMIC 0.1MF

(AU-272 BOARD [SUFFIX 12])

Ref. No. or Q'ty	Part No.	SP	Description
C514	1-107-826-11	s	CAPACITOR,CHIP CERAMIC 0.1MF
C515	1-107-826-11	s	CAPACITOR,CHIP CERAMIC 0.1MF
C516	1-107-826-11	s	CAPACITOR,CHIP CERAMIC 0.1MF
C517	1-107-418-11	s	CAPACITOR,CHIP ELECT 10MF 35V
C518	1-107-418-11	s	CAPACITOR,CHIP ELECT 10MF 35V
C519	1-107-826-11	s	CAPACITOR,CHIP CERAMIC 0.1MF
C520	1-107-826-11	s	CAPACITOR,CHIP CERAMIC 0.1MF
C521	1-107-826-11	s	CAPACITOR,CHIP CERAMIC 0.1MF
C522	1-107-826-11	s	CAPACITOR,CHIP CERAMIC 0.1MF
C523	1-107-826-11	s	CAPACITOR,CHIP CERAMIC 0.1MF
C524	1-107-826-11	s	CAPACITOR,CHIP CERAMIC 0.1MF
C525	1-128-451-11	s	CAPACITOR ELECT 22MF/16V(105C)
C526	1-128-451-11	s	CAPACITOR ELECT 22MF/16V(105C)
C527	1-107-826-11	s	CAPACITOR,CHIP CERAMIC 0.1MF
C528	1-107-826-11	s	CAPACITOR,CHIP CERAMIC 0.1MF
C550	1-107-826-11	s	CAPACITOR,CHIP CERAMIC 0.1MF
C551	1-115-412-11	s	CAPACITOR,CERAMIC 680PF/25V CH
C552	1-162-927-11	s	CAPACITOR,CERAMIC 100PF/50V CH
C553	1-107-826-11	s	CAPACITOR,CHIP CERAMIC 0.1MF
C554	1-107-826-11	s	CAPACITOR,CHIP CERAMIC 0.1MF
C555	1-162-923-11	s	CAPACITOR,CERAMIC 47PF/50V CH
C556	1-162-959-11	s	CAPACITOR,CERAMIC 330PF/50V SL
C557	1-126-394-11	s	CAPACITOR,ELECT 10MF/16V(CHIP)
C558	1-107-826-11	s	CAPACITOR,CHIP CERAMIC 0.1MF
C559	1-127-956-11	s	CAPACITOR,CHIP FILM 0.1MF
C560	1-107-826-11	s	CAPACITOR,CHIP CERAMIC 0.1MF
C561	1-107-826-11	s	CAPACITOR,CHIP CERAMIC 0.1MF
C562	1-107-826-11	s	CAPACITOR,CHIP CERAMIC 0.1MF
C563	1-128-451-11	s	CAPACITOR ELECT 22MF/16V(105C)
C564	1-107-826-11	s	CAPACITOR,CHIP CERAMIC 0.1MF
C565	1-164-315-11	s	CAPACITOR,CERAMIC 470PF/50V CH
C566	1-162-920-11	s	CAPACITOR,CERAMIC 27PF/50V CH
C567	1-107-826-11	s	CAPACITOR,CHIP CERAMIC 0.1MF
C568	1-107-826-11	s	CAPACITOR,CHIP CERAMIC 0.1MF
C569	1-107-826-11	s	CAPACITOR,CHIP CERAMIC 0.1MF
C570	1-107-826-11	s	CAPACITOR,CHIP CERAMIC 0.1MF
C571	1-165-176-11	s	CAPACITOR,CERAMIC 47000PF/16V
C600	1-165-176-11	s	CAPACITOR,CERAMIC 47000PF/16V
C601	1-165-176-11	s	CAPACITOR,CERAMIC 47000PF/16V
C602	1-165-176-11	s	CAPACITOR,CERAMIC 47000PF/16V
C603	1-165-176-11	s	CAPACITOR,CERAMIC 47000PF/16V
C604	1-115-412-11	s	CAPACITOR,CERAMIC 680PF/25V CH
C605	1-135-072-21	s	CAPACITOR,TANTALUM 0.22MF/35V
C606	1-127-950-11	s	CAPACITOR,CHIP FILM 0.01MF
C607	1-107-826-11	s	CAPACITOR,CHIP CERAMIC 0.1MF
C608	1-165-176-11	s	CAPACITOR,CERAMIC 47000PF/16V
C609	1-107-826-11	s	CAPACITOR,CHIP CERAMIC 0.1MF
C610	1-165-176-11	s	CAPACITOR,CERAMIC 47000PF/16V
C611	1-126-394-11	s	CAPACITOR,ELECT 10MF/16V(CHIP)
C612	1-164-690-11	s	CAPACITOR ,CERAMIC 2200PF CH
C613	1-115-417-11	s	CAP,CERAMIC 2700PF/50V (2012)
C614	1-164-217-11	s	CAPACITOR,CERAMIC 150PF/50V CH
C615	1-164-690-11	s	CAPACITOR ,CERAMIC 2200PF CH
C616	1-107-826-11	s	CAPACITOR,CHIP CERAMIC 0.1MF
C617	1-164-739-11	s	CAPACITOR CERAMIC 560PF (1608)
C618	1-107-687-11	s	CAPACITOR TANTALUM 3.3MF/20V
C619	1-165-176-11	s	CAPACITOR,CERAMIC 47000PF/16V
C620	1-107-689-21	s	CAPACITOR,TANTALUM 1MF/35V
C621	1-127-948-11	s	CAPACITOR,FILM 0.0047MF (2012)

(AU-272 BOARD [SUFFIX 12])

Ref. No. or Q'ty	Part No.	SP	Description
C622	1-127-950-11	s	CAPACITOR,CHIP FILM 0.01MF
C623	1-164-315-11	s	CAPACITOR,CERAMIC 470PF/50V CH
C624	1-128-451-11	s	CAPACITOR ELECT 22MF/16V(105C)
C625	1-126-394-11	s	CAPACITOR,ELECT 10MF/16V(CHIP)
C626	1-164-690-11	s	CAPACITOR ,CERAMIC 2200PF CH
C627	1-115-417-11	s	CAP,CERAMIC 2700PF/50V (2012)
C628	1-164-217-11	s	CAPACITOR,CERAMIC 150PF/50V CH
C629	1-164-690-11	s	CAPACITOR ,CERAMIC 2200PF CH
C630	1-107-826-11	s	CAPACITOR,CHIP CERAMIC 0.1MF
C631	1-164-739-11	s	CAPACITOR CERAMIC 560PF (1608)
C632	1-107-687-11	s	CAPACITOR TANTALUM 3.3MF/20V
C633	1-107-689-21	s	CAPACITOR,TANTALUM 1MF/35V
C634	1-165-176-11	s	CAPACITOR,CERAMIC 47000PF/16V
C635	1-127-948-11	s	CAPACITOR,FILM 0.0047MF (2012)
C636	1-127-950-11	s	CAPACITOR,CHIP FILM 0.01MF
C637	1-164-315-11	s	CAPACITOR,CERAMIC 470PF/50V CH
C638	1-128-451-11	s	CAPACITOR ELECT 22MF/16V(105C)
C639	1-137-910-11	s	CAPACITOR,TANTALUM ELECT 10MF/16V
C640	1-137-910-11	s	CAPACITOR,TANTALUM ELECT 10MF/16V
C641	1-162-919-11	s	CAPACITOR,CERAMIC 22PF/50V CH
C642	1-128-451-11	s	CAPACITOR ELECT 22MF/16V(105C)
C643	1-128-590-11	s	CAPACITOR ERECT 100MF/6.3V(105
C644	1-119-751-11	s	CAPACITOR,TANTALUM 22MF/16V
C645	1-137-910-11	s	CAPACITOR,TANTALUM ELECT 10MF/16V
C646	1-164-230-11	s	CAPACITOR,CERAMIC 220PF/50V
C647	1-126-391-11	s	CAPACITOR ELECT 47MF/6.3V(105)
C648	1-104-558-11	s	CAPACITOR,CHIP FILM 0.039MF
C649	1-127-948-11	s	CAPACITOR,FILM 0.0047MF (2012)
C650	1-162-910-11	s	CAPACITOR,CERAMIC 5PF/50V 1608
C651	1-137-910-11	s	CAPACITOR,TANTALUM ELECT 10MF/16V
C652	1-119-751-11	s	CAPACITOR,TANTALUM 22MF/16V
C653	1-104-550-11	s	CAPACITOR FILM 0.0082MF/16V
C655	1-115-412-11	s	CAPACITOR,CERAMIC 680PF/25V CH
C656	1-137-910-11	s	CAPACITOR,TANTALUM ELECT 10MF/16V
C657	1-135-072-21	s	CAPACITOR,TANTALUM 0.22MF/35V
C658	1-126-394-11	s	CAPACITOR,ELECT 10MF/16V(CHIP)
C659	1-162-919-11	s	CAPACITOR,CERAMIC 22PF/50V CH
C660	1-162-919-11	s	CAPACITOR,CERAMIC 22PF/50V CH
C661	1-115-154-11	s	CAPACITOR ELECT 10MF/16V(BP)
C662	1-115-154-11	s	CAPACITOR ELECT 10MF/16V(BP)
C700	1-165-176-11	s	CAPACITOR,CERAMIC 47000PF/16V
C701	1-165-176-11	s	CAPACITOR,CERAMIC 47000PF/16V
C702	1-115-412-11	s	CAPACITOR,CERAMIC 680PF/25V CH
C703	1-135-072-21	s	CAPACITOR,TANTALUM 0.22MF/35V
C704	1-135-149-21	s	CAPACITOR TANTALUM 2.2MF/10V
C705	1-165-176-11	s	CAPACITOR,CERAMIC 47000PF/16V
C706	1-165-176-11	s	CAPACITOR,CERAMIC 47000PF/16V
C707	1-164-230-11	s	CAPACITOR,CERAMIC 220PF/50V
C708	1-126-394-11	s	CAPACITOR,ELECT 10MF/16V(CHIP)
C709	1-164-690-11	s	CAPACITOR ,CERAMIC 2200PF CH
C710	1-115-417-11	s	CAP,CERAMIC 2700PF/50V (2012)
C711	1-164-217-11	s	CAPACITOR,CERAMIC 150PF/50V CH
C712	1-164-690-11	s	CAPACITOR ,CERAMIC 2200PF CH
C713	1-107-826-11	s	CAPACITOR,CHIP CERAMIC 0.1MF
C714	1-164-739-11	s	CAPACITOR CERAMIC 560PF (1608)
C715	1-107-687-11	s	CAPACITOR TANTALUM 3.3MF/20V
C716	1-165-176-11	s	CAPACITOR,CERAMIC 47000PF/16V
C717	1-107-689-21	s	CAPACITOR,TANTALUM 1MF/35V
C718	1-127-948-11	s	CAPACITOR,FILM 0.0047MF (2012)

(AU-272 BOARD [SUFFIX 12])

Ref. No. or Q'ty	Part No.	SP	Description
C719	1-127-950-11	s	CAPACITOR,CHIP FILM 0.01MF
C720	1-164-315-11	s	CAPACITOR,CERAMIC 470PF/50V CH
C721	1-128-451-11	s	CAPACITOR ELECT 22MF/16V(105C)
C722	1-126-394-11	s	CAPACITOR,ELECT 10MF/16V(CHIP)
C723	1-164-690-11	s	CAPACITOR ,CERAMIC 2200PF CH
C724	1-115-417-11	s	CAP,CERAMIC 2700PF/50V (2012)
C725	1-164-217-11	s	CAPACITOR,CERAMIC 150PF/50V CH
C726	1-164-690-11	s	CAPACITOR ,CERAMIC 2200PF CH
C727	1-107-826-11	s	CAPACITOR,CHIP CERAMIC 0.1MF
C728	1-164-739-11	s	CAPACITOR CERAMIC 560PF (1608)
C729	1-107-687-11	s	CAPACITOR TANTALUM 3.3MF/20V
C730	1-107-689-21	s	CAPACITOR,TANTALUM 1MF/35V
C731	1-165-176-11	s	CAPACITOR,CERAMIC 47000PF/16V
C732	1-127-950-11	s	CAPACITOR,CHIP FILM 0.01MF
C733	1-127-948-11	s	CAPACITOR,FILM 0.0047MF (2012)
C734	1-164-315-11	s	CAPACITOR,CERAMIC 470PF/50V CH
C735	1-128-451-11	s	CAPACITOR ELECT 22MF/16V(105C)
C736	1-137-910-11	s	CAPACITOR,TANTALUM ELECT 10MF/16V
C737	1-137-910-11	s	CAPACITOR,TANTALUM ELECT 10MF/16V
C738	1-162-919-11	s	CAPACITOR,CERAMIC 22PF/50V CH
C739	1-128-451-11	s	CAPACITOR ELECT 22MF/16V(105C)
C740	1-119-751-11	s	CAPACITOR,TANTALUM 22MF/16V
C741	1-137-910-11	s	CAPACITOR,TANTALUM ELECT 10MF/16V
C742	1-164-230-11	s	CAPACITOR,CERAMIC 220PF/50V
C743	1-104-558-11	s	CAPACITOR,CHIP FILM 0.039MF
C744	1-126-391-11	s	CAPACITOR ELECT 47MF/6.3V(105)
C745	1-127-948-11	s	CAPACITOR,FILM 0.0047MF (2012)
C746	1-162-910-11	s	CAPACITOR,CERAMIC 5PF/50V 1608
C747	1-104-550-11	s	CAPACITOR FILM 0.0082MF/16V
C748	1-119-751-11	s	CAPACITOR,TANTALUM 22MF/16V
C749	1-137-910-11	s	CAPACITOR,TANTALUM ELECT 10MF/16V
C750	1-115-412-11	s	CAPACITOR,CERAMIC 680PF/25V CH
C751	1-137-910-11	s	CAPACITOR,TANTALUM ELECT 10MF/16V
C752	1-135-072-21	s	CAPACITOR,TANTALUM 0.22MF/35V
C753	1-128-451-11	s	CAPACITOR ELECT 22MF/16V(105C)
C754	1-107-826-11	s	CAPACITOR,CHIP CERAMIC 0.1MF
C755	1-126-394-11	s	CAPACITOR,ELECT 10MF/16V(CHIP)
C756	1-162-919-11	s	CAPACITOR,CERAMIC 22PF/50V CH
C757	1-162-919-11	s	CAPACITOR,CERAMIC 22PF/50V CH
C758	1-115-154-11	s	CAPACITOR ELECT 10MF/16V(BP)
C759	1-115-154-11	s	CAPACITOR ELECT 10MF/16V(BP)
CN1	1-691-550-11	s	PIN,CONNECTOR (3P)(SMD)(1.5MM)
CN3	1-778-262-12	o	CONNECTOR, BOARD TO BOARD 148P
CN4	1-573-290-21	s	PIN,CONNECTOR (4P)(SMD)(1.5MM)
D300	8-719-941-04	s	DIODE SB007-03CP
D301	8-719-941-04	s	DIODE SB007-03CP
D302	8-719-941-04	s	DIODE SB007-03CP
D303	8-719-941-04	s	DIODE SB007-03CP
D304	8-719-941-04	s	DIODE SB007-03CP
D500	8-719-820-41	s	DIODE 1SS302
D550	8-719-821-39	s	DIODE 1SV160 (VARI-CAP)
D600	8-719-820-41	s	DIODE 1SS302
D601	8-719-820-41	s	DIODE 1SS302
D700	8-719-404-35	s	DIODE MA141WK
D701	8-719-820-41	s	DIODE 1SS302
D702	8-719-820-41	s	DIODE 1SS302
FL500	1-234-459-11	s	FILTER, LOW PASS

(AU-272 BOARD [SUFFIX 12])

Ref. No. or Q'ty	Part No.	SP	Description
FL501	1-234-459-11	s	FILTER, LOW PASS
FL502	1-234-459-11	s	FILTER, LOW PASS
FL600	1-236-015-11	s	FILTER,BAND PASS
FL601	1-236-012-11	s	FILTER,LOW PASS
FL602	1-236-013-11	s	FILTER,LOW PASS
FL603	1-236-003-11	s	FILTER,LOW PASS
FL700	1-236-012-11	s	FILTER,LOW PASS
FL701	1-236-013-11	s	FILTER,LOW PASS
IC100	8-759-711-85	s	IC NJM4580E-D
IC101	8-759-711-85	s	IC NJM4580E-D
IC102	8-741-164-50	s	IC SBX1645-01 (HYBRID)
IC103	8-759-700-78	s	IC NJM082M
IC104	8-759-711-85	s	IC NJM4580E-D
IC200	8-759-711-85	s	IC NJM4580E-D
IC201	8-759-711-85	s	IC NJM4580E-D
IC202	8-759-711-85	s	IC NJM4580E-D
IC300	8-759-642-22	s	IC UPC29M05T-E2
IC301	8-759-539-89	s	IC LM2990SX-5.0
IC302	8-759-358-38	s	IC NJM78M05DLA(TE1)
IC303	8-759-586-98	s	IC NJM79M05DLA(TE1)
IC304	8-759-642-22	s	IC UPC29M05T-E2
IC500	8-759-112-53	s	IC UPC1663G
IC501	8-752-334-55	s	IC CXD1175AM
IC502	8-759-524-10	s	IC TC74VHC157FT (EL)
IC503	8-752-397-38	s	IC CXK1206AM
IC504	8-752-356-37	s	IC CXD102-128Q
IC505	8-752-334-64	s	IC CXD1171M
IC506	8-752-334-64	s	IC CXD1171M
IC550	8-759-491-50	s	IC TC74VHCT244AFT(EL)
IC551	8-759-523-97	s	IC TC74VHC123AFT(EL)
IC552	8-759-008-67	s	IC MC14066BF
IC553	8-759-142-20	s	IC UPC4062G2
IC554	8-759-491-46	s	IC TC74VHCT04AFT (EL)
IC555	8-759-711-85	s	IC NJM4580E-D
IC556	8-759-271-88	s	IC TC7SHU04FU
IC557	8-759-271-88	s	IC TC7SHU04FU
IC600	8-759-093-04	s	IC AN3920S
IC601	8-759-271-86	s	IC TC7SH04FU
IC602	8-759-271-84	s	IC TC7SH02FU
IC603	8-759-093-06	s	IC AN3922NS
IC604	8-759-093-06	s	IC AN3922NS
IC605	8-759-011-65	s	IC MC74HC4053F
IC606	8-752-009-90	s	IC CX20099
IC607	8-759-711-85	s	IC NJM4580E-D
IC608	8-759-711-85	s	IC NJM4580E-D
IC700	8-759-093-04	s	IC AN3920S
IC701	8-759-700-78	s	IC NJM082M
IC702	8-759-700-07	s	IC NJM2903M
IC703	8-759-093-06	s	IC AN3922NS
IC704	8-759-093-06	s	IC AN3922NS
IC705	8-759-011-65	s	IC MC74HC4053F
IC706	8-759-711-85	s	IC NJM4580E-D
L300	1-415-942-11	s	COIL, CHOKE 220UH
L301	1-415-942-11	s	COIL, CHOKE 220UH
L302	1-415-942-11	s	COIL, CHOKE 220UH
L303	1-415-942-11	s	COIL, CHOKE 220UH
L500	1-414-402-11	s	INDUCTOR (SMD) 47UH
L501	1-410-381-11	s	INDUCTOR,CHIP 10UH (3225)

(AU-272 BOARD [SUFFIX 12])

Ref. No. or Q'ty	Part No.	SP	Description
L502	1-414-402-11	s	INDUCTOR (SMD) 47UH
L503	1-414-402-11	s	INDUCTOR (SMD) 47UH
L504	1-414-402-11	s	INDUCTOR (SMD) 47UH
L505	1-414-402-11	s	INDUCTOR (SMD) 47UH
L550	1-414-402-11	s	INDUCTOR (SMD) 47UH
L600	1-410-941-21	s	CHIP INDUCTOR 560UH (4532)
L601	1-469-536-11	s	INDUCTOR,CHIP 2.7MH
L602	1-410-941-21	s	CHIP INDUCTOR 560UH (4532)
L603	1-469-536-11	s	INDUCTOR,CHIP 2.7MH
L700	1-410-941-21	s	CHIP INDUCTOR 560UH (4532)
L701	1-469-536-11	s	INDUCTOR,CHIP 2.7MH
L702	1-410-941-21	s	CHIP INDUCTOR 560UH (4532)
L703	1-469-536-11	s	INDUCTOR,CHIP 2.7MH
LV550	1-406-746-11	s	COIL, VARIABLE
PS300	⚠ 1-533-282-21	s	CIRCUIT PROTECTOR 2A (3225)
PS301	⚠ 1-533-282-21	s	CIRCUIT PROTECTOR 2A (3225)
PS302	⚠ 1-533-282-21	s	CIRCUIT PROTECTOR 2A (3225)
PS303	⚠ 1-533-282-21	s	CIRCUIT PROTECTOR 2A (3225)
PS304	⚠ 1-533-282-21	s	CIRCUIT PROTECTOR 2A (3225)
Q100	8-729-029-14	s	TRANSISTOR DTC144EUA-T106
Q500	8-729-117-32	s	TRANSISTOR 2SC4177
Q501	8-729-117-32	s	TRANSISTOR 2SC4177
Q502	8-729-117-32	s	TRANSISTOR 2SC4177
Q503	8-729-140-63	s	TRANSISTOR 2SA1611-M5M6
Q504	8-729-140-63	s	TRANSISTOR 2SA1611-M5M6
Q550	8-729-143-07	s	TRANSISTOR 2SA1610-Y33
Q551	8-729-143-07	s	TRANSISTOR 2SA1610-Y33
Q552	8-729-117-32	s	TRANSISTOR 2SC4177
Q600	8-729-117-32	s	TRANSISTOR 2SC4177
Q601	8-729-140-63	s	TRANSISTOR 2SA1611-M5M6
Q602	8-729-117-32	s	TRANSISTOR 2SC4177
Q603	8-729-209-07	s	TRANSISTOR 2SC4213-B
Q700	8-729-209-07	s	TRANSISTOR 2SC4213-B
R100	1-218-716-11	s	RESISTOR,CHIP 10K 1/16W(1608)
R101	1-218-716-11	s	RESISTOR,CHIP 10K 1/16W(1608)
R102	1-218-708-11	s	RESISTOR,CHIP 4.7K 1/16W(1608)
R103	1-218-708-11	s	RESISTOR,CHIP 4.7K 1/16W(1608)
R104	1-218-716-11	s	RESISTOR,CHIP 10K 1/16W(1608)
R105	1-218-716-11	s	RESISTOR,CHIP 10K 1/16W(1608)
R106	1-218-716-11	s	RESISTOR,CHIP 10K 1/16W(1608)
R107	1-218-716-11	s	RESISTOR,CHIP 10K 1/16W(1608)
R108	1-218-716-11	s	RESISTOR,CHIP 10K 1/16W(1608)
R109	1-218-716-11	s	RESISTOR,CHIP 10K 1/16W(1608)
R110	1-218-716-11	s	RESISTOR,CHIP 10K 1/16W(1608)
R111	1-218-692-11	s	RESISTOR,CHIP 1.0K 1/16W(1608)
R112	1-218-716-11	s	RESISTOR,CHIP 10K 1/16W(1608)
R113	1-218-724-11	s	RESISTOR,CHIP 22K 1/16W(1608)
R114	1-218-724-11	s	RESISTOR,CHIP 22K 1/16W(1608)
R115	1-218-700-11	s	RESISTOR,CHIP 2.2K 1/16W(1608)
R116	1-218-700-11	s	RESISTOR,CHIP 2.2K 1/16W(1608)
R150	1-218-692-11	s	RESISTOR,CHIP 1.0K 1/16W(1608)
R200	1-218-716-11	s	RESISTOR,CHIP 10K 1/16W(1608)
R201	1-218-716-11	s	RESISTOR,CHIP 10K 1/16W(1608)
R202	1-218-708-11	s	RESISTOR,CHIP 4.7K 1/16W(1608)
R203	1-218-708-11	s	RESISTOR,CHIP 4.7K 1/16W(1608)
R204	1-218-716-11	s	RESISTOR,CHIP 10K 1/16W(1608)
R205	1-218-716-11	s	RESISTOR,CHIP 10K 1/16W(1608)
R206	1-218-716-11	s	RESISTOR,CHIP 10K 1/16W(1608)

(AU-272 BOARD [SUFFIX 12])

Ref. No. or Q'ty	Part No.	SP	Description
R207	1-218-716-11	s	RESISTOR,CHIP 10K 1/16W(1608)
R208	1-218-716-11	s	RESISTOR,CHIP 10K 1/16W(1608)
R209	1-218-716-11	s	RESISTOR,CHIP 10K 1/16W(1608)
R210	1-218-716-11	s	RESISTOR,CHIP 10K 1/16W(1608)
R211	1-218-692-11	s	RESISTOR,CHIP 1.0K 1/16W(1608)
R212	1-218-716-11	s	RESISTOR,CHIP 10K 1/16W(1608)
R213	1-218-724-11	s	RESISTOR,CHIP 22K 1/16W(1608)
R214	1-218-724-11	s	RESISTOR,CHIP 22K 1/16W(1608)
R215	1-218-700-11	s	RESISTOR,CHIP 2.2K 1/16W(1608)
R216	1-218-700-11	s	RESISTOR,CHIP 2.2K 1/16W(1608)
R250	1-218-692-11	s	RESISTOR,CHIP 1.0K 1/16W(1608)
R300	1-218-676-11	s	RESISTOR,CHIP 220 1/16W(1608)
R301	1-218-678-11	s	RESISTOR CHIP 270 1/16W (1608)
R302	1-218-692-11	s	RESISTOR,CHIP 1.0K 1/16W(1608)
R303	1-218-692-11	s	RESISTOR,CHIP 1.0K 1/16W(1608)
R500	1-218-700-11	s	RESISTOR,CHIP 2.2K 1/16W(1608)
R501	1-218-700-11	s	RESISTOR,CHIP 2.2K 1/16W(1608)
R502	1-218-682-11	s	RESISTOR,CHIP 390 1/16W (1608)
R503	1-218-682-11	s	RESISTOR,CHIP 390 1/16W (1608)
R504	1-218-682-11	s	RESISTOR,CHIP 390 1/16W (1608)
R505	1-216-864-11	s	RESISTOR,CHIP 0 1/16W (1608)
R507	1-218-712-11	s	RESISTOR,METAL 6.8K 1/16W
R508	1-218-724-11	s	RESISTOR,CHIP 22K 1/16W(1608)
R509	1-218-716-11	s	RESISTOR,CHIP 10K 1/16W(1608)
R510	1-218-668-11	s	RESISTOR,CHIP 100 1/16W (1608)
R511	1-218-704-11	s	RESISTOR,CHIP 3.3K 1/16W(1608)
R512	1-218-704-11	s	RESISTOR,CHIP 3.3K 1/16W(1608)
R513	1-218-704-11	s	RESISTOR,CHIP 3.3K 1/16W(1608)
R514	1-218-700-11	s	RESISTOR,CHIP 2.2K 1/16W(1608)
R515	1-218-668-11	s	RESISTOR,CHIP 100 1/16W (1608)
R516	1-218-668-11	s	RESISTOR,CHIP 100 1/16W (1608)
R517	1-218-700-11	s	RESISTOR,CHIP 2.2K 1/16W(1608)
R518	1-218-700-11	s	RESISTOR,CHIP 2.2K 1/16W(1608)
R519	1-218-682-11	s	RESISTOR,CHIP 390 1/16W (1608)
R520	1-218-682-11	s	RESISTOR,CHIP 390 1/16W (1608)
R521	1-218-682-11	s	RESISTOR,CHIP 390 1/16W (1608)
R522	1-218-682-11	s	RESISTOR,CHIP 390 1/16W (1608)
R523	1-218-700-11	s	RESISTOR,CHIP 2.2K 1/16W(1608)
R524	1-218-700-11	s	RESISTOR,CHIP 2.2K 1/16W(1608)
R530	1-218-670-11	s	RESISTOR,CHIP 120 1/16W (1608)
R531	1-218-670-11	s	RESISTOR,CHIP 120 1/16W (1608)
R532	1-218-670-11	s	RESISTOR,CHIP 120 1/16W (1608)
R533	1-218-668-11	s	RESISTOR,CHIP 100 1/16W (1608)
R534	1-218-668-11	s	RESISTOR,CHIP 100 1/16W (1608)
R535	1-218-668-11	s	RESISTOR,CHIP 100 1/16W (1608)
R536	1-218-670-11	s	RESISTOR,CHIP 120 1/16W (1608)
R537	1-218-670-11	s	RESISTOR,CHIP 120 1/16W (1608)
R538	1-218-670-11	s	RESISTOR,CHIP 120 1/16W (1608)
R539	1-218-670-11	s	RESISTOR,CHIP 120 1/16W (1608)
R550	1-218-732-11	s	RESISTOR,CHIP 47K 1/16W(1608)
R551	1-218-668-11	s	RESISTOR,CHIP 100 1/16W (1608)
R552	1-218-732-11	s	RESISTOR,CHIP 47K 1/16W(1608)
R553	1-218-692-11	s	RESISTOR,CHIP 1.0K 1/16W(1608)
R554	1-218-732-11	s	RESISTOR,CHIP 47K 1/16W(1608)
R555	1-218-668-11	s	RESISTOR,CHIP 100 1/16W (1608)
R556	1-218-732-11	s	RESISTOR,CHIP 47K 1/16W(1608)
R557	1-218-668-11	s	RESISTOR,CHIP 100 1/16W (1608)
R558	1-218-732-11	s	RESISTOR,CHIP 47K 1/16W(1608)
R559	1-218-668-11	s	RESISTOR,CHIP 100 1/16W (1608)

(AU-272 BOARD [SUFFIX 12])

Ref. No. or Q'ty	Part No.	SP	Description
R560	1-218-732-11	s	RESISTOR,CHIP 47K 1/16W(1608)
R561	1-218-732-11	s	RESISTOR,CHIP 47K 1/16W(1608)
R562	1-218-668-11	s	RESISTOR,CHIP 100 1/16W (1608)
R563	1-218-668-11	s	RESISTOR,CHIP 100 1/16W (1608)
R564	1-218-732-11	s	RESISTOR,CHIP 47K 1/16W(1608)
R565	1-218-668-11	s	RESISTOR,CHIP 100 1/16W (1608)
R566	1-218-668-11	s	RESISTOR,CHIP 100 1/16W (1608)
R567	1-218-684-11	s	RESISTOR,CHIP 470 1/16W (1608)
R568	1-218-710-11	s	RESISTOR,CHIP 5.6K 1/16W(1608)
R569	1-218-684-11	s	RESISTOR,CHIP 470 1/16W (1608)
R570	1-218-712-11	s	RESISTOR,METAL 6.8K 1/16W
R571	1-218-708-11	s	RESISTOR,CHIP 4.7K 1/16W(1608)
R572	1-218-692-11	s	RESISTOR,CHIP 1.0K 1/16W(1608)
R573	1-218-704-11	s	RESISTOR,CHIP 3.3K 1/16W(1608)
R574	1-218-700-11	s	RESISTOR,CHIP 2.2K 1/16W(1608)
R575	1-218-724-11	s	RESISTOR,CHIP 22K 1/16W(1608)
R576	1-218-708-11	s	RESISTOR,CHIP 4.7K 1/16W(1608)
R577	1-218-740-11	s	RESISTOR,CHIP 100K 1/16W(1608)
R578	1-218-716-11	s	RESISTOR,CHIP 10K 1/16W(1608)
R579	1-218-706-11	s	RESISTOR,CHIP 3.9K 1/16W(1608)
R580	1-218-692-11	s	RESISTOR,CHIP 1.0K 1/16W(1608)
R581	1-218-716-11	s	RESISTOR,CHIP 10K 1/16W(1608)
R582	1-218-676-11	s	RESISTOR,CHIP 220 1/16W(1608)
R583	1-218-740-11	s	RESISTOR,CHIP 100K 1/16W(1608)
R600	1-218-668-11	s	RESISTOR,CHIP 100 1/16W (1608)
R601	1-218-732-11	s	RESISTOR,CHIP 47K 1/16W(1608)
R602	1-218-716-11	s	RESISTOR,CHIP 10K 1/16W(1608)
R603	1-218-700-11	s	RESISTOR,CHIP 2.2K 1/16W(1608)
R604	1-218-716-11	s	RESISTOR,CHIP 10K 1/16W(1608)
R605	1-218-698-11	s	RESISTOR,CHIP 1.8K 1/16W(1608)
R606	1-218-700-11	s	RESISTOR,CHIP 2.2K 1/16W(1608)
R607	1-218-692-11	s	RESISTOR,CHIP 1.0K 1/16W(1608)
R608	1-218-698-11	s	RESISTOR,CHIP 1.8K 1/16W(1608)
R609	1-218-698-11	s	RESISTOR,CHIP 1.8K 1/16W(1608)
R610	1-218-702-11	s	RESISTOR CHIP 2.7K 1/16W(1608)
R611	1-218-702-11	s	RESISTOR CHIP 2.7K 1/16W(1608)
R612	1-218-690-11	s	RESISTOR,CHIP 820 1/16W (1608)
R613	1-218-682-11	s	RESISTOR,CHIP 390 1/16W (1608)
R614	1-218-668-11	s	RESISTOR,CHIP 100 1/16W (1608)
R615	1-218-740-11	s	RESISTOR,CHIP 100K 1/16W(1608)
R616	1-218-716-11	s	RESISTOR,CHIP 10K 1/16W(1608)
R617	1-218-684-11	s	RESISTOR,CHIP 470 1/16W (1608)
R618	1-218-700-11	s	RESISTOR,CHIP 2.2K 1/16W(1608)
R619	1-218-718-11	s	RESISTOR CHIP 12K 1/16W (1608)
R620	1-218-732-11	s	RESISTOR,CHIP 47K 1/16W(1608)
R621	1-218-700-11	s	RESISTOR,CHIP 2.2K 1/16W(1608)
R622	1-218-748-11	s	RESISTOR,CHIP 220K 1/16W(1608)
R623	1-218-690-11	s	RESISTOR,CHIP 820 1/16W (1608)
R624	1-218-682-11	s	RESISTOR,CHIP 390 1/16W (1608)
R625	1-218-668-11	s	RESISTOR,CHIP 100 1/16W (1608)
R626	1-218-740-11	s	RESISTOR,CHIP 100K 1/16W(1608)
R627	1-218-716-11	s	RESISTOR,CHIP 10K 1/16W(1608)
R628	1-218-684-11	s	RESISTOR,CHIP 470 1/16W (1608)
R629	1-218-700-11	s	RESISTOR,CHIP 2.2K 1/16W(1608)
R630	1-218-718-11	s	RESISTOR CHIP 12K 1/16W (1608)
R631	1-218-732-11	s	RESISTOR,CHIP 47K 1/16W(1608)
R632	1-218-700-11	s	RESISTOR,CHIP 2.2K 1/16W(1608)
R633	1-218-748-11	s	RESISTOR,CHIP 220K 1/16W(1608)
R634	1-218-696-11	s	RESISTOR,CHIP 1.5K 1/16W(1608)

(AU-272 BOARD [SUFFIX 12])

Ref. No. or Q'ty	Part No.	SP	Description
R635	1-218-696-11	s	RESISTOR,CHIP 1.5K 1/16W(1608)
R636	1-218-724-11	s	RESISTOR,CHIP 22K 1/16W(1608)
R637	1-218-724-11	s	RESISTOR,CHIP 22K 1/16W(1608)
R638	1-218-720-11	s	RESISTOR,CHIP 15K 1/16W(1608)
R639	1-218-716-11	s	RESISTOR,CHIP 10K 1/16W(1608)
R640	1-218-710-11	s	RESISTOR,CHIP 5.6K 1/16W(1608)
R641	1-218-716-11	s	RESISTOR,CHIP 10K 1/16W(1608)
R642	1-218-660-91	s	RESISTOR,CHIP 47 1/16W (1608)
R643	1-218-716-11	s	RESISTOR,CHIP 10K 1/16W(1608)
R644	1-218-702-11	s	RESISTOR CHIP 2.7K 1/16W(1608)
R645	1-218-688-11	s	RESISTOR,CHIP 680 1/16W(1608)
R646	1-218-700-11	s	RESISTOR,CHIP 2.2K 1/16W(1608)
R647	1-218-706-11	s	RESISTOR,CHIP 3.9K 1/16W(1608)
R648	1-218-718-11	s	RESISTOR CHIP 12K 1/16W (1608)
R649	1-218-708-11	s	RESISTOR,CHIP 4.7K 1/16W(1608)
R650	1-218-740-11	s	RESISTOR,CHIP 100K 1/16W(1608)
R651	1-218-704-11	s	RESISTOR,CHIP 3.3K 1/16W(1608)
R652	1-218-704-11	s	RESISTOR,CHIP 3.3K 1/16W(1608)
R654	1-218-702-11	s	RESISTOR CHIP 2.7K 1/16W(1608)
R655	1-218-740-11	s	RESISTOR,CHIP 100K 1/16W(1608)
R656	1-218-724-11	s	RESISTOR,CHIP 22K 1/16W(1608)
R657	1-218-708-11	s	RESISTOR,CHIP 4.7K 1/16W(1608)
R658	1-218-708-11	s	RESISTOR,CHIP 4.7K 1/16W(1608)
R659	1-218-708-11	s	RESISTOR,CHIP 4.7K 1/16W(1608)
R660	1-218-716-11	s	RESISTOR,CHIP 10K 1/16W(1608)
R670	1-218-716-11	s	RESISTOR,CHIP 10K 1/16W(1608)
R671	1-218-692-11	s	RESISTOR,CHIP 1.0K 1/16W(1608)
R672	1-218-672-11	s	RESISTOR,CHIP 150 1/16W(1608)
R673	1-218-716-11	s	RESISTOR,CHIP 10K 1/16W(1608)
R674	1-218-692-11	s	RESISTOR,CHIP 1.0K 1/16W(1608)
R675	1-218-672-11	s	RESISTOR,CHIP 150 1/16W(1608)
R676	1-218-718-11	s	RESISTOR CHIP 12K 1/16W (1608)
R677	1-218-724-11	s	RESISTOR,CHIP 22K 1/16W(1608)
R678	1-218-718-11	s	RESISTOR CHIP 12K 1/16W (1608)
R679	1-218-724-11	s	RESISTOR,CHIP 22K 1/16W(1608)
R682	1-218-716-11	s	RESISTOR,CHIP 10K 1/16W(1608)
R700	1-218-716-11	s	RESISTOR,CHIP 10K 1/16W(1608)
R701	1-218-716-11	s	RESISTOR,CHIP 10K 1/16W(1608)
R702	1-218-716-11	s	RESISTOR,CHIP 10K 1/16W(1608)
R703	1-218-686-11	s	RESISTOR CHIP 560 1/16W (1608)
R704	1-218-726-11	s	RESISTOR CHIP 27K 1/16W (1608)
R705	1-218-716-11	s	RESISTOR,CHIP 10K 1/16W(1608)
R706	1-218-724-11	s	RESISTOR,CHIP 22K 1/16W(1608)
R707	1-218-728-11	s	RESISTOR,CHIP 33K 1/16W
R708	1-218-708-11	s	RESISTOR,CHIP 4.7K 1/16W(1608)
R709	1-218-680-11	s	RESISTOR,CHIP 330 1/16W(1608)
R710	1-218-726-11	s	RESISTOR CHIP 27K 1/16W (1608)
R711	1-218-730-11	s	RESISTOR METAL FILM CHIP 39K
R712	1-218-728-11	s	RESISTOR,CHIP 33K 1/16W
R713	1-218-716-11	s	RESISTOR,CHIP 10K 1/16W(1608)
R714	1-218-750-11	s	RESISTOR,CHIP 270K 1/16W(1608)
R715	1-218-700-11	s	RESISTOR,CHIP 2.2K 1/16W(1608)
R716	1-218-740-11	s	RESISTOR,CHIP 100K 1/16W(1608)
R717	1-218-698-11	s	RESISTOR,CHIP 1.8K 1/16W(1608)
R718	1-218-698-11	s	RESISTOR,CHIP 1.8K 1/16W(1608)
R719	1-218-702-11	s	RESISTOR CHIP 2.7K 1/16W(1608)
R720	1-218-702-11	s	RESISTOR CHIP 2.7K 1/16W(1608)
R721	1-218-690-11	s	RESISTOR,CHIP 820 1/16W (1608)
R722	1-218-682-11	s	RESISTOR,CHIP 390 1/16W (1608)

(AU-272 BOARD [SUFFIX 12])

Ref. No. or Q'ty	Part No.	SP	Description
R723	1-218-668-11	s	RESISTOR,CHIP 100 1/16W (1608)
R724	1-218-740-11	s	RESISTOR,CHIP 100K 1/16W(1608)
R725	1-218-712-11	s	RESISTOR,METAL 6.8K 1/16W
R726	1-218-668-11	s	RESISTOR,CHIP 100 1/16W (1608)
R727	1-218-700-11	s	RESISTOR,CHIP 2.2K 1/16W(1608)
R728	1-218-718-11	s	RESISTOR CHIP 12K 1/16W (1608)
R729	1-218-732-11	s	RESISTOR,CHIP 47K 1/16W(1608)
R730	1-218-700-11	s	RESISTOR,CHIP 2.2K 1/16W(1608)
R731	1-218-748-11	s	RESISTOR,CHIP 220K 1/16W(1608)
R732	1-218-690-11	s	RESISTOR,CHIP 820 1/16W (1608)
R733	1-218-682-11	s	RESISTOR,CHIP 390 1/16W (1608)
R734	1-218-668-11	s	RESISTOR,CHIP 100 1/16W (1608)
R735	1-218-740-11	s	RESISTOR,CHIP 100K 1/16W(1608)
R736	1-218-712-11	s	RESISTOR,METAL 6.8K 1/16W
R737	1-218-668-11	s	RESISTOR,CHIP 100 1/16W (1608)
R738	1-218-700-11	s	RESISTOR,CHIP 2.2K 1/16W(1608)
R739	1-218-718-11	s	RESISTOR CHIP 12K 1/16W (1608)
R740	1-218-732-11	s	RESISTOR,CHIP 47K 1/16W(1608)
R741	1-218-700-11	s	RESISTOR,CHIP 2.2K 1/16W(1608)
R742	1-218-748-11	s	RESISTOR,CHIP 220K 1/16W(1608)
R743	1-218-696-11	s	RESISTOR,CHIP 1.5K 1/16W(1608)
R744	1-218-696-11	s	RESISTOR,CHIP 1.5K 1/16W(1608)
R745	1-218-724-11	s	RESISTOR,CHIP 22K 1/16W(1608)
R746	1-218-724-11	s	RESISTOR,CHIP 22K 1/16W(1608)
R747	1-218-720-11	s	RESISTOR,CHIP 15K 1/16W(1608)
R748	1-218-716-11	s	RESISTOR,CHIP 10K 1/16W(1608)
R749	1-218-716-11	s	RESISTOR,CHIP 10K 1/16W(1608)
R750	1-218-660-91	s	RESISTOR,CHIP 47 1/16W (1608)
R751	1-218-716-11	s	RESISTOR,CHIP 10K 1/16W(1608)
R752	1-218-702-11	s	RESISTOR CHIP 2.7K 1/16W(1608)
R753	1-218-700-11	s	RESISTOR,CHIP 2.2K 1/16W(1608)
R754	1-218-688-11	s	RESISTOR,CHIP 680 1/16W(1608)
R755	1-218-706-11	s	RESISTOR,CHIP 3.9K 1/16W(1608)
R756	1-218-718-11	s	RESISTOR CHIP 12K 1/16W (1608)
R757	1-218-704-11	s	RESISTOR,CHIP 3.3K 1/16W(1608)
R758	1-218-704-11	s	RESISTOR,CHIP 3.3K 1/16W(1608)
R759	1-218-702-11	s	RESISTOR CHIP 2.7K 1/16W(1608)
R760	1-218-708-11	s	RESISTOR,CHIP 4.7K 1/16W(1608)
R761	1-218-724-11	s	RESISTOR,CHIP 22K 1/16W(1608)
R762	1-218-708-11	s	RESISTOR,CHIP 4.7K 1/16W(1608)
R763	1-218-708-11	s	RESISTOR,CHIP 4.7K 1/16W(1608)
R764	1-218-708-11	s	RESISOTR,CHIP 4.7K 1/16W(1608)
R765	1-218-716-11	s	RESISTOR,CHIP 10K 1/16W(1608)
R770	1-218-692-11	s	RESISTOR,CHIP 1.0K 1/16W(1608)
R771	1-218-668-11	s	RESISTOR,CHIP 100 1/16W (1608)
R772	1-218-668-11	s	RESISTOR,CHIP 100 1/16W (1608)
R773	1-218-718-11	s	RESISTOR CHIP 12K 1/16W (1608)
R774	1-218-724-11	s	RESISTOR,CHIP 22K 1/16W(1608)
R775	1-218-718-11	s	RESISTOR CHIP 12K 1/16W (1608)
R776	1-218-724-11	s	RESISTOR,CHIP 22K 1/16W(1608)
R779	1-218-716-11	s	RESISTOR,CHIP 10K 1/16W(1608)
RV100	1-241-263-11	s	RESISTOR ADJ 5K (CERMET)
RV101	1-241-263-11	s	RESISTOR ADJ 5K (CERMET)
RV200	1-241-263-11	s	RESISTOR ADJ 5K (CERMET)
RV201	1-241-263-11	s	RESISTOR ADJ 5K (CERMET)
RV500	1-237-036-11	s	RESISTOR, ADJ,CERMET 10K
RV600	1-241-265-11	s	RESISTOR ADJ 20K (CERMET)
RV601	1-241-264-11	s	RESISTOR ADJ 10K (CERMET)

(AU-272 BOARD [SUFFIX 12])

Ref. No. or Q'ty	Part No.	SP	Description
RV700	1-241-265-11	s	RESISTOR ADJ 20K (CERMET)
RV701	1-241-264-11	s	RESISTOR ADJ 10K (CERMET)
S101	1-692-270-41	s	SWITCH, SLIDE
S201	1-692-270-41	s	SWITCH, SLIDE
S600	1-692-270-41	s	SWITCH, SLIDE
S700	1-692-270-41	s	SWITCH, SLIDE

AU-272 BOARD [SUFFIX 13-]

[Lot No. 375 -] HDW-M2000/P, M2100/P, A2100
[Lot No. 434 -] DVW-M2000/P
[Lot No. 375 -] MSW-M2000/P, A2000/P, M2100/P
[Lot No. 495 -] MSW-M2000E/P, M2100E/P

Ref. No. or Q'ty	Part No.	SP	Description
1pc	A-8324-886-B	s	MOUNTED CIRCUIT BOARD, AU-272
1pc	3-179-085-11	s	LEVER(L),PRINTED C.BOARD
C100	1-164-315-11	s	CAPACITOR,CERAMIC 470PF/50V CH
C101	1-109-864-11	s	CAPACITOR CHIP CERAMIC 68PF
C102	1-162-959-11	s	CAPACITOR,CERAMIC 330PF/50V SL
C103	1-164-315-11	s	CAPACITOR,CERAMIC 470PF/50V CH
C104	1-164-816-11	s	CAPACITOR,CERAMIC 220PF/50V CH
C105	1-135-822-11	s	CAPACITOR,CHIP FILM 0.0022MF
C106	1-164-315-11	s	CAPACITOR,CERAMIC 470PF/50V CH
C107	1-115-154-11	s	CAPACITOR ELECT 10MF/16V(BP)
C108	1-127-955-11	s	CAPACITOR,FILM 0.068MF (3225)
C109	1-162-919-11	s	CAPACITOR,CERAMIC 22PF/50V CH
C110	1-162-919-11	s	CAPACITOR,CERAMIC 22PF/50V CH
C111	1-115-154-11	s	CAPACITOR ELECT 10MF/16V(BP)
C112	1-115-154-11	s	CAPACITOR ELECT 10MF/16V(BP)
C113	1-107-826-11	s	CAPACITOR,CHIP CERAMIC 0.1MF
C114	1-107-826-11	s	CAPACITOR,CHIP CERAMIC 0.1MF
C115	1-164-816-11	s	CAPACITOR,CERAMIC 220PF/50V CH
C120	1-126-394-11	s	CAPACITOR,ELECT 10MF/16V(CHIP)
C121	1-126-394-11	s	CAPACITOR,ELECT 10MF/16V(CHIP)
C200	1-164-315-11	s	CAPACITOR,CERAMIC 470PF/50V CH
C201	1-109-864-11	s	CAPACITOR CHIP CERAMIC 68PF
C202	1-162-959-11	s	CAPACITOR,CERAMIC 330PF/50V SL
C203	1-164-315-11	s	CAPACITOR,CERAMIC 470PF/50V CH
C204	1-164-816-11	s	CAPACITOR,CERAMIC 220PF/50V CH
C205	1-135-822-11	s	CAPACITOR,CHIP FILM 0.0022MF
C206	1-164-315-11	s	CAPACITOR,CERAMIC 470PF/50V CH
C207	1-115-154-11	s	CAPACITOR ELECT 10MF/16V(BP)
C208	1-127-955-11	s	CAPACITOR,FILM 0.068MF (3225)
C209	1-128-451-11	s	CAPACITOR ELECT 22MF/16V(105C)
C210	1-128-451-11	s	CAPACITOR ELECT 22MF/16V(105C)
C211	1-162-919-11	s	CAPACITOR,CERAMIC 22PF/50V CH
C212	1-162-919-11	s	CAPACITOR,CERAMIC 22PF/50V CH
C213	1-115-154-11	s	CAPACITOR ELECT 10MF/16V(BP)
C214	1-115-154-11	s	CAPACITOR ELECT 10MF/16V(BP)
C215	1-164-816-11	s	CAPACITOR,CERAMIC 220PF/50V CH
C300	1-126-394-11	s	CAPACITOR,ELECT 10MF/16V(CHIP)
C301	1-126-394-11	s	CAPACITOR,ELECT 10MF/16V(CHIP)
C302	1-107-418-11	s	CAPACITOR,CHIP ELECT 10MF 35V
C303	1-107-418-11	s	CAPACITOR,CHIP ELECT 10MF 35V
C304	1-128-451-11	s	CAPACITOR ELECT 22MF/16V(105C)
C305	1-128-451-11	s	CAPACITOR ELECT 22MF/16V(105C)
C306	1-126-394-11	s	CAPACITOR,ELECT 10MF/16V(CHIP)
C307	1-126-394-11	s	CAPACITOR,ELECT 10MF/16V(CHIP)
C308	1-107-418-11	s	CAPACITOR,CHIP ELECT 10MF 35V
C309	1-107-418-11	s	CAPACITOR,CHIP ELECT 10MF 35V
C311	1-126-394-11	s	CAPACITOR,ELECT 10MF/16V(CHIP)
C312	1-162-970-11	s	CAPACITOR CERAMIC 0.01MF/25V B
C314	1-107-826-11	s	CAPACITOR,CHIP CERAMIC 0.1MF
C315	1-107-826-11	s	CAPACITOR,CHIP CERAMIC 0.1MF
C316	1-107-826-11	s	CAPACITOR,CHIP CERAMIC 0.1MF
C317	1-107-826-11	s	CAPACITOR,CHIP CERAMIC 0.1MF
C318	1-107-826-11	s	CAPACITOR,CHIP CERAMIC 0.1MF
C319	1-107-826-11	s	CAPACITOR,CHIP CERAMIC 0.1MF
C320	1-162-970-11	s	CAPACITOR CERAMIC 0.01MF/25V B

(AU-272 BOARD [SUFFIX 13-])

Ref. No. or Q'ty	Part No.	SP	Description
C321	1-107-826-11	s	CAPACITOR,CHIP CERAMIC 0.1MF
C322	1-126-394-11	s	CAPACITOR,ELECT 10MF/16V(CHIP)
C500	1-107-826-11	s	CAPACITOR,CHIP CERAMIC 0.1MF
C501	1-107-826-11	s	CAPACITOR,CHIP CERAMIC 0.1MF
C502	1-107-826-11	s	CAPACITOR,CHIP CERAMIC 0.1MF
C503	1-107-826-11	s	CAPACITOR,CHIP CERAMIC 0.1MF
C504	1-165-176-11	s	CAPACITOR,CERAMIC 47000PF/16V
C505	1-128-451-11	s	CAPACITOR ELECT 22MF/16V(105C)
C506	1-107-826-11	s	CAPACITOR,CHIP CERAMIC 0.1MF
C507	1-162-925-11	s	CAPACITOR,CERAMIC 68PF/50V CH
C508	1-162-927-11	s	CAPACITOR,CERAMIC 100PF/50V CH
C509	1-162-959-11	s	CAPACITOR,CERAMIC 330PF/50V SL
C510	1-162-925-11	s	CAPACITOR,CERAMIC 68PF/50V CH
C511	1-107-826-11	s	CAPACITOR,CHIP CERAMIC 0.1MF
C512	1-165-872-21	s	CAPACITOR,SOLID ELECT 47MF
C513	1-107-826-11	s	CAPACITOR,CHIP CERAMIC 0.1MF
C514	1-107-826-11	s	CAPACITOR,CHIP CERAMIC 0.1MF
C515	1-107-826-11	s	CAPACITOR,CHIP CERAMIC 0.1MF
C516	1-107-826-11	s	CAPACITOR,CHIP CERAMIC 0.1MF
C517	1-107-418-11	s	CAPACITOR,CHIP ELECT 10MF 35V
C518	1-107-418-11	s	CAPACITOR,CHIP ELECT 10MF 35V
C519	1-107-826-11	s	CAPACITOR,CHIP CERAMIC 0.1MF
C520	1-107-826-11	s	CAPACITOR,CHIP CERAMIC 0.1MF
C521	1-107-826-11	s	CAPACITOR,CHIP CERAMIC 0.1MF
C522	1-107-826-11	s	CAPACITOR,CHIP CERAMIC 0.1MF
C523	1-107-826-11	s	CAPACITOR,CHIP CERAMIC 0.1MF
C524	1-107-826-11	s	CAPACITOR,CHIP CERAMIC 0.1MF
C525	1-128-451-11	s	CAPACITOR ELECT 22MF/16V(105C)
C526	1-128-451-11	s	CAPACITOR ELECT 22MF/16V(105C)
C527	1-107-826-11	s	CAPACITOR,CHIP CERAMIC 0.1MF
C528	1-107-826-11	s	CAPACITOR,CHIP CERAMIC 0.1MF
C550	1-107-826-11	s	CAPACITOR,CHIP CERAMIC 0.1MF
C551	1-115-412-11	s	CAPACITOR,CERAMIC 680PF/25V CH
C552	1-162-927-11	s	CAPACITOR,CERAMIC 100PF/50V CH
C553	1-107-826-11	s	CAPACITOR,CHIP CERAMIC 0.1MF
C554	1-107-826-11	s	CAPACITOR,CHIP CERAMIC 0.1MF
C555	1-162-923-11	s	CAPACITOR,CERAMIC 47PF/50V CH
C556	1-162-959-11	s	CAPACITOR,CERAMIC 330PF/50V SL
C557	1-126-394-11	s	CAPACITOR,ELECT 10MF/16V(CHIP)
C558	1-107-826-11	s	CAPACITOR,CHIP CERAMIC 0.1MF
C559	1-115-340-11	s	CAPACITOR CERAMIC 0.22MF/25V B
C560	1-107-826-11	s	CAPACITOR,CHIP CERAMIC 0.1MF
C561	1-107-826-11	s	CAPACITOR,CHIP CERAMIC 0.1MF
C563	1-128-451-11	s	CAPACITOR ELECT 22MF/16V(105C)
C564	1-107-826-11	s	CAPACITOR,CHIP CERAMIC 0.1MF
C567	1-107-826-11	s	CAPACITOR,CHIP CERAMIC 0.1MF
C568	1-107-826-11	s	CAPACITOR,CHIP CERAMIC 0.1MF
C569	1-107-826-11	s	CAPACITOR,CHIP CERAMIC 0.1MF
C570	1-107-826-11	s	CAPACITOR,CHIP CERAMIC 0.1MF
C571	1-165-176-11	s	CAPACITOR,CERAMIC 47000PF/16V
C573	1-162-970-11	s	CAPACITOR CERAMIC 0.01MF/25V B
C574	1-107-826-11	s	CAPACITOR,CHIP CERAMIC 0.1MF
C600	1-165-176-11	s	CAPACITOR,CERAMIC 47000PF/16V
C601	1-165-176-11	s	CAPACITOR,CERAMIC 47000PF/16V
C602	1-165-176-11	s	CAPACITOR,CERAMIC 47000PF/16V
C603	1-165-176-11	s	CAPACITOR,CERAMIC 47000PF/16V
C604	1-115-412-11	s	CAPACITOR,CERAMIC 680PF/25V CH
C605	1-125-898-91	s	C-CAP, 0.22-50 Z F
C606	1-127-950-11	s	CAPACITOR,CHIP FILM 0.01MF

(AU-272 BOARD [SUFFIX 13-])

Ref. No. or Q'ty	Part No.	SP	Description
C607	1-107-826-11	s	CAPACITOR,CHIP CERAMIC 0.1MF
C608	1-165-176-11	s	CAPACITOR,CERAMIC 47000PF/16V
C609	1-107-826-11	s	CAPACITOR,CHIP CERAMIC 0.1MF
C610	1-165-176-11	s	CAPACITOR,CERAMIC 47000PF/16V
C611	1-117-136-11	s	CAPACITOR ELECT 10MF/6.3V(BP)
C612	1-115-417-11	s	CAP,CERAMIC 2700PF/50V (2012)
C613	1-135-824-11	s	CAPACITOR,CHIP FILM 0.0039MF
C614	1-164-217-11	s	CAPACITOR,CERAMIC 150PF/50V CH
C615	1-164-690-11	s	CAPACITOR ,CERAMIC 2200PF CH
C616	1-107-826-11	s	CAPACITOR,CHIP CERAMIC 0.1MF
C617	1-164-739-11	s	CAPACITOR CERAMIC 560PF (1608)
C618	1-165-947-91	s	CAP, CHIP CERAMIC 2.2MF (3225)
C619	1-165-176-11	s	CAPACITOR,CERAMIC 47000PF/16V
C620	1-125-827-11	s	CAPACITOR,CERAMIC 1MF/25V
C621	1-127-948-11	s	CAPACITOR,FILM 0.0047MF (2012)
C622	1-127-950-11	s	CAPACITOR,CHIP FILM 0.01MF
C623	1-164-315-11	s	CAPACITOR,CERAMIC 470PF/50V CH
C624	1-100-159-91	s	CAP, CERAMIC 22MF B (SMD) 3216
C625	1-117-136-11	s	CAPACITOR ELECT 10MF/6.3V(BP)
C626	1-115-417-11	s	CAP,CERAMIC 2700PF/50V (2012)
C627	1-135-824-11	s	CAPACITOR,CHIP FILM 0.0039MF
C628	1-164-217-11	s	CAPACITOR,CERAMIC 150PF/50V CH
C629	1-164-690-11	s	CAPACITOR ,CERAMIC 2200PF CH
C630	1-107-826-11	s	CAPACITOR,CHIP CERAMIC 0.1MF
C631	1-164-739-11	s	CAPACITOR CERAMIC 560PF (1608)
C632	1-165-947-91	s	CAP, CHIP CERAMIC 2.2MF (3225)
C633	1-125-827-11	s	CAPACITOR,CERAMIC 1MF/25V
C634	1-165-176-11	s	CAPACITOR,CERAMIC 47000PF/16V
C635	1-127-948-11	s	CAPACITOR,FILM 0.0047MF (2012)
C636	1-127-950-11	s	CAPACITOR,CHIP FILM 0.01MF
C637	1-164-315-11	s	CAPACITOR,CERAMIC 470PF/50V CH
C638	1-100-159-91	s	CAP, CERAMIC 22MF B (SMD) 3216
C639	1-115-152-11	s	CAPACITOR,ELECT 22MF/6.3V(BP)
C640	1-115-152-11	s	CAPACITOR,ELECT 22MF/6.3V(BP)
C641	1-162-919-11	s	CAPACITOR,CERAMIC 22PF/50V CH
C643	1-128-590-11	s	CAPACITOR ELECT 100MF/6.3V(105
C644	1-100-159-91	s	CAP, CERAMIC 22MF B (SMD) 3216
C645	1-126-394-11	s	CAPACITOR,ELECT 10MF/16V(CHIP)
C646	1-164-230-11	s	CAPACITOR,CERAMIC 220PF/50V
C647	1-100-159-91	s	CAP, CERAMIC 22MF B (SMD) 3216
C648	1-127-953-11	s	CAPACITOR,FILM 0.033MF (3216)
C649	1-127-948-11	s	CAPACITOR,FILM 0.0047MF (2012)
C650	1-162-910-11	s	CAPACITOR,CERAMIC 5PF/50V 1608
C651	1-127-738-11	s	CAPACITOR, CERAMIC 4.7MF/25V
C652	1-165-947-91	s	CAP, CHIP CERAMIC 2.2MF (3225)
C653	1-127-948-11	s	CAPACITOR,FILM 0.0047MF (2012)
C655	1-115-412-11	s	CAPACITOR,CERAMIC 680PF/25V CH
C656	1-127-692-11	s	CAP, CHIP CERAMIC 10MF B 3216
C657	1-125-898-91	s	C-CAP, 0.22-50 Z F
C658	1-126-394-11	s	CAPACITOR,ELECT 10MF/16V(CHIP)
C659	1-162-919-11	s	CAPACITOR,CERAMIC 22PF/50V CH
C660	1-162-919-11	s	CAPACITOR,CERAMIC 22PF/50V CH
C661	1-115-154-11	s	CAPACITOR ELECT 10MF/16V(BP)
C662	1-115-154-11	s	CAPACITOR ELECT 10MF/16V(BP)
C663	1-125-827-11	s	CAPACITOR,CERAMIC 1MF/25V
C664	1-125-827-11	s	CAPACITOR,CERAMIC 1MF/25V
C665	1-127-957-11	s	CAPACITOR,FILM 0.0056MF (2012)
C666	1-115-419-11	s	CAPACITOR,CHIP CERAMIC3300PF
C682	1-107-826-11	s	CAPACITOR,CHIP CERAMIC 0.1MF

(AU-272 BOARD [SUFFIX 13-])

Ref. No. or Q'ty	Part No.	SP	Description
C683	1-107-826-11	s	CAPACITOR,CHIP CERAMIC 0.1MF
C700	1-165-176-11	s	CAPACITOR,CERAMIC 47000PF/16V
C701	1-165-176-11	s	CAPACITOR,CERAMIC 47000PF/16V
C702	1-115-412-11	s	CAPACITOR,CERAMIC 680PF/25V CH
C703	1-125-898-91	s	C-CAP, 0.22-50 Z F
C704	1-165-947-91	s	CAP, CHIP CERAMIC 2.2MF (3225)
C705	1-165-176-11	s	CAPACITOR,CERAMIC 47000PF/16V
C706	1-165-176-11	s	CAPACITOR,CERAMIC 47000PF/16V
C707	1-164-230-11	s	CAPACITOR,CERAMIC 220PF/50V
C708	1-117-136-11	s	CAPACITOR ELECT 10MF/6.3V(BP)
C709	1-115-417-11	s	CAP,CERAMIC 2700PF/50V (2012)
C710	1-135-824-11	s	CAPACITOR,CHIP FILM 0.0039MF
C711	1-164-217-11	s	CAPACITOR,CERAMIC 150PF/50V CH
C712	1-164-690-11	s	CAPACITOR ,CERAMIC 2200PF CH
C713	1-107-826-11	s	CAPACITOR,CHIP CERAMIC 0.1MF
C714	1-164-739-11	s	CAPACITOR CERAMIC 560PF (1608)
C715	1-165-947-91	s	CAP, CHIP CERAMIC 2.2MF (3225)
C716	1-165-176-11	s	CAPACITOR,CERAMIC 47000PF/16V
C717	1-125-827-11	s	CAPACITOR,CERAMIC 1MF/25V
C718	1-127-948-11	s	CAPACITOR,FILM 0.0047MF (2012)
C719	1-127-950-11	s	CAPACITOR,CHIP FILM 0.01MF
C720	1-164-315-11	s	CAPACITOR,CERAMIC 470PF/50V CH
C721	1-100-159-91	s	CAP, CERAMIC 22MF B (SMD) 3216
C722	1-117-136-11	s	CAPACITOR ELECT 10MF/6.3V(BP)
C723	1-115-417-11	s	CAP,CERAMIC 2700PF/50V (2012)
C724	1-135-824-11	s	CAPACITOR,CHIP FILM 0.0039MF
C725	1-164-217-11	s	CAPACITOR,CERAMIC 150PF/50V CH
C726	1-164-690-11	s	CAPACITOR ,CERAMIC 2200PF CH
C727	1-107-826-11	s	CAPACITOR,CHIP CERAMIC 0.1MF
C728	1-164-739-11	s	CAPACITOR CERAMIC 560PF (1608)
C729	1-165-947-91	s	CAP, CHIP CERAMIC 2.2MF (3225)
C730	1-125-827-11	s	CAPACITOR,CERAMIC 1MF/25V
C731	1-165-176-11	s	CAPACITOR,CERAMIC 47000PF/16V
C732	1-127-950-11	s	CAPACITOR,CHIP FILM 0.01MF
C733	1-127-948-11	s	CAPACITOR,FILM 0.0047MF (2012)
C734	1-164-315-11	s	CAPACITOR,CERAMIC 470PF/50V CH
C735	1-100-159-91	s	CAP, CERAMIC 22MF B (SMD) 3216
C736	1-115-152-11	s	CAPACITOR,ELECT 22MF/6.3V(BP)
C737	1-115-152-11	s	CAPACITOR,ELECT 22MF/6.3V(BP)
C738	1-162-919-11	s	CAPACITOR,CERAMIC 22PF/50V CH
C740	1-100-159-91	s	CAP, CERAMIC 22MF B (SMD) 3216
C741	1-126-394-11	s	CAPACITOR,ELECT 10MF/16V(CHIP)
C742	1-164-230-11	s	CAPACITOR,CERAMIC 220PF/50V
C743	1-127-953-11	s	CAPACITOR,FILM 0.033MF (3216)
C744	1-100-159-91	s	CAP, CERAMIC 22MF B (SMD) 3216
C745	1-127-948-11	s	CAPACITOR,FILM 0.0047MF (2012)
C746	1-162-910-11	s	CAPACITOR,CERAMIC 5PF/50V 1608
C747	1-127-948-11	s	CAPACITOR,FILM 0.0047MF (2012)
C748	1-127-738-11	s	CAPACITOR, CERAMIC 4.7MF/25V
C749	1-165-947-91	s	CAP, CHIP CERAMIC 2.2MF (3225)
C750	1-115-412-11	s	CAPACITOR,CERAMIC 680PF/25V CH
C751	1-127-692-11	s	CAP, CHIP CERAMIC 10MF B 3216
C752	1-125-898-91	s	C-CAP, 0.22-50 Z F
C753	1-127-692-11	s	CAP, CHIP CERAMIC 10MF B 3216
C754	1-107-826-11	s	CAPACITOR,CHIP CERAMIC 0.1MF
C755	1-126-394-11	s	CAPACITOR,ELECT 10MF/16V(CHIP)
C756	1-162-919-11	s	CAPACITOR,CERAMIC 22PF/50V CH
C757	1-162-919-11	s	CAPACITOR,CERAMIC 22PF/50V CH
C758	1-115-154-11	s	CAPACITOR ELECT 10MF/16V(BP)

(AU-272 BOARD [SUFFIX 13-])

Ref. No. or Q'ty	Part No.	SP	Description
C759	1-115-154-11	s	CAPACITOR ELECT 10MF/16V(BP)
C760	1-125-827-11	s	CAPACITOR,CERAMIC 1MF/25V
C761	1-125-827-11	s	CAPACITOR,CERAMIC 1MF/25V
C765	1-127-957-11	s	CAPACITOR,FILM 0.0056MF (2012)
C766	1-115-419-11	s	CAPACITOR,CHIP CERAMIC3300PF
C780	1-107-826-11	s	CAPACITOR,CHIP CERAMIC 0.1MF
C781	1-107-826-11	s	CAPACITOR,CHIP CERAMIC 0.1MF
C782	1-107-826-11	s	CAPACITOR,CHIP CERAMIC 0.1MF
C783	1-107-826-11	s	CAPACITOR,CHIP CERAMIC 0.1MF
C784	1-127-692-11	s	CAP, CHIP CERAMIC 10MF B 3216
CN3	1-778-262-12	o	CONNECTOR, BOARD TO BOARD 148P
D300	8-719-975-40	s	DIODE RB411D (RECTI)
D301	8-719-975-40	s	DIODE RB411D (RECTI)
D302	8-719-975-40	s	DIODE RB411D (RECTI)
D303	8-719-975-40	s	DIODE RB411D (RECTI)
D304	8-719-975-40	s	DIODE RB411D (RECTI)
D305	8-719-975-40	s	DIODE RB411D (RECTI)
D500	8-719-820-41	s	DIODE 1SS302
D550	8-719-821-39	s	DIODE 1SV160 (VARI-CAP)
D551	8-719-821-39	s	DIODE 1SV160 (VARI-CAP)
D600	8-719-820-41	s	DIODE 1SS302
D601	8-719-820-41	s	DIODE 1SS302
D700	8-719-801-78	s	DIODE 1SS184
D701	8-719-820-41	s	DIODE 1SS302
D702	8-719-820-41	s	DIODE 1SS302
E1	1-535-877-22	s	CHIP,CHECKER (TEST POINT)
E2	1-535-877-22	s	CHIP,CHECKER (TEST POINT)
E3	1-535-877-22	s	CHIP,CHECKER (TEST POINT)
E500	1-535-877-22	s	CHIP,CHECKER (TEST POINT)
E501	1-535-877-22	s	CHIP,CHECKER (TEST POINT)
E600	1-535-877-22	s	CHIP,CHECKER (TEST POINT)
E700	1-535-877-22	s	CHIP,CHECKER (TEST POINT)
FL500	1-234-459-11	s	FILTER, LOW PASS
FL501	1-234-459-11	s	FILTER, LOW PASS
FL502	1-234-459-11	s	FILTER, LOW PASS
FL600	1-236-015-11	s	FILTER,BAND PASS
FL601	1-236-012-11	s	FILTER,LOW PASS
FL602	1-236-013-11	s	FILTER,LOW PASS
FL603	1-236-003-11	s	FILTER,LOW PASS
FL700	1-236-012-11	s	FILTER,LOW PASS
FL701	1-236-013-11	s	FILTER,LOW PASS
IC100	8-759-711-85	s	IC NJM4580E-D
IC101	8-759-711-85	s	IC NJM4580E-D
IC102	8-741-164-50	s	IC SBX1645-01 (HYBRID)
IC103	8-759-700-78	s	IC NJM082M
IC104	8-759-711-85	s	IC NJM4580E-D
IC200	8-759-711-85	s	IC NJM4580E-D
IC201	8-759-711-85	s	IC NJM4580E-D
IC202	8-759-711-85	s	IC NJM4580E-D
IC300	8-759-642-22	s	IC UPC29M05T-E2
IC302	8-759-041-46	s	IC L78M05TLL-SONY-TL
IC303	8-759-662-86	s	IC NJM79M05DL1A(TE2)
IC304	8-759-642-22	s	IC UPC29M05T-E2
IC305	6-701-871-11	s	IC TK72150MCL-G
IC306	6-701-871-11	s	IC TK72150MCL-G
IC500	8-759-573-91	s	IC AD8055ARTZ-REEL7
IC501	8-752-334-55	s	IC CXD1175AM

(AU-272 BOARD [SUFFIX 13-])

Ref. No. or Q'ty	Part No.	SP	Description
IC502	8-759-524-10	s	IC TC74VHC157FT (EL)
IC503	8-752-359-55	s	IC CXK48324R
IC504	8-752-356-37	s	IC CXD102-128Q
IC505	8-752-334-64	s	IC CXD1171M
IC506	8-752-334-64	s	IC CXD1171M
IC550	8-759-491-50	s	IC TC74VHCT244AFT(EL)
IC551	8-759-523-97	s	IC TC74VHC123AFT(EL)
IC552	8-759-530-28	s	IC TC4066BFT
IC553	8-759-142-20	s	IC UPC4062G2
IC554	6-700-915-01	s	IC SN74AHCT04PWR
IC555	8-759-711-85	s	IC NJM4580E-D
IC556	6-706-492-01	s	IC TC7SHU04FU(T5RSOJF)
IC557	6-706-492-01	s	IC TC7SHU04FU(T5RSOJF)
IC600	8-759-093-04	s	IC AN3920S
IC601	6-706-484-01	s	IC TC7SH04FU(T5RSOYJF)
IC602	6-706-483-01	s	IC TC7SH02FU(T5RSOYJF)
IC603	8-759-093-06	s	IC AN3922NS
IC604	8-759-093-06	s	IC AN3922NS
IC605	8-759-523-02	s	IC TC74HC4053AFT(EL)
IC606	8-752-009-90	s	IC CX20099
IC607	8-759-711-85	s	IC NJM4580E-D
IC608	8-759-711-85	s	IC NJM4580E-D
IC700	8-759-093-04	s	IC AN3920S
IC701	8-759-700-78	s	IC NJM082M
IC702	8-759-700-07	s	IC NJM2903M
IC703	8-759-093-06	s	IC AN3922NS
IC704	8-759-093-06	s	IC AN3922NS
IC705	8-759-523-02	s	IC TC74HC4053AFT(EL)
IC706	8-759-711-85	s	IC NJM4580E-D
L500	1-410-389-31	s	INDUCTOR,CHIP 47UH (3225)
L501	1-412-951-11	s	INDUCTOR 10UH (2520)
L502	1-410-389-31	s	INDUCTOR,CHIP 47UH (3225)
L503	1-410-389-31	s	INDUCTOR,CHIP 47UH (3225)
L504	1-410-389-31	s	INDUCTOR,CHIP 47UH (3225)
L505	1-410-389-31	s	INDUCTOR,CHIP 47UH (3225)
L550	1-410-389-31	s	INDUCTOR,CHIP 47UH (3225)
L551	1-412-929-21	s	INDUCTOR 0.15UH (2518)
L552	1-412-955-11	s	INDUCTOR 22UH (2520)
L600	1-414-852-11	s	INDUCTOR (SMD) 470.0UH
L601	1-414-854-41	s	INDUCTOR (SMD) 1000.0UH
L602	1-414-852-11	s	INDUCTOR (SMD) 470.0UH
L603	1-414-854-41	s	INDUCTOR (SMD) 1000.0UH
L604	1-414-854-41	s	INDUCTOR (SMD) 1000.0UH
L605	1-414-854-41	s	INDUCTOR (SMD) 1000.0UH
L700	1-414-852-11	s	INDUCTOR (SMD) 470.0UH
L701	1-414-854-41	s	INDUCTOR (SMD) 1000.0UH
L702	1-414-852-11	s	INDUCTOR (SMD) 470.0UH
L703	1-414-854-41	s	INDUCTOR (SMD) 1000.0UH
L704	1-414-854-41	s	INDUCTOR (SMD) 1000.0UH
L705	1-414-854-41	s	INDUCTOR (SMD) 1000.0UH
PS300	⚠ 1-533-282-21	s	CIRCUIT PROTECTOR 2A (3225)
PS301	⚠ 1-533-282-21	s	CIRCUIT PROTECTOR 2A (3225)
PS302	⚠ 1-533-282-21	s	CIRCUIT PROTECTOR 2A (3225)
PS303	⚠ 1-533-282-21	s	CIRCUIT PROTECTOR 2A (3225)
PS304	⚠ 1-533-282-21	s	CIRCUIT PROTECTOR 2A (3225)
Q100	8-729-928-81	s	TRANSISTOR DTC144EE
Q500	8-729-117-32	s	TRANSISTOR 2SC4177
Q501	8-729-117-32	s	TRANSISTOR 2SC4177

(AU-272 BOARD [SUFFIX 13-])

Ref. No. or Q'ty	Part No.	SP	Description
Q502	8-729-117-32	s	TRANSISTOR 2SC4177
Q503	8-729-140-63	s	TRANSISTOR 2SA1611-M5M6
Q504	8-729-140-63	s	TRANSISTOR 2SA1611-M5M6
Q550	8-729-143-07	s	TRANSISTOR 2SA1610-Y33
Q551	8-729-143-07	s	TRANSISTOR 2SA1610-Y33
Q600	8-729-117-32	s	TRANSISTOR 2SC4177
Q601	8-729-140-63	s	TRANSISTOR 2SA1611-M5M6
Q603	8-729-209-07	s	TRANSISTOR 2SC4213-B
Q700	8-729-209-07	s	TRANSISTOR 2SC4213-B
R100	1-218-871-11	s	RESISTOR,CHIP 10K 1/10W (1608)
R101	1-218-871-11	s	RESISTOR,CHIP 10K 1/10W (1608)
R102	1-218-863-11	s	RESISTOR,CHIP 4.7K 1/10W(1608)
R103	1-218-863-11	s	RESISTOR,CHIP 4.7K 1/10W(1608)
R104	1-218-871-11	s	RESISTOR,CHIP 10K 1/10W (1608)
R105	1-218-871-11	s	RESISTOR,CHIP 10K 1/10W (1608)
R106	1-218-871-11	s	RESISTOR,CHIP 10K 1/10W (1608)
R107	1-218-871-11	s	RESISTOR,CHIP 10K 1/10W (1608)
R108	1-218-871-11	s	RESISTOR,CHIP 10K 1/10W (1608)
R109	1-218-871-11	s	RESISTOR,CHIP 10K 1/10W (1608)
R110	1-218-871-11	s	RESISTOR,CHIP 10K 1/10W (1608)
R111	1-218-847-11	s	RESISTOR, CHIP 1K 1/10W (1608)
R112	1-218-871-11	s	RESISTOR,CHIP 10K 1/10W (1608)
R113	1-218-879-11	s	RESISTOR,CHIP 22K 1/10W (1608)
R114	1-218-879-11	s	RESISTOR,CHIP 22K 1/10W (1608)
R115	1-218-855-11	s	RESISTOR,CHIP 2.2K 1/10W(1608)
R116	1-218-855-11	s	RESISTOR,CHIP 2.2K 1/10W(1608)
R150	1-218-847-11	s	RESISTOR, CHIP 1K 1/10W (1608)
R200	1-218-871-11	s	RESISTOR,CHIP 10K 1/10W (1608)
R201	1-218-871-11	s	RESISTOR,CHIP 10K 1/10W (1608)
R202	1-218-863-11	s	RESISTOR,CHIP 4.7K 1/10W(1608)
R203	1-218-863-11	s	RESISTOR,CHIP 4.7K 1/10W(1608)
R204	1-218-871-11	s	RESISTOR,CHIP 10K 1/10W (1608)
R205	1-218-871-11	s	RESISTOR,CHIP 10K 1/10W (1608)
R206	1-218-871-11	s	RESISTOR,CHIP 10K 1/10W (1608)
R207	1-218-871-11	s	RESISTOR,CHIP 10K 1/10W (1608)
R208	1-218-871-11	s	RESISTOR,CHIP 10K 1/10W (1608)
R209	1-218-871-11	s	RESISTOR,CHIP 10K 1/10W (1608)
R210	1-218-871-11	s	RESISTOR,CHIP 10K 1/10W (1608)
R211	1-218-847-11	s	RESISTOR, CHIP 1K 1/10W (1608)
R212	1-218-871-11	s	RESISTOR,CHIP 10K 1/10W (1608)
R213	1-218-879-11	s	RESISTOR,CHIP 22K 1/10W (1608)
R214	1-218-879-11	s	RESISTOR,CHIP 22K 1/10W (1608)
R215	1-218-855-11	s	RESISTOR,CHIP 2.2K 1/10W(1608)
R216	1-218-855-11	s	RESISTOR,CHIP 2.2K 1/10W(1608)
R250	1-218-847-11	s	RESISTOR, CHIP 1K 1/10W (1608)
R300	1-218-831-11	s	RESISTOR, CHIP 220 1/10W(1608)
R301	1-218-833-11	s	RESISTOR,CHIP 270 1/10W (1608)
R302	1-218-847-11	s	RESISTOR, CHIP 1K 1/10W (1608)
R303	1-218-847-11	s	RESISTOR, CHIP 1K 1/10W (1608)
R304	1-216-864-11	s	CONDUCTOR, CHIP (1608)
R500	1-218-855-11	s	RESISTOR,CHIP 2.2K 1/10W(1608)
R501	1-218-855-11	s	RESISTOR,CHIP 2.2K 1/10W(1608)
R502	1-218-837-11	s	RESISTOR,CHIP 390 1/10W (1608)
R503	1-218-837-11	s	RESISTOR,CHIP 390 1/10W (1608)
R504	1-211-981-11	s	RESISTOR,CHIP 33 1/10W (1608)
R505	1-218-831-11	s	RESISTOR, CHIP 220 1/10W(1608)
R508	1-218-879-11	s	RESISTOR,CHIP 22K 1/10W (1608)
R509	1-218-871-11	s	RESISTOR,CHIP 10K 1/10W (1608)
R510	1-218-823-11	s	RESISTOR,CHIP 100 1/10W (1608)

(AU-272 BOARD [SUFFIX 13-])

Ref. No. or Q'ty	Part No.	SP	Description
R511	1-218-859-11	s	RESISTOR,CHIP 3.3K 1/10W(1608)
R512	1-218-859-11	s	RESISTOR,CHIP 3.3K 1/10W(1608)
R513	1-218-859-11	s	RESISTOR,CHIP 3.3K 1/10W(1608)
R514	1-218-855-11	s	RESISTOR,CHIP 2.2K 1/10W(1608)
R515	1-218-823-11	s	RESISTOR,CHIP 100 1/10W (1608)
R516	1-218-823-11	s	RESISTOR,CHIP 100 1/10W (1608)
R517	1-218-855-11	s	RESISTOR,CHIP 2.2K 1/10W(1608)
R518	1-218-855-11	s	RESISTOR,CHIP 2.2K 1/10W(1608)
R519	1-218-837-11	s	RESISTOR,CHIP 390 1/10W (1608)
R520	1-218-837-11	s	RESISTOR,CHIP 390 1/10W (1608)
R521	1-218-837-11	s	RESISTOR,CHIP 390 1/10W (1608)
R522	1-218-837-11	s	RESISTOR,CHIP 390 1/10W (1608)
R523	1-218-855-11	s	RESISTOR,CHIP 2.2K 1/10W(1608)
R524	1-218-855-11	s	RESISTOR,CHIP 2.2K 1/10W(1608)
R530	1-218-825-11	s	RESISTOR,CHIP 120 1/10W (1608)
R531	1-218-825-11	s	RESISTOR,CHIP 120 1/10W (1608)
R533	1-218-823-11	s	RESISTOR,CHIP 100 1/10W (1608)
R534	1-218-823-11	s	RESISTOR,CHIP 100 1/10W (1608)
R535	1-218-823-11	s	RESISTOR,CHIP 100 1/10W (1608)
R536	1-218-825-11	s	RESISTOR,CHIP 120 1/10W (1608)
R537	1-218-825-11	s	RESISTOR,CHIP 120 1/10W (1608)
R538	1-218-825-11	s	RESISTOR,CHIP 120 1/10W (1608)
R539	1-218-825-11	s	RESISTOR,CHIP 120 1/10W (1608)
R550	1-218-887-11	s	RESISTOR,CHIP 47K 1/10W (1608)
R551	1-218-823-11	s	RESISTOR,CHIP 100 1/10W (1608)
R552	1-218-887-11	s	RESISTOR,CHIP 47K 1/10W (1608)
R553	1-218-847-11	s	RESISTOR, CHIP 1K 1/10W (1608)
R554	1-218-887-11	s	RESISTOR,CHIP 47K 1/10W (1608)
R555	1-218-823-11	s	RESISTOR,CHIP 100 1/10W (1608)
R556	1-218-887-11	s	RESISTOR,CHIP 47K 1/10W (1608)
R557	1-218-823-11	s	RESISTOR,CHIP 100 1/10W (1608)
R558	1-218-887-11	s	RESISTOR,CHIP 47K 1/10W (1608)
R559	1-218-823-11	s	RESISTOR,CHIP 100 1/10W (1608)
R560	1-218-887-11	s	RESISTOR,CHIP 47K 1/10W (1608)
R561	1-218-887-11	s	RESISTOR,CHIP 47K 1/10W (1608)
R562	1-218-823-11	s	RESISTOR,CHIP 100 1/10W (1608)
R563	1-218-823-11	s	RESISTOR,CHIP 100 1/10W (1608)
R564	1-218-887-11	s	RESISTOR,CHIP 47K 1/10W (1608)
R565	1-218-823-11	s	RESISTOR,CHIP 100 1/10W (1608)
R566	1-218-823-11	s	RESISTOR,CHIP 100 1/10W (1608)
R567	1-218-839-11	s	RESISTOR,CHIP 470 1/10W (1608)
R568	1-218-865-11	s	RESISTOR,CHIP 5.6K 1/10W(1608)
R569	1-218-839-11	s	RESISTOR,CHIP 470 1/10W (1608)
R570	1-218-867-11	s	RESISTOR,CHIP 6.8K 1/10W(1608)
R571	1-218-863-11	s	RESISTOR,CHIP 4.7K 1/10W(1608)
R572	1-218-847-11	s	RESISTOR, CHIP 1K 1/10W (1608)
R573	1-218-859-11	s	RESISTOR,CHIP 3.3K 1/10W(1608)
R574	1-218-855-11	s	RESISTOR,CHIP 2.2K 1/10W(1608)
R575	1-218-871-11	s	RESISTOR,CHIP 10K 1/10W (1608)
R576	1-218-855-11	s	RESISTOR,CHIP 2.2K 1/10W(1608)
R577	1-218-887-11	s	RESISTOR,CHIP 47K 1/10W (1608)
R578	1-218-871-11	s	RESISTOR,CHIP 10K 1/10W (1608)
R579	1-218-871-11	s	RESISTOR,CHIP 10K 1/10W (1608)
R580	1-218-863-11	s	RESISTOR,CHIP 4.7K 1/10W(1608)
R581	1-218-843-11	s	RESISTOR,CHIP 680 1/10W (1608)
R582	1-218-831-11	s	RESISTOR, CHIP 220 1/10W(1608)
R583	1-218-895-11	s	RESISTOR,CHIP 100K 1/10W(1608)
R584	1-218-863-11	s	RESISTOR,CHIP 4.7K 1/10W(1608)
R585	1-218-853-11	s	RESISTOR,CHIP 1.8K 1/10W(1608)

(AU-272 BOARD [SUFFIX 13-])

Ref. No. or Q'ty	Part No.	SP	Description
R600	1-218-823-11	s	RESISTOR,CHIP 100 1/10W (1608)
R601	1-218-887-11	s	RESISTOR,CHIP 47K 1/10W (1608)
R602	1-218-871-11	s	RESISTOR,CHIP 10K 1/10W (1608)
R603	1-218-855-11	s	RESISTOR,CHIP 2.2K 1/10W(1608)
R604	1-218-871-11	s	RESISTOR,CHIP 10K 1/10W (1608)
R605	1-218-853-11	s	RESISTOR,CHIP 1.8K 1/10W(1608)
R606	1-218-855-11	s	RESISTOR,CHIP 2.2K 1/10W(1608)
R607	1-218-847-11	s	RESISTOR, CHIP 1K 1/10W (1608)
R608	1-218-853-11	s	RESISTOR,CHIP 1.8K 1/10W(1608)
R609	1-218-853-11	s	RESISTOR,CHIP 1.8K 1/10W(1608)
R610	1-218-857-11	s	RESISTOR,CHIP 2.7K 1/10W(1608)
R611	1-218-857-11	s	RESISTOR,CHIP 2.7K 1/10W(1608)
R612	1-218-839-11	s	RESISTOR,CHIP 470 1/10W (1608)
R613	1-218-837-11	s	RESISTOR,CHIP 390 1/10W (1608)
R614	1-218-823-11	s	RESISTOR,CHIP 100 1/10W (1608)
R615	1-218-895-11	s	RESISTOR,CHIP 100K 1/10W(1608)
R616	1-218-869-11	s	RESISTOR,CHIP 8.2K 1/10W(1608)
R618	1-218-855-11	s	RESISTOR,CHIP 2.2K 1/10W(1608)
R619	1-218-873-11	s	RESISTOR,CHIP 12K 1/10W (1608)
R620	1-218-887-11	s	RESISTOR,CHIP 47K 1/10W (1608)
R621	1-218-855-11	s	RESISTOR,CHIP 2.2K 1/10W(1608)
R622	1-218-903-11	s	RESISTOR,CHIP 220K 1/10W(1608)
R623	1-218-839-11	s	RESISTOR,CHIP 470 1/10W (1608)
R624	1-218-837-11	s	RESISTOR,CHIP 390 1/10W (1608)
R625	1-218-823-11	s	RESISTOR,CHIP 100 1/10W (1608)
R626	1-218-895-11	s	RESISTOR,CHIP 100K 1/10W(1608)
R627	1-218-869-11	s	RESISTOR,CHIP 8.2K 1/10W(1608)
R629	1-218-855-11	s	RESISTOR,CHIP 2.2K 1/10W(1608)
R630	1-218-873-11	s	RESISTOR,CHIP 12K 1/10W (1608)
R631	1-218-887-11	s	RESISTOR,CHIP 47K 1/10W (1608)
R632	1-218-855-11	s	RESISTOR,CHIP 2.2K 1/10W(1608)
R633	1-218-903-11	s	RESISTOR,CHIP 220K 1/10W(1608)
R634	1-218-851-11	s	RESISTOR,CHIP 1.5K 1/10W(1608)
R635	1-218-851-11	s	RESISTOR,CHIP 1.5K 1/10W(1608)
R636	1-218-879-11	s	RESISTOR,CHIP 22K 1/10W (1608)
R637	1-218-879-11	s	RESISTOR,CHIP 22K 1/10W (1608)
R638	1-218-879-11	s	RESISTOR,CHIP 22K 1/10W (1608)
R639	1-218-873-11	s	RESISTOR,CHIP 12K 1/10W (1608)
R640	1-218-865-11	s	RESISTOR,CHIP 5.6K 1/10W(1608)
R641	1-218-871-11	s	RESISTOR,CHIP 10K 1/10W (1608)
R642	1-211-985-11	s	RESISTOR,CHIP 47 1/10W (1608)
R643	1-218-871-11	s	RESISTOR,CHIP 10K 1/10W (1608)
R644	1-218-857-11	s	RESISTOR,CHIP 2.7K 1/10W(1608)
R645	1-218-843-11	s	RESISTOR,CHIP 680 1/10W (1608)
R646	1-218-855-11	s	RESISTOR,CHIP 2.2K 1/10W(1608)
R647	1-218-861-11	s	RESISTOR,CHIP 3.9K 1/10W(1608)
R648	1-218-873-11	s	RESISTOR,CHIP 12K 1/10W (1608)
R649	1-218-863-11	s	RESISTOR,CHIP 4.7K 1/10W(1608)
R650	1-218-895-11	s	RESISTOR,CHIP 100K 1/10W(1608)
R651	1-218-859-11	s	RESISTOR,CHIP 3.3K 1/10W(1608)
R652	1-218-859-11	s	RESISTOR,CHIP 3.3K 1/10W(1608)
R654	1-218-857-11	s	RESISTOR,CHIP 2.7K 1/10W(1608)
R656	1-218-879-11	s	RESISTOR,CHIP 22K 1/10W (1608)
R657	1-218-863-11	s	RESISTOR,CHIP 4.7K 1/10W(1608)
R658	1-218-863-11	s	RESISTOR,CHIP 4.7K 1/10W(1608)
R659	1-218-863-11	s	RESISTOR,CHIP 4.7K 1/10W(1608)
R660	1-218-871-11	s	RESISTOR,CHIP 10K 1/10W (1608)
R670	1-218-871-11	s	RESISTOR,CHIP 10K 1/10W (1608)
R671	1-218-859-11	s	RESISTOR,CHIP 3.3K 1/10W(1608)

(AU-272 BOARD [SUFFIX 13-])

Ref. No. or Q'ty	Part No.	SP	Description
R672	1-218-825-11	s	RESISTOR,CHIP 120 1/10W (1608)
R673	1-218-871-11	s	RESISTOR,CHIP 10K 1/10W (1608)
R674	1-218-859-11	s	RESISTOR,CHIP 3.3K 1/10W(1608)
R675	1-218-825-11	s	RESISTOR,CHIP 120 1/10W (1608)
R676	1-218-873-11	s	RESISTOR,CHIP 12K 1/10W (1608)
R677	1-218-879-11	s	RESISTOR,CHIP 22K 1/10W (1608)
R678	1-218-873-11	s	RESISTOR,CHIP 12K 1/10W (1608)
R679	1-218-879-11	s	RESISTOR,CHIP 22K 1/10W (1608)
R682	1-218-871-11	s	RESISTOR,CHIP 10K 1/10W (1608)
R700	1-218-871-11	s	RESISTOR,CHIP 10K 1/10W (1608)
R701	1-218-871-11	s	RESISTOR,CHIP 10K 1/10W (1608)
R702	1-218-871-11	s	RESISTOR,CHIP 10K 1/10W (1608)
R703	1-218-841-11	s	RESISTOR,CHIP 560 1/10W (1608)
R704	1-218-881-11	s	RESISTOR, CHIP 27K 1/10W(1608)
R705	1-218-871-11	s	RESISTOR,CHIP 10K 1/10W (1608)
R706	1-218-879-11	s	RESISTOR,CHIP 22K 1/10W (1608)
R707	1-218-883-11	s	RESISTOR,CHIP 33K 1/10W (1608)
R708	1-218-863-11	s	RESISTOR,CHIP 4.7K 1/10W(1608)
R709	1-218-835-11	s	RESISTOR,CHIP 330 1/10W (1608)
R710	1-218-881-11	s	RESISTOR, CHIP 27K 1/10W(1608)
R711	1-218-885-11	s	RESISTOR,CHIP 39K 1/10W (1608)
R712	1-218-883-11	s	RESISTOR,CHIP 33K 1/10W (1608)
R713	1-218-871-11	s	RESISTOR,CHIP 10K 1/10W (1608)
R714	1-218-907-11	s	RESISTOR,CHIP 330K 1/10W(1608)
R715	1-218-855-11	s	RESISTOR,CHIP 2.2K 1/10W(1608)
R716	1-218-895-11	s	RESISTOR,CHIP 100K 1/10W(1608)
R717	1-218-853-11	s	RESISTOR,CHIP 1.8K 1/10W(1608)
R718	1-218-853-11	s	RESISTOR,CHIP 1.8K 1/10W(1608)
R719	1-218-857-11	s	RESISTOR,CHIP 2.7K 1/10W(1608)
R720	1-218-857-11	s	RESISTOR,CHIP 2.7K 1/10W(1608)
R721	1-218-839-11	s	RESISTOR,CHIP 470 1/10W (1608)
R722	1-218-837-11	s	RESISTOR,CHIP 390 1/10W (1608)
R723	1-218-823-11	s	RESISTOR,CHIP 100 1/10W (1608)
R724	1-218-895-11	s	RESISTOR,CHIP 100K 1/10W(1608)
R725	1-218-867-11	s	RESISTOR,CHIP 6.8K 1/10W(1608)
R726	1-218-823-11	s	RESISTOR,CHIP 100 1/10W (1608)
R727	1-218-855-11	s	RESISTOR,CHIP 2.2K 1/10W(1608)
R728	1-218-873-11	s	RESISTOR,CHIP 12K 1/10W (1608)
R729	1-218-887-11	s	RESISTOR,CHIP 47K 1/10W (1608)
R730	1-218-855-11	s	RESISTOR,CHIP 2.2K 1/10W(1608)
R731	1-218-903-11	s	RESISTOR,CHIP 220K 1/10W(1608)
R732	1-218-839-11	s	RESISTOR,CHIP 470 1/10W (1608)
R733	1-218-837-11	s	RESISTOR,CHIP 390 1/10W (1608)
R734	1-218-823-11	s	RESISTOR,CHIP 100 1/10W (1608)
R735	1-218-895-11	s	RESISTOR,CHIP 100K 1/10W(1608)
R736	1-218-867-11	s	RESISTOR,CHIP 6.8K 1/10W(1608)
R737	1-218-823-11	s	RESISTOR,CHIP 100 1/10W (1608)
R738	1-218-855-11	s	RESISTOR,CHIP 2.2K 1/10W(1608)
R739	1-218-873-11	s	RESISTOR,CHIP 12K 1/10W (1608)
R740	1-218-887-11	s	RESISTOR,CHIP 47K 1/10W (1608)
R741	1-218-855-11	s	RESISTOR,CHIP 2.2K 1/10W(1608)
R742	1-218-903-11	s	RESISTOR,CHIP 220K 1/10W(1608)
R743	1-218-851-11	s	RESISTOR,CHIP 1.5K 1/10W(1608)
R744	1-218-851-11	s	RESISTOR,CHIP 1.5K 1/10W(1608)
R745	1-218-879-11	s	RESISTOR,CHIP 22K 1/10W (1608)
R746	1-218-879-11	s	RESISTOR,CHIP 22K 1/10W (1608)
R747	1-218-879-11	s	RESISTOR,CHIP 22K 1/10W (1608)
R748	1-218-873-11	s	RESISTOR,CHIP 12K 1/10W (1608)
R749	1-218-871-11	s	RESISTOR,CHIP 10K 1/10W (1608)

(AU-272 BOARD [SUFFIX 13-])

Ref. No. or Q'ty	Part No.	SP	Description
R750	1-211-985-11	s	RESISTOR,CHIP 47 1/10W (1608)
R751	1-218-871-11	s	RESISTOR,CHIP 10K 1/10W (1608)
R752	1-218-857-11	s	RESISTOR,CHIP 2.7K 1/10W(1608)
R753	1-218-855-11	s	RESISTOR,CHIP 2.2K 1/10W(1608)
R754	1-218-843-11	s	RESISTOR,CHIP 680 1/10W (1608)
R755	1-218-861-11	s	RESISTOR,CHIP 3.9K 1/10W(1608)
R756	1-218-873-11	s	RESISTOR,CHIP 12K 1/10W (1608)
R757	1-218-859-11	s	RESISTOR,CHIP 3.3K 1/10W(1608)
R758	1-218-859-11	s	RESISTOR,CHIP 3.3K 1/10W(1608)
R759	1-218-857-11	s	RESISTOR,CHIP 2.7K 1/10W(1608)
R760	1-218-863-11	s	RESISTOR,CHIP 4.7K 1/10W(1608)
R761	1-218-879-11	s	RESISTOR,CHIP 22K 1/10W (1608)
R762	1-218-863-11	s	RESISTOR,CHIP 4.7K 1/10W(1608)
R763	1-218-863-11	s	RESISTOR,CHIP 4.7K 1/10W(1608)
R764	1-218-863-11	s	RESISTOR,CHIP 4.7K 1/10W(1608)
R765	1-218-871-11	s	RESISTOR,CHIP 10K 1/10W (1608)
R770	1-218-847-11	s	RESISTOR, CHIP 1K 1/10W (1608)
R771	1-218-823-11	s	RESISTOR,CHIP 100 1/10W (1608)
R772	1-218-823-11	s	RESISTOR,CHIP 100 1/10W (1608)
R773	1-218-873-11	s	RESISTOR,CHIP 12K 1/10W (1608)
R774	1-218-879-11	s	RESISTOR,CHIP 22K 1/10W (1608)
R775	1-218-873-11	s	RESISTOR,CHIP 12K 1/10W (1608)
R776	1-218-879-11	s	RESISTOR,CHIP 22K 1/10W (1608)
R779	1-218-871-11	s	RESISTOR,CHIP 10K 1/10W (1608)
R780	1-216-857-11	s	RESISTOR,CHIP 1M 1/10W(1608)
RV100	1-241-263-11	s	RESISTOR ADJ 5K (CERMET)
RV101	1-241-263-11	s	RESISTOR ADJ 5K (CERMET)
RV200	1-241-263-11	s	RESISTOR ADJ 5K (CERMET)
RV201	1-241-263-11	s	RESISTOR ADJ 5K (CERMET)
RV500	1-225-789-21	s	RES, ADJ, CERMET 2K
RV501	1-225-791-21	s	RES, ADJ, CERMET 5K
RV600	1-241-265-11	s	RESISTOR ADJ 20K (CERMET)
RV601	1-241-264-11	s	RESISTOR ADJ 10K (CERMET)
RV700	1-241-265-11	s	RESISTOR ADJ 20K (CERMET)
RV701	1-241-264-11	s	RESISTOR ADJ 10K (CERMET)
S101	1-692-270-41	s	SWITCH, SLIDE
S201	1-692-270-41	s	SWITCH, SLIDE
S600	1-692-270-41	s	SWITCH, SLIDE
S700	1-692-270-41	s	SWITCH, SLIDE
TP100	1-535-877-22	s	CHIP,CHECKER (TEST POINT)
TP200	1-535-877-22	s	CHIP,CHECKER (TEST POINT)
TP500	1-535-877-22	s	CHIP,CHECKER (TEST POINT)
TP501	1-535-877-22	s	CHIP,CHECKER (TEST POINT)
TP502	1-535-877-22	s	CHIP,CHECKER (TEST POINT)
TP503	1-535-877-22	s	CHIP,CHECKER (TEST POINT)
TP504	1-535-877-22	s	CHIP,CHECKER (TEST POINT)
TP550	1-535-877-22	s	CHIP,CHECKER (TEST POINT)
TP551	1-535-877-22	s	CHIP,CHECKER (TEST POINT)
TP552	1-535-877-22	s	CHIP,CHECKER (TEST POINT)
TP600	1-535-877-22	s	CHIP,CHECKER (TEST POINT)
TP601	1-535-877-22	s	CHIP,CHECKER (TEST POINT)
TP700	1-535-877-22	s	CHIP,CHECKER (TEST POINT)
TP701	1-535-877-22	s	CHIP,CHECKER (TEST POINT)

AU-272HS BOARD

[Lot No. 462 -] [SUFFIX 13 -] HDW-S2000/P

Ref. No. or Q'ty	Part No.	SP	Description
1pc	A-1061-236-A	s	MOUNTED C.BOARD, AU-272HS
1pc	3-179-085-11	s	LEVER(L),PRINTED C.BOARD
C100	1-164-315-11	s	CAPACITOR,CERAMIC 470PF/50V CH
C101	1-109-864-11	s	CAPACITOR CHIP CERAMIC 68PF
C102	1-162-959-11	s	CAPACITOR,CERAMIC 330PF/50V SL
C103	1-164-315-11	s	CAPACITOR,CERAMIC 470PF/50V CH
C104	1-164-816-11	s	CAPACITOR,CERAMIC 220PF/50V CH
C105	1-135-822-11	s	CAPACITOR,CHIP FILM 0.0022MF
C106	1-164-315-11	s	CAPACITOR,CERAMIC 470PF/50V CH
C107	1-115-154-11	s	CAPACITOR ELECT 10MF/16V(BP)
C108	1-127-955-11	s	CAPACITOR,FILM 0.068MF (3225)
C109	1-162-919-11	s	CAPACITOR,CERAMIC 22PF/50V CH
C110	1-162-919-11	s	CAPACITOR,CERAMIC 22PF/50V CH
C111	1-115-154-11	s	CAPACITOR ELECT 10MF/16V(BP)
C112	1-115-154-11	s	CAPACITOR ELECT 10MF/16V(BP)
C113	1-107-826-11	s	CAPACITOR,CHIP CERAMIC 0.1MF
C114	1-107-826-11	s	CAPACITOR,CHIP CERAMIC 0.1MF
C115	1-164-816-11	s	CAPACITOR,CERAMIC 220PF/50V CH
C120	1-126-394-11	s	CAPACITOR,ELECT 10MF/16V(CHIP)
C121	1-126-394-11	s	CAPACITOR,ELECT 10MF/16V(CHIP)
C200	1-164-315-11	s	CAPACITOR,CERAMIC 470PF/50V CH
C201	1-109-864-11	s	CAPACITOR CHIP CERAMIC 68PF
C202	1-162-959-11	s	CAPACITOR,CERAMIC 330PF/50V SL
C203	1-164-315-11	s	CAPACITOR,CERAMIC 470PF/50V CH
C204	1-164-816-11	s	CAPACITOR,CERAMIC 220PF/50V CH
C205	1-135-822-11	s	CAPACITOR,CHIP FILM 0.0022MF
C206	1-164-315-11	s	CAPACITOR,CERAMIC 470PF/50V CH
C207	1-115-154-11	s	CAPACITOR ELECT 10MF/16V(BP)
C208	1-127-955-11	s	CAPACITOR,FILM 0.068MF (3225)
C209	1-128-451-11	s	CAPACITOR ELECT 22MF/16V(105C)
C210	1-128-451-11	s	CAPACITOR ELECT 22MF/16V(105C)
C211	1-162-919-11	s	CAPACITOR,CERAMIC 22PF/50V CH
C212	1-162-919-11	s	CAPACITOR,CERAMIC 22PF/50V CH
C213	1-115-154-11	s	CAPACITOR ELECT 10MF/16V(BP)
C214	1-115-154-11	s	CAPACITOR ELECT 10MF/16V(BP)
C215	1-164-816-11	s	CAPACITOR,CERAMIC 220PF/50V CH
C300	1-126-394-11	s	CAPACITOR,ELECT 10MF/16V(CHIP)
C301	1-126-394-11	s	CAPACITOR,ELECT 10MF/16V(CHIP)
C302	1-107-418-11	s	CAPACITOR,CHIP ELECT 10MF 35V
C303	1-107-418-11	s	CAPACITOR,CHIP ELECT 10MF 35V
C304	1-128-451-11	s	CAPACITOR ELECT 22MF/16V(105C)
C305	1-128-451-11	s	CAPACITOR ELECT 22MF/16V(105C)
C307	1-126-394-11	s	CAPACITOR,ELECT 10MF/16V(CHIP)
C308	1-107-418-11	s	CAPACITOR,CHIP ELECT 10MF 35V
C309	1-107-418-11	s	CAPACITOR,CHIP ELECT 10MF 35V
C311	1-126-394-11	s	CAPACITOR,ELECT 10MF/16V(CHIP)
C312	1-162-970-11	s	CAPACITOR CERAMIC 0.01MF/25V B
C315	1-107-826-11	s	CAPACITOR,CHIP CERAMIC 0.1MF
C317	1-107-826-11	s	CAPACITOR,CHIP CERAMIC 0.1MF
C318	1-107-826-11	s	CAPACITOR,CHIP CERAMIC 0.1MF
C319	1-107-826-11	s	CAPACITOR,CHIP CERAMIC 0.1MF
C550	1-107-826-11	s	CAPACITOR,CHIP CERAMIC 0.1MF
C661	1-115-154-11	s	CAPACITOR ELECT 10MF/16V(BP)
C662	1-115-154-11	s	CAPACITOR ELECT 10MF/16V(BP)
C758	1-115-154-11	s	CAPACITOR ELECT 10MF/16V(BP)
C759	1-115-154-11	s	CAPACITOR ELECT 10MF/16V(BP)

(AU-272HS BOARD)

Ref. No. or Q'ty	Part No.	SP	Description
CN3	1-778-262-12	o	CONNECTOR, BOARD TO BOARD 148P
D301	8-719-975-40	s	DIODE RB411D (RECTI)
D302	8-719-975-40	s	DIODE RB411D (RECTI)
D303	8-719-975-40	s	DIODE RB411D (RECTI)
D304	8-719-975-40	s	DIODE RB411D (RECTI)
E1	1-535-877-22	s	CHIP,CHECKER (TEST POINT)
E2	1-535-877-22	s	CHIP,CHECKER (TEST POINT)
E3	1-535-877-22	s	CHIP,CHECKER (TEST POINT)
IC100	8-759-711-85	s	IC NJM4580E-D
IC101	8-759-711-85	s	IC NJM4580E-D
IC102	8-741-164-50	s	IC SBX1645-01 (HYBRID)
IC103	8-759-700-78	s	IC NJM082M
IC104	8-759-711-85	s	IC NJM4580E-D
IC200	8-759-711-85	s	IC NJM4580E-D
IC201	8-759-711-85	s	IC NJM4580E-D
IC202	8-759-711-85	s	IC NJM4580E-D
IC302	8-759-041-46	s	IC L78M05TLL-SONY-TL
IC303	8-759-662-86	s	IC NJM79M05DL1A(TE2)
IC304	8-759-642-22	s	IC UPC29M05T-E2
IC305	6-701-871-11	s	IC TK72150MCL-G
IC550	8-759-491-50	s	IC TC74VHCT244AFT(EL)
IC607	8-759-711-85	s	IC NJM4580E-D
IC706	8-759-711-85	s	IC NJM4580E-D
PS300	⚠ 1-533-282-21	s	CIRCUIT PROTECTOR 2A (3225)
PS301	⚠ 1-533-282-21	s	CIRCUIT PROTECTOR 2A (3225)
PS302	⚠ 1-533-282-21	s	CIRCUIT PROTECTOR 2A (3225)
PS303	⚠ 1-533-282-21	s	CIRCUIT PROTECTOR 2A (3225)
PS304	⚠ 1-533-282-21	s	CIRCUIT PROTECTOR 2A (3225)
Q100	8-729-928-81	s	TRANSISTOR DTC144EE
R100	1-218-871-11	s	RESISTOR,CHIP 10K 1/10W (1608)
R101	1-218-871-11	s	RESISTOR,CHIP 10K 1/10W (1608)
R102	1-218-863-11	s	RESISTOR,CHIP 4.7K 1/10W(1608)
R103	1-218-863-11	s	RESISTOR,CHIP 4.7K 1/10W(1608)
R104	1-218-871-11	s	RESISTOR,CHIP 10K 1/10W (1608)
R105	1-218-871-11	s	RESISTOR,CHIP 10K 1/10W (1608)
R106	1-218-871-11	s	RESISTOR,CHIP 10K 1/10W (1608)
R107	1-218-871-11	s	RESISTOR,CHIP 10K 1/10W (1608)
R108	1-218-871-11	s	RESISTOR,CHIP 10K 1/10W (1608)
R109	1-218-871-11	s	RESISTOR,CHIP 10K 1/10W (1608)
R110	1-218-871-11	s	RESISTOR,CHIP 10K 1/10W (1608)
R111	1-218-847-11	s	RESISTOR, CHIP 1K 1/10W (1608)
R112	1-218-871-11	s	RESISTOR,CHIP 10K 1/10W (1608)
R113	1-218-879-11	s	RESISTOR,CHIP 22K 1/10W (1608)
R114	1-218-879-11	s	RESISTOR,CHIP 22K 1/10W (1608)
R115	1-218-855-11	s	RESISTOR,CHIP 2.2K 1/10W(1608)
R116	1-218-855-11	s	RESISTOR,CHIP 2.2K 1/10W(1608)
R150	1-218-847-11	s	RESISTOR, CHIP 1K 1/10W (1608)
R200	1-218-871-11	s	RESISTOR,CHIP 10K 1/10W (1608)
R201	1-218-871-11	s	RESISTOR,CHIP 10K 1/10W (1608)
R202	1-218-863-11	s	RESISTOR,CHIP 4.7K 1/10W(1608)
R203	1-218-863-11	s	RESISTOR,CHIP 4.7K 1/10W(1608)
R204	1-218-871-11	s	RESISTOR,CHIP 10K 1/10W (1608)
R205	1-218-871-11	s	RESISTOR,CHIP 10K 1/10W (1608)
R206	1-218-871-11	s	RESISTOR,CHIP 10K 1/10W (1608)
R207	1-218-871-11	s	RESISTOR,CHIP 10K 1/10W (1608)
R208	1-218-871-11	s	RESISTOR,CHIP 10K 1/10W (1608)
R209	1-218-871-11	s	RESISTOR,CHIP 10K 1/10W (1608)

(AU-272HS BOARD)

Ref. No. or Q'ty	Part No.	SP	Description
R210	1-218-871-11	s	RESISTOR,CHIP 10K 1/10W (1608)
R211	1-218-847-11	s	RESISTOR, CHIP 1K 1/10W (1608)
R212	1-218-871-11	s	RESISTOR,CHIP 10K 1/10W (1608)
R213	1-218-879-11	s	RESISTOR,CHIP 22K 1/10W (1608)
R214	1-218-879-11	s	RESISTOR,CHIP 22K 1/10W (1608)
R215	1-218-855-11	s	RESISTOR,CHIP 2.2K 1/10W(1608)
R216	1-218-855-11	s	RESISTOR,CHIP 2.2K 1/10W(1608)
R250	1-218-847-11	s	RESISTOR, CHIP 1K 1/10W (1608)
R300	1-218-831-11	s	RESISTOR, CHIP 220 1/10W(1608)
R301	1-218-833-11	s	RESISTOR,CHIP 270 1/10W (1608)
R302	1-218-847-11	s	RESISTOR, CHIP 1K 1/10W (1608)
R303	1-218-847-11	s	RESISTOR, CHIP 1K 1/10W (1608)
R304	1-216-864-11	s	CONDUCTOR, CHIP (1608)
R550	1-218-887-11	s	RESISTOR,CHIP 47K 1/10W (1608)
R551	1-218-823-11	s	RESISTOR,CHIP 100 1/10W (1608)
R552	1-218-887-11	s	RESISTOR,CHIP 47K 1/10W (1608)
R553	1-218-847-11	s	RESISTOR, CHIP 1K 1/10W (1608)
R554	1-218-887-11	s	RESISTOR,CHIP 47K 1/10W (1608)
R555	1-218-823-11	s	RESISTOR,CHIP 100 1/10W (1608)
R556	1-218-887-11	s	RESISTOR,CHIP 47K 1/10W (1608)
R557	1-218-823-11	s	RESISTOR,CHIP 100 1/10W (1608)
R558	1-218-887-11	s	RESISTOR,CHIP 47K 1/10W (1608)
R559	1-218-823-11	s	RESISTOR,CHIP 100 1/10W (1608)
R560	1-218-887-11	s	RESISTOR,CHIP 47K 1/10W (1608)
R561	1-218-887-11	s	RESISTOR,CHIP 47K 1/10W (1608)
R562	1-218-823-11	s	RESISTOR,CHIP 100 1/10W (1608)
R563	1-218-823-11	s	RESISTOR,CHIP 100 1/10W (1608)
R564	1-218-887-11	s	RESISTOR,CHIP 47K 1/10W (1608)
R565	1-218-823-11	s	RESISTOR,CHIP 100 1/10W (1608)
R566	1-218-823-11	s	RESISTOR,CHIP 100 1/10W (1608)
R656	1-216-864-11	s	CONDUCTOR, CHIP (1608)
R659	1-216-864-11	s	CONDUCTOR, CHIP (1608)
R660	1-216-864-11	s	CONDUCTOR, CHIP (1608)
R682	1-216-864-11	s	CONDUCTOR, CHIP (1608)
R761	1-216-864-11	s	CONDUCTOR, CHIP (1608)
R764	1-216-864-11	s	CONDUCTOR, CHIP (1608)
R765	1-216-864-11	s	CONDUCTOR, CHIP (1608)
R779	1-216-864-11	s	CONDUCTOR, CHIP (1608)
RV100	1-241-263-11	s	RESISTOR ADJ 5K (CERMET)
RV101	1-241-263-11	s	RESISTOR ADJ 5K (CERMET)
RV200	1-241-263-11	s	RESISTOR ADJ 5K (CERMET)
RV201	1-241-263-11	s	RESISTOR ADJ 5K (CERMET)
S101	1-692-270-41	s	SWITCH, SLIDE
S201	1-692-270-41	s	SWITCH, SLIDE
TP100	1-535-877-22	s	CHIP,CHECKER (TEST POINT)
TP200	1-535-877-22	s	CHIP,CHECKER (TEST POINT)

CCM-15 BOARD

Ref. No. or Q'ty	Part No.	SP	Description
1pc	1-648-570-11	o	PRINTED WIRING BOARD, CCM-15
1pc	1-506-468-11	o	PIN,CONNECTOR (3P)

When motor replacement is required, replace it with Gear Box Assembly that includes the motor.

	A-8325-414-A	s	BOX ASSY, GEAR (RP)

CL-29 BOARD

Ref. No. or Q'ty	Part No.	SP	Description
1pc	A-8276-626-B	o	MOUNTED CIRCUIT BOARD, CL-29
or	A-8315-621-A	o	MOUNTED CIRCUIT BOARD, CL-29
1pc	3-171-424-02	o	HOLDER, SENSOR
C1	1-137-150-11	s	CAPACITOR,FILM 0.01MF/100V(PP)
CN930	1-506-477-11	o	PIN,CONNECTOR 12P
CN931	1-564-001-11	o	PIN, CONNECTOR (2P)
CN933	1-573-599-11	s	SOCKET, CONNECTOR FFC/FPC (5P)
CN935	1-564-001-11	o	PIN, CONNECTOR (2P)
D1	8-719-938-07	s	LED GL480
D2	8-719-938-07	s	LED GL480
Q1	8-729-903-81	s	PHOTO TRANSISTOR PT480
Q2	8-729-903-81	s	PHOTO TRANSISTOR PT480
R1	1-247-825-31	s	RESISTOR,CARBON 560 1/4W
R2	1-247-825-31	s	RESISTOR,CARBON 560 1/4W

CP-350 BOARD [SUFFIX 13]
---

*H: [Lot No. 261 - 355] HDW-2000, M2000/P, M2100/P, A2100 MSW-M2100/P
*M: [Lot No. 261 - 355] MSW-2000, M2000/P, A2000/P

Ref. No. or Q'ty	Part No.	SP	Description
1pc	*H A-8327-240-A	o	MOUNTED CIRCUIT BOARD, CP-350A
	*M A-8324-860-A	o	MOUNTED CIRCUIT BOARD, CP-350
C1	*M 1-126-392-11	s	CAPACITOR,CHIP ELECT100MF/6.3V
C2	*M 1-126-392-11	s	CAPACITOR,CHIP ELECT100MF/6.3V
C3	*M 1-126-392-11	s	CAPACITOR,CHIP ELECT100MF/6.3V
C4	1-126-392-11	s	CAPACITOR,CHIP ELECT100MF/6.3V
C5	*M 1-126-392-11	s	CAPACITOR,CHIP ELECT100MF/6.3V
C6	*M 1-126-396-11	s	CAPACITOR,ELECT 47MF/16V(CHIP)
C9	*M 1-164-156-11	s	CAPACITOR,CERAMIC 0.1MF/25V F
C10	1-164-156-11	s	CAPACITOR,CERAMIC 0.1MF/25V F
C11	1-164-156-11	s	CAPACITOR,CERAMIC 0.1MF/25V F
C12	*M 1-164-156-11	s	CAPACITOR,CERAMIC 0.1MF/25V F
C13	*M 1-164-156-11	s	CAPACITOR,CERAMIC 0.1MF/25V F
C14	*M 1-164-156-11	s	CAPACITOR,CERAMIC 0.1MF/25V F
C15	*M 1-164-156-11	s	CAPACITOR,CERAMIC 0.1MF/25V F
C16	*M 1-164-156-11	s	CAPACITOR,CERAMIC 0.1MF/25V F
C17	*M 1-164-156-11	s	CAPACITOR,CERAMIC 0.1MF/25V F
C18	*M 1-164-156-11	s	CAPACITOR,CERAMIC 0.1MF/25V F
C19	*M 1-164-156-11	s	CAPACITOR,CERAMIC 0.1MF/25V F
C20	1-126-396-11	s	CAPACITOR,ELECT 47MF/16V(CHIP)
C21	1-126-396-11	s	CAPACITOR,ELECT 47MF/16V(CHIP)
C22	1-164-156-11	s	CAPACITOR,CERAMIC 0.1MF/25V F
C23	1-164-156-11	s	CAPACITOR,CERAMIC 0.1MF/25V F
C24	1-126-396-11	s	CAPACITOR,ELECT 47MF/16V(CHIP)
C25	1-126-396-11	s	CAPACITOR,ELECT 47MF/16V(CHIP)
C26	*M 1-126-396-11	s	CAPACITOR,ELECT 47MF/16V(CHIP)
C27	1-164-156-11	s	CAPACITOR,CERAMIC 0.1MF/25V F
C28	1-164-156-11	s	CAPACITOR,CERAMIC 0.1MF/25V F
C29	*M 1-164-156-11	s	CAPACITOR,CERAMIC 0.1MF/25V F
CN1	1-750-065-11	o	CONNECTOR, BOARD TO BOARD 60P
CN2	1-573-580-11	s	CONNECTOR, BNC (RECEPTACLE)
CN3	*M 1-573-584-11	s	CONNECTOR, BNC (RECEPTACLE)
CN4	1-573-584-11	s	CONNECTOR, BNC (RECEPTACLE)
CN5	1-573-584-11	s	CONNECTOR, BNC (RECEPTACLE)
CN6	*M 1-573-580-11	s	CONNECTOR, BNC (RECEPTACLE)
CN41	1-778-258-12	o	CONNECTOR, BOARD TO BOARD 124P
D3	8-719-056-65	s	DIODE 1SS372-TE85L
FL1	1-239-896-12	s	FILTER, EMI (SMD)
FL2	1-239-896-12	s	FILTER, EMI (SMD)
FL3	1-239-896-12	s	FILTER, EMI (SMD)
FL4	1-239-896-12	s	FILTER, EMI (SMD)
FL5	1-239-896-12	s	FILTER, EMI (SMD)
FL6	1-239-896-12	s	FILTER, EMI (SMD)
IC1	8-759-642-22	s	IC UPC29M05T-E2
IC2	8-759-539-89	s	IC LM2990SX-5.0
L1	*M 1-410-389-31	s	INDUCTOR,CHIP 47UH (3225)
L2	1-410-389-31	s	INDUCTOR,CHIP 47UH (3225)
L3	*M 1-410-389-31	s	INDUCTOR,CHIP 47UH (3225)
L4	1-410-389-31	s	INDUCTOR,CHIP 47UH (3225)
Q1	8-729-140-63	s	TRANSISTOR 2SA1611-M5M6
Q2	*M 8-729-140-63	s	TRANSISTOR 2SA1611-M5M6
Q3	*M 8-729-140-63	s	TRANSISTOR 2SA1611-M5M6

(CP-350 BOARD [SUFFIX 13])

Ref. No. or Q'ty		Part No.	SP	Description
Q4	*M	8-729-140-63	s	TRANSISTOR 2SA1611-M5M6
Q5	*M	8-729-140-63	s	TRANSISTOR 2SA1611-M5M6
Q6		8-729-117-32	s	TRANSISTOR 2SC4177
Q7	*M	8-729-117-32	s	TRANSISTOR 2SC4177
Q8	*M	8-729-117-32	s	TRANSISTOR 2SC4177
Q9	*M	8-729-117-32	s	TRANSISTOR 2SC4177
Q10	*M	8-729-117-32	s	TRANSISTOR 2SC4177
R1		1-218-665-11	s	RESISTOR,CHIP 75 1/16W (1608)
R2	*M	1-218-665-11	s	RESISTOR,CHIP 75 1/16W(1608)
R3	*M	1-218-665-11	s	RESISTOR,CHIP 75 1/16W(1608)
R4	*M	1-218-665-11	s	RESISTOR,CHIP 75 1/16W(1608)
R5	*M	1-218-665-11	s	RESISTOR,CHIP 75 1/16W(1608)
R6	*M	1-218-672-11	s	RESISTOR,CHIP 150 1/16W(1608)
R7	*M	1-218-672-11	s	RESISTOR,CHIP 150 1/16W(1608)
R8	*M	1-218-672-11	s	RESISTOR,CHIP 150 1/16W(1608)
R9	*M	1-218-672-11	s	RESISTOR,CHIP 150 1/16W(1608)
R10	*M	1-218-720-11	s	RESISTOR,CHIP 15K 1/16W(1608)
R11	*M	1-218-720-11	s	RESISTOR,CHIP 15K 1/16W(1608)
R12	*M	1-218-720-11	s	RESISTOR,CHIP 15K 1/16W(1608)
R13		1-218-720-11	s	RESISTOR,CHIP 15K 1/16W(1608)
R14	*M	1-218-720-11	s	RESISTOR,CHIP 15K 1/16W(1608)
R15	*M	1-218-660-91	s	RESISTOR,CHIP 47 1/16W (1608)
R16		1-218-660-91	s	RESISTOR,CHIP 47 1/16W (1608)
R17	*M	1-218-660-91	s	RESISTOR,CHIP 47 1/16W (1608)
R18	*M	1-218-660-91	s	RESISTOR,CHIP 47 1/16W (1608)
R19	*M	1-218-660-91	s	RESISTOR,CHIP 47 1/16W (1608)
R20		1-218-688-11	s	RESISTOR,CHIP 680 1/16W(1608)
R21	*M	1-218-688-11	s	RESISTOR,CHIP 680 1/16W(1608)
R22	*M	1-218-688-11	s	RESISTOR,CHIP 680 1/16W(1608)
R23	*M	1-218-688-11	s	RESISTOR,CHIP 680 1/16W(1608)
R24	*M	1-218-688-11	s	RESISTOR,CHIP 680 1/16W(1608)
R25		1-218-660-91	s	RESISTOR,CHIP 47 1/16W (1608)
R26	*M	1-218-660-91	s	RESISTOR,CHIP 47 1/16W (1608)
R27	*M	1-218-660-91	s	RESISTOR,CHIP 47 1/16W (1608)
R28	*M	1-218-660-91	s	RESISTOR,CHIP 47 1/16W (1608)
R29	*M	1-218-660-91	s	RESISTOR,CHIP 47 1/16W (1608)
R30		1-218-688-11	s	RESISTOR,CHIP 680 1/16W(1608)
R31	*M	1-218-688-11	s	RESISTOR,CHIP 680 1/16W(1608)
R32	*M	1-218-688-11	s	RESISTOR,CHIP 680 1/16W(1608)
R33	*M	1-218-688-11	s	RESISTOR,CHIP 680 1/16W(1608)
R34	*M	1-218-688-11	s	RESISTOR,CHIP 680 1/16W(1608)
R35	*M	1-218-652-11	s	RESISTOR,CHIP 22 1/16W (1608)
R36	*M	1-218-652-11	s	RESISTOR,CHIP 22 1/16W (1608)
R37	*M	1-218-652-11	s	RESISTOR,CHIP 22 1/16W (1608)
R38	*M	1-218-652-11	s	RESISTOR,CHIP 22 1/16W (1608)
R39		1-218-652-11	s	RESISTOR,CHIP 22 1/16W (1608)
S1		1-570-157-51	s	SWITCH,SLIDE (1-1-3)
S2	*M	1-570-157-51	s	SWITCH,SLIDE (1-1-3)

CP-350 BOARD [SUFFIX 14-]

---

*H: [Lot No. 361 -] HDW-2000, M2000/P, M2100/P, A2100
[Lot No. 4C2 -] HDW-D2000
[Lot No. 462 -] HDW-S2000/P
[Lot No. 361 -] MSW-M2100/P
[Lot No. 495 -] MSW-M2100E/P
*D: [Lot No. 434 -] DVW-2000/P, M2000/P
[Lot No. 361 -] MSW-2000, M2000/P, A2000/P
[Lot No. 495 -] MSW-M2000E/P

Ref. No. or Q'ty		Part No.	SP	Description
1pc	*H	A-8327-240-A	o	MOUNTED CIRCUIT BOARD, CP-350A
	*D	A-8324-860-A	o	MOUNTED CIRCUIT BOARD, CP-350
C1	*D	1-126-392-11	s	CAPACITOR,CHIP ELECT100MF/6.3V
C2	*D	1-126-392-11	s	CAPACITOR,CHIP ELECT100MF/6.3V
C3	*D	1-126-392-11	s	CAPACITOR,CHIP ELECT100MF/6.3V
C4		1-126-392-11	s	CAPACITOR,CHIP ELECT100MF/6.3V
C5	*D	1-126-392-11	s	CAPACITOR,CHIP ELECT100MF/6.3V
C6	*D	1-126-396-11	s	CAPACITOR,ELECT 47MF/16V(CHIP)
C9	*D	1-131-992-11	s	CAP, CERAMIC 100000PF F 1608
C10		1-131-992-11	s	CAP, CERAMIC 100000PF F 1608
C11		1-131-992-11	s	CAP, CERAMIC 100000PF F 1608
C12	*D	1-131-992-11	s	CAP, CERAMIC 100000PF F 1608
C13	*D	1-131-992-11	s	CAP, CERAMIC 100000PF F 1608
C14	*D	1-131-992-11	s	CAP, CERAMIC 100000PF F 1608
C15	*D	1-131-992-11	s	CAP, CERAMIC 100000PF F 1608
C16	*D	1-131-992-11	s	CAP, CERAMIC 100000PF F 1608
C17	*D	1-131-992-11	s	CAP, CERAMIC 100000PF F 1608
C18	*D	1-131-992-11	s	CAP, CERAMIC 100000PF F 1608
C19	*D	1-131-992-11	s	CAP, CERAMIC 100000PF F 1608
C20		1-126-396-11	s	CAPACITOR,ELECT 47MF/16V(CHIP)
C21		1-126-396-11	s	CAPACITOR,ELECT 47MF/16V(CHIP)
C22		1-131-992-11	s	CAP, CERAMIC 100000PF F 1608
C23		1-131-992-11	s	CAP, CERAMIC 100000PF F 1608
C24		1-126-396-11	s	CAPACITOR,ELECT 47MF/16V(CHIP)
C25		1-126-396-11	s	CAPACITOR,ELECT 47MF/16V(CHIP)
C26	*D	1-126-396-11	s	CAPACITOR,ELECT 47MF/16V(CHIP)
C27		1-131-992-11	s	CAP, CERAMIC 100000PF F 1608
C28		1-131-992-11	s	CAP, CERAMIC 100000PF F 1608
C29	*D	1-131-992-11	s	CAP, CERAMIC 100000PF F 1608
CN1		1-750-065-11	o	CONNECTOR, BOARD TO BOARD 60P
CN2		1-573-580-11	s	CONNECTOR, BNC (RECEPTACLE)
CN3	*D	1-573-584-11	s	CONNECTOR, BNC (RECEPTACLE)
CN4		1-573-584-11	s	CONNECTOR, BNC (RECEPTACLE)
CN5		1-573-584-11	s	CONNECTOR, BNC (RECEPTACLE)
CN6	*D	1-573-580-11	s	CONNECTOR, BNC (RECEPTACLE)
D3		8-719-056-65	s	DIODE 1SS372-TE85L
FL1		1-239-896-12	s	FILTER, EMI (SMD)
FL2		1-239-896-12	s	FILTER, EMI (SMD)
FL3		1-239-896-12	s	FILTER, EMI (SMD)
FL4		1-239-896-12	s	FILTER, EMI (SMD)
FL5		1-239-896-12	s	FILTER, EMI (SMD)
FL6		1-239-896-12	s	FILTER, EMI (SMD)
IC1		8-759-642-22	s	IC UPC29M05T-E2
IC2		8-759-539-89	s	IC LM2990SX-5.0
L1	*D	1-410-389-31	s	INDUCTOR,CHIP 47UH (3225)
L2		1-410-389-31	s	INDUCTOR,CHIP 47UH (3225)
L3	*D	1-410-389-31	s	INDUCTOR,CHIP 47UH (3225)
L4		1-410-389-31	s	INDUCTOR,CHIP 47UH (3225)
Q1		8-729-140-63	s	TRANSISTOR 2SA1611-M5M6
Q2	*D	8-729-140-63	s	TRANSISTOR 2SA1611-M5M6

(CP-350 BOARD [SUFFIX 14-])

Ref. No. or Q'ty	Part No.	SP	Description
Q3	*D 8-729-140-63	s	TRANSISTOR 2SA1611-M5M6
Q4	*D 8-729-140-63	s	TRANSISTOR 2SA1611-M5M6
Q5	*D 8-729-140-63	s	TRANSISTOR 2SA1611-M5M6
Q6	8-729-117-32	s	TRANSISTOR 2SC4177
Q7	*D 8-729-117-32	s	TRANSISTOR 2SC4177
Q8	*D 8-729-117-32	s	TRANSISTOR 2SC4177
Q9	*D 8-729-117-32	s	TRANSISTOR 2SC4177
Q10	*D 8-729-117-32	s	TRANSISTOR 2SC4177
R1	1-211-990-11	s	RESISTOR,CHIP 75 1/10W (1608)
R2	*D 1-211-990-11	s	RESISTOR,CHIP 75 1/10W (1608)
R3	*D 1-211-990-11	s	RESISTOR,CHIP 75 1/10W (1608)
R4	*D 1-211-990-11	s	RESISTOR,CHIP 75 1/10W (1608)
R5	*D 1-211-990-11	s	RESISTOR,CHIP 75 1/10W (1608)
R10	*D 1-218-875-11	s	RESISTOR,CHIP 15K 1/10W (1608)
R11	*D 1-218-875-11	s	RESISTOR,CHIP 15K 1/10W (1608)
R12	*D 1-218-875-11	s	RESISTOR,CHIP 15K 1/10W (1608)
R13	1-218-875-11	s	RESISTOR,CHIP 15K 1/10W (1608)
R14	*D 1-218-875-11	s	RESISTOR,CHIP 15K 1/10W (1608)
R15	*D 1-211-985-11	s	RESISTOR,CHIP 47 1/10W (1608)
R16	1-211-985-11	s	RESISTOR,CHIP 47 1/10W (1608)
R17	*D 1-211-985-11	s	RESISTOR,CHIP 47 1/10W (1608)
R18	*D 1-211-985-11	s	RESISTOR,CHIP 47 1/10W (1608)
R19	*D 1-211-985-11	s	RESISTOR,CHIP 47 1/10W (1608)
R20	1-218-843-11	s	RESISTOR,CHIP 680 1/10W (1608)
R21	*D 1-218-843-11	s	RESISTOR,CHIP 680 1/10W (1608)
R22	*D 1-218-843-11	s	RESISTOR,CHIP 680 1/10W (1608)
R23	*D 1-218-843-11	s	RESISTOR,CHIP 680 1/10W (1608)
R24	*D 1-218-843-11	s	RESISTOR,CHIP 680 1/10W (1608)
R25	1-211-985-11	s	RESISTOR,CHIP 47 1/10W (1608)
R26	*D 1-211-985-11	s	RESISTOR,CHIP 47 1/10W (1608)
R27	*D 1-211-985-11	s	RESISTOR,CHIP 47 1/10W (1608)
R28	*D 1-211-985-11	s	RESISTOR,CHIP 47 1/10W (1608)
R29	*D 1-211-985-11	s	RESISTOR,CHIP 47 1/10W (1608)
R30	1-218-843-11	s	RESISTOR,CHIP 680 1/10W (1608)
R31	*D 1-218-843-11	s	RESISTOR,CHIP 680 1/10W (1608)
R32	*D 1-218-843-11	s	RESISTOR,CHIP 680 1/10W (1608)
R33	*D 1-218-843-11	s	RESISTOR,CHIP 680 1/10W (1608)
R34	*D 1-218-843-11	s	RESISTOR,CHIP 680 1/10W (1608)
R35	*D 1-211-977-11	s	RESISTOR,CHIP 22 1/10W (1608)
R36	*D 1-211-977-11	s	RESISTOR,CHIP 22 1/10W (1608)
R37	*D 1-211-977-11	s	RESISTOR,CHIP 22 1/10W (1608)
R38	*D 1-211-977-11	s	RESISTOR,CHIP 22 1/10W (1608)
R39	1-211-977-11	s	RESISTOR,CHIP 22 1/10W (1608)
S1	1-570-157-51	s	SWITCH,SLIDE (1-1-3)
S2	*D 1-570-157-51	s	SWITCH,SLIDE (1-1-3)

CP-351 BOARD for SY model

---

*H, *R, *E: [Lot No. 261 -] HDW-2000(SY)/M2000(SY)/M2000P
[Lot No. 4C2 -] HDW-D2000(SY)
[Lot No. 462 -] HDW-S2000(SY)/S2000P
[Lot No. 434 -] DVW-2000(SY)M2000(SY)/2000P/M2000P
*A, *R : [Lot No. 261 -] MSW-A2000(SY)/A2000P
*M, *R, *E: [Lot No. 261 -] MSW-M2000(SY)/M2000P
[Lot No. 495 -] MSW-M2000E(SY)/M2000EP
*P, *E : [Lot No. 261 -] HDW-M2100(SY)/M2100P
MSW-M2100(SY)/M2100P
[Lot No. 495 -] MSW-M2100E(SY)/M2100EP

Ref. No. or Q'ty	Part No.	SP	Description
1pc	*H A-8327-242-B	s	MOUNTED CIRCUIT BOARD, CP-351C
	*A A-8324-862-B	s	MOUNTED CIRCUIT BOARD, CP-351
	*M A-8327-676-B	s	MOUNTED CIRCUIT BOARD, CP-351B
	*P A-8327-246-B	s	MOUNTED CIRCUIT BOARD, CP-351D
C100	*R 1-162-927-11	s	CAPACITOR,CERAMIC 100PF/50V CH
C101	*R 1-162-927-11	s	CAPACITOR,CERAMIC 100PF/50V CH
C102	*R 1-162-923-11	s	CAPACITOR,CERAMIC 47PF/50V CH
C130	*R 1-162-966-11	s	CAPACITOR,CERAMIC 2200PF/50V B
C131	*R 1-162-966-11	s	CAPACITOR,CERAMIC 2200PF/50V B
C132	*R 1-162-923-11	s	CAPACITOR,CERAMIC 47PF/50V CH
C133	*R 1-162-966-11	s	CAPACITOR,CERAMIC 2200PF/50V B
C200	*R 1-162-927-11	s	CAPACITOR,CERAMIC 100PF/50V CH
C201	*R 1-162-927-11	s	CAPACITOR,CERAMIC 100PF/50V CH
C230	*R 1-162-966-11	s	CAPACITOR,CERAMIC 2200PF/50V B
C231	*R 1-162-966-11	s	CAPACITOR,CERAMIC 2200PF/50V B
C233	*R 1-162-966-11	s	CAPACITOR,CERAMIC 2200PF/50V B
C300	*R 1-162-927-11	s	CAPACITOR,CERAMIC 100PF/50V CH
C301	*R 1-162-927-11	s	CAPACITOR,CERAMIC 100PF/50V CH
C302	*R 1-162-923-11	s	CAPACITOR,CERAMIC 47PF/50V CH
C330	*R 1-162-966-11	s	CAPACITOR,CERAMIC 2200PF/50V B
C331	*R 1-162-966-11	s	CAPACITOR,CERAMIC 2200PF/50V B
C332	*R 1-162-923-11	s	CAPACITOR,CERAMIC 47PF/50V CH
C333	*R 1-162-966-11	s	CAPACITOR,CERAMIC 2200PF/50V B
C400	*R 1-162-927-11	s	CAPACITOR,CERAMIC 100PF/50V CH
C401	*R 1-162-927-11	s	CAPACITOR,CERAMIC 100PF/50V CH
C430	*R 1-162-966-11	s	CAPACITOR,CERAMIC 2200PF/50V B
C431	*R 1-162-966-11	s	CAPACITOR,CERAMIC 2200PF/50V B
C433	*R 1-162-966-11	s	CAPACITOR,CERAMIC 2200PF/50V B
C500	*H 1-162-927-11	s	CAPACITOR,CERAMIC 100PF/50V CH
C501	*H 1-162-927-11	s	CAPACITOR,CERAMIC 100PF/50V CH
C502	*E 1-162-966-11	s	CAPACITOR,CERAMIC 2200PF/50V B
C503	*E 1-162-966-11	s	CAPACITOR,CERAMIC 2200PF/50V B
C533	*E 1-162-966-11	s	CAPACITOR,CERAMIC 2200PF/50V B
C600	1-162-923-11	s	CAPACITOR,CERAMIC 47PF/50V CH
C601	1-162-966-11	s	CAPACITOR,CERAMIC 2200PF/50V B
C602	1-162-966-11	s	CAPACITOR,CERAMIC 2200PF/50V B
C603	1-162-966-11	s	CAPACITOR,CERAMIC 2200PF/50V B
C604	1-162-966-11	s	CAPACITOR,CERAMIC 2200PF/50V B
C633	1-162-966-11	s	CAPACITOR,CERAMIC 2200PF/50V B
C634	1-162-966-11	s	CAPACITOR,CERAMIC 2200PF/50V B
C700	*R 1-162-927-11	s	CAPACITOR,CERAMIC 100PF/50V CH
C701	*R 1-162-927-11	s	CAPACITOR,CERAMIC 100PF/50V CH
C702	1-162-966-11	s	CAPACITOR,CERAMIC 2200PF/50V B
C703	1-162-966-11	s	CAPACITOR,CERAMIC 2200PF/50V B
C704	1-162-966-11	s	CAPACITOR,CERAMIC 2200PF/50V B
CN1	1-750-065-11	o	CONNECTOR, BOARD TO BOARD 60P
CN100	*R 1-816-670-11	s	CONNECTOR, 3P-XLR (RECEPTACLE)
CN101	1-816-669-11	s	CONNECTOR, 3P-XLR (RECEPTACLE)
CN300	*R 1-816-670-11	s	CONNECTOR, 3P-XLR (RECEPTACLE)
CN301	1-816-669-11	s	CONNECTOR, 3P-XLR (RECEPTACLE)

(CP-351 BOARD for SY model)

Ref. No. or Q'ty	Part No.	SP	Description
CN500	*H 1-766-386-13	s	CONNECTOR, 3P-XLR TYPE(FEMALE)
CN501	*E 1-766-385-13	s	CONNECTOR, 3P-XLR TYPE (MALE)
CN600	1-816-669-11	s	CONNECTOR, 3P-XLR (RECEPTACLE)
CN700	*R 1-766-386-13	s	CONNECTOR, 3P-XLR TYPE(FEMALE)
CN701	1-766-385-13	s	CONNECTOR, 3P-XLR TYPE (MALE)
FB100	*R 1-469-379-11	s	EMI, FERRITE (SMD)
FB103	*R 1-216-295-00	s	CONDUCTOR, CHIP (2012)
FB104	*R 1-216-295-00	s	CONDUCTOR, CHIP (2012)
FB131	*R 1-216-295-00	s	CONDUCTOR, CHIP (2012)
FB133	*R 1-469-379-11	s	EMI, FERRITE (SMD)
FB134	*R 1-216-295-00	s	CONDUCTOR, CHIP (2012)
FB135	*R 1-469-379-11	s	EMI, FERRITE (SMD)
FB136	*R 1-469-379-11	s	EMI, FERRITE (SMD)
FB200	*R 1-469-379-11	s	EMI, FERRITE (SMD)
FB203	*R 1-216-295-00	s	CONDUCTOR, CHIP (2012)
FB231	*R 1-216-295-00	s	CONDUCTOR, CHIP (2012)
FB233	*R 1-469-379-11	s	EMI, FERRITE (SMD)
FB235	*R 1-469-379-11	s	EMI, FERRITE (SMD)
FB236	*R 1-469-379-11	s	EMI, FERRITE (SMD)
FB300	*R 1-469-379-11	s	EMI, FERRITE (SMD)
FB303	*R 1-216-295-00	s	CONDUCTOR, CHIP (2012)
FB304	*R 1-216-295-00	s	CONDUCTOR, CHIP (2012)
FB331	*R 1-216-295-00	s	CONDUCTOR, CHIP (2012)
FB333	*R 1-469-379-11	s	EMI, FERRITE (SMD)
FB334	*R 1-216-295-00	s	CONDUCTOR, CHIP (2012)
FB335	*R 1-469-379-11	s	EMI, FERRITE (SMD)
FB336	*R 1-469-379-11	s	EMI, FERRITE (SMD)
FB400	*R 1-469-379-11	s	EMI, FERRITE (SMD)
FB403	*R 1-216-295-00	s	CONDUCTOR, CHIP (2012)
FB431	*R 1-216-295-00	s	CONDUCTOR, CHIP (2012)
FB433	*R 1-469-379-11	s	EMI, FERRITE (SMD)
FB435	*R 1-469-379-11	s	EMI, FERRITE (SMD)
FB436	*R 1-469-379-11	s	EMI, FERRITE (SMD)
FB500	*H 1-469-379-11	s	EMI, FERRITE (SMD)
FB503	*H 1-216-295-00	s	CONDUCTOR, CHIP (2012)
FB504	*H 1-216-295-00	s	CONDUCTOR, CHIP (2012)
FB505	*R 1-216-295-00	s	CONDUCTOR, CHIP (2012)
FB507	*E 1-500-449-21	o	BEAD, FERRITE (SMD)
FB508	*E 1-469-379-11	s	EMI, FERRITE (SMD)
FB509	*E 1-216-295-00	s	CONDUCTOR, CHIP (2012)
FB510	*E 1-469-379-11	s	EMI, FERRITE (SMD)
FB511	*H 1-469-379-11	s	EMI, FERRITE (SMD)
FB601	1-216-295-00	s	CONDUCTOR, CHIP (2012)
FB602	1-216-295-00	s	CONDUCTOR, CHIP (2012)
FB604	1-216-295-00	s	CONDUCTOR, CHIP (2012)
FB607	1-500-449-21	o	BEAD, FERRITE (SMD)
FB608	1-469-379-11	s	EMI, FERRITE (SMD)
FB609	1-469-379-11	s	EMI, FERRITE (SMD)
FB610	1-469-379-11	s	EMI, FERRITE (SMD)
FB700	*R 1-469-379-11	s	EMI, FERRITE (SMD)
FB703	*R 1-216-295-00	s	CONDUCTOR, CHIP (2012)
FB704	1-216-295-00	s	CONDUCTOR, CHIP (2012)
FB706	1-216-295-00	s	CONDUCTOR, CHIP (2012)
FB707	1-216-295-00	s	CONDUCTOR, CHIP (2012)
FB709	1-469-379-11	s	EMI, FERRITE (SMD)
FB710	1-469-379-11	s	EMI, FERRITE (SMD)
FB711	*R 1-469-379-11	s	EMI, FERRITE (SMD)
FB712	*R 1-469-379-11	s	EMI, FERRITE (SMD)
FB713	*R 1-469-379-11	s	EMI, FERRITE (SMD)

(CP-351 BOARD for SY model)

Ref. No. or Q'ty	Part No.	SP	Description
FB714	*R 1-469-379-11	s	EMI, FERRITE (SMD)
FB715	1-469-379-11	s	EMI, FERRITE (SMD)
FB716	1-469-379-11	s	EMI, FERRITE (SMD)
FB717	1-469-379-11	s	EMI, FERRITE (SMD)
R104	*R 1-220-265-11	s	RESISTOR, CHIP 1.2K 1/4W(3225)
R105	*R 1-220-265-11	s	RESISTOR, CHIP 1.2K 1/4W(3225)
R106	*R 1-216-295-00	s	CONDUCTOR,CHIP (2012)
R107	*R 1-216-295-00	s	CONDUCTOR,CHIP (2012)
R204	*R 1-220-265-11	s	RESISTOR, CHIP 1.2K 1/4W(3225)
R205	*R 1-220-265-11	s	RESISTOR, CHIP 1.2K 1/4W(3225)
R206	*R 1-216-295-00	s	CONDUCTOR,CHIP (2012)
R207	*R 1-216-295-00	s	CONDUCTOR,CHIP (2012)
R304	*R 1-220-265-11	s	RESISTOR, CHIP 1.2K 1/4W(3225)
R305	*R 1-220-265-11	s	RESISTOR, CHIP 1.2K 1/4W(3225)
R306	*R 1-216-295-00	s	CONDUCTOR,CHIP (2012)
R307	*R 1-216-295-00	s	CONDUCTOR,CHIP (2012)
R404	*R 1-220-265-11	s	RESISTOR, CHIP 1.2K 1/4W(3225)
R405	*R 1-220-265-11	s	RESISTOR, CHIP 1.2K 1/4W(3225)
R406	*R 1-216-295-00	s	CONDUCTOR,CHIP (2012)
R407	*R 1-216-295-00	s	CONDUCTOR,CHIP (2012)
R502	*H 1-216-295-00	s	CONDUCTOR,CHIP (2012)
R503	*H 1-220-265-11	s	RESISTOR, CHIP 1.2K 1/4W(3225)
R504	*H 1-220-265-11	s	RESISTOR, CHIP 1.2K 1/4W(3225)
R505	*H 1-216-295-00	s	CONDUCTOR,CHIP (2012)
S100	*R 1-572-042-11	s	SWITCH,SLIDE (2-4-3)
S200	*R 1-572-042-11	s	SWITCH,SLIDE (2-4-3)
S300	*R 1-572-042-11	s	SWITCH,SLIDE (2-4-3)
S400	*R 1-572-042-11	s	SWITCH,SLIDE (2-4-3)
S500	*H 1-572-042-11	s	SWITCH,SLIDE (2-4-3)

CP-351 BOARD for J model
---

*H, *R, *E: [Lot No. 261 -] HDW-2000(J)/M2000(J)
[Lot No. 462 -] HDW-S2000(J)
*A, *R : [Lot No. 261 -] MSW-A2000(J)
*M, *R, *E: [Lot No. 261 -] MSW-M2000(J)
[Lot No. 495 -] MSW-M2000E(J)
*P, *E : [Lot No. 261 -] HDW-M2100(J)/A2100(J)
MSW-M2100(J)
[Lot No. 495 -] MSW-M2100E(J)

Ref. No. or Q'ty	Part No.	SP	Description
1pc	*H A-8327-244-B	s	MOUNTED CIRCUIT BOARD, CP-351CJ
	*A A-8325-089-B	s	MOUNTED CIRCUIT BOARD, CP-351J
	*M A-8327-678-B	s	MOUNTED CIRCUIT BOARD, CP-351BJ
	*P A-8327-248-B	s	MOUNTED CIRCUIT BOARD, CP-351DJ
C100	*R 1-162-927-11	s	CAPACITOR,CERAMIC 100PF/50V CH
C101	*R 1-162-927-11	s	CAPACITOR,CERAMIC 100PF/50V CH
C102	*R 1-162-923-11	s	CAPACITOR,CERAMIC 47PF/50V CH
C130	*R 1-162-966-11	s	CAPACITOR,CERAMIC 2200PF/50V B
C131	*R 1-162-966-11	s	CAPACITOR,CERAMIC 2200PF/50V B
C132	*R 1-162-923-11	s	CAPACITOR,CERAMIC 47PF/50V CH
C133	*R 1-162-966-11	s	CAPACITOR,CERAMIC 2200PF/50V B
C200	*R 1-162-927-11	s	CAPACITOR,CERAMIC 100PF/50V CH
C201	*R 1-162-927-11	s	CAPACITOR,CERAMIC 100PF/50V CH
C230	*R 1-162-966-11	s	CAPACITOR,CERAMIC 2200PF/50V B
C231	*R 1-162-966-11	s	CAPACITOR,CERAMIC 2200PF/50V B
C233	*R 1-162-966-11	s	CAPACITOR,CERAMIC 2200PF/50V B
C300	*R 1-162-927-11	s	CAPACITOR,CERAMIC 100PF/50V CH
C301	*R 1-162-927-11	s	CAPACITOR,CERAMIC 100PF/50V CH
C302	*R 1-162-923-11	s	CAPACITOR,CERAMIC 47PF/50V CH
C330	*R 1-162-966-11	s	CAPACITOR,CERAMIC 2200PF/50V B
C331	*R 1-162-966-11	s	CAPACITOR,CERAMIC 2200PF/50V B
C332	*R 1-162-923-11	s	CAPACITOR,CERAMIC 47PF/50V CH
C333	*R 1-162-966-11	s	CAPACITOR,CERAMIC 2200PF/50V B
C400	*R 1-162-927-11	s	CAPACITOR,CERAMIC 100PF/50V CH
C401	*R 1-162-927-11	s	CAPACITOR,CERAMIC 100PF/50V CH
C430	*R 1-162-966-11	s	CAPACITOR,CERAMIC 2200PF/50V B
C431	*R 1-162-966-11	s	CAPACITOR,CERAMIC 2200PF/50V B
C433	*R 1-162-966-11	s	CAPACITOR,CERAMIC 2200PF/50V B
C500	*H 1-162-927-11	s	CAPACITOR,CERAMIC 100PF/50V CH
C501	*H 1-162-927-11	s	CAPACITOR,CERAMIC 100PF/50V CH
C502	*E 1-162-966-11	s	CAPACITOR,CERAMIC 2200PF/50V B
C503	*E 1-162-966-11	s	CAPACITOR,CERAMIC 2200PF/50V B
C533	*E 1-162-966-11	s	CAPACITOR,CERAMIC 2200PF/50V B
C600	1-162-923-11	s	CAPACITOR,CERAMIC 47PF/50V CH
C601	1-162-966-11	s	CAPACITOR,CERAMIC 2200PF/50V B
C602	1-162-966-11	s	CAPACITOR,CERAMIC 2200PF/50V B
C603	1-162-966-11	s	CAPACITOR,CERAMIC 2200PF/50V B
C604	1-162-966-11	s	CAPACITOR,CERAMIC 2200PF/50V B
C633	1-162-966-11	s	CAPACITOR,CERAMIC 2200PF/50V B
C634	1-162-966-11	s	CAPACITOR,CERAMIC 2200PF/50V B
C700	*R 1-162-927-11	s	CAPACITOR,CERAMIC 100PF/50V CH
C701	*R 1-162-927-11	s	CAPACITOR,CERAMIC 100PF/50V CH
C702	1-162-966-11	s	CAPACITOR,CERAMIC 2200PF/50V B
C703	1-162-966-11	s	CAPACITOR,CERAMIC 2200PF/50V B
C704	1-162-966-11	s	CAPACITOR,CERAMIC 2200PF/50V B
CN1	1-750-065-11	o	CONNECTOR, BOARD TO BOARD 60P
CN100	*R 1-816-669-11	s	CONNECTOR, 3P-XLR (RECEPTACLE)
CN101	1-816-670-11	s	CONNECTOR, 3P-XLR (RECEPTACLE)
CN300	*R 1-816-669-11	s	CONNECTOR, 3P-XLR (RECEPTACLE)
CN301	1-816-670-11	s	CONNECTOR, 3P-XLR (RECEPTACLE)
CN500	*H 1-766-386-13	s	CONNECTOR, 3P-XLR TYPE(FEMALE)
CN501	*E 1-766-385-13	s	CONNECTOR, 3P-XLR TYPE (MALE)

(CP-351 BOARD for J model)

Ref. No. or Q'ty	Part No.	SP	Description
CN600	1-816-670-11	s	CONNECTOR, 3P-XLR (RECEPTACLE)
CN700	*R 1-766-385-13	s	CONNECTOR, 3P-XLR TYPE (MALE)
CN701	1-766-386-13	s	CONNECTOR, 3P-XLR TYPE(FEMALE)
FB101	*R 1-469-379-11	s	EMI, FERRITE (SMD)
FB102	*R 1-216-295-00	s	CONDUCTOR, CHIP (2012)
FB104	*R 1-216-295-00	s	CONDUCTOR, CHIP (2012)
FB130	*R 1-216-295-00	s	CONDUCTOR, CHIP (2012)
FB132	*R 1-469-379-11	s	EMI, FERRITE (SMD)
FB134	*R 1-216-295-00	s	CONDUCTOR, CHIP (2012)
FB135	*R 1-469-379-11	s	EMI, FERRITE (SMD)
FB136	*R 1-469-379-11	s	EMI, FERRITE (SMD)
FB201	*R 1-469-379-11	s	EMI, FERRITE (SMD)
FB202	*R 1-216-295-00	s	CONDUCTOR, CHIP (2012)
FB230	*R 1-216-295-00	s	CONDUCTOR, CHIP (2012)
FB232	*R 1-469-379-11	s	EMI, FERRITE (SMD)
FB235	*R 1-469-379-11	s	EMI, FERRITE (SMD)
FB236	*R 1-469-379-11	s	EMI, FERRITE (SMD)
FB301	*R 1-469-379-11	s	EMI, FERRITE (SMD)
FB302	*R 1-216-295-00	s	CONDUCTOR, CHIP (2012)
FB304	*R 1-216-295-00	s	CONDUCTOR, CHIP (2012)
FB330	*R 1-216-295-00	s	CONDUCTOR, CHIP (2012)
FB332	*R 1-469-379-11	s	EMI, FERRITE (SMD)
FB334	*R 1-216-295-00	s	CONDUCTOR, CHIP (2012)
FB335	*R 1-469-379-11	s	EMI, FERRITE (SMD)
FB336	*R 1-469-379-11	s	EMI, FERRITE (SMD)
FB401	*R 1-469-379-11	s	EMI, FERRITE (SMD)
FB402	*R 1-216-295-00	s	CONDUCTOR, CHIP (2012)
FB430	*R 1-216-295-00	s	CONDUCTOR, CHIP (2012)
FB432	*R 1-469-379-11	s	EMI, FERRITE (SMD)
FB435	*R 1-469-379-11	s	EMI, FERRITE (SMD)
FB436	*R 1-469-379-11	s	EMI, FERRITE (SMD)
FB501	*H 1-500-449-21	o	BEAD, FERRITE (SMD)
FB502	*H 1-216-295-00	s	CONDUCTOR, CHIP (2012)
FB504	*H 1-216-295-00	s	CONDUCTOR, CHIP (2012)
FB505	*H 1-469-379-11	s	EMI, FERRITE (SMD)
FB506	*R 1-216-295-00	s	CONDUCTOR, CHIP (2012)
FB507	*E 1-500-449-21	o	BEAD, FERRITE (SMD)
FB508	*E 1-216-295-00	s	CONDUCTOR, CHIP (2012)
FB510	*E 1-500-449-21	o	BEAD, FERRITE (SMD)
FB511	*H 1-469-379-11	s	EMI, FERRITE (SMD)
FB600	1-216-295-00	s	CONDUCTOR, CHIP (2012)
FB602	1-216-295-00	s	CONDUCTOR, CHIP (2012)
FB603	1-216-295-00	s	CONDUCTOR, CHIP (2012)
FB605	1-469-379-11	s	EMI, FERRITE (SMD)
FB606	1-469-379-11	s	EMI, FERRITE (SMD)
FB609	1-469-379-11	s	EMI, FERRITE (SMD)
FB610	1-469-379-11	s	EMI, FERRITE (SMD)
FB701	*R 1-469-379-11	s	EMI, FERRITE (SMD)
FB702	*R 1-216-295-00	s	CONDUCTOR, CHIP (2012)
FB704	1-216-295-00	s	CONDUCTOR, CHIP (2012)
FB705	1-216-295-00	s	CONDUCTOR, CHIP (2012)
FB707	1-216-295-00	s	CONDUCTOR, CHIP (2012)
FB708	1-469-379-11	s	EMI, FERRITE (SMD)
FB710	1-469-379-11	s	EMI, FERRITE (SMD)
FB711	*R 1-469-379-11	s	EMI, FERRITE (SMD)
FB712	*R 1-469-379-11	s	EMI, FERRITE (SMD)
FB713	*R 1-469-379-11	s	EMI, FERRITE (SMD)
FB714	*R 1-469-379-11	s	EMI, FERRITE (SMD)

(CP-351 BOARD for J model)

Ref. No. or Q'ty	Part No.	SP	Description
FB715	1-469-379-11	s	EMI, FERRITE (SMD)
FB716	1-469-379-11	s	EMI, FERRITE (SMD)
FB717	1-469-379-11	s	EMI, FERRITE (SMD)
R104 *R	1-220-265-11	s	RESISTOR, CHIP 1.2K 1/4W(3225)
R105 *R	1-220-265-11	s	RESISTOR, CHIP 1.2K 1/4W(3225)
R106 *R	1-216-295-00	s	CONDUCTOR,CHIP (2012)
R107 *R	1-216-295-00	s	CONDUCTOR,CHIP (2012)
R204 *R	1-220-265-11	s	RESISTOR, CHIP 1.2K 1/4W(3225)
R205 *R	1-220-265-11	s	RESISTOR, CHIP 1.2K 1/4W(3225)
R206 *R	1-216-295-00	s	CONDUCTOR,CHIP (2012)
R207 *R	1-216-295-00	s	CONDUCTOR,CHIP (2012)
R304 *R	1-220-265-11	s	RESISTOR, CHIP 1.2K 1/4W(3225)
R305 *R	1-220-265-11	s	RESISTOR, CHIP 1.2K 1/4W(3225)
R306 *R	1-216-295-00	s	CONDUCTOR,CHIP (2012)
R307 *R	1-216-295-00	s	CONDUCTOR,CHIP (2012)
R404 *R	1-220-265-11	s	RESISTOR, CHIP 1.2K 1/4W(3225)
R405 *R	1-220-265-11	s	RESISTOR, CHIP 1.2K 1/4W(3225)
R406 *R	1-216-295-00	s	CONDUCTOR,CHIP (2012)
R407 *R	1-216-295-00	s	CONDUCTOR,CHIP (2012)
R502 *H	1-216-864-11	s	RESISTOR,CHIP 0 1/16W (1608)
R503 *H	1-220-265-11	s	RESISTOR, CHIP 1.2K 1/4W(3225)
R504 *H	1-220-265-11	s	RESISTOR, CHIP 1.2K 1/4W(3225)
R505 *H	1-216-864-11	s	RESISTOR,CHIP 0 1/16W (1608)
S100 *R	1-572-042-11	s	SWITCH,SLIDE (2-4-3)
S200 *R	1-572-042-11	s	SWITCH,SLIDE (2-4-3)
S300 *R	1-572-042-11	s	SWITCH,SLIDE (2-4-3)
S400 *R	1-572-042-11	s	SWITCH,SLIDE (2-4-3)
S500 *H	1-572-042-11	s	SWITCH,SLIDE (2-4-3)

CP-371/B/D BOARD [SUFFIX 11] for RECORDER

---

*B: [Lot No. 261 - 355] HDW-2000
*D: [Lot No. 261 - 355] HDW-M2000/P
*M: [Lot No. 261 - 355] MSW-2000, M2000/P, A2000/P

Ref. No. or Q'ty	Part No.	SP	Description
1pc *B	A-8329-646-A	s	MOUNTED CIRCUIT BOARD, CP-371B
*D	A-8329-650-A	s	MOUNTED CIRCUIT BOARD, CP-371D
*M	A-8329-128-A	s	MOUNTED CIRCUIT BOARD, CP-371
2pcs	3-673-910-00	o	SCREW (STEEL)
C1	1-126-396-11	s	CAPACITOR,ELECT 47MF/16V(CHIP)
C2	1-126-396-11	s	CAPACITOR,ELECT 47MF/16V(CHIP)
C3	1-164-156-11	s	CAPACITOR,CERAMIC 0.1MF/25V F
C4	1-164-156-11	s	CAPACITOR,CERAMIC 0.1MF/25V F
C5	1-126-394-11	s	CAPACITOR,ELECT 10MF/16V(CHIP)
C6	1-126-394-11	s	CAPACITOR,ELECT 10MF/16V(CHIP)
C7	1-164-156-11	s	CAPACITOR,CERAMIC 0.1MF/25V F
C8	1-164-156-11	s	CAPACITOR,CERAMIC 0.1MF/25V F
C9	1-126-396-11	s	CAPACITOR,ELECT 47MF/16V(CHIP)
C10	1-164-156-11	s	CAPACITOR,CERAMIC 0.1MF/25V F
C11	1-126-396-11	s	CAPACITOR,ELECT 47MF/16V(CHIP)
C12	1-164-156-11	s	CAPACITOR,CERAMIC 0.1MF/25V F
C100	1-164-156-11	s	CAPACITOR,CERAMIC 0.1MF/25V F
C102	1-162-910-11	s	CAPACITOR,CERAMIC 5PF/50V 1608
C104	1-126-396-11	s	CAPACITOR,ELECT 47MF/16V(CHIP)
C106	1-162-921-11	s	CAPACITOR,CERAMIC 33PF/50V CH
C202	1-162-910-11	s	CAPACITOR,CERAMIC 5PF/50V 1608
C203	1-164-156-11	s	CAPACITOR,CERAMIC 0.1MF/25V F
C204	1-126-396-11	s	CAPACITOR,ELECT 47MF/16V(CHIP)
C205	1-164-156-11	s	CAPACITOR,CERAMIC 0.1MF/25V F
C206	1-162-921-11	s	CAPACITOR,CERAMIC 33PF/50V CH
C301*M*D	1-162-919-11	s	CAPACITOR,CERAMIC 22PF/50V CH
C302*M*D	1-162-910-11	s	CAPACITOR,CERAMIC 5PF/50V 1608
C304*M*D	1-126-396-11	s	CAPACITOR,ELECT 47MF/16V(CHIP)
C306*M*D	1-162-916-11	s	CAPACITOR,CERAMIC 12PF/50V CH
C401*M*D	1-162-919-11	s	CAPACITOR,CERAMIC 22PF/50V CH
C402*M*D	1-162-910-11	s	CAPACITOR,CERAMIC 5PF/50V 1608
C403*M*D	1-164-156-11	s	CAPACITOR,CERAMIC 0.1MF/25V F
C404*M*D	1-126-396-11	s	CAPACITOR,ELECT 47MF/16V(CHIP)
C405*M*D	1-164-156-11	s	CAPACITOR,CERAMIC 0.1MF/25V F
C406*M*D	1-162-916-11	s	CAPACITOR,CERAMIC 12PF/50V CH
C500	1-115-416-11	s	CAPACITOR,CERAMIC 1000PF/25V
C501	1-165-176-11	s	CAPACITOR,CERAMIC 47000PF/16V
C502	1-115-416-11	s	CAPACITOR,CERAMIC 1000PF/25V
C503	1-165-176-11	s	CAPACITOR,CERAMIC 47000PF/16V
C504	1-164-156-11	s	CAPACITOR,CERAMIC 0.1MF/25V F
C505	1-164-156-11	s	CAPACITOR,CERAMIC 0.1MF/25V F
C600 *M	1-115-416-11	s	CAPACITOR,CERAMIC 1000PF/25V
C601 *M	1-165-176-11	s	CAPACITOR,CERAMIC 47000PF/16V
C602 *M	1-115-416-11	s	CAPACITOR,CERAMIC 1000PF/25V
C603 *M	1-165-176-11	s	CAPACITOR,CERAMIC 47000PF/16V
C604 *M	1-164-156-11	s	CAPACITOR,CERAMIC 0.1MF/25V F
C605 *M	1-164-156-11	s	CAPACITOR,CERAMIC 0.1MF/25V F
C701	1-162-927-11	s	CAPACITOR,CERAMIC 100PF/50V CH
C702	1-164-156-11	s	CAPACITOR,CERAMIC 0.1MF/25V F
C703	1-164-156-11	s	CAPACITOR,CERAMIC 0.1MF/25V F
C704	1-162-927-11	s	CAPACITOR,CERAMIC 100PF/50V CH
C705	1-162-927-11	s	CAPACITOR,CERAMIC 100PF/50V CH
C706	1-164-156-11	s	CAPACITOR,CERAMIC 0.1MF/25V F
C707	1-164-156-11	s	CAPACITOR,CERAMIC 0.1MF/25V F
C708	1-162-927-11	s	CAPACITOR,CERAMIC 100PF/50V CH

(CP-371/B/D BOARD [SUFFIX 11] for RECORDER)

Ref. No. or Q'ty	Part No.	SP	Description
C709	1-162-927-11	s	CAPACITOR,CERAMIC 100PF/50V CH
C710	1-164-156-11	s	CAPACITOR,CERAMIC 0.1MF/25V F
C711	1-164-156-11	s	CAPACITOR,CERAMIC 0.1MF/25V F
C712	1-162-927-11	s	CAPACITOR,CERAMIC 100PF/50V CH
C713	1-162-927-11	s	CAPACITOR,CERAMIC 100PF/50V CH
C714	1-164-156-11	s	CAPACITOR,CERAMIC 0.1MF/25V F
C715	1-164-156-11	s	CAPACITOR,CERAMIC 0.1MF/25V F
C716	1-162-927-11	s	CAPACITOR,CERAMIC 100PF/50V CH
C717	1-162-927-11	s	CAPACITOR,CERAMIC 100PF/50V CH
C718	1-162-927-11	s	CAPACITOR,CERAMIC 100PF/50V CH
C719	1-162-927-11	s	CAPACITOR,CERAMIC 100PF/50V CH
C720	1-162-927-11	s	CAPACITOR,CERAMIC 100PF/50V CH
C721	1-162-927-11	s	CAPACITOR,CERAMIC 100PF/50V CH
C722	1-162-927-11	s	CAPACITOR,CERAMIC 100PF/50V CH
C724	1-126-394-11	s	CAPACITOR,ELECT 10MF/16V(CHIP)
C725	1-164-156-11	s	CAPACITOR,CERAMIC 0.1MF/25V F
C726	1-164-156-11	s	CAPACITOR,CERAMIC 0.1MF/25V F
C727	1-164-156-11	s	CAPACITOR,CERAMIC 0.1MF/25V F
C730	1-126-394-11	s	CAPACITOR,ELECT 10MF/16V(CHIP)
C731	1-164-156-11	s	CAPACITOR,CERAMIC 0.1MF/25V F
C732	1-164-156-11	s	CAPACITOR,CERAMIC 0.1MF/25V F
C733	1-162-927-11	s	CAPACITOR,CERAMIC 100PF/50V CH
C734	1-162-927-11	s	CAPACITOR,CERAMIC 100PF/50V CH
C735	1-162-927-11	s	CAPACITOR,CERAMIC 100PF/50V CH
C736	1-162-927-11	s	CAPACITOR,CERAMIC 100PF/50V CH
C737	1-162-927-11	s	CAPACITOR,CERAMIC 100PF/50V CH
C738	1-162-927-11	s	CAPACITOR,CERAMIC 100PF/50V CH
C739	1-162-927-11	s	CAPACITOR,CERAMIC 100PF/50V CH
C740	1-162-927-11	s	CAPACITOR,CERAMIC 100PF/50V CH
C741	1-162-927-11	s	CAPACITOR,CERAMIC 100PF/50V CH
C742	1-162-927-11	s	CAPACITOR,CERAMIC 100PF/50V CH
C746	1-164-156-11	s	CAPACITOR,CERAMIC 0.1MF/25V F
C747	1-104-913-11	s	CAPACITOR,TANTALUM 10MF/16V
C748	1-104-851-11	s	CAPACITOR,TANTALUM 10MF/10V
C749	1-164-156-11	s	CAPACITOR,CERAMIC 0.1MF/25V F
C750	1-162-927-11	s	CAPACITOR,CERAMIC 100PF/50V CH
C751	1-162-927-11	s	CAPACITOR,CERAMIC 100PF/50V CH
C752	1-162-927-11	s	CAPACITOR,CERAMIC 100PF/50V CH
C753	1-164-156-11	s	CAPACITOR,CERAMIC 0.1MF/25V F
C754	1-164-156-11	s	CAPACITOR,CERAMIC 0.1MF/25V F
C755	1-164-156-11	s	CAPACITOR,CERAMIC 0.1MF/25V F
C756	1-164-156-11	s	CAPACITOR,CERAMIC 0.1MF/25V F
C757	1-126-399-11	s	CAPACITOR ELECT 10MF/35V(CHIP)
C758	1-126-399-11	s	CAPACITOR ELECT 10MF/35V(CHIP)
C759	1-164-156-11	s	CAPACITOR,CERAMIC 0.1MF/25V F
C760	1-164-156-11	s	CAPACITOR,CERAMIC 0.1MF/25V F
C761	1-164-156-11	s	CAPACITOR,CERAMIC 0.1MF/25V F
C762	1-164-156-11	s	CAPACITOR,CERAMIC 0.1MF/25V F
C763	1-126-396-11	s	CAPACITOR,ELECT 47MF/16V(CHIP)
C764	1-126-396-11	s	CAPACITOR,ELECT 47MF/16V(CHIP)
CN1 *M	1-794-428-11	s	CONNECTOR ASSY, BNC
*B	1-815-086-11	s	CONNECTOR ASSY, BNC
*D	1-815-306-11	s	CONNECTOR ASSY, BNC
CN10	1-766-727-11	o	SOCKET, D-SUB CONNECTOR (50P)
CN11	1-568-676-11	o	CONNECTOR,D-SUB 9P
CN12	1-568-676-11	o	CONNECTOR,D-SUB 9P
CN13	1-779-759-11	o	CONNECTOR, D-SUB 9P
CN14	1-794-229-11	o	CONNECTOR, ROUND TYPE (RECEPTA
CN15	1-568-674-11	o	CONNECTOR,D-SUB 15P

(CP-371/B/D BOARD [SUFFIX 11] for RECORDER)

Ref. No. or Q'ty	Part No.	SP	Description
CN16	1-568-676-11	o	CONNECTOR,D-SUB 9P
CN710	1-695-223-21	o	PIN,CONNECTOR (SMD) 10P
D1	8-719-056-65	s	DIODE 1SS372-TE85L
D500	8-719-941-23	s	DIODE DA204U
D501	8-719-941-23	s	DIODE DA204U
D600 *M	8-719-941-23	s	DIODE DA204U
D601 *M	8-719-941-23	s	DIODE DA204U
D701	8-719-820-41	s	DIODE 1SS302
D702	8-719-820-41	s	DIODE 1SS302
D703	8-719-820-41	s	DIODE 1SS302
D704	8-719-820-41	s	DIODE 1SS302
D705	8-719-820-41	s	DIODE 1SS302
D706	8-719-820-41	s	DIODE 1SS302
D707	8-719-820-41	s	DIODE 1SS302
D708	8-719-056-65	s	DIODE 1SS372-TE85L
F1 ⚠	1-576-270-11	s	FUSE CHIP 4A/125V (6125)
FB1	1-469-379-11	s	FERRITE, EMI (SMD)
FB2	1-469-379-11	s	FERRITE, EMI (SMD)
FL1	1-239-896-12	s	FILTER, EMI (SMD)
FL2	1-239-896-12	s	FILTER, EMI (SMD)
FL3	1-239-896-12	s	FILTER, EMI (SMD)
FL4	1-239-896-12	s	FILTER, EMI (SMD)
FL5	1-239-896-12	s	FILTER, EMI (SMD)
FL6	1-239-896-12	s	FILTER, EMI (SMD)
FL7	1-239-896-12	s	FILTER, EMI (SMD)
FL8	1-239-896-12	s	FILTER, EMI (SMD)
FL9	1-239-896-12	s	FILTER, EMI (SMD)
FL10	1-239-896-12	s	FILTER, EMI (SMD)
FL11	1-239-896-12	s	FILTER, EMI (SMD)
FL12	1-239-896-12	s	FILTER, EMI (SMD)
FL13	1-239-896-12	s	FILTER, EMI (SMD)
FL14	1-239-896-12	s	FILTER, EMI (SMD)
FL15	1-239-896-12	s	FILTER, EMI (SMD)
FL16	1-239-896-12	s	FILTER, EMI (SMD)
FL17	1-239-896-12	s	FILTER, EMI (SMD)
FL18	1-239-896-12	s	FILTER, EMI (SMD)
FL19	1-239-896-12	s	FILTER, EMI (SMD)
FL20	1-239-896-12	s	FILTER, EMI (SMD)
FL21	1-239-896-12	s	FILTER, EMI (SMD)
FL22	1-239-896-12	s	FILTER, EMI (SMD)
FL23	1-239-896-12	s	FILTER, EMI (SMD)
FL24	1-239-896-12	s	FILTER, EMI (SMD)
FL25	1-239-896-12	s	FILTER, EMI (SMD)
FL26	1-239-896-12	s	FILTER, EMI (SMD)
FL27	1-239-896-12	s	FILTER, EMI (SMD)
FL28	1-239-896-12	s	FILTER, EMI (SMD)
FL29	1-239-896-12	s	FILTER, EMI (SMD)
FL30	1-239-896-12	s	FILTER, EMI (SMD)
FL31	1-239-895-11	s	FILTER, EMI (SMD)
FL32	1-239-895-11	s	FILTER, EMI (SMD)
FL33	1-239-895-11	s	FILTER, EMI (SMD)
FL34	1-239-895-11	s	FILTER, EMI (SMD)
IC100	6-700-915-01	s	IC SN74AHCT04PWR
IC102	8-759-592-08	s	IC AD8056ARM-REEL7
IC302*M*D	8-759-592-08	s	IC AD8056ARM-REEL7
IC500	6-701-453-01	s	IC SN75207BNSR
IC600 *M	6-701-453-01	s	IC SN75207BNSR

(CP-371/B/D BOARD [SUFFIX 11] for RECORDER)

Ref. No. or Q'ty	Part No.	SP	Description
IC601	8-759-642-22	s	IC UPC29M05T-E2
IC602	8-759-539-89	s	IC LM2990SX-5.0
IC701	8-759-669-74	s	IC TL084CPWR-12
IC702	8-759-669-74	s	IC TL084CPWR-12
IC703	8-759-669-74	s	IC TL084CPWR-12
IC704	8-759-669-74	s	IC TL084CPWR-12
IC707	8-759-580-22	s	IC LB1721M-TR
IC708	8-759-580-22	s	IC LB1721M-TR
IC709	8-759-580-22	s	IC LB1721M-TR
IC710	8-759-580-22	s	IC LB1721M-TR
IC711	8-759-580-22	s	IC LB1721M-TR
IC712	8-759-549-01	s	IC SN74LV125APWR
IC713	8-759-491-50	s	IC TC74VHCT244AFT(EL)
IC714	8-759-523-84	s	IC TC74VHC14FT (EL)
IC715	8-759-523-84	s	IC TC74VHC14FT (EL)
IC716	8-759-468-72	s	IC AK6420AM (E2)
IC717	8-759-543-22	s	IC S-80843ALUP-EA7-T2
IC718	8-759-523-81	s	IC TC74VHC08FT(EL)
IC719	8-759-466-50	s	IC NJM78M12DLA(TE1)
IC721	8-759-466-51	s	IC NJM79M12DLA(TE1)
L1	1-416-511-11	s	COIL, CHOKE 47.0UH
L2	1-416-511-11	s	COIL, CHOKE 47.0UH
L500	1-412-279-31	s	CHIP INDUCTOR 270UH (3225)
L501	1-410-378-11	s	INDUCTOR,CHIP 5.6UH (3225)
L502	1-412-279-31	s	CHIP INDUCTOR 270UH (3225)
L503	1-410-378-11	s	INDUCTOR,CHIP 5.6UH (3225)
L600 *M	1-412-279-31	s	CHIP INDUCTOR 270UH (3225)
L601 *M	1-412-279-31	s	CHIP INDUCTOR 270UH (3225)
L602 *M	1-410-378-11	s	INDUCTOR,CHIP 5.6UH (3225)
L603 *M	1-410-378-11	s	INDUCTOR,CHIP 5.6UH (3225)
PS1 ⚠	1-576-259-11	s	LINK,IC 0.6A (3225)
PS702 ⚠	1-576-259-11	s	LINK,IC 0.6A (3225)
R100	1-218-692-11	s	RESISTOR,CHIP 1.0K 1/16W(1608)
R101	1-218-690-11	s	RESISTOR,CHIP 820 1/16W (1608)
R102	1-218-692-11	s	RESISTOR,CHIP 1.0K 1/16W(1608)
R103	1-218-689-11	s	RESISTOR CHIP 750 1/16W (1608)
R105	1-218-665-11	s	RESISTOR,CHIP 75 1/16W (1608)
R106	1-216-864-11	s	CONDUCTOR, CHIP (1608)
R200	1-218-692-11	s	RESISTOR,CHIP 1.0K 1/16W(1608)
R201	1-218-690-11	s	RESISTOR,CHIP 820 1/16W (1608)
R202	1-218-692-11	s	RESISTOR,CHIP 1.0K 1/16W(1608)
R203	1-218-689-11	s	RESISTOR CHIP 750 1/16W (1608)
R205	1-218-665-11	s	RESISTOR,CHIP 75 1/16W (1608)
R206	1-216-864-11	s	CONDUCTOR, CHIP (1608)
R300	1-218-692-11	s	RESISTOR,CHIP 1.0K 1/16W(1608)
R301*M*D	1-218-690-11	s	RESISTOR,CHIP 820 1/16W (1608)
R302*M*D	1-218-692-11	s	RESISTOR,CHIP 1.0K 1/16W(1608)
R303*M*D	1-218-689-11	s	RESISTOR CHIP 750 1/16W (1608)
R305*M*D	1-218-665-11	s	RESISTOR,CHIP 75 1/16W (1608)
R306*M*D	1-216-864-11	s	CONDUCTOR, CHIP (1608)
R400	1-218-692-11	s	RESISTOR,CHIP 1.0K 1/16W(1608)
R401*M*D	1-218-690-11	s	RESISTOR,CHIP 820 1/16W (1608)
R402*M*D	1-218-692-11	s	RESISTOR,CHIP 1.0K 1/16W(1608)
R403*M*D	1-218-689-11	s	RESISTOR CHIP 750 1/16W (1608)
R405*M*D	1-218-665-11	s	RESISTOR,CHIP 75 1/16W (1608)
R406*M*D	1-216-864-11	s	CONDUCTOR, CHIP (1608)
R500	1-218-674-11	s	RESISTOR CHIP 180 1/16W (1608)
R501	1-218-668-11	s	RESISTOR,CHIP 100 1/16W (1608)

(CP-371/B/D BOARD [SUFFIX 11] for RECORDER)

Ref. No. or Q'ty	Part No.	SP	Description
R502	1-218-665-11	s	RESISTOR,CHIP 75 1/16W (1608)
R503	1-218-662-11	s	RESISTOR,CHIP 56 1/16W (1608)
R504	1-218-655-91	s	RESISTOR,CHIP 30 1/16W(1608)
R505	1-218-665-11	s	RESISTOR,CHIP 75 1/16W (1608)
R506	1-218-674-11	s	RESISTOR CHIP 180 1/16W (1608)
R507	1-218-668-11	s	RESISTOR,CHIP 100 1/16W (1608)
R508	1-218-665-11	s	RESISTOR,CHIP 75 1/16W (1608)
R509	1-218-662-11	s	RESISTOR,CHIP 56 1/16W (1608)
R510	1-218-655-91	s	RESISTOR,CHIP 30 1/16W(1608)
R511	1-218-665-11	s	RESISTOR,CHIP 75 1/16W (1608)
R514	1-218-692-11	s	RESISTOR,CHIP 1.0K 1/16W(1608)
R515	1-218-692-11	s	RESISTOR,CHIP 1.0K 1/16W(1608)
R516	1-218-652-11	s	RESISTOR,CHIP 22 1/16W (1608)
R517	1-218-652-11	s	RESISTOR,CHIP 22 1/16W (1608)
R600 *M	1-218-674-11	s	RESISTOR CHIP 180 1/16W (1608)
R601 *M	1-218-668-11	s	RESISTOR,CHIP 100 1/16W (1608)
R602 *M	1-218-665-11	s	RESISTOR,CHIP 75 1/16W (1608)
R603 *M	1-218-662-11	s	RESISTOR,CHIP 56 1/16W (1608)
R604 *M	1-218-655-91	s	RESISTOR,CHIP 30 1/16W(1608)
R605 *M	1-218-665-11	s	RESISTOR,CHIP 75 1/16W (1608)
R606 *M	1-218-674-11	s	RESISTOR CHIP 180 1/16W (1608)
R607 *M	1-218-668-11	s	RESISTOR,CHIP 100 1/16W (1608)
R608 *M	1-218-665-11	s	RESISTOR,CHIP 75 1/16W (1608)
R609 *M	1-218-662-11	s	RESISTOR,CHIP 56 1/16W (1608)
R610 *M	1-218-655-91	s	RESISTOR,CHIP 30 1/16W(1608)
R611 *M	1-218-665-11	s	RESISTOR,CHIP 75 1/16W (1608)
R614 *M	1-218-692-11	s	RESISTOR,CHIP 1.0K 1/16W(1608)
R615 *M	1-218-692-11	s	RESISTOR,CHIP 1.0K 1/16W(1608)
R616 *M	1-218-652-11	s	RESISTOR,CHIP 22 1/16W (1608)
R617 *M	1-218-652-11	s	RESISTOR,CHIP 22 1/16W (1608)
R701	1-218-740-11	s	RESISTOR,CHIP 100K 1/16W(1608)
R702	1-218-732-11	s	RESISTOR,CHIP 47K 1/16W(1608)
R703	1-218-732-11	s	RESISTOR,CHIP 47K 1/16W(1608)
R704	1-218-740-11	s	RESISTOR,CHIP 100K 1/16W(1608)
R705	1-218-732-11	s	RESISTOR,CHIP 47K 1/16W(1608)
R706	1-218-732-11	s	RESISTOR,CHIP 47K 1/16W(1608)
R707	1-218-740-11	s	RESISTOR,CHIP 100K 1/16W(1608)
R708	1-218-732-11	s	RESISTOR,CHIP 47K 1/16W(1608)
R709	1-218-732-11	s	RESISTOR,CHIP 47K 1/16W(1608)
R710	1-218-740-11	s	RESISTOR,CHIP 100K 1/16W(1608)
R711	1-218-732-11	s	RESISTOR,CHIP 47K 1/16W(1608)
R712	1-218-732-11	s	RESISTOR,CHIP 47K 1/16W(1608)
R713	1-218-740-11	s	RESISTOR,CHIP 100K 1/16W(1608)
R714	1-218-732-11	s	RESISTOR,CHIP 47K 1/16W(1608)
R715	1-218-732-11	s	RESISTOR,CHIP 47K 1/16W(1608)
R716	1-218-740-11	s	RESISTOR,CHIP 100K 1/16W(1608)
R717	1-218-732-11	s	RESISTOR,CHIP 47K 1/16W(1608)
R718	1-218-732-11	s	RESISTOR,CHIP 47K 1/16W(1608)
R719	1-218-740-11	s	RESISTOR,CHIP 100K 1/16W(1608)
R720	1-218-732-11	s	RESISTOR,CHIP 47K 1/16W(1608)
R721	1-218-732-11	s	RESISTOR,CHIP 47K 1/16W(1608)
R722	1-218-732-11	s	RESISTOR,CHIP 47K 1/16W(1608)
R723	1-218-668-11	s	RESISTOR,CHIP 100 1/16W (1608)
R724	1-218-732-11	s	RESISTOR,CHIP 47K 1/16W(1608)
R725	1-218-668-11	s	RESISTOR,CHIP 100 1/16W (1608)
R762	1-218-732-11	s	RESISTOR,CHIP 47K 1/16W(1608)
R765	1-218-740-11	s	RESISTOR,CHIP 100K 1/16W(1608)
R766	1-218-732-11	s	RESISTOR,CHIP 47K 1/16W(1608)
R767	1-218-708-11	s	RESISTOR,CHIP 4.7K 1/16W(1608)

(CP-371/B/D BOARD [SUFFIX 11] for RECORDER)

Ref. No. or Q'ty	Part No.	SP	Description
R768	1-218-708-11	s	RESISTOR,CHIP 4.7K 1/16W(1608)
R769	1-218-708-11	s	RESISTOR,CHIP 4.7K 1/16W(1608)
R770	1-218-708-11	s	RESISTOR,CHIP 4.7K 1/16W(1608)
R771	1-218-708-11	s	RESISTOR,CHIP 4.7K 1/16W(1608)
R772	1-218-708-11	s	RESISTOR,CHIP 4.7K 1/16W(1608)
R773	1-218-708-11	s	RESISTOR,CHIP 4.7K 1/16W(1608)
R774	1-218-708-11	s	RESISTOR,CHIP 4.7K 1/16W(1608)
R775	1-218-708-11	s	RESISTOR,CHIP 4.7K 1/16W(1608)
R776	1-218-708-11	s	RESISTOR,CHIP 4.7K 1/16W(1608)
R783	1-218-732-11	s	RESISTOR,CHIP 47K 1/16W(1608)
R784	1-218-732-11	s	RESISTOR,CHIP 47K 1/16W(1608)
R789	1-218-668-11	s	RESISTOR,CHIP 100 1/16W (1608)
R790	1-218-732-11	s	RESISTOR,CHIP 47K 1/16W(1608)
RB701	1-239-389-11	s	RESISTOR,NETWORK 47K (1608)
RB702	1-233-270-11	o	RESISTOR, NETWORK (8 GANG) 10K
RB703	1-233-270-11	o	RESISTOR, NETWORK (8 GANG) 10K
RB704	1-233-270-11	o	RESISTOR, NETWORK (8 GANG) 10K
RB705	1-233-270-11	o	RESISTOR, NETWORK (8 GANG) 10K
RB706	1-233-270-11	o	RESISTOR, NETWORK (8 GANG) 10K
RB707	1-239-412-11	s	NETWORK, RESISTOR 100 (1608)
RB708	1-233-665-11	s	NETWORK, RES (8 GANG) 47K
X701	1-767-922-11	s	VIBRATOR, CERAMIC (16MHZ)

CP-371/B/D BOARD [SUFFIX 12-] for RECORDER

---

*B: [Lot No. 361 -] HDW-2000
[Lot No. 462 -] HDW-S2000/P
[Lot No. 434 -] DVW-2000/P
*D: [Lot No. 4C2 -] HDW-D2000
[Lot No. 361 -] HDW-M2000/P
[Lot No. 434 -] DVW-M2000/P
*M: [Lot No. 361 -] MSW-2000, M2000/P, A2000/P
[Lot No. 495 -] MSW-M2000E/P

Ref. No. or Q'ty	Part No.	SP	Description
1pc	*B A-8329-646-A	s	MOUNTED CIRCUIT BOARD, CP-371B
	*D A-8329-650-A	s	MOUNTED CIRCUIT BOARD, CP-371D
	*M A-8329-128-A	s	MOUNTED CIRCUIT BOARD, CP-371
2pcs	3-673-910-00	o	SCREW (STEEL)
C1	1-126-396-11	s	CAPACITOR,ELECT 47MF/16V(CHIP)
C2	1-126-396-11	s	CAPACITOR,ELECT 47MF/16V(CHIP)
C3	1-131-992-11	s	CAP, CERAMIC 100000PF F 1608
C4	1-131-992-11	s	CAP, CERAMIC 100000PF F 1608
C5	1-126-394-11	s	CAPACITOR,ELECT 10MF/16V(CHIP)
C6	1-126-394-11	s	CAPACITOR,ELECT 10MF/16V(CHIP)
C7	1-131-992-11	s	CAP, CERAMIC 100000PF F 1608
C8	1-131-992-11	s	CAP, CERAMIC 100000PF F 1608
C9	1-126-396-11	s	CAPACITOR,ELECT 47MF/16V(CHIP)
C10	1-131-992-11	s	CAP, CERAMIC 100000PF F 1608
C11	1-126-396-11	s	CAPACITOR,ELECT 47MF/16V(CHIP)
C12	1-131-992-11	s	CAP, CERAMIC 100000PF F 1608
C100	1-131-992-11	s	CAP, CERAMIC 100000PF F 1608
C102	1-162-910-11	s	CAPACITOR,CERAMIC 5PF/50V 1608
C104	1-126-396-11	s	CAPACITOR,ELECT 47MF/16V(CHIP)
C106	1-162-921-11	s	CAPACITOR,CERAMIC 33PF/50V CH
C202	1-162-910-11	s	CAPACITOR,CERAMIC 5PF/50V 1608
C203	1-131-992-11	s	CAP, CERAMIC 100000PF F 1608
C204	1-126-396-11	s	CAPACITOR,ELECT 47MF/16V(CHIP)
C205	1-131-992-11	s	CAP, CERAMIC 100000PF F 1608
C206	1-162-921-11	s	CAPACITOR,CERAMIC 33PF/50V CH
C301*M*D	1-162-919-11	s	CAPACITOR,CERAMIC 22PF/50V CH
C302*M*D	1-162-910-11	s	CAPACITOR,CERAMIC 5PF/50V 1608
C304*M*D	1-126-396-11	s	CAPACITOR,ELECT 47MF/16V(CHIP)
C306*M*D	1-162-916-11	s	CAPACITOR,CERAMIC 12PF/50V CH
C401*M*D	1-162-919-11	s	CAPACITOR,CERAMIC 22PF/50V CH
C402*M*D	1-162-910-11	s	CAPACITOR,CERAMIC 5PF/50V 1608
C403*M*D	1-131-992-11	s	CAP, CERAMIC 100000PF F 1608
C404*M*D	1-126-396-11	s	CAPACITOR,ELECT 47MF/16V(CHIP)
C405*M*D	1-131-992-11	s	CAP, CERAMIC 100000PF F 1608
C406*M*D	1-162-916-11	s	CAPACITOR,CERAMIC 12PF/50V CH
C500	1-115-416-11	s	CAPACITOR,CERAMIC 1000PF/25V
C501	1-165-176-11	s	CAPACITOR,CERAMIC 47000PF/16V
C502	1-115-416-11	s	CAPACITOR,CERAMIC 1000PF/25V
C503	1-165-176-11	s	CAPACITOR,CERAMIC 47000PF/16V
C504	1-131-992-11	s	CAP, CERAMIC 100000PF F 1608
C505	1-131-992-11	s	CAP, CERAMIC 100000PF F 1608
C600 *M	1-115-416-11	s	CAPACITOR,CERAMIC 1000PF/25V
C601 *M	1-165-176-11	s	CAPACITOR,CERAMIC 47000PF/16V
C602 *M	1-115-416-11	s	CAPACITOR,CERAMIC 1000PF/25V
C603 *M	1-165-176-11	s	CAPACITOR,CERAMIC 47000PF/16V
C604 *M	1-131-992-11	s	CAP, CERAMIC 100000PF F 1608
C605 *M	1-131-992-11	s	CAP, CERAMIC 100000PF F 1608
C701	1-162-927-11	s	CAPACITOR,CERAMIC 100PF/50V CH
C702	1-131-992-11	s	CAP, CERAMIC 100000PF F 1608
C703	1-131-992-11	s	CAP, CERAMIC 100000PF F 1608
C704	1-162-927-11	s	CAPACITOR,CERAMIC 100PF/50V CH
C705	1-162-927-11	s	CAPACITOR,CERAMIC 100PF/50V CH
C706	1-131-992-11	s	CAP, CERAMIC 100000PF F 1608

(CP-371/B/D BOARD [SUFFIX 12-] for RECORDER)

Ref. No. or Q'ty	Part No.	SP	Description
C707	1-131-992-11	s	CAP, CERAMIC 100000PF F 1608
C708	1-162-927-11	s	CAPACITOR,CERAMIC 100PF/50V CH
C709	1-162-927-11	s	CAPACITOR,CERAMIC 100PF/50V CH
C710	1-131-992-11	s	CAP, CERAMIC 100000PF F 1608
C711	1-131-992-11	s	CAP, CERAMIC 100000PF F 1608
C712	1-162-927-11	s	CAPACITOR,CERAMIC 100PF/50V CH
C713	1-162-927-11	s	CAPACITOR,CERAMIC 100PF/50V CH
C714	1-131-992-11	s	CAP, CERAMIC 100000PF F 1608
C715	1-131-992-11	s	CAP, CERAMIC 100000PF F 1608
C716	1-162-927-11	s	CAPACITOR,CERAMIC 100PF/50V CH
C717	1-162-927-11	s	CAPACITOR,CERAMIC 100PF/50V CH
C718	1-162-927-11	s	CAPACITOR,CERAMIC 100PF/50V CH
C719	1-162-927-11	s	CAPACITOR,CERAMIC 100PF/50V CH
C720	1-162-927-11	s	CAPACITOR,CERAMIC 100PF/50V CH
C721	1-162-927-11	s	CAPACITOR,CERAMIC 100PF/50V CH
C722	1-162-927-11	s	CAPACITOR,CERAMIC 100PF/50V CH
C724	1-126-394-11	s	CAPACITOR,ELECT 10MF/16V(CHIP)
C725	1-131-992-11	s	CAP, CERAMIC 100000PF F 1608
C726	1-131-992-11	s	CAP, CERAMIC 100000PF F 1608
C727	1-131-992-11	s	CAP, CERAMIC 100000PF F 1608
C730	1-126-394-11	s	CAPACITOR,ELECT 10MF/16V(CHIP)
C731	1-131-992-11	s	CAP, CERAMIC 100000PF F 1608
C732	1-131-992-11	s	CAP, CERAMIC 100000PF F 1608
C733	1-162-927-11	s	CAPACITOR,CERAMIC 100PF/50V CH
C734	1-162-927-11	s	CAPACITOR,CERAMIC 100PF/50V CH
C735	1-162-927-11	s	CAPACITOR,CERAMIC 100PF/50V CH
C736	1-162-927-11	s	CAPACITOR,CERAMIC 100PF/50V CH
C737	1-162-927-11	s	CAPACITOR,CERAMIC 100PF/50V CH
C738	1-162-927-11	s	CAPACITOR,CERAMIC 100PF/50V CH
C739	1-162-927-11	s	CAPACITOR,CERAMIC 100PF/50V CH
C740	1-162-927-11	s	CAPACITOR,CERAMIC 100PF/50V CH
C741	1-162-927-11	s	CAPACITOR,CERAMIC 100PF/50V CH
C742	1-162-927-11	s	CAPACITOR,CERAMIC 100PF/50V CH
C747	1-127-692-11	s	CAP, CHIP CERAMIC 10MF B 3216
C748	1-127-692-11	s	CAP, CHIP CERAMIC 10MF B 3216
C750	1-162-927-11	s	CAPACITOR,CERAMIC 100PF/50V CH
C751	1-162-927-11	s	CAPACITOR,CERAMIC 100PF/50V CH
C752	1-162-927-11	s	CAPACITOR,CERAMIC 100PF/50V CH
C753	1-131-992-11	s	CAP, CERAMIC 100000PF F 1608
C754	1-131-992-11	s	CAP, CERAMIC 100000PF F 1608
C755	1-131-992-11	s	CAP, CERAMIC 100000PF F 1608
C756	1-131-992-11	s	CAP, CERAMIC 100000PF F 1608
C757	1-126-399-11	s	CAPACITOR ELECT 10MF/35V(CHIP)
C758	1-126-399-11	s	CAPACITOR ELECT 10MF/35V(CHIP)
C759	1-131-992-11	s	CAP, CERAMIC 100000PF F 1608
C760	1-131-992-11	s	CAP, CERAMIC 100000PF F 1608
C761	1-131-992-11	s	CAP, CERAMIC 100000PF F 1608
C762	1-131-992-11	s	CAP, CERAMIC 100000PF F 1608
C763	1-126-396-11	s	CAPACITOR,ELECT 47MF/16V(CHIP)
C764	1-126-396-11	s	CAPACITOR,ELECT 47MF/16V(CHIP)
C765	1-126-396-11	s	CAPACITOR,ELECT 47MF/16V(CHIP)
C766	1-131-992-11	s	CAP, CERAMIC 100000PF F 1608
CN1 *M	1-794-428-11	s	CONNECTOR ASSY, BNC
*B	1-815-086-12	s	CONNECTOR ASSY, BNC
*D	1-815-306-12	s	CONNECTOR ASSY, BNC
CN10	1-766-727-11	o	SOCKET, D-SUB CONNECTOR (50P)
CN11	1-568-676-11	o	CONNECTOR,D-SUB 9P
CN12	1-568-676-11	o	CONNECTOR,D-SUB 9P
CN13	1-779-759-11	o	CONNECTOR, D-SUB 9P

(CP-371/B/D BOARD [SUFFIX 12-] for RECORDER)

Ref. No. or Q'ty	Part No.	SP	Description
CN14	1-794-229-11	o	CONNECTOR, ROUND TYPE (RECEPTA
CN15	1-568-674-11	o	CONNECTOR,D-SUB 15P
CN16	1-568-676-11	o	CONNECTOR,D-SUB 9P
CN710	1-695-223-11	s	PIN, CONNECTOR (SMD) 10P
D1	8-719-056-65	s	DIODE 1SS372-TE85L
D500	8-719-941-23	s	DIODE DA204U
D501	8-719-941-23	s	DIODE DA204U
D600 *M	8-719-941-23	s	DIODE DA204U
D601 *M	8-719-941-23	s	DIODE DA204U
D701	8-719-820-41	s	DIODE 1SS302
D702	8-719-820-41	s	DIODE 1SS302
D703	8-719-820-41	s	DIODE 1SS302
D704	8-719-820-41	s	DIODE 1SS302
D705	8-719-820-41	s	DIODE 1SS302
D706	8-719-820-41	s	DIODE 1SS302
D707	8-719-820-41	s	DIODE 1SS302
D708	8-719-056-65	s	DIODE 1SS372-TE85L
D709	8-719-056-65	s	DIODE 1SS372-TE85L
F1	⚠ 1-576-270-11	s	FUSE CHIP 4A/125V (6125)
FB1	1-469-379-11	s	FERRITE, EMI (SMD)
FB2	1-469-379-11	s	FERRITE, EMI (SMD)
FB3	1-469-379-11	s	FERRITE, EMI (SMD)
FB4	1-469-379-11	s	FERRITE, EMI (SMD)
FL1	1-239-896-12	s	FILTER, EMI (SMD)
FL2	1-239-896-12	s	FILTER, EMI (SMD)
FL3	1-239-896-12	s	FILTER, EMI (SMD)
FL4	1-239-896-12	s	FILTER, EMI (SMD)
FL5	1-239-896-12	s	FILTER, EMI (SMD)
FL6	1-239-896-12	s	FILTER, EMI (SMD)
FL7	1-239-896-12	s	FILTER, EMI (SMD)
FL8	1-239-896-12	s	FILTER, EMI (SMD)
FL9	1-239-896-12	s	FILTER, EMI (SMD)
FL10	1-239-896-12	s	FILTER, EMI (SMD)
FL11	1-239-896-12	s	FILTER, EMI (SMD)
FL12	1-239-896-12	s	FILTER, EMI (SMD)
FL13	1-239-896-12	s	FILTER, EMI (SMD)
FL14	1-239-896-12	s	FILTER, EMI (SMD)
FL15	1-239-896-12	s	FILTER, EMI (SMD)
FL16	1-239-896-12	s	FILTER, EMI (SMD)
FL17	1-239-896-12	s	FILTER, EMI (SMD)
FL18	1-239-896-12	s	FILTER, EMI (SMD)
FL19	1-239-896-12	s	FILTER, EMI (SMD)
FL20	1-239-896-12	s	FILTER, EMI (SMD)
FL21	1-239-896-12	s	FILTER, EMI (SMD)
FL22	1-239-896-12	s	FILTER, EMI (SMD)
FL23	1-239-896-12	s	FILTER, EMI (SMD)
FL25	1-239-896-12	s	FILTER, EMI (SMD)
FL27	1-239-896-12	s	FILTER, EMI (SMD)
FL28	1-239-896-12	s	FILTER, EMI (SMD)
FL29	1-239-896-12	s	FILTER, EMI (SMD)
FL30	1-239-896-12	s	FILTER, EMI (SMD)
FL31	1-239-895-11	s	FILTER, EMI (SMD)
FL32	1-239-895-11	s	FILTER, EMI (SMD)
FL33	1-239-895-11	s	FILTER, EMI (SMD)
FL34	1-239-895-11	s	FILTER, EMI (SMD)
IC100	6-700-915-01	s	IC SN74AHCT04PWR
IC102	8-759-592-08	s	IC AD8056ARMZ-REEL7

(CP-371/B/D BOARD [SUFFIX 12-] for RECORDER)

Ref. No. or Q'ty	Part No.	SP	Description
IC302*M*D	8-759-592-08	s	IC AD8056ARMZ-REEL7
IC500	6-701-453-01	s	IC SN75207BNSR
IC600 *M	6-701-453-01	s	IC SN75207BNSR
IC601	8-759-642-22	s	IC UPC29M05T-E2
IC602	8-759-539-89	s	IC LM2990SX-5.0
IC701	8-759-669-74	s	IC TL084CPWR-12
IC702	8-759-669-74	s	IC TL084CPWR-12
IC703	8-759-669-74	s	IC TL084CPWR-12
IC704	8-759-669-74	s	IC TL084CPWR-12
IC707	8-759-580-22	s	IC LB1721M-TR
IC708	8-759-580-22	s	IC LB1721M-TR
IC709	8-759-580-22	s	IC LB1721M-TR
IC710	8-759-580-22	s	IC LB1721M-TR
IC711	8-759-580-22	s	IC LB1721M-TR
IC712	8-759-549-01	s	IC SN74LV125APWR
IC713	8-759-491-50	s	IC TC74VHCT244AFT(EL)
IC714	8-759-523-84	s	IC TC74VHC14FT (EL)
IC715	8-759-523-84	s	IC TC74VHC14FT (EL)
IC716	8-759-468-72	s	IC AK6420AM (E2)
IC717	6-704-164-01	s	IC S-80845CLUA-B66T2G
IC718	8-759-523-81	s	IC TC74VHC08FT(EL)
IC719	6-702-295-01	s	IC NJM78M12DL1A-TE1
IC721	6-702-297-01	s	IC NJM79M12DL1A-TE1
IC722	6-702-295-01	s	IC NJM78M12DL1A-TE1
L1	1-416-511-11	s	COIL, CHOKE 47.0UH
L2	1-416-511-11	s	COIL, CHOKE 47.0UH
L501	1-410-378-11	s	INDUCTOR,CHIP 5.6UH (3225)
L503	1-410-378-11	s	INDUCTOR,CHIP 5.6UH (3225)
L602 *M	1-410-378-11	s	INDUCTOR,CHIP 5.6UH (3225)
L603 *M	1-410-378-11	s	INDUCTOR,CHIP 5.6UH (3225)
PS1 ⚠	1-576-259-11	s	LINK,IC 0.6A (3225)
PS702 ⚠	1-576-259-11	s	LINK,IC 0.6A (3225)
R100	1-218-847-11	s	RESISTOR, CHIP 1K 1/10W (1608)
R101	1-218-845-11	s	RESISTOR,CHIP 820 1/10W (1608)
R102	1-218-847-11	s	RESISTOR, CHIP 1K 1/10W (1608)
R103	1-218-844-11	s	RESISTOR,CHIP 750 1/10W (1608)
R105	1-211-990-11	s	RESISTOR,CHIP 75 1/10W (1608)
R106	1-216-864-11	s	CONDUCTOR, CHIP (1608)
R200	1-218-847-11	s	RESISTOR, CHIP 1K 1/10W (1608)
R201	1-218-845-11	s	RESISTOR,CHIP 820 1/10W (1608)
R202	1-218-847-11	s	RESISTOR, CHIP 1K 1/10W (1608)
R203	1-218-844-11	s	RESISTOR,CHIP 750 1/10W (1608)
R205	1-211-990-11	s	RESISTOR,CHIP 75 1/10W (1608)
R206	1-216-864-11	s	CONDUCTOR, CHIP (1608)
R300	1-218-847-11	s	RESISTOR, CHIP 1K 1/10W (1608)
R301*M*D	1-218-845-11	s	RESISTOR,CHIP 820 1/10W (1608)
R302*M*D	1-218-847-11	s	RESISTOR, CHIP 1K 1/10W (1608)
R303*M*D	1-218-844-11	s	RESISTOR,CHIP 750 1/10W (1608)
R305*M*D	1-211-990-11	s	RESISTOR,CHIP 75 1/10W (1608)
R306*M*D	1-216-864-11	s	CONDUCTOR, CHIP (1608)
R400	1-218-847-11	s	RESISTOR, CHIP 1K 1/10W (1608)
R401*M*D	1-218-845-11	s	RESISTOR,CHIP 820 1/10W (1608)
R402*M*D	1-218-847-11	s	RESISTOR, CHIP 1K 1/10W (1608)
R403*M*D	1-218-844-11	s	RESISTOR,CHIP 750 1/10W (1608)
R405*M*D	1-211-990-11	s	RESISTOR,CHIP 75 1/10W (1608)
R406*M*D	1-216-864-11	s	CONDUCTOR, CHIP (1608)
R500	1-218-829-11	s	RESISTOR,CHIP 180 1/10W (1608)

(CP-371/B/D BOARD [SUFFIX 12-] for RECORDER)

Ref. No. or Q'ty	Part No.	SP	Description
R501	1-218-823-11	s	RESISTOR,CHIP 100 1/10W (1608)
R502	1-211-990-11	s	RESISTOR,CHIP 75 1/10W (1608)
R503	1-211-987-11	s	RESISTOR,CHIP 56 1/10W (1608)
R504	1-211-980-11	s	RESISTOR,CHIP 30 1/10W(1608)
R505	1-211-990-11	s	RESISTOR,CHIP 75 1/10W (1608)
R506	1-218-829-11	s	RESISTOR,CHIP 180 1/10W (1608)
R507	1-218-823-11	s	RESISTOR,CHIP 100 1/10W (1608)
R508	1-211-990-11	s	RESISTOR,CHIP 75 1/10W (1608)
R509	1-211-987-11	s	RESISTOR,CHIP 56 1/10W (1608)
R510	1-211-980-11	s	RESISTOR,CHIP 30 1/10W(1608)
R511	1-211-990-11	s	RESISTOR,CHIP 75 1/10W (1608)
R514	1-218-847-11	s	RESISTOR, CHIP 1K 1/10W (1608)
R515	1-218-847-11	s	RESISTOR, CHIP 1K 1/10W (1608)
R516	1-211-977-11	s	RESISTOR,CHIP 22 1/10W (1608)
R517	1-211-977-11	s	RESISTOR,CHIP 22 1/10W (1608)
R600 *M	1-218-829-11	s	RESISTOR,CHIP 180 1/10W (1608)
R601 *M	1-218-823-11	s	RESISTOR,CHIP 100 1/10W (1608)
R602 *M	1-211-990-11	s	RESISTOR,CHIP 75 1/10W (1608)
R603 *M	1-211-987-11	s	RESISTOR,CHIP 56 1/10W (1608)
R604 *M	1-211-980-11	s	RESISTOR,CHIP 30 1/10W(1608)
R605 *M	1-211-990-11	s	RESISTOR,CHIP 75 1/10W (1608)
R606 *M	1-218-829-11	s	RESISTOR,CHIP 180 1/10W (1608)
R607 *M	1-218-823-11	s	RESISTOR,CHIP 100 1/10W (1608)
R608 *M	1-211-990-11	s	RESISTOR,CHIP 75 1/10W (1608)
R609 *M	1-211-987-11	s	RESISTOR,CHIP 56 1/10W (1608)
R610 *M	1-211-980-11	s	RESISTOR,CHIP 30 1/10W(1608)
R611 *M	1-211-990-11	s	RESISTOR,CHIP 75 1/10W (1608)
R614 *M	1-218-847-11	s	RESISTOR, CHIP 1K 1/10W (1608)
R615 *M	1-218-847-11	s	RESISTOR, CHIP 1K 1/10W (1608)
R616 *M	1-211-977-11	s	RESISTOR,CHIP 22 1/10W (1608)
R617 *M	1-211-977-11	s	RESISTOR,CHIP 22 1/10W (1608)
R701	1-218-895-11	s	RESISTOR,CHIP 100K 1/10W(1608)
R702	1-218-887-11	s	RESISTOR,CHIP 47K 1/10W (1608)
R703	1-218-887-11	s	RESISTOR,CHIP 47K 1/10W (1608)
R704	1-218-895-11	s	RESISTOR,CHIP 100K 1/10W(1608)
R705	1-218-887-11	s	RESISTOR,CHIP 47K 1/10W (1608)
R706	1-218-887-11	s	RESISTOR,CHIP 47K 1/10W (1608)
R707	1-218-895-11	s	RESISTOR,CHIP 100K 1/10W(1608)
R708	1-218-887-11	s	RESISTOR,CHIP 47K 1/10W (1608)
R709	1-218-887-11	s	RESISTOR,CHIP 47K 1/10W (1608)
R710	1-218-895-11	s	RESISTOR,CHIP 100K 1/10W(1608)
R711	1-218-887-11	s	RESISTOR,CHIP 47K 1/10W (1608)
R712	1-218-887-11	s	RESISTOR,CHIP 47K 1/10W (1608)
R713	1-218-895-11	s	RESISTOR,CHIP 100K 1/10W(1608)
R714	1-218-887-11	s	RESISTOR,CHIP 47K 1/10W (1608)
R715	1-218-887-11	s	RESISTOR,CHIP 47K 1/10W (1608)
R716	1-218-895-11	s	RESISTOR,CHIP 100K 1/10W(1608)
R717	1-218-887-11	s	RESISTOR,CHIP 47K 1/10W (1608)
R718	1-218-887-11	s	RESISTOR,CHIP 47K 1/10W (1608)
R719	1-218-895-11	s	RESISTOR,CHIP 100K 1/10W(1608)
R720	1-218-887-11	s	RESISTOR,CHIP 47K 1/10W (1608)
R721	1-218-887-11	s	RESISTOR,CHIP 47K 1/10W (1608)
R722	1-218-887-11	s	RESISTOR,CHIP 47K 1/10W (1608)
R723	1-218-823-11	s	RESISTOR,CHIP 100 1/10W (1608)
R724	1-218-887-11	s	RESISTOR,CHIP 47K 1/10W (1608)
R725	1-218-823-11	s	RESISTOR,CHIP 100 1/10W (1608)
R762	1-218-887-11	s	RESISTOR,CHIP 47K 1/10W (1608)
R765	1-218-895-11	s	RESISTOR,CHIP 100K 1/10W(1608)
R766	1-218-887-11	s	RESISTOR,CHIP 47K 1/10W (1608)

(CP-371/B/D BOARD [SUFFIX 12-] for RECORDER)

Ref. No. or Q'ty	Part No.	SP	Description
R767	1-218-863-11	s	RESISTOR,CHIP 4.7K 1/10W(1608)
R768	1-218-863-11	s	RESISTOR,CHIP 4.7K 1/10W(1608)
R769	1-218-863-11	s	RESISTOR,CHIP 4.7K 1/10W(1608)
R770	1-218-863-11	s	RESISTOR,CHIP 4.7K 1/10W(1608)
R771	1-218-863-11	s	RESISTOR,CHIP 4.7K 1/10W(1608)
R772	1-218-863-11	s	RESISTOR,CHIP 4.7K 1/10W(1608)
R773	1-218-863-11	s	RESISTOR,CHIP 4.7K 1/10W(1608)
R774	1-218-863-11	s	RESISTOR,CHIP 4.7K 1/10W(1608)
R775	1-218-863-11	s	RESISTOR,CHIP 4.7K 1/10W(1608)
R776	1-218-863-11	s	RESISTOR,CHIP 4.7K 1/10W(1608)
R783	1-218-887-11	s	RESISTOR,CHIP 47K 1/10W (1608)
R784	1-218-887-11	s	RESISTOR,CHIP 47K 1/10W (1608)
R789	1-218-823-11	s	RESISTOR,CHIP 100 1/10W (1608)
R790	1-218-887-11	s	RESISTOR,CHIP 47K 1/10W (1608)
RB701	1-233-578-11	s	RESISTOR,CHIP NETWORK 47K
RB702	1-233-270-11	s	RESISTOR, NETWORK (8 GANG) 10K
RB703	1-233-270-11	s	RESISTOR, NETWORK (8 GANG) 10K
RB704	1-233-270-11	s	RESISTOR, NETWORK (8 GANG) 10K
RB705	1-233-270-11	s	RESISTOR, NETWORK (8 GANG) 10K
RB706	1-233-270-11	s	RESISTOR, NETWORK (8 GANG) 10K
RB707	1-233-576-11	s	RESISTOR,CHIP NETWORK 100
RB708	1-233-665-11	s	NETWORK, RES (8 GANG) 47K
X701	1-767-922-11	s	VIBRATOR, CERAMIC (16MHZ)

CP-371A/C BOARD [SUFFIX 11] for PLAYER

---

*A: [Lot No. 261 - 355] HDW-M2100/P
MSW-M2100/P
*C: [Lot No. 261 - 355] HDW-A2100

Ref. No. or Q'ty	Part No.	SP	Description
1pc	*A A-8329-644-A	s	MOUNTED CIRCUIT BOARD, CP-371A
	*C A-8329-648-A	s	MOUNTED CIRCUIT BOARD, CP-371C
2pcs	3-673-910-00	o	SCREW (STEEL)
C1	1-126-396-11	s	CAPACITOR,ELECT 47MF/16V(CHIP)
C2	1-126-396-11	s	CAPACITOR,ELECT 47MF/16V(CHIP)
C3	1-164-156-11	s	CAPACITOR,CERAMIC 0.1MF/25V F
C4	1-164-156-11	s	CAPACITOR,CERAMIC 0.1MF/25V F
C5	1-126-394-11	s	CAPACITOR,ELECT 10MF/16V(CHIP)
C6	1-126-394-11	s	CAPACITOR,ELECT 10MF/16V(CHIP)
C7	1-164-156-11	s	CAPACITOR,CERAMIC 0.1MF/25V F
C8	1-164-156-11	s	CAPACITOR,CERAMIC 0.1MF/25V F
C9	1-126-396-11	s	CAPACITOR,ELECT 47MF/16V(CHIP)
C10	1-164-156-11	s	CAPACITOR,CERAMIC 0.1MF/25V F
C11	1-126-396-11	s	CAPACITOR,ELECT 47MF/16V(CHIP)
C12	1-164-156-11	s	CAPACITOR,CERAMIC 0.1MF/25V F
C100	1-164-156-11	s	CAPACITOR,CERAMIC 0.1MF/25V F
C102	1-162-910-11	s	CAPACITOR,CERAMIC 5PF/50V 1608
C104	1-126-396-11	s	CAPACITOR,ELECT 47MF/16V(CHIP)
C106	1-162-921-11	s	CAPACITOR,CERAMIC 33PF/50V CH
C202	1-162-910-11	s	CAPACITOR,CERAMIC 5PF/50V 1608
C203	1-164-156-11	s	CAPACITOR,CERAMIC 0.1MF/25V F
C204	1-126-396-11	s	CAPACITOR,ELECT 47MF/16V(CHIP)
C205	1-164-156-11	s	CAPACITOR,CERAMIC 0.1MF/25V F
C206	1-162-921-11	s	CAPACITOR,CERAMIC 33PF/50V CH
C301	*A 1-162-919-11	s	CAPACITOR,CERAMIC 22PF/50V CH
C302	*A 1-162-910-11	s	CAPACITOR,CERAMIC 5PF/50V 1608
C304	*A 1-126-396-11	s	CAPACITOR,ELECT 47MF/16V(CHIP)
C306	*A 1-162-916-11	s	CAPACITOR,CERAMIC 12PF/50V CH
C401	*A 1-162-919-11	s	CAPACITOR,CERAMIC 22PF/50V CH
C402	*A 1-162-910-11	s	CAPACITOR,CERAMIC 5PF/50V 1608
C403	*A 1-164-156-11	s	CAPACITOR,CERAMIC 0.1MF/25V F
C404	*A 1-126-396-11	s	CAPACITOR,ELECT 47MF/16V(CHIP)
C405	*A 1-164-156-11	s	CAPACITOR,CERAMIC 0.1MF/25V F
C406	*A 1-162-916-11	s	CAPACITOR,CERAMIC 12PF/50V CH
C701	1-162-927-11	s	CAPACITOR,CERAMIC 100PF/50V CH
C702	1-164-156-11	s	CAPACITOR,CERAMIC 0.1MF/25V F
C703	1-164-156-11	s	CAPACITOR,CERAMIC 0.1MF/25V F
C704	1-162-927-11	s	CAPACITOR,CERAMIC 100PF/50V CH
C705	1-162-927-11	s	CAPACITOR,CERAMIC 100PF/50V CH
C706	1-164-156-11	s	CAPACITOR,CERAMIC 0.1MF/25V F
C707	1-164-156-11	s	CAPACITOR,CERAMIC 0.1MF/25V F
C708	1-162-927-11	s	CAPACITOR,CERAMIC 100PF/50V CH
C709	1-162-927-11	s	CAPACITOR,CERAMIC 100PF/50V CH
C710	1-164-156-11	s	CAPACITOR,CERAMIC 0.1MF/25V F
C711	1-164-156-11	s	CAPACITOR,CERAMIC 0.1MF/25V F
C712	1-162-927-11	s	CAPACITOR,CERAMIC 100PF/50V CH
C713	1-162-927-11	s	CAPACITOR,CERAMIC 100PF/50V CH
C714	1-164-156-11	s	CAPACITOR,CERAMIC 0.1MF/25V F
C715	1-164-156-11	s	CAPACITOR,CERAMIC 0.1MF/25V F
C716	1-162-927-11	s	CAPACITOR,CERAMIC 100PF/50V CH
C717	1-162-927-11	s	CAPACITOR,CERAMIC 100PF/50V CH
C718	1-162-927-11	s	CAPACITOR,CERAMIC 100PF/50V CH
C719	1-162-927-11	s	CAPACITOR,CERAMIC 100PF/50V CH
C720	1-162-927-11	s	CAPACITOR,CERAMIC 100PF/50V CH
C721	1-162-927-11	s	CAPACITOR,CERAMIC 100PF/50V CH

(CP-371A/C BOARD [SUFFIX 11] for PLAYER)

Ref. No. or Q'ty	Part No.	SP	Description
C722	1-162-927-11	s	CAPACITOR,CERAMIC 100PF/50V CH
C724	1-126-394-11	s	CAPACITOR,ELECT 10MF/16V(CHIP)
C725	1-164-156-11	s	CAPACITOR,CERAMIC 0.1MF/25V F
C726	1-164-156-11	s	CAPACITOR,CERAMIC 0.1MF/25V F
C727	1-164-156-11	s	CAPACITOR,CERAMIC 0.1MF/25V F
C730	1-126-394-11	s	CAPACITOR,ELECT 10MF/16V(CHIP)
C731	1-164-156-11	s	CAPACITOR,CERAMIC 0.1MF/25V F
C732	1-164-156-11	s	CAPACITOR,CERAMIC 0.1MF/25V F
C733	1-162-927-11	s	CAPACITOR,CERAMIC 100PF/50V CH
C734	1-162-927-11	s	CAPACITOR,CERAMIC 100PF/50V CH
C735	1-162-927-11	s	CAPACITOR,CERAMIC 100PF/50V CH
C736	1-162-927-11	s	CAPACITOR,CERAMIC 100PF/50V CH
C737	1-162-927-11	s	CAPACITOR,CERAMIC 100PF/50V CH
C738	1-162-927-11	s	CAPACITOR,CERAMIC 100PF/50V CH
C739	1-162-927-11	s	CAPACITOR,CERAMIC 100PF/50V CH
C740	1-162-927-11	s	CAPACITOR,CERAMIC 100PF/50V CH
C741	1-162-927-11	s	CAPACITOR,CERAMIC 100PF/50V CH
C742	1-162-927-11	s	CAPACITOR,CERAMIC 100PF/50V CH
C746	1-164-156-11	s	CAPACITOR,CERAMIC 0.1MF/25V F
C747	1-104-913-11	s	CAPACITOR,TANTALUM 10MF/16V
C748	1-104-851-11	s	CAPACITOR,TANTALUM 10MF/10V
C749	1-164-156-11	s	CAPACITOR,CERAMIC 0.1MF/25V F
C750	1-162-927-11	s	CAPACITOR,CERAMIC 100PF/50V CH
C751	1-162-927-11	s	CAPACITOR,CERAMIC 100PF/50V CH
C752	1-162-927-11	s	CAPACITOR,CERAMIC 100PF/50V CH
C753	1-164-156-11	s	CAPACITOR,CERAMIC 0.1MF/25V F
C754	1-164-156-11	s	CAPACITOR,CERAMIC 0.1MF/25V F
C755	1-164-156-11	s	CAPACITOR,CERAMIC 0.1MF/25V F
C756	1-164-156-11	s	CAPACITOR,CERAMIC 0.1MF/25V F
C757	1-126-399-11	s	CAPACITOR ELECT 10MF/35V(CHIP)
C758	1-126-399-11	s	CAPACITOR ELECT 10MF/35V(CHIP)
C759	1-164-156-11	s	CAPACITOR,CERAMIC 0.1MF/25V F
C760	1-164-156-11	s	CAPACITOR,CERAMIC 0.1MF/25V F
C761	1-164-156-11	s	CAPACITOR,CERAMIC 0.1MF/25V F
C762	1-164-156-11	s	CAPACITOR,CERAMIC 0.1MF/25V F
C763	1-126-396-11	s	CAPACITOR,ELECT 47MF/16V(CHIP)
C764	1-126-396-11	s	CAPACITOR,ELECT 47MF/16V(CHIP)
CN1 *A	1-815-307-11	o	CONNECTOR ASSY, BNC
*C	1-815-087-11	s	CONNECTOR ASSY, BNC
CN10	1-766-727-11	o	SOCKET, D-SUB CONNECTOR (50P)
CN11	1-568-676-11	o	CONNECTOR,D-SUB 9P
CN12	1-568-676-11	o	CONNECTOR,D-SUB 9P
CN13	1-779-759-11	o	CONNECTOR, D-SUB 9P
CN14	1-794-229-11	o	CONNECTOR, ROUND TYPE (RECEPTA
CN15	1-568-674-11	o	CONNECTOR,D-SUB 15P
CN16	1-568-676-11	o	CONNECTOR,D-SUB 9P
CN710	1-695-223-21	o	PIN,CONNECTOR (SMD) 10P
D1	8-719-056-65	s	DIODE 1SS372-TE85L
D701	8-719-820-41	s	DIODE 1SS302
D702	8-719-820-41	s	DIODE 1SS302
D703	8-719-820-41	s	DIODE 1SS302
D704	8-719-820-41	s	DIODE 1SS302
D705	8-719-820-41	s	DIODE 1SS302
D706	8-719-820-41	s	DIODE 1SS302
D707	8-719-820-41	s	DIODE 1SS302
D708	8-719-056-65	s	DIODE 1SS372-TE85L
F1 ⚠	1-576-270-11	s	FUSE CHIP 4A/125V (6125)

(CP-371A/C BOARD [SUFFIX 11] for PLAYER)

Ref. No. or Q'ty	Part No.	SP	Description
FB1	1-469-379-11	s	FERRITE, EMI (SMD)
FB2	1-469-379-11	s	FERRITE, EMI (SMD)
FL1	1-239-896-12	s	FILTER, EMI (SMD)
FL2	1-239-896-12	s	FILTER, EMI (SMD)
FL3	1-239-896-12	s	FILTER, EMI (SMD)
FL4	1-239-896-12	s	FILTER, EMI (SMD)
FL5	1-239-896-12	s	FILTER, EMI (SMD)
FL6	1-239-896-12	s	FILTER, EMI (SMD)
FL7	1-239-896-12	s	FILTER, EMI (SMD)
FL8	1-239-896-12	s	FILTER, EMI (SMD)
FL9	1-239-896-12	s	FILTER, EMI (SMD)
FL10	1-239-896-12	s	FILTER, EMI (SMD)
FL11	1-239-896-12	s	FILTER, EMI (SMD)
FL12	1-239-896-12	s	FILTER, EMI (SMD)
FL13	1-239-896-12	s	FILTER, EMI (SMD)
FL14	1-239-896-12	s	FILTER, EMI (SMD)
FL15	1-239-896-12	s	FILTER, EMI (SMD)
FL16	1-239-896-12	s	FILTER, EMI (SMD)
FL17	1-239-896-12	s	FILTER, EMI (SMD)
FL18	1-239-896-12	s	FILTER, EMI (SMD)
FL19	1-239-896-12	s	FILTER, EMI (SMD)
FL20	1-239-896-12	s	FILTER, EMI (SMD)
FL21	1-239-896-12	s	FILTER, EMI (SMD)
FL22	1-239-896-12	s	FILTER, EMI (SMD)
FL23	1-239-896-12	s	FILTER, EMI (SMD)
FL24	1-239-896-12	s	FILTER, EMI (SMD)
FL25	1-239-896-12	s	FILTER, EMI (SMD)
FL26	1-239-896-12	s	FILTER, EMI (SMD)
FL27	1-239-896-12	s	FILTER, EMI (SMD)
FL28	1-239-896-12	s	FILTER, EMI (SMD)
FL29	1-239-896-12	s	FILTER, EMI (SMD)
FL30	1-239-896-12	s	FILTER, EMI (SMD)
FL31	1-239-895-11	s	FILTER, EMI (SMD)
FL32	1-239-895-11	s	FILTER, EMI (SMD)
FL33	1-239-895-11	s	FILTER, EMI (SMD)
FL34	1-239-895-11	s	FILTER, EMI (SMD)
IC100	6-700-915-01	s	IC SN74AHCT04PWR
IC102	8-759-592-08	s	IC AD8056ARM-REEL7
IC302 *A	8-759-592-08	s	IC AD8056ARM-REEL7
IC601	8-759-642-22	s	IC UPC29M05T-E2
IC602	8-759-539-89	s	IC LM2990SX-5.0
IC701	8-759-669-74	s	IC TL084CPWR-12
IC702	8-759-669-74	s	IC TL084CPWR-12
IC703	8-759-669-74	s	IC TL084CPWR-12
IC704	8-759-669-74	s	IC TL084CPWR-12
IC707	8-759-580-22	s	IC LB1721M-TR
IC708	8-759-580-22	s	IC LB1721M-TR
IC709	8-759-580-22	s	IC LB1721M-TR
IC710	8-759-580-22	s	IC LB1721M-TR
IC711	8-759-580-22	s	IC LB1721M-TR
IC712	8-759-549-01	s	IC SN74LV125APWR
IC713	8-759-491-50	s	IC TC74VHCT244AFT(EL)
IC714	8-759-523-84	s	IC TC74VHC14FT (EL)
IC715	8-759-523-84	s	IC TC74VHC14FT (EL)
IC716	8-759-468-72	s	IC AK6420AM (E2)
IC717	8-759-543-22	s	IC S-80843ALUP-EA7-T2
IC718	8-759-523-81	s	IC TC74VHC08FT(EL)
IC719	8-759-466-50	s	IC NJM78M12DLA(TE1)

(CP-371A/C BOARD [SUFFIX 11] for PLAYER)

Ref. No. or Q'ty		Part No.	SP	Description
IC721		8-759-466-51	s	IC NJM79M12DLA(TE1)
L1		1-416-511-11	s	COIL, CHOKE 47.0UH
L2		1-416-511-11	s	COIL, CHOKE 47.0UH
PS1	⚠	1-576-259-11	s	LINK,IC 0.6A (3225)
PS702	⚠	1-576-259-11	s	LINK,IC 0.6A (3225)
R100		1-218-692-11	s	RESISTOR,CHIP 1.0K 1/16W(1608)
R101		1-218-690-11	s	RESISTOR,CHIP 820 1/16W (1608)
R102		1-218-692-11	s	RESISTOR,CHIP 1.0K 1/16W(1608)
R103		1-218-689-11	s	RESISTOR CHIP 750 1/16W (1608)
R105		1-218-665-11	s	RESISTOR,CHIP 75 1/16W (1608)
R106		1-216-864-11	s	CONDUCTOR, CHIP (1608)
R200		1-218-692-11	s	RESISTOR,CHIP 1.0K 1/16W(1608)
R201		1-218-690-11	s	RESISTOR,CHIP 820 1/16W (1608)
R202		1-218-692-11	s	RESISTOR,CHIP 1.0K 1/16W(1608)
R203		1-218-689-11	s	RESISTOR CHIP 750 1/16W (1608)
R205		1-218-665-11	s	RESISTOR,CHIP 75 1/16W (1608)
R206		1-216-864-11	s	CONDUCTOR, CHIP (1608)
R300		1-218-692-11	s	RESISTOR,CHIP 1.0K 1/16W(1608)
R301	*A	1-218-690-11	s	RESISTOR,CHIP 820 1/16W (1608)
R302	*A	1-218-692-11	s	RESISTOR,CHIP 1.0K 1/16W(1608)
R303	*A	1-218-689-11	s	RESISTOR CHIP 750 1/16W (1608)
R305	*A	1-218-665-11	s	RESISTOR,CHIP 75 1/16W (1608)
R306	*A	1-216-864-11	s	CONDUCTOR, CHIP (1608)
R400		1-218-692-11	s	RESISTOR,CHIP 1.0K 1/16W(1608)
R401	*A	1-218-690-11	s	RESISTOR,CHIP 820 1/16W (1608)
R402	*A	1-218-692-11	s	RESISTOR,CHIP 1.0K 1/16W(1608)
R403	*A	1-218-689-11	s	RESISTOR CHIP 750 1/16W (1608)
R405	*A	1-218-665-11	s	RESISTOR,CHIP 75 1/16W (1608)
R406	*A	1-216-864-11	s	CONDUCTOR, CHIP (1608)
R701		1-218-740-11	s	RESISTOR,CHIP 100K 1/16W(1608)
R702		1-218-732-11	s	RESISTOR,CHIP 47K 1/16W(1608)
R703		1-218-732-11	s	RESISTOR,CHIP 47K 1/16W(1608)
R704		1-218-740-11	s	RESISTOR,CHIP 100K 1/16W(1608)
R705		1-218-732-11	s	RESISTOR,CHIP 47K 1/16W(1608)
R706		1-218-732-11	s	RESISTOR,CHIP 47K 1/16W(1608)
R707		1-218-740-11	s	RESISTOR,CHIP 100K 1/16W(1608)
R708		1-218-732-11	s	RESISTOR,CHIP 47K 1/16W(1608)
R709		1-218-732-11	s	RESISTOR,CHIP 47K 1/16W(1608)
R710		1-218-740-11	s	RESISTOR,CHIP 100K 1/16W(1608)
R711		1-218-732-11	s	RESISTOR,CHIP 47K 1/16W(1608)
R712		1-218-732-11	s	RESISTOR,CHIP 47K 1/16W(1608)
R713		1-218-740-11	s	RESISTOR,CHIP 100K 1/16W(1608)
R714		1-218-732-11	s	RESISTOR,CHIP 47K 1/16W(1608)
R715		1-218-732-11	s	RESISTOR,CHIP 47K 1/16W(1608)
R716		1-218-740-11	s	RESISTOR,CHIP 100K 1/16W(1608)
R717		1-218-732-11	s	RESISTOR,CHIP 47K 1/16W(1608)
R718		1-218-732-11	s	RESISTOR,CHIP 47K 1/16W(1608)
R719		1-218-740-11	s	RESISTOR,CHIP 100K 1/16W(1608)
R720		1-218-732-11	s	RESISTOR,CHIP 47K 1/16W(1608)
R721		1-218-732-11	s	RESISTOR,CHIP 47K 1/16W(1608)
R722		1-218-732-11	s	RESISTOR,CHIP 47K 1/16W(1608)
R723		1-218-668-11	s	RESISTOR,CHIP 100 1/16W (1608)
R724		1-218-732-11	s	RESISTOR,CHIP 47K 1/16W(1608)
R725		1-218-668-11	s	RESISTOR,CHIP 100 1/16W (1608)
R762		1-218-732-11	s	RESISTOR,CHIP 47K 1/16W(1608)
R765		1-218-740-11	s	RESISTOR,CHIP 100K 1/16W(1608)
R766		1-218-732-11	s	RESISTOR,CHIP 47K 1/16W(1608)

(CP-371A/C BOARD [SUFFIX 11] for PLAYER)

Ref. No. or Q'ty	Part No.	SP	Description
R767	1-218-708-11	s	RESISTOR,CHIP 4.7K 1/16W(1608)
R768	1-218-708-11	s	RESISTOR,CHIP 4.7K 1/16W(1608)
R769	1-218-708-11	s	RESISTOR,CHIP 4.7K 1/16W(1608)
R770	1-218-708-11	s	RESISTOR,CHIP 4.7K 1/16W(1608)
R771	1-218-708-11	s	RESISTOR,CHIP 4.7K 1/16W(1608)
R772	1-218-708-11	s	RESISTOR,CHIP 4.7K 1/16W(1608)
R773	1-218-708-11	s	RESISTOR,CHIP 4.7K 1/16W(1608)
R774	1-218-708-11	s	RESISTOR,CHIP 4.7K 1/16W(1608)
R775	1-218-708-11	s	RESISTOR,CHIP 4.7K 1/16W(1608)
R776	1-218-708-11	s	RESISTOR,CHIP 4.7K 1/16W(1608)
R783	1-218-732-11	s	RESISTOR,CHIP 47K 1/16W(1608)
R784	1-218-732-11	s	RESISTOR,CHIP 47K 1/16W(1608)
R789	1-218-668-11	s	RESISTOR,CHIP 100 1/16W (1608)
R790	1-218-732-11	s	RESISTOR,CHIP 47K 1/16W(1608)
RB701	1-239-389-11	s	RESISTOR,NETWORK 47K (1608)
RB702	1-233-270-11	o	RESISTOR, NETWORK (8 GANG) 10K
RB703	1-233-270-11	o	RESISTOR, NETWORK (8 GANG) 10K
RB704	1-233-270-11	o	RESISTOR, NETWORK (8 GANG) 10K
RB705	1-233-270-11	o	RESISTOR, NETWORK (8 GANG) 10K
RB706	1-233-270-11	o	RESISTOR, NETWORK (8 GANG) 10K
RB707	1-239-412-11	s	NETWORK, RESISTOR 100 (1608)
RB708	1-233-665-11	s	NETWORK, RES (8 GANG) 47K
X701	1-767-922-11	s	VIBRATOR, CERAMIC (16MHZ)

CP-371A/C BOARD [SUFFIX 12-] for PLAYER

---

*A: [Lot No. 361 -] HDW-M2100/P
MSW-M2100/P
[Lot No. 495 -] MSW-M2100E/P
*C: [Lot No. 361 -] HDW-A2100

Ref. No. or Q'ty	Part No.	SP	Description
1pc	*A A-8329-644-A	s	MOUNTED CIRCUIT BOARD, CP-371A
	*C A-8329-648-A	s	MOUNTED CIRCUIT BOARD, CP-371C
2pcs	3-673-910-00	o	SCREW (STEEL)
C1	1-126-396-11	s	CAPACITOR,ELECT 47MF/16V(CHIP)
C2	1-126-396-11	s	CAPACITOR,ELECT 47MF/16V(CHIP)
C3	1-131-992-11	s	CAP, CERAMIC 100000PF F 1608
C4	1-131-992-11	s	CAP, CERAMIC 100000PF F 1608
C5	1-126-394-11	s	CAPACITOR,ELECT 10MF/16V(CHIP)
C6	1-126-394-11	s	CAPACITOR,ELECT 10MF/16V(CHIP)
C7	1-131-992-11	s	CAP, CERAMIC 100000PF F 1608
C8	1-131-992-11	s	CAP, CERAMIC 100000PF F 1608
C9	1-126-396-11	s	CAPACITOR,ELECT 47MF/16V(CHIP)
C10	1-131-992-11	s	CAP, CERAMIC 100000PF F 1608
C11	1-126-396-11	s	CAPACITOR,ELECT 47MF/16V(CHIP)
C12	1-131-992-11	s	CAP, CERAMIC 100000PF F 1608
C100	1-131-992-11	s	CAP, CERAMIC 100000PF F 1608
C102	1-162-910-11	s	CAPACITOR,CERAMIC 5PF/50V 1608
C104	1-126-396-11	s	CAPACITOR,ELECT 47MF/16V(CHIP)
C106	1-162-921-11	s	CAPACITOR,CERAMIC 33PF/50V CH
C202	1-162-910-11	s	CAPACITOR,CERAMIC 5PF/50V 1608
C203	1-131-992-11	s	CAP, CERAMIC 100000PF F 1608
C204	1-126-396-11	s	CAPACITOR,ELECT 47MF/16V(CHIP)
C205	1-131-992-11	s	CAP, CERAMIC 100000PF F 1608
C206	1-162-921-11	s	CAPACITOR,CERAMIC 33PF/50V CH
C301	*A 1-162-919-11	s	CAPACITOR,CERAMIC 22PF/50V CH
C302	*A 1-162-910-11	s	CAPACITOR,CERAMIC 5PF/50V 1608
C304	*A 1-126-396-11	s	CAPACITOR,ELECT 47MF/16V(CHIP)
C306	*A 1-162-916-11	s	CAPACITOR,CERAMIC 12PF/50V CH
C401	*A 1-162-919-11	s	CAPACITOR,CERAMIC 22PF/50V CH
C402	*A 1-162-910-11	s	CAPACITOR,CERAMIC 5PF/50V 1608
C403	*A 1-131-992-11	s	CAP, CERAMIC 100000PF F 1608
C404	*A 1-126-396-11	s	CAPACITOR,ELECT 47MF/16V(CHIP)
C405	*A 1-131-992-11	s	CAP, CERAMIC 100000PF F 1608
C406	*A 1-162-916-11	s	CAPACITOR,CERAMIC 12PF/50V CH
C701	1-162-927-11	s	CAPACITOR,CERAMIC 100PF/50V CH
C702	1-131-992-11	s	CAP, CERAMIC 100000PF F 1608
C703	1-131-992-11	s	CAP, CERAMIC 100000PF F 1608
C704	1-162-927-11	s	CAPACITOR,CERAMIC 100PF/50V CH
C705	1-162-927-11	s	CAPACITOR,CERAMIC 100PF/50V CH
C706	1-131-992-11	s	CAP, CERAMIC 100000PF F 1608
C707	1-131-992-11	s	CAP, CERAMIC 100000PF F 1608
C708	1-162-927-11	s	CAPACITOR,CERAMIC 100PF/50V CH
C709	1-162-927-11	s	CAPACITOR,CERAMIC 100PF/50V CH
C710	1-131-992-11	s	CAP, CERAMIC 100000PF F 1608
C711	1-131-992-11	s	CAP, CERAMIC 100000PF F 1608
C712	1-162-927-11	s	CAPACITOR,CERAMIC 100PF/50V CH
C713	1-162-927-11	s	CAPACITOR,CERAMIC 100PF/50V CH
C714	1-131-992-11	s	CAP, CERAMIC 100000PF F 1608
C715	1-131-992-11	s	CAP, CERAMIC 100000PF F 1608
C716	1-162-927-11	s	CAPACITOR,CERAMIC 100PF/50V CH
C717	1-162-927-11	s	CAPACITOR,CERAMIC 100PF/50V CH
C718	1-162-927-11	s	CAPACITOR,CERAMIC 100PF/50V CH
C719	1-162-927-11	s	CAPACITOR,CERAMIC 100PF/50V CH
C720	1-162-927-11	s	CAPACITOR,CERAMIC 100PF/50V CH
C721	1-162-927-11	s	CAPACITOR,CERAMIC 100PF/50V CH

(CP-371A/C BOARD [SUFFIX 12-] for PLAYER)

Ref. No. or Q'ty	Part No.	SP	Description
C722	1-162-927-11	s	CAPACITOR,CERAMIC 100PF/50V CH.
C724	1-126-394-11	s	CAPACITOR,ELECT 10MF/16V(CHIP)
C725	1-131-992-11	s	CAP, CERAMIC 100000PF F 1608
C726	1-131-992-11	s	CAP, CERAMIC 100000PF F 1608
C727	1-131-992-11	s	CAP, CERAMIC 100000PF F 1608
C730	1-126-394-11	s	CAPACITOR,ELECT 10MF/16V(CHIP)
C731	1-131-992-11	s	CAP, CERAMIC 100000PF F 1608
C732	1-131-992-11	s	CAP, CERAMIC 100000PF F 1608
C733	1-162-927-11	s	CAPACITOR,CERAMIC 100PF/50V CH
C734	1-162-927-11	s	CAPACITOR,CERAMIC 100PF/50V CH
C735	1-162-927-11	s	CAPACITOR,CERAMIC 100PF/50V CH
C736	1-162-927-11	s	CAPACITOR,CERAMIC 100PF/50V CH
C737	1-162-927-11	s	CAPACITOR,CERAMIC 100PF/50V CH
C738	1-162-927-11	s	CAPACITOR,CERAMIC 100PF/50V CH
C739	1-162-927-11	s	CAPACITOR,CERAMIC 100PF/50V CH
C740	1-162-927-11	s	CAPACITOR,CERAMIC 100PF/50V CH
C741	1-162-927-11	s	CAPACITOR,CERAMIC 100PF/50V CH
C742	1-162-927-11	s	CAPACITOR,CERAMIC 100PF/50V CH
C747	1-127-692-11	s	CAP, CHIP CERAMIC 10MF B 3216
C748	1-127-692-11	s	CAP, CHIP CERAMIC 10MF B 3216
C750	1-162-927-11	s	CAPACITOR,CERAMIC 100PF/50V CH
C751	1-162-927-11	s	CAPACITOR,CERAMIC 100PF/50V CH
C752	1-162-927-11	s	CAPACITOR,CERAMIC 100PF/50V CH
C753	1-131-992-11	s	CAP, CERAMIC 100000PF F 1608
C754	1-131-992-11	s	CAP, CERAMIC 100000PF F 1608
C755	1-131-992-11	s	CAP, CERAMIC 100000PF F 1608
C756	1-131-992-11	s	CAP, CERAMIC 100000PF F 1608
C757	1-126-399-11	s	CAPACITOR ELECT 10MF/35V(CHIP)
C758	1-126-399-11	s	CAPACITOR ELECT 10MF/35V(CHIP)
C759	1-131-992-11	s	CAP, CERAMIC 100000PF F 1608
C760	1-131-992-11	s	CAP, CERAMIC 100000PF F 1608
C761	1-131-992-11	s	CAP, CERAMIC 100000PF F 1608
C762	1-131-992-11	s	CAP, CERAMIC 100000PF F 1608
C763	1-126-396-11	s	CAPACITOR,ELECT 47MF/16V(CHIP)
C764	1-126-396-11	s	CAPACITOR,ELECT 47MF/16V(CHIP)
C765	1-126-396-11	s	CAPACITOR,ELECT 47MF/16V(CHIP)
C766	1-131-992-11	s	CAP, CERAMIC 100000PF F 1608
CN1	*A 1-815-307-12	s	CONNECTOR ASSY, BNC
	*C 1-815-087-12	s	CONNECTOR ASSY, BNC
CN10	1-766-727-11	o	SOCKET, D-SUB CONNECTOR (50P)
CN11	1-568-676-11	o	CONNECTOR,D-SUB 9P
CN12	1-568-676-11	o	CONNECTOR,D-SUB 9P
CN13	1-779-759-11	o	CONNECTOR, D-SUB 9P
CN14	1-794-229-11	o	CONNECTOR, ROUND TYPE (RECEPTA
CN15	1-568-674-11	o	CONNECTOR,D-SUB 15P
CN16	1-568-676-11	o	CONNECTOR,D-SUB 9P
CN710	1-695-223-11	s	PIN, CONNECTOR (SMD) 10P
D1	8-719-056-65	s	DIODE 1SS372-TE85L
D701	8-719-820-41	s	DIODE 1SS302
D702	8-719-820-41	s	DIODE 1SS302
D703	8-719-820-41	s	DIODE 1SS302
D704	8-719-820-41	s	DIODE 1SS302
D705	8-719-820-41	s	DIODE 1SS302
D706	8-719-820-41	s	DIODE 1SS302
D707	8-719-820-41	s	DIODE 1SS302
D708	8-719-056-65	s	DIODE 1SS372-TE85L
D709	8-719-056-65	s	DIODE 1SS372-TE85L
F1	1-576-270-11	s	FUSE CHIP 4A/125V (6125)

(CP-371A/C BOARD [SUFFIX 12-] for PLAYER)

Ref. No. or Q'ty	Part No.	SP	Description
FB1	1-469-379-11	s	FERRITE, EMI (SMD)
FB2	1-469-379-11	s	FERRITE, EMI (SMD)
FB3	1-469-379-11	s	FERRITE, EMI (SMD)
FB4	1-469-379-11	s	FERRITE, EMI (SMD)
FL1	⚠ 1-239-896-12	s	FILTER, EMI (SMD)
FL2	1-239-896-12	s	FILTER, EMI (SMD)
FL3	1-239-896-12	s	FILTER, EMI (SMD)
FL4	1-239-896-12	s	FILTER, EMI (SMD)
FL5	1-239-896-12	s	FILTER, EMI (SMD)
FL6	1-239-896-12	s	FILTER, EMI (SMD)
FL7	1-239-896-12	s	FILTER, EMI (SMD)
FL8	1-239-896-12	s	FILTER, EMI (SMD)
FL9	1-239-896-12	s	FILTER, EMI (SMD)
FL10	1-239-896-12	s	FILTER, EMI (SMD)
FL11	1-239-896-12	s	FILTER, EMI (SMD)
FL12	1-239-896-12	s	FILTER, EMI (SMD)
FL13	1-239-896-12	s	FILTER, EMI (SMD)
FL14	1-239-896-12	s	FILTER, EMI (SMD)
FL15	1-239-896-12	s	FILTER, EMI (SMD)
FL16	1-239-896-12	s	FILTER, EMI (SMD)
FL17	1-239-896-12	s	FILTER, EMI (SMD)
FL18	1-239-896-12	s	FILTER, EMI (SMD)
FL19	1-239-896-12	s	FILTER, EMI (SMD)
FL20	1-239-896-12	s	FILTER, EMI (SMD)
FL21	1-239-896-12	s	FILTER, EMI (SMD)
FL22	1-239-896-12	s	FILTER, EMI (SMD)
FL23	1-239-896-12	s	FILTER, EMI (SMD)
FL25	1-239-896-12	s	FILTER, EMI (SMD)
FL27	1-239-896-12	s	FILTER, EMI (SMD)
FL28	1-239-896-12	s	FILTER, EMI (SMD)
FL29	1-239-896-12	s	FILTER, EMI (SMD)
FL30	1-239-896-12	s	FILTER, EMI (SMD)
FL31	1-239-895-11	s	FILTER, EMI (SMD)
FL32	1-239-895-11	s	FILTER, EMI (SMD)
FL33	1-239-895-11	s	FILTER, EMI (SMD)
FL34	1-239-895-11	s	FILTER, EMI (SMD)
IC100	6-700-915-01	s	IC SN74AHCT04PWR
IC102	8-759-592-08	s	IC AD8056ARMZ-REEL7
IC302 *A	8-759-592-08	s	IC AD8056ARMZ-REEL7
IC601	8-759-642-22	s	IC UPC29M05T-E2
IC602	8-759-539-89	s	IC LM2990SX-5.0
IC701	8-759-669-74	s	IC TL084CPWR-12
IC702	8-759-669-74	s	IC TL084CPWR-12
IC703	8-759-669-74	s	IC TL084CPWR-12
IC704	8-759-669-74	s	IC TL084CPWR-12
IC707	8-759-580-22	s	IC LB1721M-TR
IC708	8-759-580-22	s	IC LB1721M-TR
IC709	8-759-580-22	s	IC LB1721M-TR
IC710	8-759-580-22	s	IC LB1721M-TR
IC711	8-759-580-22	s	IC LB1721M-TR
IC712	8-759-549-01	s	IC SN74LV125APWR
IC713	8-759-491-50	s	IC TC74VHCT244AFT(EL)
IC714	8-759-523-84	s	IC TC74VHC14FT (EL)
IC715	8-759-523-84	s	IC TC74VHC14FT (EL)
IC716	8-759-468-72	s	IC AK6420AM (E2)
IC717	6-704-164-01	s	IC S-80845CLUA-B66T2G
IC718	8-759-523-81	s	IC TC74VHC08FT(EL)

(CP-371A/C BOARD [SUFFIX 12-] for PLAYER)

Ref. No. or Q'ty	Part No.	SP	Description
IC719	6-702-295-01	s	IC NJM78M12DL1A-TE1
IC721	6-702-297-01	s	IC NJM79M12DL1A-TE1
IC722	6-702-295-01	s	IC NJM78M12DL1A-TE1
L1	1-416-511-11	s	COIL, CHOKE 47.0UH
L2	1-416-511-11	s	COIL, CHOKE 47.0UH
PS1	⚠ 1-576-259-11	s	LINK,IC 0.6A (3225)
PS702	⚠ 1-576-259-11	s	LINK,IC 0.6A (3225)
R100	1-218-847-11	s	RESISTOR, CHIP 1K 1/10W (1608)
R101	1-218-845-11	s	RESISTOR,CHIP 820 1/10W (1608)
R102	1-218-847-11	s	RESISTOR, CHIP 1K 1/10W (1608)
R103	1-218-844-11	s	RESISTOR,CHIP 750 1/10W (1608)
R105	1-211-990-11	s	RESISTOR,CHIP 75 1/10W (1608)
R106	1-216-864-11	s	CONDUCTOR, CHIP (1608)
R200	1-218-847-11	s	RESISTOR, CHIP 1K 1/10W (1608)
R201	1-218-845-11	s	RESISTOR,CHIP 820 1/10W (1608)
R202	1-218-847-11	s	RESISTOR, CHIP 1K 1/10W (1608)
R203	1-218-844-11	s	RESISTOR,CHIP 750 1/10W (1608)
R205	1-211-990-11	s	RESISTOR,CHIP 75 1/10W (1608)
R206	1-216-864-11	s	CONDUCTOR, CHIP (1608)
R300	1-218-847-11	s	RESISTOR, CHIP 1K 1/10W (1608)
R301 *A	1-218-845-11	s	RESISTOR,CHIP 820 1/10W (1608)
R302 *A	1-218-847-11	s	RESISTOR, CHIP 1K 1/10W (1608)
R303 *A	1-218-844-11	s	RESISTOR,CHIP 750 1/10W (1608)
R305 *A	1-211-990-11	s	RESISTOR,CHIP 75 1/10W (1608)
R306 *A	1-216-864-11	s	CONDUCTOR, CHIP (1608)
R400	1-218-847-11	s	RESISTOR, CHIP 1K 1/10W (1608)
R401 *A	1-218-845-11	s	RESISTOR,CHIP 820 1/10W (1608)
R402 *A	1-218-847-11	s	RESISTOR, CHIP 1K 1/10W (1608)
R403 *A	1-218-844-11	s	RESISTOR,CHIP 750 1/10W (1608)
R405 *A	1-211-990-11	s	RESISTOR,CHIP 75 1/10W (1608)
R406 *A	1-216-864-11	s	CONDUCTOR, CHIP (1608)
R701	1-218-895-11	s	RESISTOR,CHIP 100K 1/10W(1608)
R702	1-218-887-11	s	RESISTOR,CHIP 47K 1/10W (1608)
R703	1-218-887-11	s	RESISTOR,CHIP 47K 1/10W (1608)
R704	1-218-895-11	s	RESISTOR,CHIP 100K 1/10W(1608)
R705	1-218-887-11	s	RESISTOR,CHIP 47K 1/10W (1608)
R706	1-218-887-11	s	RESISTOR,CHIP 47K 1/10W (1608)
R707	1-218-895-11	s	RESISTOR,CHIP 100K 1/10W(1608)
R708	1-218-887-11	s	RESISTOR,CHIP 47K 1/10W (1608)
R709	1-218-887-11	s	RESISTOR,CHIP 47K 1/10W (1608)
R710	1-218-895-11	s	RESISTOR,CHIP 100K 1/10W(1608)
R711	1-218-887-11	s	RESISTOR,CHIP 47K 1/10W (1608)
R712	1-218-887-11	s	RESISTOR,CHIP 47K 1/10W (1608)
R713	1-218-895-11	s	RESISTOR,CHIP 100K 1/10W(1608)
R714	1-218-887-11	s	RESISTOR,CHIP 47K 1/10W (1608)
R715	1-218-887-11	s	RESISTOR,CHIP 47K 1/10W (1608)
R716	1-218-895-11	s	RESISTOR,CHIP 100K 1/10W(1608)
R717	1-218-887-11	s	RESISTOR,CHIP 47K 1/10W (1608)
R718	1-218-887-11	s	RESISTOR,CHIP 47K 1/10W (1608)
R719	1-218-895-11	s	RESISTOR,CHIP 100K 1/10W(1608)
R720	1-218-887-11	s	RESISTOR,CHIP 47K 1/10W (1608)
R721	1-218-887-11	s	RESISTOR,CHIP 47K 1/10W (1608)
R722	1-218-887-11	s	RESISTOR,CHIP 47K 1/10W (1608)
R723	1-218-823-11	s	RESISTOR,CHIP 100 1/10W (1608)
R724	1-218-887-11	s	RESISTOR,CHIP 47K 1/10W (1608)
R725	1-218-823-11	s	RESISTOR,CHIP 100 1/10W (1608)
R762	1-218-887-11	s	RESISTOR,CHIP 47K 1/10W (1608)

(CP-371A/C BOARD [SUFFIX 12-] for PLAYER)

Ref. No. or Q'ty	Part No.	SP	Description
R765	1-218-895-11	s	RESISTOR,CHIP 100K 1/10W(1608)
R766	1-218-887-11	s	RESISTOR,CHIP 47K 1/10W (1608)
R767	1-218-863-11	s	RESISTOR,CHIP 4.7K 1/10W(1608)
R768	1-218-863-11	s	RESISTOR,CHIP 4.7K 1/10W(1608)
R769	1-218-863-11	s	RESISTOR,CHIP 4.7K 1/10W(1608)
R770	1-218-863-11	s	RESISTOR,CHIP 4.7K 1/10W(1608)
R771	1-218-863-11	s	RESISTOR,CHIP 4.7K 1/10W(1608)
R772	1-218-863-11	s	RESISTOR,CHIP 4.7K 1/10W(1608)
R773	1-218-863-11	s	RESISTOR,CHIP 4.7K 1/10W(1608)
R774	1-218-863-11	s	RESISTOR,CHIP 4.7K 1/10W(1608)
R775	1-218-863-11	s	RESISTOR,CHIP 4.7K 1/10W(1608)
R776	1-218-863-11	s	RESISTOR,CHIP 4.7K 1/10W(1608)
R783	1-218-887-11	s	RESISTOR,CHIP 47K 1/10W (1608)
R784	1-218-887-11	s	RESISTOR,CHIP 47K 1/10W (1608)
R789	1-218-823-11	s	RESISTOR,CHIP 100 1/10W (1608)
R790	1-218-887-11	s	RESISTOR,CHIP 47K 1/10W (1608)
RB701	1-233-578-11	s	RESISTOR,CHIP NETWORK 47K
RB702	1-233-270-11	s	RESISTOR, NETWORK (8 GANG) 10K
RB703	1-233-270-11	s	RESISTOR, NETWORK (8 GANG) 10K
RB704	1-233-270-11	s	RESISTOR, NETWORK (8 GANG) 10K
RB705	1-233-270-11	s	RESISTOR, NETWORK (8 GANG) 10K
RB706	1-233-270-11	s	RESISTOR, NETWORK (8 GANG) 10K
RB707	1-233-576-11	s	RESISTOR,CHIP NETWORK 100
RB708	1-233-665-11	s	NETWORK, RES (8 GANG) 47K
X701	1-767-922-11	s	VIBRATOR, CERAMIC (16MHZ)

CUE-13 BOARD [SUFFIX 11]

[Lot No. 261 - 315] HDW-2000, M2000/P, M2100/P, A2100
MSW-M2000/P, M2100/P

Ref. No. or Q'ty	Part No.	SP	Description
1pc	A-8327-129-A	o	MOUNTED CIRCUIT BOARD, CUE-13
1pc	3-629-688-01	o	SHIELD CASE(U),CUE
1pc	3-629-689-01	o	SHIELD CASE(B),CUE
C100	1-115-155-11	s	CAPACITOR,ELECT 22MF/16V(BP)
C101	1-115-155-11	s	CAPACITOR,ELECT 22MF/16V(BP)
C102	1-162-927-11	s	CAPACITOR,CERAMIC 100PF/50V CH
C103	1-162-927-11	s	CAPACITOR,CERAMIC 100PF/50V CH
C104	1-104-851-11	s	CAPACITOR,TANTALUM 10MF/10V
C105	1-104-851-11	s	CAPACITOR,TANTALUM 10MF/10V
C106	1-107-826-11	s	CAPACITOR,CHIP CERAMIC 0.1MF
C107	1-107-826-11	s	CAPACITOR,CHIP CERAMIC 0.1MF
C109	1-162-927-11	s	CAPACITOR,CERAMIC 100PF/50V CH
C110	1-162-927-11	s	CAPACITOR,CERAMIC 100PF/50V CH
C111	1-162-923-11	s	CAPACITOR,CERAMIC 47PF/50V CH
C112	1-162-927-11	s	CAPACITOR,CERAMIC 100PF/50V CH
C113	1-162-923-11	s	CAPACITOR,CERAMIC 47PF/50V CH
C114	1-115-153-11	s	CAPACITOR,ELECT 4.7MF/16V(BP)
C115	1-162-927-11	s	CAPACITOR,CERAMIC 100PF/50V CH
C116	1-115-153-11	s	CAPACITOR,ELECT 4.7MF/16V(BP)
C117	1-126-399-11	s	CAPACITOR ELECT 10MF/35V(CHIP)
C118	1-126-399-11	s	CAPACITOR ELECT 10MF/35V(CHIP)
C119	1-107-826-11	s	CAPACITOR,CHIP CERAMIC 0.1MF
C120	1-107-826-11	s	CAPACITOR,CHIP CERAMIC 0.1MF
C121	1-115-153-11	s	CAPACITOR,ELECT 4.7MF/16V(BP)
C122	1-115-153-11	s	CAPACITOR,ELECT 4.7MF/16V(BP)
C123	1-162-919-11	s	CAPACITOR,CERAMIC 22PF/50V CH
C124	1-126-399-11	s	CAPACITOR ELECT 10MF/35V(CHIP)
C125	1-126-399-11	s	CAPACITOR ELECT 10MF/35V(CHIP)
C126	1-107-826-11	s	CAPACITOR,CHIP CERAMIC 0.1MF
C127	1-115-153-11	s	CAPACITOR,ELECT 4.7MF/16V(BP)
C128	1-107-826-11	s	CAPACITOR,CHIP CERAMIC 0.1MF
C130	1-162-919-11	s	CAPACITOR,CERAMIC 22PF/50V CH
C131	1-115-416-11	s	CAPACITOR,CERAMIC 1000PF/25V
C132	1-115-416-11	s	CAPACITOR,CERAMIC 1000PF/25V
C133	1-115-339-11	s	CAPACITOR,CERAMIC 0.1MF/50V
C134	1-162-927-11	s	CAPACITOR,CERAMIC 100PF/50V CH
C135	1-162-919-11	s	CAPACITOR,CERAMIC 22PF/50V CH
C136	1-115-416-11	s	CAPACITOR,CERAMIC 1000PF/25V
C137	1-162-966-11	s	CAPACITOR,CERAMIC 2200PF/50V B
C139	1-115-153-11	s	CAPACITOR,ELECT 4.7MF/16V(BP)
C140	1-162-923-11	s	CAPACITOR,CERAMIC 47PF/50V CH
C141	1-113-986-11	s	CAPACITOR,TANTALUM 2.2MF/25V
C142	1-162-927-11	s	CAPACITOR,CERAMIC 100PF/50V CH
C143	1-162-919-11	s	CAPACITOR,CERAMIC 22PF/50V CH
C144	1-162-919-11	s	CAPACITOR,CERAMIC 22PF/50V CH
C145	1-115-153-11	s	CAPACITOR,ELECT 4.7MF/16V(BP)
C146	1-115-153-11	s	CAPACITOR,ELECT 4.7MF/16V(BP)
C147	1-162-919-11	s	CAPACITOR,CERAMIC 22PF/50V CH
C148	1-162-927-11	s	CAPACITOR,CERAMIC 100PF/50V CH
C149	1-162-927-11	s	CAPACITOR,CERAMIC 100PF/50V CH
C150	1-115-153-11	s	CAPACITOR,ELECT 4.7MF/16V(BP)
C151	1-115-153-11	s	CAPACITOR,ELECT 4.7MF/16V(BP)
C152	1-115-416-11	s	CAPACITOR,CERAMIC 1000PF/25V
C153	1-126-391-11	s	CAPACITOR ELECT 47MF/6.3V(105)
C154	1-126-399-11	s	CAPACITOR ELECT 10MF/35V(CHIP)
C155	1-126-399-11	s	CAPACITOR ELECT 10MF/35V(CHIP)

(CUE-13 BOARD [SUFFIX 11])

Ref. No. or Q'ty	Part No.	SP	Description
C156	1-107-682-11	s	CAPACITOR,CHIP 1MF/16V (3216)
C158	1-107-826-11	s	CAPACITOR,CHIP CERAMIC 0.1MF
C159	1-107-826-11	s	CAPACITOR,CHIP CERAMIC 0.1MF
C160	1-164-156-11	s	CAPACITOR,CERAMIC 0.1MF/25V F
C161	1-164-156-11	s	CAPACITOR,CERAMIC 0.1MF/25V F
C162	1-164-156-11	s	CAPACITOR,CERAMIC 0.1MF/25V F
C163	1-164-156-11	s	CAPACITOR,CERAMIC 0.1MF/25V F
C164	1-164-156-11	s	CAPACITOR,CERAMIC 0.1MF/25V F
C165	1-164-156-11	s	CAPACITOR,CERAMIC 0.1MF/25V F
C166	1-164-156-11	s	CAPACITOR,CERAMIC 0.1MF/25V F
C167	1-164-156-11	s	CAPACITOR,CERAMIC 0.1MF/25V F
C168	1-162-919-11	s	CAPACITOR,CERAMIC 22PF/50V CH
C169	1-162-919-11	s	CAPACITOR,CERAMIC 22PF/50V CH
C170	1-162-919-11	s	CAPACITOR,CERAMIC 22PF/50V CH
C171	1-162-919-11	s	CAPACITOR,CERAMIC 22PF/50V CH
C174	1-162-927-11	s	CAPACITOR,CERAMIC 100PF/50V CH
C175	1-162-927-11	s	CAPACITOR,CERAMIC 100PF/50V CH
C176	1-164-156-11	s	CAPACITOR,CERAMIC 0.1MF/25V F
C300	1-107-826-11	s	CAPACITOR,CHIP CERAMIC 0.1MF
C301	1-107-826-11	s	CAPACITOR,CHIP CERAMIC 0.1MF
C302	1-107-826-11	s	CAPACITOR,CHIP CERAMIC 0.1MF
C303	1-107-826-11	s	CAPACITOR,CHIP CERAMIC 0.1MF
C304	1-107-826-11	s	CAPACITOR,CHIP CERAMIC 0.1MF
C305	1-107-826-11	s	CAPACITOR,CHIP CERAMIC 0.1MF
C307	1-107-826-11	s	CAPACITOR,CHIP CERAMIC 0.1MF
C309	1-126-390-11	s	CAPACITOR ELECT 22MF/6.3V(105)
C310	1-126-390-11	s	CAPACITOR ELECT 22MF/6.3V(105)
C311	1-126-399-11	s	CAPACITOR ELECT 10MF/35V(CHIP)
C312	1-126-399-11	s	CAPACITOR ELECT 10MF/35V(CHIP)
C313	1-107-826-11	s	CAPACITOR,CHIP CERAMIC 0.1MF
C314	1-107-826-11	s	CAPACITOR,CHIP CERAMIC 0.1MF
C315	1-126-390-11	s	CAPACITOR ELECT 22MF/6.3V(105)
CN100	1-569-465-11	o	PIN, DIN CONNECTOR (DIP) 48P
D100	8-719-024-81	s	DIODE 1SS300-TE85L
D102	8-719-068-64	s	DIODE MA143A-(TX).SO
D103	8-719-068-64	s	DIODE MA143A-(TX).SO
D107	8-719-820-41	s	DIODE 1SS302
D108	8-719-820-41	s	DIODE 1SS302
D109	8-719-820-41	s	DIODE 1SS302
D112	8-719-024-81	s	DIODE 1SS300-TE85L
D113	8-719-068-64	s	DIODE MA143A-(TX).SO
D114	8-719-068-64	s	DIODE MA143A-(TX).SO
D115	8-719-820-41	s	DIODE 1SS302
D300	8-719-941-04	s	DIODE SB007-03CP
D301	8-719-941-04	s	DIODE SB007-03CP
F300	⚠ 1-533-282-21	s	CIRCUIT PROTECTOR 2A (3225)
F301	⚠ 1-533-282-21	s	CIRCUIT PROTECTOR 2A (3225)
F302	⚠ 1-533-282-21	s	CIRCUIT PROTECTOR 2A (3225)
IC100	8-759-711-85	s	IC NJM4580E-D
IC101	8-759-112-66	s	IC UPC812G2
IC102	8-759-112-66	s	IC UPC812G2
IC103	8-759-711-85	s	IC NJM4580E-D
IC104	8-759-711-85	s	IC NJM4580E-D
IC105	8-759-596-42	s	IC THAT2181SC-TE2
IC106	8-759-596-42	s	IC THAT2181SC-TE2
IC107	8-759-422-21	s	IC NJM4580VTE2
IC108	8-759-422-21	s	IC NJM4580VTE2

(CUE-13 BOARD [SUFFIX 11])

Ref. No. or Q'ty	Part No.	SP	Description
IC109	8-759-422-21	s	IC NJM4580VTE2
IC110	8-759-711-85	s	IC NJM4580E-D
IC111	8-759-112-66	s	IC UPC812G2
IC112	8-759-422-21	s	IC NJM4580VTE2
IC113	8-759-711-85	s	IC NJM4580E-D
IC114	8-759-700-96	s	IC NJM5534M
IC115	8-759-700-96	s	IC NJM5534M
IC116	8-759-700-96	s	IC NJM5534M
IC117	8-759-422-21	s	IC NJM4580VTE2
IC118	8-759-700-96	s	IC NJM5534M
IC119	8-759-422-21	s	IC NJM4580VTE2
IC300	8-759-533-85	s	IC L88M05T-FA-TL
IC301	8-759-539-89	s	IC LM2990SX-5.0
IC303	8-759-549-15	s	IC SN74LV245APWR
IC304	8-759-497-38	s	IC LTC1458CG-E2
L300	1-424-641-11	s	COIL, CHOKE 22UH
Q100	8-729-162-45	s	TRANSISTOR 2SB624-BV5
Q102	8-729-140-63	s	TRANSISTOR 2SA1611-M5M6
Q104	8-729-029-14	s	TRANSISTOR DTC144EUA-T106
Q105	8-729-140-63	s	TRANSISTOR 2SA1611-M5M6
Q106	8-729-203-32	s	TRANSISTOR 2SJ106BL
Q107	8-729-205-38	s	TRANSISTOR 2SK208-Y
Q109	8-729-012-35	s	TRANSISTOR 2SK711-BL
R100	1-218-692-11	s	RESISTOR,CHIP 1.0K 1/16W(1608)
R101	1-218-692-11	s	RESISTOR,CHIP 1.0K 1/16W(1608)
R102	1-218-724-11	s	RESISTOR,CHIP 22K 1/16W(1608)
R103	1-218-724-11	s	RESISTOR,CHIP 22K 1/16W(1608)
R104	1-218-700-11	s	RESISTOR,CHIP 2.2K 1/16W(1608)
R105	1-218-716-11	s	RESISTOR,CHIP 10K 1/16W(1608)
R106	1-218-716-11	s	RESISTOR,CHIP 10K 1/16W(1608)
R111	1-218-704-11	s	RESISTOR,CHIP 3.3K 1/16W(1608)
R112	1-218-684-11	s	RESISTOR,CHIP 470 1/16W (1608)
R113	1-218-712-11	s	RESISTOR,METAL 6.8K 1/16W
R114	1-216-853-11	s	RESISTOR,CHIP 470K 1/16W(1608)
R115	1-218-716-11	s	RESISTOR,CHIP 10K 1/16W(1608)
R116	1-218-692-11	s	RESISTOR,CHIP 1.0K 1/16W(1608)
R117	1-218-696-11	s	RESISTOR,CHIP 1.5K 1/16W(1608)
R118	1-218-688-11	s	RESISTOR,CHIP 680 1/16W(1608)
R119	1-218-702-11	s	RESISTOR CHIP 2.7K 1/16W(1608)
R120	1-218-682-11	s	RESISTOR,CHIP 390 1/16W (1608)
R121	1-218-652-11	s	RESISTOR,CHIP 22 1/16W (1608)
R122	1-218-708-11	s	RESISTOR,CHIP 4.7K 1/16W(1608)
R123	1-218-709-11	s	RESISTOR,CHIP 5.1K 1/16W
R124	1-218-709-11	s	RESISTOR,CHIP 5.1K 1/16W
R125	1-218-704-11	s	RESISTOR,CHIP 3.3K 1/16W(1608)
R126	1-218-682-11	s	RESISTOR,CHIP 390 1/16W (1608)
R127	1-218-704-11	s	RESISTOR,CHIP 3.3K 1/16W(1608)
R128	1-218-682-11	s	RESISTOR,CHIP 390 1/16W (1608)
R129	1-216-857-11	s	RESISTOR,CHIP 1M 1/16W(1608)
R130	1-218-692-11	s	RESISTOR,CHIP 1.0K 1/16W(1608)
R131	1-218-692-11	s	RESISTOR,CHIP 1.0K 1/16W(1608)
R132	1-211-998-11	s	RESISTOR, METAL FILM CHIP 4.7K
R133	1-211-998-11	s	RESISTOR, METAL FILM CHIP 4.7K
R134	1-218-692-11	s	RESISTOR,CHIP 1.0K 1/16W(1608)
R136	1-218-692-11	s	RESISTOR,CHIP 1.0K 1/16W(1608)
R137	1-218-726-11	s	RESISTOR CHIP 27K 1/16W (1608)
R138	1-218-726-11	s	RESISTOR CHIP 27K 1/16W (1608)
R139	1-211-998-11	s	RESISTOR, METAL FILM CHIP 4.7K

(CUE-13 BOARD [SUFFIX 11])

Ref. No. or Q'ty	Part No.	SP	Description
R140	1-211-998-11	s	RESISTOR, METAL FILM CHIP 4.7K
R141	1-218-718-11	s	RESISTOR CHIP 12K 1/16W (1608)
R142	1-220-636-11	s	RESISTOR,METAL FILM CHIP 2.7K
R143	1-218-668-11	s	RESISTOR,CHIP 100 1/16W (1608)
R144	1-218-668-11	s	RESISTOR,CHIP 100 1/16W (1608)
R145	1-218-718-11	s	RESISTOR CHIP 12K 1/16W (1608)
R146	1-220-636-11	s	RESISTOR,METAL FILM CHIP 2.7K
R147	1-218-716-11	s	RESISTOR,CHIP 10K 1/16W(1608)
R148	1-218-716-11	s	RESISTOR,CHIP 10K 1/16W(1608)
R149	1-218-708-11	s	RESISTOR,CHIP 4.7K 1/16W(1608)
R151	1-218-732-11	s	RESISTOR,CHIP 47K 1/16W(1608)
R152	1-218-716-11	s	RESISTOR,CHIP 10K 1/16W(1608)
R153	1-218-716-11	s	RESISTOR,CHIP 10K 1/16W(1608)
R154	1-218-716-11	s	RESISTOR,CHIP 10K 1/16W(1608)
R155	1-218-716-11	s	RESISTOR,CHIP 10K 1/16W(1608)
R156	1-218-682-11	s	RESISTOR,CHIP 390 1/16W (1608)
R157	1-218-708-11	s	RESISTOR,CHIP 4.7K 1/16W(1608)
R158	1-218-716-11	s	RESISTOR,CHIP 10K 1/16W(1608)
R161	1-218-732-11	s	RESISTOR,CHIP 47K 1/16W(1608)
R163	1-218-716-11	s	RESISTOR,CHIP 10K 1/16W(1608)
R164	1-218-692-11	s	RESISTOR,CHIP 1.0K 1/16W(1608)
R165	1-218-692-11	s	RESISTOR,CHIP 1.0K 1/16W(1608)
R167	1-218-716-11	s	RESISTOR,CHIP 10K 1/16W(1608)
R168	1-218-716-11	s	RESISTOR,CHIP 10K 1/16W(1608)
R169	1-218-718-11	s	RESISTOR CHIP 12K 1/16W (1608)
R170	1-218-716-11	s	RESISTOR,CHIP 10K 1/16W(1608)
R171	1-218-708-11	s	RESISTOR,CHIP 4.7K 1/16W(1608)
R172	1-218-730-11	s	RESISTOR METAL FILM CHIP 39K
R173	1-218-714-11	s	RESISTOR,CHIP 8.2K 1/16W(1608)
R175	1-218-702-11	s	RESISTOR,CHIP 2.7K 1/16W(1608)
R176	1-218-692-11	s	RESISTOR,CHIP 1.0K 1/16W(1608)
R177	1-218-714-11	s	RESISTOR,CHIP 8.2K 1/16W(1608)
R178	1-218-702-11	s	RESISTOR,CHIP 2.7K 1/16W(1608)
R179	1-218-740-11	s	RESISTOR,CHIP 100K 1/16W(1608)
R180	1-218-744-11	s	RESISTOR,CHIP 150K 1/16W
R182	1-216-864-11	s	RESISTOR,CHIP 0 1/16W (1608)
R183	1-216-857-11	s	RESISTOR,CHIP 1M 1/16W(1608)
R184	1-216-857-11	s	RESISTOR,CHIP 1M 1/16W(1608)
R185	1-216-857-11	s	RESISTOR,CHIP 1M 1/16W(1608)
R186	1-218-752-11	s	RESISTOR,CHIP 330K 1/16W(1608)
R187	1-218-732-11	s	RESISTOR,CHIP 47K 1/16W(1608)
R190	1-218-710-11	s	RESISTOR,CHIP 5.6K 1/16W(1608)
R192	1-218-722-11	s	RESISTOR, CHIP 18K 1/16W 1608
R193	1-218-716-11	s	RESISTOR,CHIP 10K 1/16W(1608)
R194	1-218-714-11	s	RESISTOR,CHIP 8.2K 1/16W(1608)
R195	1-218-748-11	s	RESISTOR,CHIP 220K 1/16W(1608)
R196	1-218-692-11	s	RESISTOR,CHIP 1.0K 1/16W(1608)
R197	1-218-698-11	s	RESISTOR,CHIP 1.8K 1/16W(1608)
R199	1-218-720-11	s	RESISTOR,CHIP 15K 1/16W(1608)
R200	1-218-688-11	s	RESISTOR,CHIP 680 1/16W(1608)
R201	1-218-672-11	s	RESISTOR,CHIP 150 1/16W(1608)
R202	1-218-674-11	s	RESISTOR CHIP 180 1/16W (1608)
R203	1-218-730-11	s	RESISTOR METAL FILM CHIP 39K
R204	1-218-367-11	s	RESISTOR,METAL FILM CHIP 10K
R205	1-218-714-11	s	RESISTOR,CHIP 8.2K 1/16W(1608)
R206	1-218-738-11	s	RESISTOR,CHIP 82K 1/16W(1608)
R207	1-218-367-11	s	RESISTOR,METAL FILM CHIP 10K
R208	1-218-692-11	s	RESISTOR,CHIP 1.0K 1/16W(1608)
R209	1-218-714-11	s	RESISTOR,CHIP 8.2K 1/16W(1608)

(CUE-13 BOARD [SUFFIX 11])

Ref. No. or Q'ty	Part No.	SP	Description
R210	1-218-668-11	s	RESISTOR,CHIP 100 1/16W (1608)
R211	1-211-998-11	s	RESISTOR, METAL FILM CHIP 4.7K
R212	1-211-998-11	s	RESISTOR, METAL FILM CHIP 4.7K
R213	1-211-998-11	s	RESISTOR, METAL FILM CHIP 4.7K
R214	1-211-998-11	s	RESISTOR, METAL FILM CHIP 4.7K
R215	1-218-367-11	s	RESISTOR,METAL FILM CHIP 10K
R216	1-218-367-11	s	RESISTOR,METAL FILM CHIP 10K
R217	1-218-367-11	s	RESISTOR,METAL FILM CHIP 10K
R218	1-218-367-11	s	RESISTOR,METAL FILM CHIP 10K
R219	1-218-692-11	s	RESISTOR,CHIP 1.0K 1/16W(1608)
R220	1-218-660-91	s	RESISTOR,CHIP 47 1/16W (1608)
R221	1-218-740-11	s	RESISTOR,CHIP 100K 1/16W(1608)
R222	1-218-660-91	s	RESISTOR,CHIP 47 1/16W (1608)
R223	1-218-692-11	s	RESISTOR,CHIP 1.0K 1/16W(1608)
R224	1-218-740-11	s	RESISTOR,CHIP 100K 1/16W(1608)
R225	1-218-740-11	s	RESISTOR,CHIP 100K 1/16W(1608)
R226	1-218-740-11	s	RESISTOR,CHIP 100K 1/16W(1608)
R227	1-218-716-11	s	RESISTOR,CHIP 10K 1/16W(1608)
R228	1-218-716-11	s	RESISTOR,CHIP 10K 1/16W(1608)
R229	1-220-242-11	s	RESISTOR, CHIP 22 1/4W (3225)
R230	1-220-242-11	s	RESISTOR, CHIP 22 1/4W (3225)
R231	1-218-692-11	s	RESISTOR,CHIP 1.0K 1/16W(1608)
R232	1-218-716-11	s	RESISTOR,CHIP 10K 1/16W(1608)
R233	1-220-242-11	s	RESISTOR, CHIP 22 1/4W (3225)
R234	1-220-242-11	s	RESISTOR, CHIP 22 1/4W (3225)
R236	1-218-716-11	s	RESISTOR,CHIP 10K 1/16W(1608)
R237	1-218-680-11	s	RESISTOR,CHIP 330 1/16W(1608)
R238	1-218-700-11	s	RESISTOR,CHIP 2.2K 1/16W(1608)
R239	1-218-686-11	s	RESISTOR CHIP 560 1/16W (1608)
R240	1-218-700-11	s	RESISTOR,CHIP 2.2K 1/16W(1608)
R241	1-218-686-11	s	RESISTOR CHIP 560 1/16W (1608)
R242	1-218-700-11	s	RESISTOR,CHIP 2.2K 1/16W(1608)
R243	1-218-716-11	s	RESISTOR,CHIP 10K 1/16W(1608)
R244	1-218-682-11	s	RESISTOR,CHIP 390 1/16W (1608)
R245	1-218-716-11	s	RESISTOR,CHIP 10K 1/16W(1608)
R246	1-218-692-11	s	RESISTOR,CHIP 1.0K 1/16W(1608)
R247	1-218-724-11	s	RESISTOR,CHIP 22K 1/16W(1608)
R248	1-218-738-11	s	RESISTOR,CHIP 82K 1/16W(1608)
R249	1-218-740-11	s	RESISTOR,CHIP 100K 1/16W(1608)
R253	1-218-650-11	s	RESISTOR,CHIP 18 1/16W (1608)
R254	1-218-700-11	s	RESISTOR,CHIP 2.2K 1/16W(1608)
R255	1-218-713-11	s	RESISTOR,METAL 7.5K 1/16W
R300	1-218-716-11	s	RESISTOR,CHIP 10K 1/16W(1608)
R301	1-218-716-11	s	RESISTOR,CHIP 10K 1/16W(1608)
R302	1-218-716-11	s	RESISTOR,CHIP 10K 1/16W(1608)
R303	1-218-684-11	s	RESISTOR,CHIP 470 1/16W (1608)
R304	1-218-692-11	s	RESISTOR,CHIP 1.0K 1/16W(1608)
R305	1-218-692-11	s	RESISTOR,CHIP 1.0K 1/16W(1608)
R306	1-218-660-91	s	RESISTOR,CHIP 47 1/16W (1608)
R307	1-218-680-11	s	RESISTOR,CHIP 330 1/16W(1608)
R308	1-218-668-11	s	RESISTOR,CHIP 100 1/16W (1608)
RV100	1-237-036-11	s	RESISTOR, ADJ,CERMET 10K
RV101	1-237-033-11	s	RESISTOR,ADJ,CERMET 1K
RV102	1-237-033-11	s	RESISTOR,ADJ,CERMET 1K
RV103	1-237-036-11	s	RESISTOR, ADJ,CERMET 10K
RV104	1-237-034-11	s	RESISTOR,ADJ,CERMET 2K
RV105	1-237-036-11	s	RESISTOR, ADJ,CERMET 10K
RV106	1-241-264-11	s	RESISTOR ADJ 10K (CERMET)

(CUE-13 BOARD [SUFFIX 11])

Ref. No. or Q'ty	Part No.	SP	Description
RY100	1-755-379-11	s	RELAY
RY101	1-755-379-11	s	RELAY

CUE-13 BOARD [SUFFIX 12-]

[Lot No. 321 -] HDW-2000, M2000/P, M2100/P, A2100
[Lot No. 4C2 -] HDW-D2000
[Lot No. 462 -] HDW-S2000/P
[Lot No. 434 -] DVW-2000/P, M2000/P
[Lot No. 321 -] MSW-M2000/P, M2100/P
[Lot No. 495 -] MSW-M2000E/P, M2100E/P

Ref. No. or Q'ty	Part No.	SP	Description
1pc	A-8327-129-A	o	MOUNTED CIRCUIT BOARD, CUE-13
1pc	3-629-688-01	o	SHIELD CASE(U),CUE
1pc	3-629-689-01	o	SHIELD CASE(B),CUE
C100	1-128-936-21	s	CAPACITOR,ELECT (NONPOLAR)22MF
C101	1-128-936-21	s	CAPACITOR,ELECT (NONPOLAR)22MF
C102	1-162-927-11	s	CAPACITOR,CERAMIC 100PF/50V CH
C103	1-162-927-11	s	CAPACITOR,CERAMIC 100PF/50V CH
C104	1-127-692-11	s	CAP, CHIP CERAMIC 10MF B 3216
C105	1-127-692-11	s	CAP, CHIP CERAMIC 10MF B 3216
C106	1-107-826-11	s	CAPACITOR,CHIP CERAMIC 0.1MF
C107	1-107-826-11	s	CAPACITOR,CHIP CERAMIC 0.1MF
C109	1-162-927-11	s	CAPACITOR,CERAMIC 100PF/50V CH
C110	1-162-927-11	s	CAPACITOR,CERAMIC 100PF/50V CH
C111	1-162-923-11	s	CAPACITOR,CERAMIC 47PF/50V CH
C112	1-162-927-11	s	CAPACITOR,CERAMIC 100PF/50V CH
C113	1-162-923-11	s	CAPACITOR,CERAMIC 47PF/50V CH
C114	1-115-153-11	s	CAPACITOR,ELECT 4.7MF/16V(BP)
C115	1-162-927-11	s	CAPACITOR,CERAMIC 100PF/50V CH
C116	1-115-153-11	s	CAPACITOR,ELECT 4.7MF/16V(BP)
C117	1-126-399-11	s	CAPACITOR ELECT 10MF/35V(CHIP)
C118	1-126-399-11	s	CAPACITOR ELECT 10MF/35V(CHIP)
C119	1-107-826-11	s	CAPACITOR,CHIP CERAMIC 0.1MF
C120	1-107-826-11	s	CAPACITOR,CHIP CERAMIC 0.1MF
C121	1-115-459-11	s	CAPACITOR,ELECT 47MF/6.3V(BP)
C122	1-115-153-11	s	CAPACITOR,ELECT 4.7MF/16V(BP)
C123	1-162-919-11	s	CAPACITOR,CERAMIC 22PF/50V CH
C124	1-126-399-11	s	CAPACITOR ELECT 10MF/35V(CHIP)
C125	1-126-399-11	s	CAPACITOR ELECT 10MF/35V(CHIP)
C126	1-107-826-11	s	CAPACITOR,CHIP CERAMIC 0.1MF
C127	1-107-823-11	s	CAPACITOR,CERAMIC 0.47MF/16V
C128	1-107-826-11	s	CAPACITOR,CHIP CERAMIC 0.1MF
C130	1-162-919-11	s	CAPACITOR,CERAMIC 22PF/50V CH
C131	1-115-416-11	s	CAPACITOR,CERAMIC 1000PF/25V
C132	1-115-416-11	s	CAPACITOR,CERAMIC 1000PF/25V
C133	1-115-339-11	s	CAPACITOR,CERAMIC 0.1MF/50V
C134	1-162-927-11	s	CAPACITOR,CERAMIC 100PF/50V CH
C135	1-162-919-11	s	CAPACITOR,CERAMIC 22PF/50V CH
C136	1-115-416-11	s	CAPACITOR,CERAMIC 1000PF/25V
C137	1-162-966-11	s	CAPACITOR,CERAMIC 2200PF/50V B
C139	1-115-153-11	s	CAPACITOR,ELECT 4.7MF/16V(BP)
C140	1-162-923-11	s	CAPACITOR,CERAMIC 47PF/50V CH
C141	1-125-889-11	s	CAPACITOR, C.CERAMIC 2.2MF
C142	1-162-927-11	s	CAPACITOR,CERAMIC 100PF/50V CH
C143	1-162-919-11	s	CAPACITOR,CERAMIC 22PF/50V CH
C144	1-162-919-11	s	CAPACITOR,CERAMIC 22PF/50V CH
C145	1-115-153-11	s	CAPACITOR,ELECT 4.7MF/16V(BP)
C146	1-115-153-11	s	CAPACITOR,ELECT 4.7MF/16V(BP)
C147	1-162-919-11	s	CAPACITOR,CERAMIC 22PF/50V CH
C148	1-162-927-11	s	CAPACITOR,CERAMIC 100PF/50V CH
C149	1-162-927-11	s	CAPACITOR,CERAMIC 100PF/50V CH
C150	1-115-153-11	s	CAPACITOR,ELECT 4.7MF/16V(BP)
C151	1-115-153-11	s	CAPACITOR,ELECT 4.7MF/16V(BP)
C152	1-115-416-11	s	CAPACITOR,CERAMIC 1000PF/25V
C153	1-126-391-11	s	CAPACITOR ELECT 47MF/6.3V(105)

(CUE-13 BOARD [SUFFIX 12-])

Ref. No. or Q'ty	Part No.	SP	Description
C154	1-126-399-11	s	CAPACITOR ELECT 10MF/35V(CHIP)
C155	1-126-399-11	s	CAPACITOR ELECT 10MF/35V(CHIP)
C156	1-127-573-11	s	CAPACITOR,CERAMIC 1MFB(2012)
C158	1-107-826-11	s	CAPACITOR,CHIP CERAMIC 0.1MF
C159	1-107-826-11	s	CAPACITOR,CHIP CERAMIC 0.1MF
C160	1-107-826-11	s	CAPACITOR,CHIP CERAMIC 0.1MF
C161	1-107-826-11	s	CAPACITOR,CHIP CERAMIC 0.1MF
C162	1-107-826-11	s	CAPACITOR,CHIP CERAMIC 0.1MF
C163	1-107-826-11	s	CAPACITOR,CHIP CERAMIC 0.1MF
C164	1-107-826-11	s	CAPACITOR,CHIP CERAMIC 0.1MF
C165	1-107-826-11	s	CAPACITOR,CHIP CERAMIC 0.1MF
C166	1-107-826-11	s	CAPACITOR,CHIP CERAMIC 0.1MF
C167	1-107-826-11	s	CAPACITOR,CHIP CERAMIC 0.1MF
C168	1-162-919-11	s	CAPACITOR,CERAMIC 22PF/50V CH
C169	1-162-919-11	s	CAPACITOR,CERAMIC 22PF/50V CH
C170	1-162-919-11	s	CAPACITOR,CERAMIC 22PF/50V CH
C171	1-162-919-11	s	CAPACITOR,CERAMIC 22PF/50V CH
C174	1-162-927-11	s	CAPACITOR,CERAMIC 100PF/50V CH
C175	1-162-927-11	s	CAPACITOR,CERAMIC 100PF/50V CH
C176	1-107-826-11	s	CAPACITOR,CHIP CERAMIC 0.1MF
C177	1-107-826-11	s	CAPACITOR,CHIP CERAMIC 0.1MF
C300	1-107-826-11	s	CAPACITOR,CHIP CERAMIC 0.1MF
C301	1-107-826-11	s	CAPACITOR,CHIP CERAMIC 0.1MF
C302	1-107-826-11	s	CAPACITOR,CHIP CERAMIC 0.1MF
C303	1-107-826-11	s	CAPACITOR,CHIP CERAMIC 0.1MF
C304	1-107-826-11	s	CAPACITOR,CHIP CERAMIC 0.1MF
C305	1-107-826-11	s	CAPACITOR,CHIP CERAMIC 0.1MF
C307	1-107-826-11	s	CAPACITOR,CHIP CERAMIC 0.1MF
C309	1-126-390-11	s	CAPACITOR ELECT 22MF/6.3V(105)
C310	1-126-390-11	s	CAPACITOR ELECT 22MF/6.3V(105)
C311	1-126-399-11	s	CAPACITOR ELECT 10MF/35V(CHIP)
C312	1-126-399-11	s	CAPACITOR ELECT 10MF/35V(CHIP)
C313	1-107-826-11	s	CAPACITOR,CHIP CERAMIC 0.1MF
C314	1-107-826-11	s	CAPACITOR,CHIP CERAMIC 0.1MF
C315	1-126-390-11	s	CAPACITOR ELECT 22MF/6.3V(105)
CN100	1-569-465-11	o	PIN, DIN CONNECTOR (DIP) 48P
D100	8-719-024-81	s	DIODE 1SS300-TE85L
D102	8-719-421-69	s	DIODE MA133
D103	8-719-421-69	s	DIODE MA133
D107	8-719-820-41	s	DIODE 1SS302
D108	8-719-820-41	s	DIODE 1SS302
D109	8-719-820-41	s	DIODE 1SS302
D112	8-719-024-81	s	DIODE 1SS300-TE85L
D113	8-719-421-69	s	DIODE MA133
D114	8-719-421-69	s	DIODE MA133
D115	8-719-820-41	s	DIODE 1SS302
D300	8-719-975-40	s	DIODE RB411D (RECTI)
D301	8-719-975-40	s	DIODE RB411D (RECTI)
IC100	8-759-711-85	s	IC NJM4580E-D
IC101	8-759-112-66	s	IC UPC812G2
IC102	8-759-112-66	s	IC UPC812G2
IC103	8-759-711-85	s	IC NJM4580E-D
IC104	8-759-711-85	s	IC NJM4580E-D
IC105	8-759-596-42	s	IC THAT2181SC-TE2
IC106	8-759-596-42	s	IC THAT2181SC-TE2
IC107	8-759-422-21	s	IC NJM4580VTE2
IC108	8-759-422-21	s	IC NJM4580VTE2
IC109	8-759-422-21	s	IC NJM4580VTE2

(CUE-13 BOARD [SUFFIX 12-])

Ref. No. or Q'ty	Part No.	SP	Description
IC110	8-759-711-85	s	IC NJM4580E-D
IC111	8-759-112-66	s	IC UPC812G2
IC112	8-759-422-21	s	IC NJM4580VTE2
IC113	8-759-711-85	s	IC NJM4580E-D
IC114	8-759-700-96	s	IC NJM5534M
IC115	8-759-700-96	s	IC NJM5534M
IC116	8-759-700-96	s	IC NJM5534M
IC117	8-759-422-21	s	IC NJM4580VTE2
IC118	8-759-700-96	s	IC NJM5534M
IC119	8-759-422-21	s	IC NJM4580VTE2
IC120	8-759-196-96	s	IC TC7SH08FU (TE85R)
IC121	8-759-392-01	s	IC TC7SH86FU (TE85R)
IC300	8-759-533-85	s	IC L88M05T-FA-TL
IC301	8-759-539-89	s	IC LM2990SX-5.0
IC303	8-759-549-15	s	IC SN74LV245APWR
IC304	8-759-497-38	s	IC LTC1458CG-E2
L300	1-416-345-11	s	COIL, CHOKE 22UH
PS300	⚠ 1-533-282-21	s	CIRCUIT PROTECTOR 2A (3225)
PS301	⚠ 1-533-282-21	s	CIRCUIT PROTECTOR 2A (3225)
PS302	⚠ 1-533-282-21	s	CIRCUIT PROTECTOR 2A (3225)
Q100	8-729-162-45	s	TRANSISTOR 2SB624-BV5
Q102	8-729-928-19	s	TRANSISTOR 2SA1774R
Q104	8-729-928-81	s	TRANSISTOR DTC144EE
Q105	8-729-928-19	s	TRANSISTOR 2SA1774R
Q106	8-729-203-32	s	TRANSISTOR 2SJ106BL
Q107	8-729-205-38	s	TRANSISTOR 2SK208-Y
Q108	8-729-159-65	s	TRANSISTOR 2SD596-DV5
Q109	8-729-012-35	s	TRANSISTOR 2SK711-BL
Q110	8-729-928-81	s	TRANSISTOR DTC144EE
R100	1-218-847-11	s	RESISTOR, CHIP 1K 1/10W (1608)
R101	1-218-847-11	s	RESISTOR, CHIP 1K 1/10W (1608)
R102	1-218-879-11	s	RESISTOR,CHIP 22K 1/10W (1608)
R103	1-218-879-11	s	RESISTOR,CHIP 22K 1/10W (1608)
R104	1-218-855-11	s	RESISTOR,CHIP 2.2K 1/10W(1608)
R105	1-245-299-91	s	RESISTOR, CHIP 10K
R106	1-245-299-91	s	RESISTOR, CHIP 10K
R111	1-218-859-11	s	RESISTOR,CHIP 3.3K 1/10W(1608)
R112	1-218-839-11	s	RESISTOR,CHIP 470 1/10W (1608)
R113	1-218-867-11	s	RESISTOR,CHIP 6.8K 1/10W(1608)
R114	1-216-853-11	s	RESISTOR,CHIP 470K 1/16W(1608)
R115	1-218-871-11	s	RESISTOR,CHIP 10K 1/10W (1608)
R116	1-218-847-11	s	RESISTOR, CHIP 1K 1/10W (1608)
R117	1-218-851-11	s	RESISTOR,CHIP 1.5K 1/10W(1608)
R118	1-218-843-11	s	RESISTOR,CHIP 680 1/10W (1608)
R119	1-218-857-11	s	RESISTOR,CHIP 2.7K 1/10W(1608)
R120	1-218-837-11	s	RESISTOR,CHIP 390 1/10W (1608)
R121	1-211-977-11	s	RESISTOR,CHIP 22 1/10W (1608)
R122	1-218-863-11	s	RESISTOR,CHIP 4.7K 1/10W(1608)
R123	1-218-867-11	s	RESISTOR,CHIP 6.8K 1/10W(1608)
R124	1-218-867-11	s	RESISTOR,CHIP 6.8K 1/10W(1608)
R125	1-218-859-11	s	RESISTOR,CHIP 3.3K 1/10W(1608)
R126	1-218-837-11	s	RESISTOR,CHIP 390 1/10W (1608)
R127	1-218-859-11	s	RESISTOR,CHIP 3.3K 1/10W(1608)
R128	1-218-837-11	s	RESISTOR,CHIP 390 1/10W (1608)
R129	1-216-857-11	s	RESISTOR,CHIP 1M 1/10W(1608)
R132	1-245-439-91	s	RESISTOR, CHIP 4700(1608)
R133	1-245-439-91	s	RESISTOR, CHIP 4700(1608)

(CUE-13 BOARD [SUFFIX 12-])

Ref. No. or Q'ty	Part No.	SP	Description
R134	1-218-847-11	s	RESISTOR, CHIP 1K 1/10W (1608)
R136	1-218-847-11	s	RESISTOR, CHIP 1K 1/10W (1608)
R137	1-218-881-11	s	RESISTOR, CHIP 27K 1/10W(1608)
R138	1-218-881-11	s	RESISTOR, CHIP 27K 1/10W(1608)
R139	1-245-439-91	s	RESISTOR, CHIP 4700(1608)
R140	1-245-439-91	s	RESISTOR, CHIP 4700(1608)
R141	1-218-873-11	s	RESISTOR,CHIP 12K 1/10W (1608)
R142	1-245-438-91	s	RESISTOR, CHIP 2700(1608)
R143	1-218-823-11	s	RESISTOR,CHIP 100 1/10W (1608)
R144	1-218-823-11	s	RESISTOR,CHIP 100 1/10W (1608)
R145	1-218-873-11	s	RESISTOR,CHIP 12K 1/10W (1608)
R146	1-245-438-91	s	RESISTOR, CHIP 2700(1608)
R147	1-218-871-11	s	RESISTOR,CHIP 10K 1/10W (1608)
R148	1-218-871-11	s	RESISTOR,CHIP 10K 1/10W (1608)
R149	1-218-863-11	s	RESISTOR,CHIP 4.7K 1/10W(1608)
R151	1-218-887-11	s	RESISTOR,CHIP 47K 1/10W (1608)
R152	1-218-871-11	s	RESISTOR,CHIP 10K 1/10W (1608)
R153	1-218-871-11	s	RESISTOR,CHIP 10K 1/10W (1608)
R154	1-218-871-11	s	RESISTOR,CHIP 10K 1/10W (1608)
R155	1-218-871-11	s	RESISTOR,CHIP 10K 1/10W (1608)
R156	1-218-837-11	s	RESISTOR,CHIP 390 1/10W (1608)
R157	1-218-863-11	s	RESISTOR,CHIP 4.7K 1/10W(1608)
R158	1-218-871-11	s	RESISTOR,CHIP 10K 1/10W (1608)
R161	1-218-887-11	s	RESISTOR,CHIP 47K 1/10W (1608)
R163	1-218-871-11	s	RESISTOR,CHIP 10K 1/10W (1608)
R164	1-218-847-11	s	RESISTOR, CHIP 1K 1/10W (1608)
R165	1-218-847-11	s	RESISTOR, CHIP 1K 1/10W (1608)
R167	1-218-871-11	s	RESISTOR,CHIP 10K 1/10W (1608)
R168	1-218-871-11	s	RESISTOR,CHIP 10K 1/10W (1608)
R169	1-218-873-11	s	RESISTOR,CHIP 12K 1/10W (1608)
R170	1-218-871-11	s	RESISTOR,CHIP 10K 1/10W (1608)
R171	1-218-863-11	s	RESISTOR,CHIP 4.7K 1/10W(1608)
R172	1-218-885-11	s	RESISTOR,CHIP 39K 1/10W (1608)
R173	1-218-869-11	s	RESISTOR,CHIP 8.2K 1/10W(1608)
R175	1-218-857-11	s	RESISTOR,CHIP 2.7K 1/10W(1608)
R176	1-218-847-11	s	RESISTOR, CHIP 1K 1/10W (1608)
R177	1-218-869-11	s	RESISTOR,CHIP 8.2K 1/10W(1608)
R178	1-218-857-11	s	RESISTOR,CHIP 2.7K 1/10W(1608)
R179	1-218-895-11	s	RESISTOR,CHIP 100K 1/10W(1608)
R180	1-218-899-11	s	RESISTOR,CHIP 150K 1/10W(1608)
R182	1-216-864-11	s	CONDUCTOR, CHIP (1608)
R183	1-216-857-11	s	RESISTOR,CHIP 1M 1/10W(1608)
R184	1-216-857-11	s	RESISTOR,CHIP 1M 1/10W(1608)
R185	1-216-857-11	s	RESISTOR,CHIP 1M 1/10W(1608)
R186	1-218-907-11	s	RESISTOR,CHIP 330K 1/10W(1608)
R187	1-218-887-11	s	RESISTOR,CHIP 47K 1/10W (1608)
R190	1-218-865-11	s	RESISTOR,CHIP 5.6K 1/10W(1608)
R192	1-218-877-11	s	RESISTOR,CHIP 18K 1/10W (1608)
R193	1-218-871-11	s	RESISTOR,CHIP 10K 1/10W (1608)
R194	1-218-869-11	s	RESISTOR,CHIP 8.2K 1/10W(1608)
R195	1-218-903-11	s	RESISTOR,CHIP 220K 1/10W(1608)
R196	1-218-847-11	s	RESISTOR, CHIP 1K 1/10W (1608)
R197	1-218-853-11	s	RESISTOR,CHIP 1.8K 1/10W(1608)
R199	1-218-875-11	s	RESISTOR,CHIP 15K 1/10W (1608)
R200	1-218-843-11	s	RESISTOR,CHIP 680 1/10W (1608)
R201	1-218-827-11	s	RESISTOR,CHIP 150 1/10W (1608)
R202	1-218-829-11	s	RESISTOR,CHIP 180 1/10W (1608)
R203	1-218-885-11	s	RESISTOR,CHIP 39K 1/10W (1608)
R204	1-245-299-91	s	RESISTOR, CHIP 10K

(CUE-13 BOARD [SUFFIX 12-])

Ref. No. or Q'ty	Part No.	SP	Description
R205	1-218-869-11	s	RESISTOR,CHIP 8.2K 1/10W(1608)
R206	1-218-893-11	s	RESISTOR, CHIP 82K 1/10W(1608)
R207	1-245-299-91	s	RESISTOR, CHIP 10K
R208	1-218-847-11	s	RESISTOR, CHIP 1K 1/10W (1608)
R209	1-218-869-11	s	RESISTOR,CHIP 8.2K 1/10W(1608)
R210	1-218-823-11	s	RESISTOR,CHIP 100 1/10W (1608)
R211	1-245-439-91	s	RESISTOR, CHIP 4700(1608)
R212	1-245-439-91	s	RESISTOR, CHIP 4700(1608)
R213	1-245-439-91	s	RESISTOR, CHIP 4700(1608)
R214	1-245-439-91	s	RESISTOR, CHIP 4700(1608)
R215	1-245-299-91	s	RESISTOR, CHIP 10K
R216	1-245-299-91	s	RESISTOR, CHIP 10K
R217	1-245-299-91	s	RESISTOR, CHIP 10K
R218	1-245-299-91	s	RESISTOR, CHIP 10K
R219	1-218-847-11	s	RESISTOR, CHIP 1K 1/10W (1608)
R220	1-211-985-11	s	RESISTOR,CHIP 47 1/10W (1608)
R221	1-218-895-11	s	RESISTOR,CHIP 100K 1/10W(1608)
R222	1-211-985-11	s	RESISTOR,CHIP 47 1/10W (1608)
R223	1-218-847-11	s	RESISTOR, CHIP 1K 1/10W (1608)
R224	1-218-895-11	s	RESISTOR,CHIP 100K 1/10W(1608)
R225	1-218-895-11	s	RESISTOR,CHIP 100K 1/10W(1608)
R226	1-218-895-11	s	RESISTOR,CHIP 100K 1/10W(1608)
R227	1-218-871-11	s	RESISTOR,CHIP 10K 1/10W (1608)
R228	1-218-871-11	s	RESISTOR,CHIP 10K 1/10W (1608)
R229	1-219-493-11	s	RESISTOR, METAL FILM CHIP 22
R230	1-219-493-11	s	RESISTOR, METAL FILM CHIP 22
R231	1-218-847-11	s	RESISTOR, CHIP 1K 1/10W (1608)
R232	1-218-871-11	s	RESISTOR,CHIP 10K 1/10W (1608)
R233	1-219-493-11	s	RESISTOR, METAL FILM CHIP 22
R234	1-219-493-11	s	RESISTOR, METAL FILM CHIP 22
R236	1-218-871-11	s	RESISTOR,CHIP 10K 1/10W (1608)
R237	1-218-835-11	s	RESISTOR,CHIP 330 1/10W (1608)
R238	1-218-855-11	s	RESISTOR,CHIP 2.2K 1/10W(1608)
R239	1-218-841-11	s	RESISTOR,CHIP 560 1/10W (1608)
R240	1-218-839-11	s	RESISTOR,CHIP 470 1/10W (1608)
R241	1-218-841-11	s	RESISTOR,CHIP 560 1/10W (1608)
R242	1-218-839-11	s	RESISTOR,CHIP 470 1/10W (1608)
R243	1-218-871-11	s	RESISTOR,CHIP 10K 1/10W (1608)
R244	1-218-837-11	s	RESISTOR,CHIP 390 1/10W (1608)
R245	1-218-871-11	s	RESISTOR,CHIP 10K 1/10W (1608)
R246	1-218-847-11	s	RESISTOR, CHIP 1K 1/10W (1608)
R247	1-218-879-11	s	RESISTOR,CHIP 22K 1/10W (1608)
R248	1-218-893-11	s	RESISTOR, CHIP 82K 1/10W(1608)
R249	1-218-895-11	s	RESISTOR,CHIP 100K 1/10W(1608)
R253	1-211-981-11	s	RESISTOR,CHIP 33 1/10W (1608)
R254	1-218-861-11	s	RESISTOR,CHIP 3.9K 1/10W(1608)
R255	1-218-873-11	s	RESISTOR,CHIP 12K 1/10W (1608)
R256	1-218-847-11	s	RESISTOR, CHIP 1K 1/10W (1608)
R257	1-218-907-11	s	RESISTOR,CHIP 330K 1/10W(1608)
R258	1-245-437-91	s	RESISTOR, CHIP 100(1608)
R259	1-245-437-91	s	RESISTOR, CHIP 100(1608)
R260	1-218-871-11	s	RESISTOR,CHIP 10K 1/10W (1608)
R261	1-218-871-11	s	RESISTOR,CHIP 10K 1/10W (1608)
R263	1-218-855-11	s	RESISTOR,CHIP 2.2K 1/10W(1608)
R264	1-218-855-11	s	RESISTOR,CHIP 2.2K 1/10W(1608)
R266	1-218-871-11	s	RESISTOR,CHIP 10K 1/10W (1608)
R267	1-218-847-11	s	RESISTOR, CHIP 1K 1/10W (1608)
R300	1-218-871-11	s	RESISTOR,CHIP 10K 1/10W (1608)
R301	1-218-871-11	s	RESISTOR,CHIP 10K 1/10W (1608)

(CUE-13 BOARD [SUFFIX 12-])

Ref. No. or Q'ty	Part No.	SP	Description
R302	1-218-871-11	s	RESISTOR,CHIP 10K 1/10W (1608)
R303	1-218-839-11	s	RESISTOR,CHIP 470 1/10W (1608)
R304	1-218-847-11	s	RESISTOR, CHIP 1K 1/10W (1608)
R305	1-218-847-11	s	RESISTOR, CHIP 1K 1/10W (1608)
R306	1-211-985-11	s	RESISTOR,CHIP 47 1/10W (1608)
R307	1-218-835-11	s	RESISTOR,CHIP 330 1/10W (1608)
R308	1-218-823-11	s	RESISTOR,CHIP 100 1/10W (1608)
RV100	1-225-792-21	s	RES, ADJ, CERMET 10K
RV101	1-225-788-21	s	RES, ADJ, CERMET 1K
RV102	1-225-788-21	s	RES, ADJ, CERMET 1K
RV103	1-225-792-21	s	RES, ADJ, CERMET 10K
RV104	1-225-789-21	s	RES, ADJ, CERMET 2K
RV105	1-225-792-21	s	RES, ADJ, CERMET 10K
RV106	1-241-262-11	s	RESISTOR ADJ 2K (CERMET)
RV107	1-225-789-21	s	RES, ADJ, CERMET 2K
RV108	1-225-787-21	s	RES, ADJ, CERMET 500
RY100	1-755-379-11	s	RELAY
RY101	1-755-379-11	s	RELAY
S100	1-692-270-41	s	SWITCH, SLIDE
S101	1-692-270-41	s	SWITCH, SLIDE
THP100	1-810-106-11	s	THERMISTOR, POSITIVE LINEAR
THP101	1-810-106-11	s	THERMISTOR, POSITIVE LINEAR
THP300	1-810-106-11	s	THERMISTOR, POSITIVE LINEAR

DIF-134 BOARD for HKDW-102

---

*1: [Board No. suffix 12 -]
*2: [Board No. suffix 13 -]

Ref. No. or Q'ty	Part No.	SP	Description
C100	1-125-889-11	s	CAPACITOR, CERAMIC 2.2MF
C101	1-107-826-11	s	CAPACITOR,CHIP CERAMIC 0.1MF
C102	1-107-826-11	s	CAPACITOR,CHIP CERAMIC 0.1MF
C103	1-127-692-11	s	CAP, CHIP CERAMIC 10MF B 3216
C104	1-107-826-11	s	CAPACITOR,CHIP CERAMIC 0.1MF
C105	1-107-826-11	s	CAPACITOR,CHIP CERAMIC 0.1MF
C106	1-107-826-11	s	CAPACITOR,CHIP CERAMIC 0.1MF
C107	1-162-905-11	s	CAPACITOR,CERAMIC 1PF/50V (CK)
C108	1-127-692-11	s	CAP, CHIP CERAMIC 10MF B 3216
C109	1-107-826-11	s	CAPACITOR,CHIP CERAMIC 0.1MF
C110	1-107-826-11	s	CAPACITOR,CHIP CERAMIC 0.1MF
C111	1-107-826-11	s	CAPACITOR,CHIP CERAMIC 0.1MF
C112 *2	1-125-837-91	s	CAPACITOR,CHIP CERAMIC1MF/6.3V
*1	1-125-837-11	s	CAPACITOR,CHIP CERAMIC1MF/6.3V
C113	1-107-826-11	s	CAPACITOR,CHIP CERAMIC 0.1MF
C114	1-162-923-11	s	CAPACITOR,CERAMIC 47PF/50V CH
C115	1-107-826-11	s	CAPACITOR,CHIP CERAMIC 0.1MF
C116	1-107-826-11	s	CAPACITOR,CHIP CERAMIC 0.1MF
C117	1-107-826-11	s	CAPACITOR,CHIP CERAMIC 0.1MF
C118	1-162-915-11	s	CAPACITOR,CERAMIC 10PF/50V CH
C119 *2	1-127-692-11	s	CAP, CHIP CERAMIC 10MF B 3216
*1	1-137-739-11	s	CAPACITOR, TANTALUM ELECT
C120	1-107-826-11	s	CAPACITOR,CHIP CERAMIC 0.1MF
C121	1-107-826-11	s	CAPACITOR,CHIP CERAMIC 0.1MF
C122	1-107-826-11	s	CAPACITOR,CHIP CERAMIC 0.1MF
C123	1-107-826-11	s	CAPACITOR,CHIP CERAMIC 0.1MF
C124	1-107-826-11	s	CAPACITOR,CHIP CERAMIC 0.1MF
C125	1-107-826-11	s	CAPACITOR,CHIP CERAMIC 0.1MF
C126 *2	1-127-692-11	s	CAP, CHIP CERAMIC 10MF B 3216
*1	1-137-739-11	s	CAPACITOR, TANTALUM ELECT
C127	1-107-826-11	s	CAPACITOR,CHIP CERAMIC 0.1MF
C128	1-107-826-11	s	CAPACITOR,CHIP CERAMIC 0.1MF
C129 *2	1-127-692-11	s	CAP, CHIP CERAMIC 10MF B 3216
*1	1-137-739-11	s	CAPACITOR, TANTALUM ELECT
C130	1-107-826-11	s	CAPACITOR,CHIP CERAMIC 0.1MF
C131	1-107-826-11	s	CAPACITOR,CHIP CERAMIC 0.1MF
C132	1-107-826-11	s	CAPACITOR,CHIP CERAMIC 0.1MF
C133	1-107-826-11	s	CAPACITOR,CHIP CERAMIC 0.1MF
C134	1-107-826-11	s	CAPACITOR,CHIP CERAMIC 0.1MF
C135	1-107-826-11	s	CAPACITOR,CHIP CERAMIC 0.1MF
C136 *2	1-135-342-11	s	CAPACITOR,SOLID ELECT 56MF
*1	1-131-603-11	s	CAP, POLYPYRROLE 100MF
C137	1-107-826-11	s	CAPACITOR,CHIP CERAMIC 0.1MF
C138	1-107-826-11	s	CAPACITOR,CHIP CERAMIC 0.1MF
C139	1-107-826-11	s	CAPACITOR,CHIP CERAMIC 0.1MF
C140	1-107-826-11	s	CAPACITOR,CHIP CERAMIC 0.1MF
C141	1-107-826-11	s	CAPACITOR,CHIP CERAMIC 0.1MF
C142	1-107-826-11	s	CAPACITOR,CHIP CERAMIC 0.1MF
C144	1-107-826-11	s	CAPACITOR,CHIP CERAMIC 0.1MF
C145	1-107-826-11	s	CAPACITOR,CHIP CERAMIC 0.1MF
C146	1-162-907-11	s	CAPACITOR,CERAMIC 2PF/50V(CK)
C147	1-127-760-11	s	CAPACITOR,CERAMIC 4.7MF/6.3V
C148 *2	1-127-692-11	s	CAP, CHIP CERAMIC 10MF B 3216
C200	1-107-826-11	s	CAPACITOR,CHIP CERAMIC 0.1MF
C202	1-107-826-11	s	CAPACITOR,CHIP CERAMIC 0.1MF
C203	1-127-692-11	s	CAP, CHIP CERAMIC 10MF B 3216
C204	1-107-826-11	s	CAPACITOR,CHIP CERAMIC 0.1MF

(DIF-134 BOARD for HKDW-102)

Ref. No. or Q'ty	Part No.	SP	Description
C205	1-107-826-11	s	CAPACITOR,CHIP CERAMIC 0.1MF
C206 *2	1-127-692-11	s	CAP, CHIP CERAMIC 10MF B 3216
*1	1-137-739-11	s	CAPACITOR, TANTALUM ELECT
C207	1-107-826-11	s	CAPACITOR,CHIP CERAMIC 0.1MF
C208	1-107-826-11	s	CAPACITOR,CHIP CERAMIC 0.1MF
C209	1-107-826-11	s	CAPACITOR,CHIP CERAMIC 0.1MF
C210	1-107-826-11	s	CAPACITOR,CHIP CERAMIC 0.1MF
C211	1-107-826-11	s	CAPACITOR,CHIP CERAMIC 0.1MF
C212	1-107-826-11	s	CAPACITOR,CHIP CERAMIC 0.1MF
C213	1-107-826-11	s	CAPACITOR,CHIP CERAMIC 0.1MF
C214	1-162-915-11	s	CAPACITOR,CERAMIC 10PF/50V CH
C215	1-107-826-11	s	CAPACITOR,CHIP CERAMIC 0.1MF
C216	1-107-826-11	s	CAPACITOR,CHIP CERAMIC 0.1MF
C217	1-107-826-11	s	CAPACITOR,CHIP CERAMIC 0.1MF
C218	1-107-826-11	s	CAPACITOR,CHIP CERAMIC 0.1MF
C219	1-107-826-11	s	CAPACITOR,CHIP CERAMIC 0.1MF
C220 *2	1-135-342-11	s	CAPACITOR,SOLID ELECT 56MF
*1	1-131-603-11	s	CAP, POLYPYRROLE 100MF
C221	1-107-826-11	s	CAPACITOR,CHIP CERAMIC 0.1MF
C222	1-107-826-11	s	CAPACITOR,CHIP CERAMIC 0.1MF
C223	1-107-826-11	s	CAPACITOR,CHIP CERAMIC 0.1MF
C224	1-162-911-11	s	CAPACITOR,CERAMIC 6PF/50V 1608
C225	1-107-826-11	s	CAPACITOR,CHIP CERAMIC 0.1MF
C226	1-107-826-11	s	CAPACITOR,CHIP CERAMIC 0.1MF
C227	1-107-826-11	s	CAPACITOR,CHIP CERAMIC 0.1MF
C228	1-107-826-11	s	CAPACITOR,CHIP CERAMIC 0.1MF
C229	1-107-826-11	s	CAPACITOR,CHIP CERAMIC 0.1MF
C230	1-107-826-11	s	CAPACITOR,CHIP CERAMIC 0.1MF
C231	1-107-826-11	s	CAPACITOR,CHIP CERAMIC 0.1MF
C232	1-107-826-11	s	CAPACITOR,CHIP CERAMIC 0.1MF
C233	1-107-826-11	s	CAPACITOR,CHIP CERAMIC 0.1MF
C234	1-107-826-11	s	CAPACITOR,CHIP CERAMIC 0.1MF
C235	1-127-760-11	s	CAPACITOR,CERAMIC 4.7MF/6.3V
C237	1-107-826-11	s	CAPACITOR,CHIP CERAMIC 0.1MF
C238	1-162-907-11	s	CAPACITOR,CERAMIC 2PF/50V(CK)
C239	1-162-907-11	s	CAPACITOR,CERAMIC 2PF/50V(CK)
C240	1-107-826-11	s	CAPACITOR,CHIP CERAMIC 0.1MF
C241	1-107-826-11	s	CAPACITOR,CHIP CERAMIC 0.1MF
C242	1-164-230-11	s	CAPACITOR,CERAMIC 220PF/50V
C243	1-164-230-11	s	CAPACITOR,CERAMIC 220PF/50V
C244	1-125-889-11	s	CAPACITOR, CERAMIC 2.2MF
C245	1-125-889-11	s	CAPACITOR, CERAMIC 2.2MF
C246	1-107-826-11	s	CAPACITOR,CHIP CERAMIC 0.1MF
C247	1-107-826-11	s	CAPACITOR,CHIP CERAMIC 0.1MF
C248	1-107-826-11	s	CAPACITOR,CHIP CERAMIC 0.1MF
C249	1-127-692-11	s	CAP, CHIP CERAMIC 10MF B 3216
C301	1-107-826-11	s	CAPACITOR,CHIP CERAMIC 0.1MF
C302	1-107-826-11	s	CAPACITOR,CHIP CERAMIC 0.1MF
C303	1-107-826-11	s	CAPACITOR,CHIP CERAMIC 0.1MF
C304	1-107-826-11	s	CAPACITOR,CHIP CERAMIC 0.1MF
C305	1-107-826-11	s	CAPACITOR,CHIP CERAMIC 0.1MF
C306	1-107-826-11	s	CAPACITOR,CHIP CERAMIC 0.1MF
C307	1-107-826-11	s	CAPACITOR,CHIP CERAMIC 0.1MF
C308	1-107-826-11	s	CAPACITOR,CHIP CERAMIC 0.1MF
C309	1-107-826-11	s	CAPACITOR,CHIP CERAMIC 0.1MF
C310	1-107-826-11	s	CAPACITOR,CHIP CERAMIC 0.1MF
C311	1-107-826-11	s	CAPACITOR,CHIP CERAMIC 0.1MF
C312	1-107-826-11	s	CAPACITOR,CHIP CERAMIC 0.1MF
C313	1-107-826-11	s	CAPACITOR,CHIP CERAMIC 0.1MF

(DIF-134 BOARD for HKDW-102)

Ref. No. or Q'ty	Part No.	SP	Description
C314	1-107-826-11	s	CAPACITOR,CHIP CERAMIC 0.1MF
C315	1-107-826-11	s	CAPACITOR,CHIP CERAMIC 0.1MF
C316	1-107-826-11	s	CAPACITOR,CHIP CERAMIC 0.1MF
C317	1-107-826-11	s	CAPACITOR,CHIP CERAMIC 0.1MF
C318	1-107-826-11	s	CAPACITOR,CHIP CERAMIC 0.1MF
C319	1-127-692-11	s	CAP, CHIP CERAMIC 10MF B 3216
C320	1-107-826-11	s	CAPACITOR,CHIP CERAMIC 0.1MF
C321	1-127-692-11	s	CAP, CHIP CERAMIC 10MF B 3216
C322	1-107-826-11	s	CAPACITOR,CHIP CERAMIC 0.1MF
C323	1-107-826-11	s	CAPACITOR,CHIP CERAMIC 0.1MF
C324	1-107-826-11	s	CAPACITOR,CHIP CERAMIC 0.1MF
C325	1-107-826-11	s	CAPACITOR,CHIP CERAMIC 0.1MF
C326	1-107-826-11	s	CAPACITOR,CHIP CERAMIC 0.1MF
C327	1-107-826-11	s	CAPACITOR,CHIP CERAMIC 0.1MF
C328	1-107-826-11	s	CAPACITOR,CHIP CERAMIC 0.1MF
C329	1-107-826-11	s	CAPACITOR,CHIP CERAMIC 0.1MF
C330	1-107-826-11	s	CAPACITOR,CHIP CERAMIC 0.1MF
C331	1-107-826-11	s	CAPACITOR,CHIP CERAMIC 0.1MF
C332	1-107-826-11	s	CAPACITOR,CHIP CERAMIC 0.1MF
C333	1-107-826-11	s	CAPACITOR,CHIP CERAMIC 0.1MF
C334	1-107-826-11	s	CAPACITOR,CHIP CERAMIC 0.1MF
C335	1-107-826-11	s	CAPACITOR,CHIP CERAMIC 0.1MF
C336	1-107-826-11	s	CAPACITOR,CHIP CERAMIC 0.1MF
C337	1-107-826-11	s	CAPACITOR,CHIP CERAMIC 0.1MF
C338	1-107-826-11	s	CAPACITOR,CHIP CERAMIC 0.1MF
C343	1-162-927-11	s	CAPACITOR,CERAMIC 100PF/50V CH
C344	1-162-927-11	s	CAPACITOR,CERAMIC 100PF/50V CH
C345	1-162-927-11	s	CAPACITOR,CERAMIC 100PF/50V CH
C400	1-107-826-11	s	CAPACITOR,CHIP CERAMIC 0.1MF
C401	1-107-826-11	s	CAPACITOR,CHIP CERAMIC 0.1MF
C402	1-107-826-11	s	CAPACITOR,CHIP CERAMIC 0.1MF
C403	1-107-826-11	s	CAPACITOR,CHIP CERAMIC 0.1MF
C404	1-127-692-11	s	CAP, CHIP CERAMIC 10MF B 3216
C405	1-127-692-11	s	CAP, CHIP CERAMIC 10MF B 3216
C406	1-107-826-11	s	CAPACITOR,CHIP CERAMIC 0.1MF
C407	1-107-826-11	s	CAPACITOR,CHIP CERAMIC 0.1MF
C408	1-107-826-11	s	CAPACITOR,CHIP CERAMIC 0.1MF
C409	1-107-826-11	s	CAPACITOR,CHIP CERAMIC 0.1MF
C410	1-107-826-11	s	CAPACITOR,CHIP CERAMIC 0.1MF
C411	1-107-826-11	s	CAPACITOR,CHIP CERAMIC 0.1MF
C412	1-107-826-11	s	CAPACITOR,CHIP CERAMIC 0.1MF
C413	1-107-826-11	s	CAPACITOR,CHIP CERAMIC 0.1MF
C414	1-107-826-11	s	CAPACITOR,CHIP CERAMIC 0.1MF
C415	1-107-826-11	s	CAPACITOR,CHIP CERAMIC 0.1MF
C416	1-107-826-11	s	CAPACITOR,CHIP CERAMIC 0.1MF
C417	1-107-826-11	s	CAPACITOR,CHIP CERAMIC 0.1MF
C418	1-107-826-11	s	CAPACITOR,CHIP CERAMIC 0.1MF
C419	1-107-826-11	s	CAPACITOR,CHIP CERAMIC 0.1MF
C420	1-107-826-11	s	CAPACITOR,CHIP CERAMIC 0.1MF
C421	1-107-826-11	s	CAPACITOR,CHIP CERAMIC 0.1MF
C422	1-107-826-11	s	CAPACITOR,CHIP CERAMIC 0.1MF
C600	1-107-826-11	s	CAPACITOR,CHIP CERAMIC 0.1MF
C601	1-107-826-11	s	CAPACITOR,CHIP CERAMIC 0.1MF
C602	1-107-826-11	s	CAPACITOR,CHIP CERAMIC 0.1MF
C603	1-107-826-11	s	CAPACITOR,CHIP CERAMIC 0.1MF
C604	1-107-826-11	s	CAPACITOR,CHIP CERAMIC 0.1MF
C605	1-162-927-11	s	CAPACITOR,CERAMIC 100PF/50V CH
C606	1-162-927-11	s	CAPACITOR,CERAMIC 100PF/50V CH
C607	1-107-826-11	s	CAPACITOR,CHIP CERAMIC 0.1MF

(DIF-134 BOARD for HKDW-102)

Ref. No. or Q'ty	Part No.	SP	Description
C608	1-107-826-11	s	CAPACITOR,CHIP CERAMIC 0.1MF
C609	1-107-826-11	s	CAPACITOR,CHIP CERAMIC 0.1MF
C610	1-107-826-11	s	CAPACITOR,CHIP CERAMIC 0.1MF
C612	1-107-826-11	s	CAPACITOR,CHIP CERAMIC 0.1MF
C613	1-107-826-11	s	CAPACITOR,CHIP CERAMIC 0.1MF
C614	1-107-826-11	s	CAPACITOR,CHIP CERAMIC 0.1MF
C615	1-107-826-11	s	CAPACITOR,CHIP CERAMIC 0.1MF
C616	1-107-826-11	s	CAPACITOR,CHIP CERAMIC 0.1MF
C617	1-107-826-11	s	CAPACITOR,CHIP CERAMIC 0.1MF
C618	1-107-826-11	s	CAPACITOR,CHIP CERAMIC 0.1MF
C619	1-107-826-11	s	CAPACITOR,CHIP CERAMIC 0.1MF
C620	1-107-826-11	s	CAPACITOR,CHIP CERAMIC 0.1MF
C700	1-162-927-11	s	CAPACITOR,CERAMIC 100PF/50V CH
C701	1-107-826-11	s	CAPACITOR,CHIP CERAMIC 0.1MF
C702	1-107-826-11	s	CAPACITOR,CHIP CERAMIC 0.1MF
C703	1-107-826-11	s	CAPACITOR,CHIP CERAMIC 0.1MF
C704	1-107-826-11	s	CAPACITOR,CHIP CERAMIC 0.1MF
C705 *2	1-107-826-11	s	CAPACITOR,CHIP CERAMIC 0.1MF
C713	1-107-826-11	s	CAPACITOR,CHIP CERAMIC 0.1MF
C714	1-107-826-11	s	CAPACITOR,CHIP CERAMIC 0.1MF
C715	1-107-826-11	s	CAPACITOR,CHIP CERAMIC 0.1MF
C716 *2	1-135-342-11	s	CAPACITOR,SOLID ELECT 56MF
*1	1-127-708-11	s	CAP, POLYPYRROLE 100MF
C717 *2	1-135-342-11	s	CAPACITOR,SOLID ELECT 56MF
*1	1-127-708-11	s	CAP, POLYPYRROLE 100MF
C718 *2	1-135-342-11	s	CAPACITOR,SOLID ELECT 56MF
*1	1-131-603-11	s	CAP, POLYPYRROLE 100MF
C722	1-107-826-11	s	CAPACITOR,CHIP CERAMIC 0.1MF
C723	1-107-826-11	s	CAPACITOR,CHIP CERAMIC 0.1MF
C724	1-107-826-11	s	CAPACITOR,CHIP CERAMIC 0.1MF
C725 *2	1-135-342-11	s	CAPACITOR,SOLID ELECT 56MF
*1	1-127-708-11	s	CAP, POLYPYRROLE 100MF
C726 *2	1-135-342-11	s	CAPACITOR,SOLID ELECT 56MF
*1	1-127-708-11	s	CAP, POLYPYRROLE 100MF
C727 *2	1-135-342-11	s	CAPACITOR,SOLID ELECT 56MF
*1	1-131-603-11	s	CAP, POLYPYRROLE 100MF
C730	1-125-889-11	s	CAPACITOR, CERAMIC 2.2MF
C731	1-127-692-11	s	CAP, CHIP CERAMIC 10MF B 3216
C750	1-107-826-11	s	CAPACITOR,CHIP CERAMIC 0.1MF
CN100	1-764-243-11	o	CONNECTOR (COAXIAL)
CN101	1-764-243-11	o	CONNECTOR (COAXIAL)
CN200	1-764-243-11	o	CONNECTOR (COAXIAL)
CN201	1-764-243-11	o	CONNECTOR (COAXIAL)
CN400 *2	1-580-789-91	s	PIN, CONNECTOR 6P
*1	1-580-789-21	o	PIN,CONNECTOR (SMD) 6P
D200	8-719-941-04	s	DIODE SB007-03CP
D201	8-719-941-04	s	DIODE SB007-03CP
D202	8-719-941-04	s	DIODE SB007-03CP
D203	8-719-941-04	s	DIODE SB007-03CP
E100	1-535-877-22	s	CHIP,CHECKER (TEST POINT)
E200	1-535-877-22	s	CHIP,CHECKER (TEST POINT)
E600	1-535-877-22	s	CHIP,CHECKER (TEST POINT)
E700	1-535-877-22	s	CHIP,CHECKER (TEST POINT)
FB100	1-414-864-11	s	INDUCTOR, MICRO (CHIP TYPE)
FB101	1-414-864-11	s	INDUCTOR, MICRO (CHIP TYPE)
FB102	1-414-864-11	s	INDUCTOR, MICRO (CHIP TYPE)
FB103	1-414-864-11	s	INDUCTOR, MICRO (CHIP TYPE)
FB104	1-414-864-11	s	INDUCTOR, MICRO (CHIP TYPE)
FB105	1-414-864-11	s	INDUCTOR, MICRO (CHIP TYPE)

(DIF-134 BOARD for HKDW-102)

Ref. No. or Q'ty	Part No.	SP	Description
FB106	1-414-864-11	s	INDUCTOR, MICRO (CHIP TYPE)
FB107	1-414-864-11	s	INDUCTOR, MICRO (CHIP TYPE)
FB108	1-414-864-11	s	INDUCTOR, MICRO (CHIP TYPE)
FB200	1-414-864-11	s	INDUCTOR, MICRO (CHIP TYPE)
FB201	1-414-864-11	s	INDUCTOR, MICRO (CHIP TYPE)
FB202	1-414-864-11	s	INDUCTOR, MICRO (CHIP TYPE)
FB203	1-414-864-11	s	INDUCTOR, MICRO (CHIP TYPE)
FL700	1-233-893-21	s	FILTER, CHIP EMI
FL701	1-233-893-21	s	FILTER, CHIP EMI
FL702	1-233-893-21	s	FILTER, CHIP EMI
IC100	8-759-460-72	s	IC BA033FP
IC101 *2	8-759-672-76	s	IC AK9813BF-E2
*1	8-759-251-40	s	IC MB88E346PFV-G-BND-ER
IC102	8-752-078-34	s	IC CXB1342R
IC103	8-759-490-41	s	IC TC74VHCT541AFT(EL)
IC104	8-759-490-41	s	IC TC74VHCT541AFT(EL)
IC105	8-759-337-40	s	IC NJM2904V(TE2)
IC200	8-752-078-32	s	IC CXB1341R
IC201	8-759-392-01	s	IC TC7SH86FU (TE85R)
IC203	8-759-523-95	s	IC TC74VHC74FT(EL)
IC204	8-759-392-01	s	IC TC7SH86FU (TE85R)
IC205	8-759-491-46	s	IC TC74VHCT04AFT (EL)
IC206	8-759-523-95	s	IC TC74VHC74FT(EL)
IC301	6-702-238-11	s	IC HY57V643220CT-7TR
IC401	6-702-238-11	s	IC HY57V643220CT-7TR
IC402	8-759-549-01	s	IC SN74LV125APWR
IC403 *2	6-704-718-01	s	IC XC18V02VQG44C
*1	6-700-750-01	s	IC XC18V01PC20C
IC404	6-702-238-11	s	IC HY57V643220CT-7TR
IC405	8-759-698-19	s	IC XC61CN2702MR
IC600	8-759-549-15	s	IC SN74LV245APWR
IC601	8-759-490-41	s	IC TC74VHCT541AFT(EL)
IC602	8-759-549-01	s	IC SN74LV125APWR
IC603	8-759-196-96	s	IC TC7SH08FU (TE85R)
IC604	8-759-549-15	s	IC SN74LV245APWR
IC605	8-759-549-15	s	IC SN74LV245APWR
IC606	8-759-549-15	s	IC SN74LV245APWR
IC607	8-759-549-15	s	IC SN74LV245APWR
IC609	8-759-271-86	s	IC TC7SH04FU
IC610	8-759-549-15	s	IC SN74LV245APWR
IC611	8-759-549-15	s	IC SN74LV245APWR
IC612	8-759-549-15	s	IC SN74LV245APWR
IC613	8-759-549-15	s	IC SN74LV245APWR
IC614	8-759-549-15	s	IC SN74LV245APWR
IC615 *2	8-759-651-59	s	IC SN74CBTLV3245APWR
*1	8-759-549-15	s	IC SN74LV245APWR
IC616 *2	8-759-651-59	s	IC SN74CBTLV3245APWR
*1	8-759-549-15	s	IC SN74LV245APWR
IC617	8-759-549-15	s	IC SN74LV245APWR
IC622	8-759-196-96	s	IC TC7SH08FU (TE85R)
IC700 *2	8-759-592-44	s	IC TC7SZ04FU(TE85R)
IC702	8-759-392-77	s	IC SN74LVC245APW (E20)
IC703	8-759-523-94	s	IC TC74VHC32FT(EL)
IC704	8-759-392-77	s	IC SN74LVC245APW (E20)
IC712	8-759-597-64	s	IC RN5RF50AA-TR
IC750	8-759-392-77	s	IC SN74LVC245APW (E20)
IC751	8-759-592-44	s	IC TC7SZ04FU(TE85R)
IS403 *2	deleted		
*1	1-251-093-11	s	SOCKET,IC

(DIF-134 BOARD for HKDW-102)

Ref. No. or Q'ty	Part No.	SP	Description
L100 *2	1-414-465-31	s	INDUCTOR, CHIP (J) 15NH
*1	1-410-797-11	s	CHIP INDUCTOR, 0.015UH (3225)
L302	1-414-392-31	s	INDUCTOR (SMD) 1.0UH
L303	1-414-392-31	s	INDUCTOR (SMD) 1.0UH
Q100	8-729-026-53	s	TRANSISTOR 2SA1576A-T106-QR
Q101	8-729-105-68	s	TRANSISTOR 2SC3356-K
Q102	8-729-105-68	s	TRANSISTOR 2SC3356-K
Q103	8-729-105-68	s	TRANSISTOR 2SC3356-K
Q200	8-729-026-53	s	TRANSISTOR 2SA1576A-T106-QR
Q201	8-729-105-68	s	TRANSISTOR 2SC3356-K
Q202	8-729-105-68	s	TRANSISTOR 2SC3356-K
Q203	8-729-105-68	s	TRANSISTOR 2SC3356-K
Q204	8-729-105-68	s	TRANSISTOR 2SC3356-K
Q205	8-729-105-68	s	TRANSISTOR 2SC3356-K
Q206	8-729-105-68	s	TRANSISTOR 2SC3356-K
Q400	8-729-928-54	s	TRANSISTOR DTA123JE
Q401	8-729-928-81	s	TRANSISTOR DTC144EE
Q700	8-729-903-46	s	TRANSISTOR 2SB1132-P
Q701	8-729-928-81	s	TRANSISTOR DTC144EE
R100	1-216-864-11	s	CONDUCTOR, CHIP (1608)
R101	1-218-873-11	s	RESISTOR,CHIP 12K 1/10W (1608)
R103	1-211-990-11	s	RESISTOR,CHIP 75 1/10W (1608)
R104	1-211-990-11	s	RESISTOR,CHIP 75 1/10W (1608)
R105	1-211-990-11	s	RESISTOR,CHIP 75 1/10W (1608)
R106	1-218-839-11	s	RESISTOR,CHIP 470 1/10W (1608)
R107	1-216-864-11	s	CONDUCTOR, CHIP (1608)
R108	1-218-847-11	s	RESISTOR, CHIP 1K 1/10W (1608)
R109 *2	1-216-857-11	s	RESISTOR,CHIP 1M 1/10W(1608)
*1	1-216-857-11	s	RESISTOR,CHIP 1M 1/16W(1608)
R110	1-218-866-11	s	RESISTOR,CHIP 6.2K 1/10W(1608)
R111	1-218-854-11	s	RESISTOR,CHIP 2K 1/10W (1608)
R112	1-218-865-11	s	RESISTOR,CHIP 5.6K 1/10W(1608)
R113	1-218-833-11	s	RESISTOR,CHIP 270 1/10W (1608)
R114	1-211-985-11	s	RESISTOR,CHIP 47 1/10W (1608)
R115	1-218-867-11	s	RESISTOR,CHIP 6.8K 1/10W(1608)
R116	1-216-864-11	s	CONDUCTOR, CHIP (1608)
R117	1-218-855-11	s	RESISTOR,CHIP 2.2K 1/10W(1608)
R118	1-218-823-11	s	RESISTOR,CHIP 100 1/10W (1608)
R119	1-211-985-11	s	RESISTOR,CHIP 47 1/10W (1608)
R120	1-218-823-11	s	RESISTOR,CHIP 100 1/10W (1608)
R121	1-218-823-11	s	RESISTOR,CHIP 100 1/10W (1608)
R122	1-218-823-11	s	RESISTOR,CHIP 100 1/10W (1608)
R123	1-218-823-11	s	RESISTOR,CHIP 100 1/10W (1608)
R125	1-218-855-11	s	RESISTOR,CHIP 2.2K 1/10W(1608)
R126	1-218-855-11	s	RESISTOR,CHIP 2.2K 1/10W(1608)
R127	1-211-969-11	s	RESISTOR,CHIP 10 1/10W (1608)
R128	1-211-969-11	s	RESISTOR,CHIP 10 1/10W (1608)
R129	1-211-969-11	s	RESISTOR,CHIP 10 1/10W (1608)
R130	1-211-969-11	s	RESISTOR,CHIP 10 1/10W (1608)
R132	1-218-833-11	s	RESISTOR,CHIP 270 1/10W (1608)
R133	1-218-833-11	s	RESISTOR,CHIP 270 1/10W (1608)
R134	1-211-978-11	s	RESISTOR,CHIP 24 1/10W (1608)
R135	1-211-984-11	s	RESISTOR,CHIP 43 1/10W (1608)
R136	1-211-985-11	s	RESISTOR,CHIP 47 1/10W (1608)
R141	1-211-989-11	s	RESISTOR,CHIP 68 1/10W (1608)
R142	1-211-978-11	s	RESISTOR,CHIP 24 1/10W (1608)
R143	1-218-845-11	s	RESISTOR,CHIP 820 1/10W (1608)
R144	1-211-985-11	s	RESISTOR,CHIP 47 1/10W (1608)

(DIF-134 BOARD for HKDW-102)

Ref. No. or Q'ty	Part No.	SP	Description
R145	1-218-833-11	s	RESISTOR,CHIP 270 1/10W (1608)
R146	1-218-847-11	s	RESISTOR, CHIP 1K 1/10W (1608)
R147	1-211-989-11	s	RESISTOR,CHIP 68 1/10W (1608)
R200	1-218-866-11	s	RESISTOR,CHIP 6.2K 1/10W(1608)
R201	1-218-854-11	s	RESISTOR,CHIP 2K 1/10W (1608)
R202	1-218-865-11	s	RESISTOR,CHIP 5.6K 1/10W(1608)
R203	1-218-833-11	s	RESISTOR,CHIP 270 1/10W (1608)
R204	1-218-823-11	s	RESISTOR,CHIP 100 1/10W (1608)
R205	1-218-823-11	s	RESISTOR,CHIP 100 1/10W (1608)
R206	1-211-985-11	s	RESISTOR,CHIP 47 1/10W (1608)
R207	1-211-985-11	s	RESISTOR,CHIP 47 1/10W (1608)
R208	1-218-875-11	s	RESISTOR,CHIP 15K 1/10W (1608)
R209	1-218-875-11	s	RESISTOR,CHIP 15K 1/10W (1608)
R210	1-218-867-11	s	RESISTOR,CHIP 6.8K 1/10W(1608)
R211	1-216-864-11	s	CONDUCTOR, CHIP (1608)
R212	1-211-985-11	s	RESISTOR,CHIP 47 1/10W (1608)
R213	1-218-873-11	s	RESISTOR,CHIP 12K 1/10W (1608)
R214	1-216-864-11	s	CONDUCTOR, CHIP (1608)
R215	1-218-851-11	s	RESISTOR,CHIP 1.5K 1/10W(1608)
R216	1-218-847-11	s	RESISTOR, CHIP 1K 1/10W (1608)
R217	1-211-985-11	s	RESISTOR,CHIP 47 1/10W (1608)
R218	1-218-839-11	s	RESISTOR,CHIP 470 1/10W (1608)
R220	1-218-833-11	s	RESISTOR,CHIP 270 1/10W (1608)
R221	1-218-833-11	s	RESISTOR,CHIP 270 1/10W (1608)
R222	1-211-985-11	s	RESISTOR,CHIP 47 1/10W (1608)
R223 *2	1-211-977-11	s	RESISTOR,CHIP 22 1/10W (1608)
*1	1-211-976-11	s	RESISTOR,CHIP 20 1/10W (1608)
R224	1-211-985-11	s	RESISTOR,CHIP 47 1/10W (1608)
R225	1-218-833-11	s	RESISTOR,CHIP 270 1/10W (1608)
R226	1-211-989-11	s	RESISTOR,CHIP 68 1/10W (1608)
R227	1-211-978-11	s	RESISTOR,CHIP 24 1/10W (1608)
R228	1-211-984-11	s	RESISTOR,CHIP 43 1/10W (1608)
R229	1-218-829-11	s	RESISTOR,CHIP 180 1/10W (1608)
R230	1-218-866-11	s	RESISTOR,CHIP 6.2K 1/10W(1608)
R231	1-218-871-11	s	RESISTOR,CHIP 10K 1/10W (1608)
R232	1-211-989-11	s	RESISTOR,CHIP 68 1/10W (1608)
R233	1-211-978-11	s	RESISTOR,CHIP 24 1/10W (1608)
R234	1-218-845-11	s	RESISTOR,CHIP 820 1/10W (1608)
R235	1-211-985-11	s	RESISTOR,CHIP 47 1/10W (1608)
R236	1-211-985-11	s	RESISTOR,CHIP 47 1/10W (1608)
R237	1-211-985-11	s	RESISTOR,CHIP 47 1/10W (1608)
R238	1-218-855-11	s	RESISTOR,CHIP 2.2K 1/10W(1608)
R239	1-211-985-11	s	RESISTOR,CHIP 47 1/10W (1608)
R240	1-218-827-11	s	RESISTOR,CHIP 150 1/10W (1608)
R241	1-211-985-11	s	RESISTOR,CHIP 47 1/10W (1608)
R243	1-218-827-11	s	RESISTOR,CHIP 150 1/10W (1608)
R244	1-218-855-11	s	RESISTOR,CHIP 2.2K 1/10W(1608)
R245	1-218-847-11	s	RESISTOR, CHIP 1K 1/10W (1608)
R246	1-218-855-11	s	RESISTOR,CHIP 2.2K 1/10W(1608)
R247	1-211-989-11	s	RESISTOR,CHIP 68 1/10W (1608)
R248	1-211-989-11	s	RESISTOR,CHIP 68 1/10W (1608)
R249	1-218-847-11	s	RESISTOR, CHIP 1K 1/10W (1608)
R250	1-218-877-11	s	RESISTOR,CHIP 18K 1/10W (1608)
R251	1-218-877-11	s	RESISTOR,CHIP 18K 1/10W (1608)
R252	1-218-895-11	s	RESISTOR,CHIP 100K 1/10W(1608)
R253	1-218-895-11	s	RESISTOR,CHIP 100K 1/10W(1608)
R300	1-218-823-11	s	RESISTOR,CHIP 100 1/10W (1608)
R301	1-218-823-11	s	RESISTOR,CHIP 100 1/10W (1608)
R302	1-218-823-11	s	RESISTOR,CHIP 100 1/10W (1608)

(DIF-134 BOARD for HKDW-102)

Ref. No. or Q'ty	Part No.	SP	Description
R400	1-218-823-11	s	RESISTOR,CHIP 100 1/10W (1608)
R401	1-218-823-11	s	RESISTOR,CHIP 100 1/10W (1608)
R402	1-218-823-11	s	RESISTOR,CHIP 100 1/10W (1608)
R407	1-218-847-11	s	RESISTOR, CHIP 1K 1/10W (1608)
R408	1-218-847-11	s	RESISTOR, CHIP 1K 1/10W (1608)
R409	1-218-835-11	s	RESISTOR,CHIP 330 1/10W (1608)
R410	1-218-863-11	s	RESISTOR,CHIP 4.7K 1/10W(1608)
R412	1-216-864-11	s	CONDUCTOR, CHIP (1608)
R419	1-218-863-11	s	RESISTOR,CHIP 4.7K 1/10W(1608)
R421	1-218-871-11	s	RESISTOR,CHIP 10K 1/10W (1608)
R422	1-218-835-11	s	RESISTOR,CHIP 330 1/10W (1608)
R423	1-216-864-11	s	CONDUCTOR, CHIP (1608)
R602	1-218-895-11	s	RESISTOR,CHIP 100K 1/10W(1608)
R605	1-218-895-11	s	RESISTOR,CHIP 100K 1/10W(1608)
R606	1-218-847-11	s	RESISTOR, CHIP 1K 1/10W (1608)
R607	1-218-895-11	s	RESISTOR,CHIP 100K 1/10W(1608)
R608	1-218-823-11	s	RESISTOR,CHIP 100 1/10W (1608)
R609	1-218-823-11	s	RESISTOR,CHIP 100 1/10W (1608)
R610	1-211-977-11	s	RESISTOR,CHIP 22 1/10W (1608)
R611	1-211-977-11	s	RESISTOR,CHIP 22 1/10W (1608)
R612	1-211-985-11	s	RESISTOR,CHIP 47 1/10W (1608)
R614	1-211-977-11	s	RESISTOR,CHIP 22 1/10W (1608)
R619	1-218-895-11	s	RESISTOR,CHIP 100K 1/10W(1608)
R624	1-216-864-11	s	CONDUCTOR, CHIP (1608)
R700	1-218-895-11	s	RESISTOR,CHIP 100K 1/10W(1608)
R701	1-218-895-11	s	RESISTOR,CHIP 100K 1/10W(1608)
R703	1-218-823-11	s	RESISTOR,CHIP 100 1/10W (1608)
R704	1-216-864-11	s	CONDUCTOR, CHIP (1608)
R706	1-211-985-11	s	RESISTOR,CHIP 47 1/10W (1608)
R708	1-218-847-11	s	RESISTOR, CHIP 1K 1/10W (1608)
R709	1-218-847-11	s	RESISTOR, CHIP 1K 1/10W (1608)
R711 *2	1-211-977-11	s	RESISTOR,CHIP 22 1/10W (1608)
R712	1-211-977-11	s	RESISTOR,CHIP 22 1/10W (1608)
R718	1-218-847-11	s	RESISTOR, CHIP 1K 1/10W (1608)
R719	1-218-847-11	s	RESISTOR, CHIP 1K 1/10W (1608)
R720	1-218-871-11	s	RESISTOR,CHIP 10K 1/10W (1608)
R724	1-211-985-11	s	RESISTOR,CHIP 47 1/10W (1608)
R725	1-211-985-11	s	RESISTOR,CHIP 47 1/10W (1608)
R726	1-211-985-11	s	RESISTOR,CHIP 47 1/10W (1608)
R727	1-211-985-11	s	RESISTOR,CHIP 47 1/10W (1608)
R731	1-216-864-11	s	CONDUCTOR, CHIP (1608)
R732	1-211-985-11	s	RESISTOR,CHIP 47 1/10W (1608)
R733	1-211-985-11	s	RESISTOR,CHIP 47 1/10W (1608)
R734	1-211-985-11	s	RESISTOR,CHIP 47 1/10W (1608)
R735	1-211-985-11	s	RESISTOR,CHIP 47 1/10W (1608)
R738	1-211-985-11	s	RESISTOR,CHIP 47 1/10W (1608)
R739	1-211-985-11	s	RESISTOR,CHIP 47 1/10W (1608)
R741 *2	1-216-864-11	s	CONDUCTOR, CHIP (1608)
RB100	1-233-576-11	s	RESISTOR,CHIP NETWORK 100
RB101	1-233-576-11	s	RESISTOR,CHIP NETWORK 100
RB102	1-233-575-11	s	RES, CHIP NETWORK 22
RB103	1-233-575-11	s	RES, CHIP NETWORK 22
RB104	1-233-575-11	s	RES, CHIP NETWORK 22
RB105	1-233-575-11	s	RES, CHIP NETWORK 22
RB200	1-233-576-11	s	RESISTOR,CHIP NETWORK 100
RB201	1-233-576-11	s	RESISTOR,CHIP NETWORK 100
RB400	1-236-908-11	s	RESISTOR,NETWORK 10K (3216)
RB600	1-233-810-21	s	RES, NETWORK 100K (3216)

(DIF-134 BOARD for HKDW-102)

Ref. No. or Q'ty	Part No.	SP	Description
RB601	1-233-810-21	s	RES, NETWORK 100K (3216)
RB602	1-233-810-21	s	RES, NETWORK 100K (3216)
RB603	1-233-810-21	s	RES, NETWORK 100K (3216)
RB604	1-233-810-21	s	RES, NETWORK 100K (3216)
RB605	1-233-810-21	s	RES, NETWORK 100K (3216)
RB606	1-233-810-21	s	RES, NETWORK 100K (3216)
RB607	1-233-810-21	s	RES, NETWORK 100K (3216)
RB608	1-233-810-21	s	RES, NETWORK 100K (3216)
RB609	1-233-412-11	s	RESISTOR,CHIP NETWORK 1K
RB610	1-233-412-11	s	RESISTOR,CHIP NETWORK 1K
RB611	1-233-412-11	s	RESISTOR,CHIP NETWORK 1K
RB612	1-233-412-11	s	RESISTOR,CHIP NETWORK 1K
RB613	1-233-412-11	s	RESISTOR,CHIP NETWORK 1K
RB614	1-233-412-11	s	RESISTOR,CHIP NETWORK 1K
RB615	1-233-412-11	s	RESISTOR,CHIP NETWORK 1K
RB616	1-233-412-11	s	RESISTOR,CHIP NETWORK 1K
RB617	1-233-412-11	s	RESISTOR,CHIP NETWORK 1K
RB618	1-233-412-11	s	RESISTOR,CHIP NETWORK 1K
RB619	1-233-412-11	s	RESISTOR,CHIP NETWORK 1K
RB620	1-233-412-11	s	RESISTOR,CHIP NETWORK 1K
RB621	1-233-412-11	s	RESISTOR,CHIP NETWORK 1K
RB622	1-233-412-11	s	RESISTOR,CHIP NETWORK 1K
RB623	1-233-412-11	s	RESISTOR,CHIP NETWORK 1K
RB624	1-233-412-11	s	RESISTOR,CHIP NETWORK 1K
RB626	1-239-409-11	s	RESISTOR NETWORK 47 (1608)
RB627	1-239-409-11	s	RESISTOR NETWORK 47 (1608)
RB628	1-239-409-11	s	RESISTOR NETWORK 47 (1608)
RB629	1-239-409-11	s	RESISTOR NETWORK 47 (1608)
RB630	1-239-409-11	s	RESISTOR NETWORK 47 (1608)
RB631	1-233-810-21	s	RES, NETWORK 100K (3216)
RB700	1-233-412-11	s	RESISTOR,CHIP NETWORK 1K
RB701	1-233-412-11	s	RESISTOR,CHIP NETWORK 1K
RB702	1-233-412-11	s	RESISTOR,CHIP NETWORK 1K
RB703	1-239-409-11	s	RESISTOR NETWORK 47 (1608)
RB704	1-239-409-11	s	RESISTOR NETWORK 47 (1608)
RB705	1-239-409-11	s	RESISTOR NETWORK 47 (1608)
RB706	1-239-409-11	s	RESISTOR NETWORK 47 (1608)
RB709	1-239-409-11	s	RESISTOR NETWORK 47 (1608)
RB710	1-239-409-11	s	RESISTOR NETWORK 47 (1608)
RB711	1-239-409-11	s	RESISTOR NETWORK 47 (1608)
S700	1-692-271-31	s	SWITCH, SLIDE
TP100	1-535-877-22	s	CHIP,CHECKER (TEST POINT)
TP200	1-535-877-22	s	CHIP,CHECKER (TEST POINT)

DIO-65 BOARD

[Lot No. 261 -] HDW-2000, M2000/P, M2100/P, A2100
[Lot No. 4C2 -] HDW-D2000
[Lot No. 462 -] HDW-S2000/P
[Lot No. 434 -] DVW-2000/P, M2000/P
[Lot No. 261 -] MSW-2000, M2000/P, A2000/P, M2100/P
[Lot No. 495 -] MSW-M2000E/P, M2100E/P

*1: [Lot No. 261 -] [Board No. suffix 13 -]
*2: [Lot No. 2A3 -] [Board No. suffix 13 -]
*3: [Lot No. 341 -] [Board No. suffix 14 -]

Ref. No. or Q'ty	Part No.	SP	Description
1pc	A-8327-808-B	s	MOUNTED CIRCUIT BOARD, DIO-65
C101	1-162-920-11	s	CAPACITOR,CERAMIC 27PF/50V CH
C102	1-125-891-11	s	CAPACITOR CERAMIC 0.47MF/10V
C103	1-164-156-11	s	CAPACITOR,CERAMIC 0.1MF/25V F
C104	1-162-920-11	s	CAPACITOR,CERAMIC 27PF/50V CH
C105	1-164-156-11	s	CAPACITOR,CERAMIC 0.1MF/25V F
C106	1-164-156-11	s	CAPACITOR,CERAMIC 0.1MF/25V F
C107	1-126-399-11	s	CAPACITOR ELECT 10MF/35V(CHIP)
C108	1-126-399-11	s	CAPACITOR ELECT 10MF/35V(CHIP)
C109	1-164-156-11	s	CAPACITOR,CERAMIC 0.1MF/25V F
C110	1-164-156-11	s	CAPACITOR,CERAMIC 0.1MF/25V F
C111	1-162-913-11	s	CAPACITOR,CHIP CERAMIC 8PF/50V
C112	1-162-913-11	s	CAPACITOR,CHIP CERAMIC 8PF/50V
C113	1-162-970-11	s	CAPACITOR CERAMIC 0.01MF/25V B
C114	1-162-970-11	s	CAPACITOR CERAMIC 0.01MF/25V B
C115	1-162-915-11	s	CAPACITOR,CERAMIC 10PF/50V CH
C116	1-162-915-11	s	CAPACITOR,CERAMIC 10PF/50V CH
C117	1-126-394-11	s	CAPACITOR,ELECT 10MF/16V(CHIP)
C118	1-164-156-11	s	CAPACITOR,CERAMIC 0.1MF/25V F
C119	1-125-891-11	s	CAPACITOR CERAMIC 0.47MF/10V
C120	1-126-394-11	s	CAPACITOR,ELECT 10MF/16V(CHIP)
C121	1-126-398-11	s	CAPACITOR ELECT 4.7MF/35V(CHIP
C122	*2 1-162-927-11	s	CAPACITOR,CERAMIC 100PF/50V CH
C123	*2 1-162-925-11	s	CAPACITOR,CERAMIC 68PF/50V CH
	*1 1-164-218-11	s	CAPACITOR,CERAMIC 180PF/50V CH
C124	1-162-970-11	s	CAPACITOR CERAMIC 0.01MF/25V B
C125	*2 1-162-927-11	s	CAPACITOR,CERAMIC 100PF/50V CH
C126	1-164-156-11	s	CAPACITOR,CERAMIC 0.1MF/25V F
C127	1-107-826-11	s	CAPACITOR,CHIP CERAMIC 0.1MF
C128	1-126-399-11	s	CAPACITOR ELECT 10MF/35V(CHIP)
C129	1-126-394-11	s	CAPACITOR,ELECT 10MF/16V(CHIP)
C130	1-126-394-11	s	CAPACITOR,ELECT 10MF/16V(CHIP)
C131	1-107-826-11	s	CAPACITOR,CHIP CERAMIC 0.1MF
C132	1-107-826-11	s	CAPACITOR,CHIP CERAMIC 0.1MF
C133	1-107-826-11	s	CAPACITOR,CHIP CERAMIC 0.1MF
C135	*2 1-168-968-11	s	CAPACITOR,CERAMIC 4700PF/50V B
	*1 1-162-969-11	s	CAPACITOR,CERAMIC 6800PF/25V B
C136	1-162-921-11	s	CAPACITOR,CERAMIC 33PF/50V CH
C137	1-162-928-11	s	CAPACITOR,CERAMIC 120PF/50V CH
C138	1-162-915-11	s	CAPACITOR,CERAMIC 10PF/50V CH
CN1	1-774-792-21	s	CONNECTOR, FPC/FFC (4P)
CN2	1-794-224-11	o	CONNECTOR, BOARD TO BOARD 50P
CN3	1-794-223-11	o	CONNECTOR, BOARD TO BOARD 40P
CN4	1-566-765-11	o	PIN,CONNECTOR 10P
CT101	1-141-390-11	s	CAPACITOR, TRIMMER
D101	8-719-024-81	s	DIODE 1SS300-TE85L
E101	1-535-757-11	s	CHIP, CHECKER (CONNECTOR)
FB1	1-500-449-21	s	BEAD, FERRITE (SMD)

(DIO-65 BOARD)

Ref. No. or Q'ty	Part No.	SP	Description
FB2	1-500-449-21	s	BEAD, FERRITE (SMD)
FB3	1-500-449-21	s	BEAD, FERRITE (SMD)
FB4	1-500-449-21	s	BEAD, FERRITE (SMD)
FB5	1-500-449-21	s	BEAD, FERRITE (SMD)
FB6	1-500-449-21	s	BEAD, FERRITE (SMD)
FB7	1-500-449-21	s	BEAD, FERRITE (SMD)
FB8	1-500-449-21	s	BEAD, FERRITE (SMD)
FB9	1-500-449-21	s	BEAD, FERRITE (SMD)
FB10	1-500-449-21	s	BEAD, FERRITE (SMD)
FB11	1-500-449-21	s	BEAD, FERRITE (SMD)
FB12	1-500-449-21	s	BEAD, FERRITE (SMD)
FB13	1-500-449-21	s	BEAD, FERRITE (SMD)
FB14	1-500-449-21	s	BEAD, FERRITE (SMD)
FB15	1-500-449-21	s	BEAD, FERRITE (SMD)
FB16	1-500-449-21	s	BEAD, FERRITE (SMD)
FB17	1-500-449-21	s	BEAD, FERRITE (SMD)
FB18	1-500-449-21	s	BEAD, FERRITE (SMD)
FB19	1-500-449-21	s	BEAD, FERRITE (SMD)
FB20	1-500-449-21	s	BEAD, FERRITE (SMD)
FB21	1-500-449-21	s	BEAD, FERRITE (SMD)
FB22	1-500-449-21	s	BEAD, FERRITE (SMD)
FB23	1-500-449-21	s	BEAD, FERRITE (SMD)
FB24	1-500-449-21	s	BEAD, FERRITE (SMD)
FB25	1-500-449-21	s	BEAD, FERRITE (SMD)
FB26	1-500-449-21	s	BEAD, FERRITE (SMD)
FB27	1-500-449-21	s	BEAD, FERRITE (SMD)
FB28	1-500-449-21	s	BEAD, FERRITE (SMD)
FB29	1-500-449-21	s	BEAD, FERRITE (SMD)
IC101	8-759-077-92	s	IC NJM78L15A-T3
IC102	8-759-654-91	s	IC CXD9137R
IC103	8-759-654-92	s	IC CXA8103M-TLM
IC104	8-759-524-10	s	IC TC74VHC157FT (EL)
IC105	8-759-549-01	s	IC SN74LV125APWR
IC106	8-759-523-02	s	IC TC74HC4053AFT(EL)
L101	1-410-378-11	s	INDUCTOR,CHIP 5.6UH (3225)
L102	1-410-378-11	s	INDUCTOR,CHIP 5.6UH (3225)
L103	1-412-056-11	s	INDUCTOR 4.7UH (3225)
L104	1-414-398-11	s	INDUCTOR (SMD) 10UH
L105	1-412-056-11	s	INDUCTOR 4.7UH (3225)
L106	*2 1-410-737-31	s	INDUCTOR,CHIP 0.47UH (3225)
	*1 1-410-376-21	s	INDUCTOR,CHIP 3.9UH (3225)
L107	*2 1-410-737-31	s	INDUCTOR,CHIP 0.47UH (3225)
	*1 1-410-376-21	s	INDUCTOR,CHIP 3.9UH (3225)
Q101	8-729-101-07	s	TRANSISTOR 2SB798
Q102	8-729-928-81	s	TRANSISTOR DTC144EE
Q103	8-729-101-07	s	TRANSISTOR 2SB798
Q104	8-729-928-81	s	TRANSISTOR DTC144EE
Q105	8-729-928-27	s	TRANSISTOR DTA144EE
R102	*3 1-218-903-11	s	RESISTOR,CHIP 220K 1/16W(1608)
	*1 1-218-748-11	s	RESISTOR,CHIP 220K 1/16W(1608)
R103	*3 1-218-871-11	s	RESISTOR,CHIP 10K 1/16W(1608)
	*1 1-218-716-11	s	RESISTOR,CHIP 10K 1/16W(1608)
R104	1-216-857-11	s	RESISTOR,CHIP 1M 1/16W(1608)
R105	1-218-716-11	s	RESISTOR,CHIP 10K 1/16W(1608)
R106	1-218-748-11	s	RESISTOR,CHIP 220K 1/16W(1608)
R107	*3 1-218-847-11	s	RESISTOR,CHIP 1.0K 1/16W(1608)
	*1 1-218-692-11	s	RESISTOR,CHIP 1.0K 1/16W(1608)
R108	*3 1-218-903-11	s	RESISTOR,CHIP 220K 1/16W(1608)
	*1 1-218-748-11	s	RESISTOR,CHIP 220K 1/16W(1608)

(DIO-65 BOARD)

Ref. No. or Q'ty	Part No.	SP	Description
R109	*3 1-218-847-11	s	RESISTOR,CHIP 1.0K 1/16W(1608)
	*1 1-218-692-11	s	RESISTOR,CHIP 1.0K 1/16W(1608)
R110	*3 1-218-847-11	s	RESISTOR,CHIP 1.0K 1/16W(1608)
	*1 1-218-692-11	s	RESISTOR,CHIP 1.0K 1/16W(1608)
R111	*3 1-218-839-11	s	RESISTOR,CHIP 470 1/16W (1608)
	*1 1-218-684-11	s	RESISTOR,CHIP 470 1/16W (1608)
R112	*3 1-218-903-11	s	RESISTOR,CHIP 220K 1/16W(1608)
	*1 1-218-748-11	s	RESISTOR,CHIP 220K 1/16W(1608)
R113	*3 1-218-851-11	s	RESISTOR,CHIP 1.5K 1/16W(1608)
	*1 1-218-696-11	s	RESISTOR,CHIP 1.5K 1/16W(1608)
R115	*3 1-218-823-11	s	RESISTOR,CHIP 100 1/16W (1608)
	*1 1-218-668-11	s	RESISTOR,CHIP 100 1/16W (1608)
R116	*3 1-211-977-11	s	RESISTOR,CHIP 22 1/16W (1608)
	*1 1-218-652-11	s	RESISTOR,CHIP 22 1/16W (1608)
R117	*3 1-218-903-11	s	RESISTOR,CHIP 220K 1/16W(1608)
	*1 1-218-748-11	s	RESISTOR,CHIP 220K 1/16W(1608)
R118	*3 1-218-903-11	s	RESISTOR,CHIP 220K 1/16W(1608)
	*1 1-218-748-11	s	RESISTOR,CHIP 220K 1/16W(1608)
R119	*3 1-218-903-11	s	RESISTOR,CHIP 220K 1/16W(1608)
	*1 1-218-748-11	s	RESISTOR,CHIP 220K 1/16W(1608)
R120	*3 1-218-863-11	s	RESISTOR,CHIP 4.7K 1/16W(1608)
	*1 1-218-708-11	s	RESISTOR,CHIP 4.7K 1/16W(1608)
R121	*3 1-218-871-11	s	RESISTOR,CHIP 10K 1/16W(1608)
	*2 1-218-716-11	s	RESISTOR,CHIP 10K 1/16W(1608)
	*1 1-218-702-11	s	RESISTOR CHIP 2.7K 1/16W(1608)
R122	*3 1-218-857-11	s	RESISTOR,CHIP 2.7K 1/16W(1608)
	*2 1-218-702-11	s	RESISTOR,CHIP 2.7K 1/16W(1608)
	*1 1-218-700-11	s	RESISTOR,CHIP 2.2K 1/16W(1608)
R123	1-216-864-11	s	RESISTOR,CHIP 0 1/16W (1608)
R124	*3 1-218-871-11	s	RESISTOR,CHIP 10K 1/16W(1608)
	*1 1-218-716-11	s	RESISTOR,CHIP 10K 1/16W(1608)
R126	*3 1-218-839-11	s	RESISTOR,CHIP 470 1/16W (1608)
	*1 1-218-684-11	s	RESISTOR,CHIP 470 1/16W (1608)
R127	1-216-864-11	s	RESISTOR,CHIP 0 1/16W (1608)
R131	1-218-740-11	s	RESISTOR,CHIP 100K 1/16W(1608)
R132	*3 1-218-827-11	s	RESISTOR,CHIP 150 1/16W(1608)
	*1 1-218-672-11	s	RESISTOR,CHIP 150 1/16W(1608)
R133	1-216-864-11	s	RESISTOR,CHIP 0 1/16W (1608)
R134	1-216-864-11	s	RESISTOR,CHIP 0 1/16W (1608)
R135	*3 1-218-855-11	s	RESISTOR,CHIP 2.2K 1/16W(1608)
	*1 1-218-700-11	s	RESISTOR,CHIP 2.2K 1/16W(1608)
R136	*3 1-218-871-11	s	RESISTOR,CHIP 10K 1/16W(1608)
	*1 1-218-716-11	s	RESISTOR,CHIP 10K 1/16W(1608)
R137	1-218-688-11	s	RESISTOR,CHIP 680 1/16W(1608)
RB101	1-239-621-11	s	NETWORK RESISTOR 22 (1608)
TP101	1-535-757-11	s	CHIP, CHECKER (CONNECTOR)
TP102	1-535-757-11	s	CHIP, CHECKER (CONNECTOR)
TP103	1-535-757-11	s	CHIP, CHECKER (CONNECTOR)
TP104	1-535-757-11	s	CHIP, CHECKER (CONNECTOR)
TP105	1-535-757-11	s	CHIP, CHECKER (CONNECTOR)
TP106	1-535-757-11	s	CHIP, CHECKER (CONNECTOR)
X101	1-781-977-11	s	VIBRATOR, CRYSTAL (SMD)

DM-123/P BOARD [SUFFIX 14]

---

*N: [Lot No. 261 - 355] HDW-M2000, M2100, A2100
MSW-M2000, A2000, M2100
*P: [Lot No. 261 - 355] HDW-M2000P, M2100P
MSW-M2000P, A2000P, M2100P

Ref. No. or Q'ty	Part No.	SP	Description
1pc	*N A-8324-843-B	o	MOUNTED CIRCUIT BOARD, DM-123
	*P A-8324-916-B	o	MOUNTED CIRCUIT BOARD, DM-123P
6pcs	7-682-902-11	s	SCREW +PWH 2.6X5(EP-FE/ZN/CM2)
1pc	3-179-084-01	s	LEVER(R),PRINTED C,BOARD
1pc	3-179-085-01	s	LEVER(L),PRINTED C.BOARD
C101	1-164-315-11	s	CAPACITOR,CERAMIC 470PF/50V CH
C102	1-107-826-11	s	CAPACITOR,CHIP CERAMIC 0.1MF
C103	1-107-826-11	s	CAPACITOR,CHIP CERAMIC 0.1MF
C104	1-115-416-11	s	CAPACITOR,CERAMIC 1000PF/25V
C105	*N 1-162-918-11	s	CAPACITOR,CERAMIC 18PF/50V CH
C106	1-162-919-11	s	CAPACITOR,CERAMIC 22PF/50V CH
C107	1-107-826-11	s	CAPACITOR,CHIP CERAMIC 0.1MF
C108	1-162-919-11	s	CAPACITOR,CERAMIC 22PF/50V CH
C109	1-107-826-11	s	CAPACITOR,CHIP CERAMIC 0.1MF
C110	1-107-826-11	s	CAPACITOR,CHIP CERAMIC 0.1MF
C111	1-107-826-11	s	CAPACITOR,CHIP CERAMIC 0.1MF
C112	1-107-826-11	s	CAPACITOR,CHIP CERAMIC 0.1MF
C113	1-164-380-11	s	CAPACITOR,CERAMIC 51PF CH (M-)
C114	1-107-826-11	s	CAPACITOR,CHIP CERAMIC 0.1MF
C115	1-107-826-11	s	CAPACITOR,CHIP CERAMIC 0.1MF
C116	1-162-924-11	s	CAPACITOR,CERAMIC 56PF/50V CH
C117	1-164-315-11	s	CAPACITOR,CERAMIC 470PF/50V CH
C118	1-107-826-11	s	CAPACITOR,CHIP CERAMIC 0.1MF
C119	1-107-826-11	s	CAPACITOR,CHIP CERAMIC 0.1MF
C120	1-107-826-11	s	CAPACITOR,CHIP CERAMIC 0.1MF
C121	1-107-826-11	s	CAPACITOR,CHIP CERAMIC 0.1MF
C122	1-107-826-11	s	CAPACITOR,CHIP CERAMIC 0.1MF
C123	1-164-238-11	s	CAPACITOR,CERAMIC 36PF/50V CH
C124	*N 1-162-924-11	s	CAPACITOR,CERAMIC 56PF/50V CH
	*P 1-162-920-11	s	CAPACITOR,CERAMIC 27PF/50V CH
C125	1-107-826-11	s	CAPACITOR,CHIP CERAMIC 0.1MF
C126	1-162-925-11	s	CAPACITOR,CERAMIC 68PF/50V CH
C127	*N 1-162-928-11	s	CAPACITOR,CERAMIC 120PF/50V CH
	*P 1-162-926-11	s	CAPACITOR,CERAMIC 82PF/50V CH
C128	1-164-238-11	s	CAPACITOR,CERAMIC 36PF/50V CH
C129	*N 1-162-924-11	s	CAPACITOR,CERAMIC 56PF/50V CH
	*P 1-162-920-11	s	CAPACITOR,CERAMIC 27PF/50V CH
C130	1-107-826-11	s	CAPACITOR,CHIP CERAMIC 0.1MF
C131	1-107-826-11	s	CAPACITOR,CHIP CERAMIC 0.1MF
C132	1-107-826-11	s	CAPACITOR,CHIP CERAMIC 0.1MF
C133	1-107-826-11	s	CAPACITOR,CHIP CERAMIC 0.1MF
C134	1-107-826-11	s	CAPACITOR,CHIP CERAMIC 0.1MF
C135	1-162-923-11	s	CAPACITOR,CERAMIC 47PF/50V CH
C136	1-164-380-11	s	CAPACITOR,CERAMIC 51PF CH (M-)
C137	1-162-928-11	s	CAPACITOR,CERAMIC 120PF/50V CH
C138	1-162-917-11	s	CAPACITOR,CERAMIC 15PF/50V CH
C139	1-107-826-11	s	CAPACITOR,CHIP CERAMIC 0.1MF
C140	1-107-826-11	s	CAPACITOR,CHIP CERAMIC 0.1MF
C141	1-107-826-11	s	CAPACITOR,CHIP CERAMIC 0.1MF
C142	1-107-826-11	s	CAPACITOR,CHIP CERAMIC 0.1MF
C143	1-162-913-11	s	CAPACITOR,CHIP CERAMIC 8PF/50V
C144	1-164-379-11	s	CAPACITOR,CERAMIC 43PF/50V CH
C145	1-107-826-11	s	CAPACITOR,CHIP CERAMIC 0.1MF
C146	1-107-826-11	s	CAPACITOR,CHIP CERAMIC 0.1MF
C147	1-107-826-11	s	CAPACITOR,CHIP CERAMIC 0.1MF

(DM-123/P BOARD [SUFFIX 14])

Ref. No. or Q'ty	Part No.	SP	Description
C148	1-107-826-11	s	CAPACITOR,CHIP CERAMIC 0.1MF
C149	1-107-826-11	s	CAPACITOR,CHIP CERAMIC 0.1MF
C150	1-104-608-11	s	CAPACITOR, ELECT 33MF/6.3V
C151	1-107-826-11	s	CAPACITOR,CHIP CERAMIC 0.1MF
C152	1-107-826-11	s	CAPACITOR,CHIP CERAMIC 0.1MF
C153	1-107-826-11	s	CAPACITOR,CHIP CERAMIC 0.1MF
C154	1-104-608-11	s	CAPACITOR, ELECT 33MF/6.3V
C155	1-107-826-11	s	CAPACITOR,CHIP CERAMIC 0.1MF
C156	1-107-826-11	s	CAPACITOR,CHIP CERAMIC 0.1MF
C157	1-107-826-11	s	CAPACITOR,CHIP CERAMIC 0.1MF
C158	1-107-826-11	s	CAPACITOR,CHIP CERAMIC 0.1MF
C159	1-107-826-11	s	CAPACITOR,CHIP CERAMIC 0.1MF
C160	1-164-315-11	s	CAPACITOR,CERAMIC 470PF/50V CH
C161	1-104-608-11	s	CAPACITOR, ELECT 33MF/6.3V
C162	1-164-315-11	s	CAPACITOR,CERAMIC 470PF/50V CH
C163	1-107-826-11	s	CAPACITOR,CHIP CERAMIC 0.1MF
C164	1-107-826-11	s	CAPACITOR,CHIP CERAMIC 0.1MF
C165	1-107-826-11	s	CAPACITOR,CHIP CERAMIC 0.1MF
C166	1-107-826-11	s	CAPACITOR,CHIP CERAMIC 0.1MF
C167	1-107-826-11	s	CAPACITOR,CHIP CERAMIC 0.1MF
C168	*N 1-164-383-11	s	CAPACITOR,CERAMIC 110PF/50V CH
	*P 1-162-926-11	s	CAPACITOR,CERAMIC 82PF/50V CH
C169	*N 1-164-384-11	s	CAPACITOR CERAMIC 130PF/50V CH
	*P 1-164-217-11	s	CAPACITOR,CERAMIC 150PF/50V CH
C170	1-107-826-11	s	CAPACITOR,CHIP CERAMIC 0.1MF
C171	1-107-826-11	s	CAPACITOR,CHIP CERAMIC 0.1MF
C172	1-107-826-11	s	CAPACITOR,CHIP CERAMIC 0.1MF
C173	1-107-826-11	s	CAPACITOR,CHIP CERAMIC 0.1MF
C174	1-107-826-11	s	CAPACITOR,CHIP CERAMIC 0.1MF
C175	1-107-826-11	s	CAPACITOR,CHIP CERAMIC 0.1MF
C176	1-107-826-11	s	CAPACITOR,CHIP CERAMIC 0.1MF
C177	1-107-826-11	s	CAPACITOR,CHIP CERAMIC 0.1MF
C178	1-107-826-11	s	CAPACITOR,CHIP CERAMIC 0.1MF
C179	1-126-391-11	s	CAPACITOR ELECT 47MF/6.3V(105)
C180	1-107-826-11	s	CAPACITOR,CHIP CERAMIC 0.1MF
C181	1-107-826-11	s	CAPACITOR,CHIP CERAMIC 0.1MF
C182	1-162-910-11	s	CAPACITOR,CERAMIC 5PF/50V 1608
C183	1-162-910-11	s	CAPACITOR,CERAMIC 5PF/50V 1608
C184	1-104-608-11	s	CAPACITOR, ELECT 33MF/6.3V
C185	1-109-982-11	s	CAPACITOR,CHIP CERAMIC 1MF/10V
C186	1-109-982-11	s	CAPACITOR,CHIP CERAMIC 1MF/10V
C187	1-107-826-11	s	CAPACITOR,CHIP CERAMIC 0.1MF
C188	1-107-826-11	s	CAPACITOR,CHIP CERAMIC 0.1MF
C189	1-107-826-11	s	CAPACITOR,CHIP CERAMIC 0.1MF
C190	1-115-416-11	s	CAPACITOR,CERAMIC 1000PF/25V
C191	1-126-391-11	s	CAPACITOR ELECT 47MF/6.3V(105)
C192	1-107-826-11	s	CAPACITOR,CHIP CERAMIC 0.1MF
C193	1-162-913-11	s	CAPACITOR,CHIP CERAMIC 8PF/50V
C194	1-107-826-11	s	CAPACITOR,CHIP CERAMIC 0.1MF
C195	1-162-919-11	s	CAPACITOR,CERAMIC 22PF/50V CH
C196	1-109-982-11	s	CAPACITOR,CHIP CERAMIC 1MF/10V
C197	1-107-826-11	s	CAPACITOR,CHIP CERAMIC 0.1MF
C198	1-162-959-11	s	CAPACITOR,CERAMIC 330PF/50V SL
C199	1-107-826-11	s	CAPACITOR,CHIP CERAMIC 0.1MF
C200	1-162-919-11	s	CAPACITOR,CERAMIC 22PF/50V CH
C201	1-107-826-11	s	CAPACITOR,CHIP CERAMIC 0.1MF
C202	1-162-919-11	s	CAPACITOR,CERAMIC 22PF/50V CH
C203	1-107-826-11	s	CAPACITOR,CHIP CERAMIC 0.1MF
C204	1-107-826-11	s	CAPACITOR,CHIP CERAMIC 0.1MF

(DM-123/P BOARD [SUFFIX 14])

Ref. No. or Q'ty	Part No.	SP	Description
C205	1-164-388-11	s	CAPACITOR,CERAMIC 270PF/50V CH
C206	1-164-384-11	s	CAPACITOR CERAMIC 130PF/50V CH
C207	1-162-388-11	s	CAPACITOR,CERAMIC 270PF/50V CH
C208	1-162-927-11	s	CAPACITOR,CERAMIC 100PF/50V CH
C209	1-162-920-11	s	CAPACITOR,CERAMIC 27PF/50V CH
C211	1-162-923-11	s	CAPACITOR,CERAMIC 47PF/50V CH
C212	1-162-923-11	s	CAPACITOR,CERAMIC 47PF/50V CH
C213	1-162-923-11	s	CAPACITOR,CERAMIC 47PF/50V CH
C214	1-107-826-11	s	CAPACITOR,CHIP CERAMIC 0.1MF
C215	1-107-826-11	s	CAPACITOR,CHIP CERAMIC 0.1MF
C216	1-107-826-11	s	CAPACITOR,CHIP CERAMIC 0.1MF
C217	1-162-923-11	s	CAPACITOR,CERAMIC 47PF/50V CH
C301	1-107-826-11	s	CAPACITOR,CHIP CERAMIC 0.1MF
C302	1-107-826-11	s	CAPACITOR,CHIP CERAMIC 0.1MF
C303	1-164-315-11	s	CAPACITOR,CERAMIC 470PF/50V CH
C304	1-162-919-11	s	CAPACITOR,CERAMIC 22PF/50V CH
C305	1-162-921-11	s	CAPACITOR,CERAMIC 33PF/50V CH
C306	1-162-919-11	s	CAPACITOR,CERAMIC 22PF/50V CH
C307	1-162-921-11	s	CAPACITOR,CERAMIC 33PF/50V CH
C308	1-115-416-11	s	CAPACITOR,CERAMIC 1000PF/25V
C309	1-162-918-11	s	CAPACITOR,CERAMIC 18PF/50V CH
C310	1-104-608-11	s	CAPACITOR, ELECT 33MF/6.3V
C311	1-107-826-11	s	CAPACITOR,CHIP CERAMIC 0.1MF
C312	1-107-826-11	s	CAPACITOR,CHIP CERAMIC 0.1MF
C313	1-107-826-11	s	CAPACITOR,CHIP CERAMIC 0.1MF
C314	1-164-315-11	s	CAPACITOR,CERAMIC 470PF/50V CH
C315	1-107-826-11	s	CAPACITOR,CHIP CERAMIC 0.1MF
C316	1-107-826-11	s	CAPACITOR,CHIP CERAMIC 0.1MF
C317	1-162-922-11	s	CAPACITOR,CERAMIC 39PF/50V CH
C318	1-164-380-11	s	CAPACITOR,CERAMIC 51PF CH (M-)
C319	1-107-826-11	s	CAPACITOR,CHIP CERAMIC 0.1MF
C320	1-162-926-11	s	CAPACITOR,CERAMIC 82PF/50V CH
C321	1-162-927-11	s	CAPACITOR,CERAMIC 100PF/50V CH
C322	1-104-608-11	s	CAPACITOR, ELECT 33MF/6.3V
C323	1-162-922-11	s	CAPACITOR,CERAMIC 39PF/50V CH
C324	1-164-380-11	s	CAPACITOR,CERAMIC 51PF CH (M-)
C325	1-107-826-11	s	CAPACITOR,CHIP CERAMIC 0.1MF
C326	1-164-217-11	s	CAPACITOR,CERAMIC 150PF/50V CH
C327	1-162-910-11	s	CAPACITOR,CERAMIC 5PF/50V 1608
C328	1-164-315-11	s	CAPACITOR,CERAMIC 470PF/50V CH
C329	1-107-826-11	s	CAPACITOR,CHIP CERAMIC 0.1MF
C330	1-107-826-11	s	CAPACITOR,CHIP CERAMIC 0.1MF
C331	1-107-826-11	s	CAPACITOR,CHIP CERAMIC 0.1MF
C332	1-107-826-11	s	CAPACITOR,CHIP CERAMIC 0.1MF
C333	*N 1-164-382-11	s	CAPACITOR,CHIP CERAMIC 91PF/50
	*P 1-162-927-11	s	CAPACITOR,CERAMIC 100PF/50V CH
C334	1-164-380-11	s	CAPACITOR,CERAMIC 51PF CH (M-)
C335	1-107-826-11	s	CAPACITOR,CHIP CERAMIC 0.1MF
C336	1-107-826-11	s	CAPACITOR,CHIP CERAMIC 0.1MF
C337	1-107-826-11	s	CAPACITOR,CHIP CERAMIC 0.1MF
C338	1-107-826-11	s	CAPACITOR,CHIP CERAMIC 0.1MF
C339	1-104-608-11	s	CAPACITOR, ELECT 33MF/6.3V
C340	1-164-160-11	s	CAPACITOR,CERAMIC 20PF/50V CH
C341	1-164-380-11	s	CAPACITOR,CERAMIC 51PF CH (M-)
C342	1-107-826-11	s	CAPACITOR,CHIP CERAMIC 0.1MF
C343	1-107-826-11	s	CAPACITOR,CHIP CERAMIC 0.1MF
C344	1-107-826-11	s	CAPACITOR,CHIP CERAMIC 0.1MF
C345	1-107-826-11	s	CAPACITOR,CHIP CERAMIC 0.1MF
C346	1-107-826-11	s	CAPACITOR,CHIP CERAMIC 0.1MF

(DM-123/P BOARD [SUFFIX 14])

Ref. No. or Q'ty	Part No.	SP	Description
C347	1-104-608-11	s	CAPACITOR, ELECT 33MF/6.3V
C348	1-107-826-11	s	CAPACITOR,CHIP CERAMIC 0.1MF
C349	1-107-826-11	s	CAPACITOR,CHIP CERAMIC 0.1MF
C350	1-107-826-11	s	CAPACITOR,CHIP CERAMIC 0.1MF
C351	1-107-826-11	s	CAPACITOR,CHIP CERAMIC 0.1MF
C352	1-164-315-11	s	CAPACITOR,CERAMIC 470PF/50V CH
C353	1-164-315-11	s	CAPACITOR,CERAMIC 470PF/50V CH
C354	1-107-826-11	s	CAPACITOR,CHIP CERAMIC 0.1MF
C355	1-107-826-11	s	CAPACITOR,CHIP CERAMIC 0.1MF
C356	1-107-826-11	s	CAPACITOR,CHIP CERAMIC 0.1MF
C357	1-107-826-11	s	CAPACITOR,CHIP CERAMIC 0.1MF
C358	1-162-927-11	s	CAPACITOR,CERAMIC 100PF/50V CH
C359	1-164-217-11	s	CAPACITOR,CERAMIC 150PF/50V CH
C360	1-107-826-11	s	CAPACITOR,CHIP CERAMIC 0.1MF
C361	1-107-826-11	s	CAPACITOR,CHIP CERAMIC 0.1MF
C362	1-107-826-11	s	CAPACITOR,CHIP CERAMIC 0.1MF
C363	1-107-826-11	s	CAPACITOR,CHIP CERAMIC 0.1MF
C364	1-107-826-11	s	CAPACITOR,CHIP CERAMIC 0.1MF
C365	1-107-826-11	s	CAPACITOR,CHIP CERAMIC 0.1MF
C366	1-107-826-11	s	CAPACITOR,CHIP CERAMIC 0.1MF
C367	1-107-826-11	s	CAPACITOR,CHIP CERAMIC 0.1MF
C368	1-107-826-11	s	CAPACITOR,CHIP CERAMIC 0.1MF
C369	1-162-913-11	s	CAPACITOR,CHIP CERAMIC 8PF/50V
C370	1-126-391-11	s	CAPACITOR ELECT 47MF/6.3V(105)
C371	1-162-913-11	s	CAPACITOR,CHIP CERAMIC 8PF/50V
C372	1-104-608-11	s	CAPACITOR, ELECT 33MF/6.3V
C373	1-107-826-11	s	CAPACITOR,CHIP CERAMIC 0.1MF
C374	1-107-826-11	s	CAPACITOR,CHIP CERAMIC 0.1MF
C375	1-107-826-11	s	CAPACITOR,CHIP CERAMIC 0.1MF
C376	1-107-826-11	s	CAPACITOR,CHIP CERAMIC 0.1MF
C377	1-109-982-11	s	CAPACITOR,CHIP CERAMIC 1MF/10V
C378	1-109-982-11	s	CAPACITOR,CHIP CERAMIC 1MF/10V
C379	1-115-416-11	s	CAPACITOR,CERAMIC 1000PF/25V
C380	1-162-913-11	s	CAPACITOR,CHIP CERAMIC 8PF/50V
C381	1-126-391-11	s	CAPACITOR ELECT 47MF/6.3V(105)
C382	1-107-826-11	s	CAPACITOR,CHIP CERAMIC 0.1MF
C383	1-162-919-11	s	CAPACITOR,CERAMIC 22PF/50V CH
C384	1-107-826-11	s	CAPACITOR,CHIP CERAMIC 0.1MF
C385	1-109-982-11	s	CAPACITOR,CHIP CERAMIC 1MF/10V
C386	1-162-959-11	s	CAPACITOR,CERAMIC 330PF/50V SL
C387	1-162-919-11	s	CAPACITOR,CERAMIC 22PF/50V CH
C388	1-107-826-11	s	CAPACITOR,CHIP CERAMIC 0.1MF
C389	1-107-826-11	s	CAPACITOR,CHIP CERAMIC 0.1MF
C390	1-107-826-11	s	CAPACITOR,CHIP CERAMIC 0.1MF
C391	1-162-909-11	s	CAPACITOR,CERAMIC 4PF/50V CH
C392	1-162-915-11	s	CAPACITOR,CERAMIC 10PF/50V CH
C502	1-107-689-21	s	CAPACITOR,TANTALUM 1MF/35V
C503	1-107-826-11	s	CAPACITOR,CHIP CERAMIC 0.1MF
C504	1-104-608-11	s	CAPACITOR, ELECT 33MF/6.3V
C505	1-107-826-11	s	CAPACITOR,CHIP CERAMIC 0.1MF
C506	1-107-826-11	s	CAPACITOR,CHIP CERAMIC 0.1MF
C507	1-107-826-11	s	CAPACITOR,CHIP CERAMIC 0.1MF
C508	1-107-826-11	s	CAPACITOR,CHIP CERAMIC 0.1MF
C509	1-107-826-11	s	CAPACITOR,CHIP CERAMIC 0.1MF
C510	1-107-826-11	s	CAPACITOR,CHIP CERAMIC 0.1MF
C511	1-107-826-11	s	CAPACITOR,CHIP CERAMIC 0.1MF
C512	1-107-826-11	s	CAPACITOR,CHIP CERAMIC 0.1MF
C513	1-107-826-11	s	CAPACITOR,CHIP CERAMIC 0.1MF
C514	1-131-999-11	s	CAPACITOR,SOLID ELECT 150MF

(DM-123/P BOARD [SUFFIX 14])

Ref. No. or Q'ty	Part No.	SP	Description
C515	1-164-227-11	s	CAPACITOR,CERAMIC 0.022MF/25V
C516	1-107-826-11	s	CAPACITOR,CHIP CERAMIC 0.1MF
C517	1-107-826-11	s	CAPACITOR,CHIP CERAMIC 0.1MF
C518	1-104-851-11	s	CAPACITOR,TANTALUM 10MF/10V
C519	1-126-391-11	s	CAPACITOR ELECT 47MF/6.3V(105)
C520	1-126-392-11	s	CAPACITOR,CHIP ELECT100MF/6.3V
C521	1-104-922-21	s	CAPACITOR,MINITURE MOLDMICA
C522	1-107-826-11	s	CAPACITOR,CHIP CERAMIC 0.1MF
C523	1-126-392-11	s	CAPACITOR,CHIP ELECT100MF/6.3V
C524	1-126-391-11	s	CAPACITOR ELECT 47MF/6.3V(105)
C525	1-113-987-11	s	CAPACITOR TANTALUM 4.7MF/25V
C526	1-162-908-11	s	CAPACITOR,CERAMIC 3PF/50V 1608
C527	1-162-909-11	s	CAPACITOR,CERAMIC 4PF/50V CH
C528	1-162-909-11	s	CAPACITOR,CERAMIC 4PF/50V CH
C529	1-164-238-11	s	CAPACITOR,CERAMIC 36PF/50V CH
C530	1-164-379-11	s	CAPACITOR,CERAMIC 43PF/50V CH
C532	1-107-826-11	s	CAPACITOR,CHIP CERAMIC 0.1MF
C533	1-104-852-11	s	CAPACITOR,TANTALUM 22MF/10V
C534	1-125-838-11	s	CAPACITOR, CERAMIC 2.2MF/6.3V
C535	*P 1-107-826-11	s	CAPACITOR,CHIP CERAMIC 0.1MF
C536	*P 1-107-826-11	s	CAPACITOR,CHIP CERAMIC 0.1MF
C537	1-107-826-11	s	CAPACITOR,CHIP CERAMIC 0.1MF
C538	1-131-999-11	s	CAPACITOR,SOLID ELECT 150MF
C539	1-104-851-11	s	CAPACITOR,TANTALUM 10MF/10V
C540	1-107-826-11	s	CAPACITOR,CHIP CERAMIC 0.1MF
C543	1-107-826-11	s	CAPACITOR,CHIP CERAMIC 0.1MF
C546	*P 1-107-826-11	s	CAPACITOR,CHIP CERAMIC 0.1MF
C547	*P 1-107-826-11	s	CAPACITOR,CHIP CERAMIC 0.1MF
C548	*P 1-107-826-11	s	CAPACITOR,CHIP CERAMIC 0.1MF
C549	*P 1-107-826-11	s	CAPACITOR,CHIP CERAMIC 0.1MF
C550	1-107-826-11	s	CAPACITOR,CHIP CERAMIC 0.1MF
C551	1-107-826-11	s	CAPACITOR,CHIP CERAMIC 0.1MF
C552	1-107-826-11	s	CAPACITOR,CHIP CERAMIC 0.1MF
C553	1-107-826-11	s	CAPACITOR,CHIP CERAMIC 0.1MF
C554	1-107-826-11	s	CAPACITOR,CHIP CERAMIC 0.1MF
C555	1-107-826-11	s	CAPACITOR,CHIP CERAMIC 0.1MF
C556	1-107-826-11	s	CAPACITOR,CHIP CERAMIC 0.1MF
C557	1-126-393-11	s	CAPACITOR ELECT 33MF/10V(CHIP)
C558	1-107-826-11	s	CAPACITOR,CHIP CERAMIC 0.1MF
C559	1-162-916-11	s	CAPACITOR,CERAMIC 12PF/50V CH
C562	1-131-999-11	s	CAPACITOR,SOLID ELECT 150MF
C563	1-131-999-11	s	CAPACITOR,SOLID ELECT 150MF
C565	1-107-826-11	s	CAPACITOR,CHIP CERAMIC 0.1MF
C567	*N 1-162-921-11	s	CAPACITOR,CERAMIC 33PF/50V CH
	*P 1-162-927-11	s	CAPACITOR,CERAMIC 100PF/50V CH
C568	1-107-826-11	s	CAPACITOR,CHIP CERAMIC 0.1MF
C570	1-107-826-11	s	CAPACITOR,CHIP CERAMIC 0.1MF
C701	1-107-826-11	s	CAPACITOR,CHIP CERAMIC 0.1MF
C702	1-107-826-11	s	CAPACITOR,CHIP CERAMIC 0.1MF
C704	1-164-227-11	s	CAPACITOR,CERAMIC 0.022MF/25V
C705	1-107-826-11	s	CAPACITOR,CHIP CERAMIC 0.1MF
C706	1-126-391-11	s	CAPACITOR ELECT 47MF/6.3V(105)
C707	1-126-392-11	s	CAPACITOR,CHIP ELECT100MF/6.3V
C708	1-104-922-21	s	CAPACITOR,MINITURE MOLDMICA
C709	1-113-987-11	s	CAPACITOR TANTALUM 4.7MF/25V
C710	1-126-391-11	s	CAPACITOR ELECT 47MF/6.3V(105)
C711	1-107-826-11	s	CAPACITOR,CHIP CERAMIC 0.1MF
C712	1-126-392-11	s	CAPACITOR,CHIP ELECT100MF/6.3V
C713	1-107-826-11	s	CAPACITOR,CHIP CERAMIC 0.1MF

(DM-123/P BOARD [SUFFIX 14])

Ref. No. or Q'ty	Part No.	SP	Description
C714	1-107-826-11	s	CAPACITOR,CHIP CERAMIC 0.1MF
C715	1-162-927-11	s	CAPACITOR,CERAMIC 100PF/50V CH
C716	1-131-998-11	s	CAP, SOLID ELECT 82MF 6.3 V
C717	1-107-826-11	s	CAPACITOR,CHIP CERAMIC 0.1MF
C718	1-104-852-11	s	CAPACITOR,TANTALUM 22MF/10V
C719	1-125-838-11	s	CAPACITOR, CERAMIC 2.2MF/6.3V
C720	1-107-826-11	s	CAPACITOR,CHIP CERAMIC 0.1MF
C721	1-131-998-11	s	CAP, SOLID ELECT 82MF 6.3 V
C722	1-107-689-21	s	CAPACITOR,TANTALUM 1MF/35V
C723	1-107-826-11	s	CAPACITOR,CHIP CERAMIC 0.1MF
C724	1-107-826-11	s	CAPACITOR,CHIP CERAMIC 0.1MF
C725	1-107-826-11	s	CAPACITOR,CHIP CERAMIC 0.1MF
C726	1-107-826-11	s	CAPACITOR,CHIP CERAMIC 0.1MF
C727	1-107-826-11	s	CAPACITOR,CHIP CERAMIC 0.1MF
C728	1-107-826-11	s	CAPACITOR,CHIP CERAMIC 0.1MF
C729	1-107-826-11	s	CAPACITOR,CHIP CERAMIC 0.1MF
C730	1-107-826-11	s	CAPACITOR,CHIP CERAMIC 0.1MF
C731	1-107-826-11	s	CAPACITOR,CHIP CERAMIC 0.1MF
C732	1-107-826-11	s	CAPACITOR,CHIP CERAMIC 0.1MF
C733	1-107-826-11	s	CAPACITOR,CHIP CERAMIC 0.1MF
C734	1-126-393-11	s	CAPACITOR ELECT 33MF/10V(CHIP)
C735	1-107-826-11	s	CAPACITOR,CHIP CERAMIC 0.1MF
C736	1-162-916-11	s	CAPACITOR,CERAMIC 12PF/50V CH
C737	1-104-608-11	s	CAPACITOR, ELECT 33MF/6.3V
C738	1-107-826-11	s	CAPACITOR,CHIP CERAMIC 0.1MF
C739	1-131-998-11	s	CAP, SOLID ELECT 82MF 6.3 V
C740	1-131-998-11	s	CAP, SOLID ELECT 82MF 6.3 V
C744	1-162-908-11	s	CAPACITOR,CERAMIC 3PF/50V 1608
C901	1-162-919-11	s	CAPACITOR,CERAMIC 22PF/50V CH
C902	1-107-826-11	s	CAPACITOR,CHIP CERAMIC 0.1MF
C903	1-104-608-11	s	CAPACITOR, ELECT 33MF/6.3V
C904	1-107-826-11	s	CAPACITOR,CHIP CERAMIC 0.1MF
C905	1-107-826-11	s	CAPACITOR,CHIP CERAMIC 0.1MF
C906	1-107-826-11	s	CAPACITOR,CHIP CERAMIC 0.1MF
C907	1-107-826-11	s	CAPACITOR,CHIP CERAMIC 0.1MF
C908	1-107-826-11	s	CAPACITOR,CHIP CERAMIC 0.1MF
C909	1-162-919-11	s	CAPACITOR,CERAMIC 22PF/50V CH
C910	1-162-919-11	s	CAPACITOR,CERAMIC 22PF/50V CH
C911	1-104-608-11	s	CAPACITOR, ELECT 33MF/6.3V
C912	1-104-608-11	s	CAPACITOR, ELECT 33MF/6.3V
C913	1-107-826-11	s	CAPACITOR,CHIP CERAMIC 0.1MF
C914	1-107-826-11	s	CAPACITOR,CHIP CERAMIC 0.1MF
C915	1-107-826-11	s	CAPACITOR,CHIP CERAMIC 0.1MF
C916	1-107-826-11	s	CAPACITOR,CHIP CERAMIC 0.1MF
C917	1-164-227-11	s	CAPACITOR,CERAMIC 0.022MF/25V
C918	1-164-227-11	s	CAPACITOR,CERAMIC 0.022MF/25V
C919	1-107-826-11	s	CAPACITOR,CHIP CERAMIC 0.1MF
C920	1-164-315-11	s	CAPACITOR,CERAMIC 470PF/50V CH
C921	1-107-826-11	s	CAPACITOR,CHIP CERAMIC 0.1MF
C922	1-107-826-11	s	CAPACITOR,CHIP CERAMIC 0.1MF
C923	1-107-826-11	s	CAPACITOR,CHIP CERAMIC 0.1MF
C924	1-107-826-11	s	CAPACITOR,CHIP CERAMIC 0.1MF
C925	1-162-919-11	s	CAPACITOR,CERAMIC 22PF/50V CH
C926	1-107-826-11	s	CAPACITOR,CHIP CERAMIC 0.1MF
C927	1-126-392-11	s	CAPACITOR,CHIP ELECT100MF/6.3V
C928	1-126-392-11	s	CAPACITOR,CHIP ELECT100MF/6.3V
C929	1-126-393-11	s	CAPACITOR ELECT 33MF/10V(CHIP)
C930	1-107-826-11	s	CAPACITOR,CHIP CERAMIC 0.1MF
C931	1-107-826-11	s	CAPACITOR,CHIP CERAMIC 0.1MF

(DM-123/P BOARD [SUFFIX 14])

Ref. No. or Q'ty	Part No.	SP	Description
C932	1-107-826-11	s	CAPACITOR,CHIP CERAMIC 0.1MF
C933	1-126-391-11	s	CAPACITOR ELECT 47MF/6.3V(105)
C934	1-107-826-11	s	CAPACITOR,CHIP CERAMIC 0.1MF
C935	1-107-826-11	s	CAPACITOR,CHIP CERAMIC 0.1MF
C936	1-107-826-11	s	CAPACITOR,CHIP CERAMIC 0.1MF
C937	1-107-826-11	s	CAPACITOR,CHIP CERAMIC 0.1MF
C938	1-107-826-11	s	CAPACITOR,CHIP CERAMIC 0.1MF
C939	1-107-826-11	s	CAPACITOR,CHIP CERAMIC 0.1MF
C940	1-107-826-11	s	CAPACITOR,CHIP CERAMIC 0.1MF
C941	1-126-391-11	s	CAPACITOR ELECT 47MF/6.3V(105)
C942	1-107-826-11	s	CAPACITOR,CHIP CERAMIC 0.1MF
C943	1-126-391-11	s	CAPACITOR ELECT 47MF/6.3V(105)
C944	1-107-826-11	s	CAPACITOR,CHIP CERAMIC 0.1MF
C945	1-126-391-11	s	CAPACITOR ELECT 47MF/6.3V(105)
C946	1-107-826-11	s	CAPACITOR,CHIP CERAMIC 0.1MF
C947	1-126-391-11	s	CAPACITOR ELECT 47MF/6.3V(105)
C949	1-107-826-11	s	CAPACITOR,CHIP CERAMIC 0.1MF
C950	1-107-826-11	s	CAPACITOR,CHIP CERAMIC 0.1MF
C951	1-107-826-11	s	CAPACITOR,CHIP CERAMIC 0.1MF
C952	1-107-826-11	s	CAPACITOR,CHIP CERAMIC 0.1MF
C953	1-107-826-11	s	CAPACITOR,CHIP CERAMIC 0.1MF
C961	1-107-826-11	s	CAPACITOR,CHIP CERAMIC 0.1MF
C962	1-107-826-11	s	CAPACITOR,CHIP CERAMIC 0.1MF
C963	1-135-870-91	s	CAPACITOR, TANTALUM 2.2MF/16V
C964	1-162-923-11	s	CAPACITOR,CERAMIC 47PF/50V CH
C965	1-162-923-11	s	CAPACITOR,CERAMIC 47PF/50V CH
C966	1-107-826-11	s	CAPACITOR,CHIP CERAMIC 0.1MF
C967	1-162-970-11	s	CAPACITOR CERAMIC 0.01MF/25V B
C968	1-107-826-11	s	CAPACITOR,CHIP CERAMIC 0.1MF
C969	1-104-851-11	s	CAPACITOR,TANTALUM 10MF/10V
C970	1-107-826-11	s	CAPACITOR,CHIP CERAMIC 0.1MF
C971	1-107-826-11	s	CAPACITOR,CHIP CERAMIC 0.1MF
C972	1-107-826-11	s	CAPACITOR,CHIP CERAMIC 0.1MF
C973	1-135-343-11	s	CAPACITOR,SOLID ELECT 120MF
C974	1-107-826-11	s	CAPACITOR,CHIP CERAMIC 0.1MF
C975	1-107-826-11	s	CAPACITOR,CHIP CERAMIC 0.1MF
C976	1-107-826-11	s	CAPACITOR,CHIP CERAMIC 0.1MF
C977	1-107-826-11	s	CAPACITOR,CHIP CERAMIC 0.1MF
C978	1-107-826-11	s	CAPACITOR,CHIP CERAMIC 0.1MF
C979	1-107-826-11	s	CAPACITOR,CHIP CERAMIC 0.1MF
C980	1-107-826-11	s	CAPACITOR,CHIP CERAMIC 0.1MF
C981	1-107-826-11	s	CAPACITOR,CHIP CERAMIC 0.1MF
C982	1-107-826-11	s	CAPACITOR,CHIP CERAMIC 0.1MF
C983	1-131-998-11	s	CAP, SOLID ELECT 82MF 6.3 V
C984	1-131-998-11	s	CAP, SOLID ELECT 82MF 6.3 V
C985	1-131-998-11	s	CAP, SOLID ELECT 82MF 6.3 V
C986	1-131-998-11	s	CAP, SOLID ELECT 82MF 6.3 V
C987	1-131-998-11	s	CAP, SOLID ELECT 82MF 6.3 V
C988	1-131-998-11	s	CAP, SOLID ELECT 82MF 6.3 V
C989	1-113-985-11	s	CAPACITOR,TANTALUM 10MF/20V
C990	1-113-985-11	s	CAPACITOR,TANTALUM 10MF/20V
C991	1-107-826-11	s	CAPACITOR,CHIP CERAMIC 0.1MF
C1102	1-113-987-11	s	CAPACITOR TANTALUM 4.7MF/25V
C1103	1-107-826-11	s	CAPACITOR,CHIP CERAMIC 0.1MF
C1104	1-107-826-11	s	CAPACITOR,CHIP CERAMIC 0.1MF
C1105	1-107-826-11	s	CAPACITOR,CHIP CERAMIC 0.1MF
C1106	1-135-341-11	s	CAPACITOR,SOLID ELECT 330MF
C1107 *N	1-162-925-11	s	CAPACITOR,CERAMIC 68PF/50V CH
*P	1-162-927-11	s	CAPACITOR,CERAMIC 100PF/50V CH

(DM-123/P BOARD [SUFFIX 14])

Ref. No. or Q'ty	Part No.	SP	Description
C1108	1-110-501-11	s	CAPACITOR CERAMIC 0.33MF/16V
C1109	1-135-341-11	s	CAPACITOR,SOLID ELECT 330MF
C1110	1-115-416-11	s	CAPACITOR,CERAMIC 1000PF/25V
C1111	1-107-826-11	s	CAPACITOR,CHIP CERAMIC 0.1MF
C1112	1-107-826-11	s	CAPACITOR,CHIP CERAMIC 0.1MF
C1114	1-107-826-11	s	CAPACITOR,CHIP CERAMIC 0.1MF
C1116	1-104-851-11	s	CAPACITOR,TANTALUM 10MF/10V
C1117	1-104-851-11	s	CAPACITOR,TANTALUM 10MF/10V
C1118	1-104-852-11	s	CAPACITOR,TANTALUM 22MF/10V
C1119	1-107-689-21	s	CAPACITOR,TANTALUM 1MF/35V
C1121	1-162-970-11	s	CAPACITOR CERAMIC 0.01MF/25V B
C1122	1-104-852-11	s	CAPACITOR,TANTALUM 22MF/10V
C1125	1-162-928-11	s	CAPACITOR,CERAMIC 120PF/50V CH
C1126	1-131-999-11	s	CAPACITOR,SOLID ELECT 150MF
C1128	1-162-915-11	s	CAPACITOR,CERAMIC 10PF/50V CH
C1131	1-131-999-11	s	CAPACITOR,SOLID ELECT 150MF
C1132	1-107-826-11	s	CAPACITOR,CHIP CERAMIC 0.1MF
C1133	1-107-826-11	s	CAPACITOR,CHIP CERAMIC 0.1MF
C1134	1-107-826-11	s	CAPACITOR,CHIP CERAMIC 0.1MF
C1135	1-162-927-11	s	CAPACITOR,CERAMIC 100PF/50V CH
C1138	1-119-751-11	s	CAPACITOR,TANTALUM 22MF/16V
C1139	1-119-751-11	s	CAPACITOR,TANTALUM 22MF/16V
C1140	1-107-826-11	s	CAPACITOR,CHIP CERAMIC 0.1MF
C1141	1-107-826-11	s	CAPACITOR,CHIP CERAMIC 0.1MF
C1142	1-107-826-11	s	CAPACITOR,CHIP CERAMIC 0.1MF
C1143	1-119-751-11	s	CAPACITOR,TANTALUM 22MF/16V
C1144	1-119-751-11	s	CAPACITOR,TANTALUM 22MF/16V
C1145	1-119-751-11	s	CAPACITOR,TANTALUM 22MF/16V
C1148	1-107-826-11	s	CAPACITOR,CHIP CERAMIC 0.1MF
C1201	1-131-999-11	s	CAPACITOR,SOLID ELECT 150MF
C1202	1-113-987-11	s	CAPACITOR TANTALUM 4.7MF/25V
C1203	1-107-826-11	s	CAPACITOR,CHIP CERAMIC 0.1MF
C1204	1-107-826-11	s	CAPACITOR,CHIP CERAMIC 0.1MF
C1205	1-110-501-11	s	CAPACITOR CERAMIC 0.33MF/16V
C1206	1-107-826-11	s	CAPACITOR,CHIP CERAMIC 0.1MF
C1207	1-115-416-11	s	CAPACITOR,CERAMIC 1000PF/25V
C1209	1-107-826-11	s	CAPACITOR,CHIP CERAMIC 0.1MF
C1210	1-107-826-11	s	CAPACITOR,CHIP CERAMIC 0.1MF
C1211	1-107-826-11	s	CAPACITOR,CHIP CERAMIC 0.1MF
C1212	1-104-851-11	s	CAPACITOR,TANTALUM 10MF/10V
C1213	1-104-851-11	s	CAPACITOR,TANTALUM 10MF/10V
C1214	1-104-852-11	s	CAPACITOR,TANTALUM 22MF/10V
C1215	1-107-689-21	s	CAPACITOR,TANTALUM 1MF/35V
C1217	1-162-970-11	s	CAPACITOR CERAMIC 0.01MF/25V B
C1218	1-107-826-11	s	CAPACITOR,CHIP CERAMIC 0.1MF
C1220	1-162-928-11	s	CAPACITOR,CERAMIC 120PF/50V CH
C1222	1-162-915-11	s	CAPACITOR,CERAMIC 10PF/50V CH
C1227	1-107-826-11	s	CAPACITOR,CHIP CERAMIC 0.1MF
C1228	1-107-826-11	s	CAPACITOR,CHIP CERAMIC 0.1MF
C1229	1-107-826-11	s	CAPACITOR,CHIP CERAMIC 0.1MF
C1230	1-164-217-11	s	CAPACITOR,CERAMIC 150PF/50V CH
C1233	1-119-751-11	s	CAPACITOR,TANTALUM 22MF/16V
C1234	1-119-751-11	s	CAPACITOR,TANTALUM 22MF/16V
C1235	1-107-826-11	s	CAPACITOR,CHIP CERAMIC 0.1MF
C1236	1-107-826-11	s	CAPACITOR,CHIP CERAMIC 0.1MF
C1237	1-107-826-11	s	CAPACITOR,CHIP CERAMIC 0.1MF
C1238	1-131-999-11	s	CAPACITOR,SOLID ELECT 150MF
C1301	1-104-608-11	s	CAPACITOR, ELECT 33MF/6.3V
C1302	1-104-608-11	s	CAPACITOR, ELECT 33MF/6.3V

(DM-123/P BOARD [SUFFIX 14])

Ref. No. or Q'ty	Part No.	SP	Description
C1303	1-107-826-11	s	CAPACITOR,CHIP CERAMIC 0.1MF
C1304	1-107-826-11	s	CAPACITOR,CHIP CERAMIC 0.1MF
C1305	1-162-917-11	s	CAPACITOR,CERAMIC 15PF/50V CH
C1306	1-164-227-11	s	CAPACITOR,CERAMIC 0.022MF/25V
C1308	1-107-826-11	s	CAPACITOR,CHIP CERAMIC 0.1MF
C1309	1-107-826-11	s	CAPACITOR,CHIP CERAMIC 0.1MF
C1310	1-162-927-11	s	CAPACITOR,CERAMIC 100PF/50V CH
C1311	1-162-959-11	s	CAPACITOR,CERAMIC 330PF/50V SL
C1312	1-164-315-11	s	CAPACITOR,CERAMIC 470PF/50V CH
C1313	1-107-826-11	s	CAPACITOR,CHIP CERAMIC 0.1MF
C1314	1-164-227-11	s	CAPACITOR,CERAMIC 0.022MF/25V
C1316	1-164-227-11	s	CAPACITOR,CERAMIC 0.022MF/25V
C1317	1-164-227-11	s	CAPACITOR,CERAMIC 0.022MF/25V
C1318	1-164-227-11	s	CAPACITOR,CERAMIC 0.022MF/25V
C1319	1-128-357-11	s	CAPACITOR,ELECT 10MF/16V (BP)
C1320	1-164-227-11	s	CAPACITOR,CERAMIC 0.022MF/25V
C1322	1-104-608-11	s	CAPACITOR, ELECT 33MF/6.3V
C1323	1-107-826-11	s	CAPACITOR,CHIP CERAMIC 0.1MF
C1324	1-107-826-11	s	CAPACITOR,CHIP CERAMIC 0.1MF
C1325	1-107-826-11	s	CAPACITOR,CHIP CERAMIC 0.1MF
C1326	1-162-921-11	s	CAPACITOR,CERAMIC 33PF/50V CH
C1327	1-107-826-11	s	CAPACITOR,CHIP CERAMIC 0.1MF
C1328	1-107-826-11	s	CAPACITOR,CHIP CERAMIC 0.1MF
C1329	1-164-227-11	s	CAPACITOR,CERAMIC 0.022MF/25V
C1330	1-162-921-11	s	CAPACITOR,CERAMIC 33PF/50V CH
C1332	1-107-826-11	s	CAPACITOR,CHIP CERAMIC 0.1MF
C1401	1-109-982-11	s	CAPACITOR,CHIP CERAMIC 1MF/10V
C1402	1-109-982-11	s	CAPACITOR,CHIP CERAMIC 1MF/10V
C1403	1-162-927-11	s	CAPACITOR,CERAMIC 100PF/50V CH
C1404	1-164-315-11	s	CAPACITOR,CERAMIC 470PF/50V CH
C1405	1-107-826-11	s	CAPACITOR,CHIP CERAMIC 0.1MF
C1406	1-164-227-11	s	CAPACITOR,CERAMIC 0.022MF/25V
C1407	1-115-416-11	s	CAPACITOR,CERAMIC 1000PF/25V
C1408	1-164-227-11	s	CAPACITOR,CERAMIC 0.022MF/25V
C1409	1-109-982-11	s	CAPACITOR,CHIP CERAMIC 1MF/10V
C1410	1-107-826-11	s	CAPACITOR,CHIP CERAMIC 0.1MF
C1411	1-107-826-11	s	CAPACITOR,CHIP CERAMIC 0.1MF
C1412	1-109-982-11	s	CAPACITOR,CHIP CERAMIC 1MF/10V
C1413	1-107-826-11	s	CAPACITOR,CHIP CERAMIC 0.1MF
C1414	1-107-826-11	s	CAPACITOR,CHIP CERAMIC 0.1MF
C1415	1-107-826-11	s	CAPACITOR,CHIP CERAMIC 0.1MF
C1416	1-162-927-11	s	CAPACITOR,CERAMIC 100PF/50V CH
C1418	1-107-826-11	s	CAPACITOR,CHIP CERAMIC 0.1MF
C1419	1-164-227-11	s	CAPACITOR,CERAMIC 0.022MF/25V
C1420	1-162-923-11	s	CAPACITOR,CERAMIC 47PF/50V CH
C1421	1-107-826-11	s	CAPACITOR,CHIP CERAMIC 0.1MF
C1422	1-107-826-11	s	CAPACITOR,CHIP CERAMIC 0.1MF
C1423	1-107-826-11	s	CAPACITOR,CHIP CERAMIC 0.1MF
C1425	1-164-315-11	s	CAPACITOR,CERAMIC 470PF/50V CH
C1426	1-162-970-11	s	CAPACITOR CERAMIC 0.01MF/25V B
C1427	1-162-927-11	s	CAPACITOR,CERAMIC 100PF/50V CH
C1428	1-104-608-11	s	CAPACITOR, ELECT 33MF/6.3V
C1429	1-107-826-11	s	CAPACITOR,CHIP CERAMIC 0.1MF
C1430	1-107-826-11	s	CAPACITOR,CHIP CERAMIC 0.1MF
C1432	1-162-927-11	s	CAPACITOR,CERAMIC 100PF/50V CH
C1433	1-162-927-11	s	CAPACITOR,CERAMIC 100PF/50V CH
C1434	1-107-826-11	s	CAPACITOR,CHIP CERAMIC 0.1MF
C1435	1-162-928-11	s	CAPACITOR,CERAMIC 120PF/50V CH
C1436	1-107-826-11	s	CAPACITOR,CHIP CERAMIC 0.1MF

(DM-123/P BOARD [SUFFIX 14])

Ref. No. or Q'ty	Part No.	SP	Description
C1437	1-162-927-11	s	CAPACITOR,CERAMIC 100PF/50V CH
C1438	1-107-826-11	s	CAPACITOR,CHIP CERAMIC 0.1MF
C1439	1-107-826-11	s	CAPACITOR,CHIP CERAMIC 0.1MF
C1440	1-107-826-11	s	CAPACITOR,CHIP CERAMIC 0.1MF
C1441	1-107-826-11	s	CAPACITOR,CHIP CERAMIC 0.1MF
C1442	1-126-392-11	s	CAPACITOR,CHIP ELECT100MF/6.3V
C1443	1-109-982-11	s	CAPACITOR,CHIP CERAMIC 1MF/10V
C1444	1-110-501-11	s	CAPACITOR CERAMIC 0.33MF/16V
C1446	1-162-927-11	s	CAPACITOR,CERAMIC 100PF/50V CH
C1449	1-125-838-11	s	CAPACITOR, CERAMIC 2.2MF/6.3V
C1450	1-110-501-11	s	CAPACITOR CERAMIC 0.33MF/16V
C1457	1-107-826-11	s	CAPACITOR,CHIP CERAMIC 0.1MF
C1458	1-104-608-11	s	CAPACITOR, ELECT 33MF/6.3V
C1459	1-115-416-11	s	CAPACITOR,CERAMIC 1000PF/25V
C1460	1-107-826-11	s	CAPACITOR,CHIP CERAMIC 0.1MF
C1461	1-107-826-11	s	CAPACITOR,CHIP CERAMIC 0.1MF
C1462	1-104-608-11	s	CAPACITOR, ELECT 33MF/6.3V
C1463	1-107-826-11	s	CAPACITOR,CHIP CERAMIC 0.1MF
C1464	1-107-826-11	s	CAPACITOR,CHIP CERAMIC 0.1MF
C1468	1-107-826-11	s	CAPACITOR,CHIP CERAMIC 0.1MF
C1469	1-107-826-11	s	CAPACITOR,CHIP CERAMIC 0.1MF
C1470	1-107-826-11	s	CAPACITOR,CHIP CERAMIC 0.1MF
C1471	1-164-227-11	s	CAPACITOR,CERAMIC 0.022MF/25V
C1472	1-107-826-11	s	CAPACITOR,CHIP CERAMIC 0.1MF
C1480	1-164-227-11	s	CAPACITOR,CERAMIC 0.022MF/25V
C1481	1-164-227-11	s	CAPACITOR,CERAMIC 0.022MF/25V
C1482	1-107-826-11	s	CAPACITOR,CHIP CERAMIC 0.1MF
C1501	1-104-608-11	s	CAPACITOR, ELECT 33MF/6.3V
C1502	1-104-608-11	s	CAPACITOR, ELECT 33MF/6.3V
C1503	1-107-826-11	s	CAPACITOR,CHIP CERAMIC 0.1MF
C1504	1-107-826-11	s	CAPACITOR,CHIP CERAMIC 0.1MF
C1505	1-164-227-11	s	CAPACITOR,CERAMIC 0.022MF/25V
C1507	1-107-826-11	s	CAPACITOR,CHIP CERAMIC 0.1MF
C1508	1-107-826-11	s	CAPACITOR,CHIP CERAMIC 0.1MF
C1509	1-162-917-11	s	CAPACITOR,CERAMIC 15PF/50V CH
C1510	1-162-919-11	s	CAPACITOR,CERAMIC 22PF/50V CH
C1511	1-162-928-11	s	CAPACITOR,CERAMIC 120PF/50V CH
C1512	1-162-959-11	s	CAPACITOR,CERAMIC 330PF/50V SL
C1513	1-162-915-11	s	CAPACITOR,CERAMIC 10PF/50V CH
C1514	1-162-910-11	s	CAPACITOR,CERAMIC 5PF/50V 1608
C1515	1-162-916-11	s	CAPACITOR,CERAMIC 12PF/50V CH
C1516	1-107-826-11	s	CAPACITOR,CHIP CERAMIC 0.1MF
C1517	1-162-916-11	s	CAPACITOR,CERAMIC 12PF/50V CH
C1518	1-162-923-11	s	CAPACITOR,CERAMIC 47PF/50V CH
C1519	1-164-227-11	s	CAPACITOR,CERAMIC 0.022MF/25V
C1521	1-107-826-11	s	CAPACITOR,CHIP CERAMIC 0.1MF
C1522	1-164-227-11	s	CAPACITOR,CERAMIC 0.022MF/25V
C1523	1-164-227-11	s	CAPACITOR,CERAMIC 0.022MF/25V
C1524	1-164-227-11	s	CAPACITOR,CERAMIC 0.022MF/25V
C1525	1-128-357-11	s	CAPACITOR,ELECT 10MF/16V (BP)
C1526	1-164-227-11	s	CAPACITOR,CERAMIC 0.022MF/25V
C1527	1-107-826-11	s	CAPACITOR,CHIP CERAMIC 0.1MF
C1528	1-104-608-11	s	CAPACITOR, ELECT 33MF/6.3V
C1529	1-107-826-11	s	CAPACITOR,CHIP CERAMIC 0.1MF
C1530	1-107-826-11	s	CAPACITOR,CHIP CERAMIC 0.1MF
C1531	1-107-826-11	s	CAPACITOR,CHIP CERAMIC 0.1MF
C1532	1-162-921-11	s	CAPACITOR,CERAMIC 33PF/50V CH
C1533	1-107-826-11	s	CAPACITOR,CHIP CERAMIC 0.1MF
C1534	1-107-826-11	s	CAPACITOR,CHIP CERAMIC 0.1MF

(DM-123/P BOARD [SUFFIX 14])

Ref. No. or Q'ty	Part No.	SP	Description
C1535	1-164-227-11	s	CAPACITOR,CERAMIC 0.022MF/25V
C1536	1-162-921-11	s	CAPACITOR,CERAMIC 33PF/50V CH
C1601	1-109-982-11	s	CAPACITOR,CHIP CERAMIC 1MF/10V
C1602	1-107-826-11	s	CAPACITOR,CHIP CERAMIC 0.1MF
C1604	1-162-915-11	s	CAPACITOR,CERAMIC 10PF/50V CH
C1605	1-162-923-11	s	CAPACITOR,CERAMIC 47PF/50V CH
C1607	1-107-826-11	s	CAPACITOR,CHIP CERAMIC 0.1MF
C1608	1-164-230-11	s	CAPACITOR,CERAMIC 220PF/50V
C1610	1-162-923-11	s	CAPACITOR,CERAMIC 47PF/50V CH
C1611	1-107-826-11	s	CAPACITOR,CHIP CERAMIC 0.1MF
C1612	1-162-970-11	s	CAPACITOR CERAMIC 0.01MF/25V B
C1613	1-115-416-11	s	CAPACITOR,CERAMIC 1000PF/25V
C1615	1-109-982-11	s	CAPACITOR,CHIP CERAMIC 1MF/10V
C1616	1-107-826-11	s	CAPACITOR,CHIP CERAMIC 0.1MF
C1617	1-107-826-11	s	CAPACITOR,CHIP CERAMIC 0.1MF
C1618	1-109-982-11	s	CAPACITOR,CHIP CERAMIC 1MF/10V
C1619	1-107-826-11	s	CAPACITOR,CHIP CERAMIC 0.1MF
C1620	1-107-826-11	s	CAPACITOR,CHIP CERAMIC 0.1MF
C1622	1-162-927-11	s	CAPACITOR,CERAMIC 100PF/50V CH
C1623	1-164-227-11	s	CAPACITOR,CERAMIC 0.022MF/25V
C1624	1-107-826-11	s	CAPACITOR,CHIP CERAMIC 0.1MF
C1625	1-162-923-11	s	CAPACITOR,CERAMIC 47PF/50V CH
C1626	1-107-826-11	s	CAPACITOR,CHIP CERAMIC 0.1MF
C1627	1-162-928-11	s	CAPACITOR,CERAMIC 120PF/50V CH
C1628	1-162-970-11	s	CAPACITOR CERAMIC 0.01MF/25V B
C1630	1-107-826-11	s	CAPACITOR,CHIP CERAMIC 0.1MF
C1631	1-162-927-11	s	CAPACITOR,CERAMIC 100PF/50V CH
C1632	1-104-608-11	s	CAPACITOR, ELECT 33MF/6.3V
C1633	1-107-826-11	s	CAPACITOR,CHIP CERAMIC 0.1MF
C1634	1-162-927-11	s	CAPACITOR,CERAMIC 100PF/50V CH
C1635	1-162-927-11	s	CAPACITOR,CERAMIC 100PF/50V CH
C1636	1-107-826-11	s	CAPACITOR,CHIP CERAMIC 0.1MF
C1637	1-162-928-11	s	CAPACITOR,CERAMIC 120PF/50V CH
C1638	1-107-826-11	s	CAPACITOR,CHIP CERAMIC 0.1MF
C1639	1-162-927-11	s	CAPACITOR,CERAMIC 100PF/50V CH
C1640	1-107-826-11	s	CAPACITOR,CHIP CERAMIC 0.1MF
C1641	1-107-826-11	s	CAPACITOR,CHIP CERAMIC 0.1MF
C1642	1-107-826-11	s	CAPACITOR,CHIP CERAMIC 0.1MF
C1643	1-107-826-11	s	CAPACITOR,CHIP CERAMIC 0.1MF
C1644	1-126-392-11	s	CAPACITOR,CHIP ELECT100MF/6.3V
C1645	1-109-982-11	s	CAPACITOR,CHIP CERAMIC 1MF/10V
C1646	1-110-501-11	s	CAPACITOR CERAMIC 0.33MF/16V
C1647	1-162-927-11	s	CAPACITOR,CERAMIC 100PF/50V CH
C1657	1-115-416-11	s	CAPACITOR,CERAMIC 1000PF/25V
C1658	1-107-826-11	s	CAPACITOR,CHIP CERAMIC 0.1MF
C1659	1-107-826-11	s	CAPACITOR,CHIP CERAMIC 0.1MF
C1661	1-104-608-11	s	CAPACITOR, ELECT 33MF/6.3V
C1662	1-104-608-11	s	CAPACITOR, ELECT 33MF/6.3V
C1663	1-107-826-11	s	CAPACITOR,CHIP CERAMIC 0.1MF
C1664	1-107-826-11	s	CAPACITOR,CHIP CERAMIC 0.1MF
C1665	1-107-826-11	s	CAPACITOR,CHIP CERAMIC 0.1MF
C1666	1-107-826-11	s	CAPACITOR,CHIP CERAMIC 0.1MF
C1667	1-164-227-11	s	CAPACITOR,CERAMIC 0.022MF/25V
C1680	1-107-826-11	s	CAPACITOR,CHIP CERAMIC 0.1MF
C1681	1-107-826-11	s	CAPACITOR,CHIP CERAMIC 0.1MF
C1682	1-107-826-11	s	CAPACITOR,CHIP CERAMIC 0.1MF
C1683	1-125-838-11	s	CAPACITOR, CERAMIC 2.2MF/6.3V
C1684	1-115-340-11	s	CAPACITOR CERAMIC 0.22MF/25V B
C1701	1-107-826-11	s	CAPACITOR,CHIP CERAMIC 0.1MF

(DM-123/P BOARD [SUFFIX 14])

Ref. No. or Q'ty	Part No.	SP	Description
C1702	1-107-826-11	s	CAPACITOR,CHIP CERAMIC 0.1MF
C1703	1-107-826-11	s	CAPACITOR,CHIP CERAMIC 0.1MF
C1704	1-107-826-11	s	CAPACITOR,CHIP CERAMIC 0.1MF
C1705	1-107-826-11	s	CAPACITOR,CHIP CERAMIC 0.1MF
C1706	1-107-826-11	s	CAPACITOR,CHIP CERAMIC 0.1MF
C1707	1-107-826-11	s	CAPACITOR,CHIP CERAMIC 0.1MF
C1708	1-107-826-11	s	CAPACITOR,CHIP CERAMIC 0.1MF
C1709	1-107-826-11	s	CAPACITOR,CHIP CERAMIC 0.1MF
C1710	1-107-826-11	s	CAPACITOR,CHIP CERAMIC 0.1MF
C1711	1-107-826-11	s	CAPACITOR,CHIP CERAMIC 0.1MF
C1712	1-126-391-11	s	CAPACITOR ELECT 47MF/6.3V(105)
C1713	1-107-826-11	s	CAPACITOR,CHIP CERAMIC 0.1MF
C1714	1-126-391-11	s	CAPACITOR ELECT 47MF/6.3V(105)
C1715	1-107-826-11	s	CAPACITOR,CHIP CERAMIC 0.1MF
C1716	1-162-925-11	s	CAPACITOR,CERAMIC 68PF/50V CH
C1717	1-162-925-11	s	CAPACITOR,CERAMIC 68PF/50V CH
C1718	1-162-925-11	s	CAPACITOR,CERAMIC 68PF/50V CH
C1719	1-162-925-11	s	CAPACITOR,CERAMIC 68PF/50V CH
C1720	1-162-925-11	s	CAPACITOR,CERAMIC 68PF/50V CH
C1721	1-162-925-11	s	CAPACITOR,CERAMIC 68PF/50V CH
C1722	1-162-925-11	s	CAPACITOR,CERAMIC 68PF/50V CH
C1723	1-162-925-11	s	CAPACITOR,CERAMIC 68PF/50V CH
C1724	1-162-925-11	s	CAPACITOR,CERAMIC 68PF/50V CH
C1725	1-162-925-11	s	CAPACITOR,CERAMIC 68PF/50V CH
C1726	1-162-925-11	s	CAPACITOR,CERAMIC 68PF/50V CH
C1727	1-162-925-11	s	CAPACITOR,CERAMIC 68PF/50V CH
C1728	1-162-925-11	s	CAPACITOR,CERAMIC 68PF/50V CH
C1729	1-162-925-11	s	CAPACITOR,CERAMIC 68PF/50V CH
C1730	1-162-925-11	s	CAPACITOR,CERAMIC 68PF/50V CH
C1731	1-107-826-11	s	CAPACITOR,CHIP CERAMIC 0.1MF
C1732	1-107-826-11	s	CAPACITOR,CHIP CERAMIC 0.1MF
C1733	1-107-826-11	s	CAPACITOR,CHIP CERAMIC 0.1MF
C1734	1-107-826-11	s	CAPACITOR,CHIP CERAMIC 0.1MF
C1735	1-107-826-11	s	CAPACITOR,CHIP CERAMIC 0.1MF
C1736	1-107-826-11	s	CAPACITOR,CHIP CERAMIC 0.1MF
C1737	1-107-826-11	s	CAPACITOR,CHIP CERAMIC 0.1MF
C1738	1-107-826-11	s	CAPACITOR,CHIP CERAMIC 0.1MF
C1739	1-107-826-11	s	CAPACITOR,CHIP CERAMIC 0.1MF
C1740	1-104-851-11	s	CAPACITOR,TANTALUM 10MF/10V
C1741	1-107-826-11	s	CAPACITOR,CHIP CERAMIC 0.1MF
C1742	1-107-826-11	s	CAPACITOR,CHIP CERAMIC 0.1MF
C1801	1-165-176-11	s	CAPACITOR,CERAMIC 47000PF/16V
C1802	1-107-826-11	s	CAPACITOR,CHIP CERAMIC 0.1MF
C1803	1-107-826-11	s	CAPACITOR,CHIP CERAMIC 0.1MF
C1804	1-107-826-11	s	CAPACITOR,CHIP CERAMIC 0.1MF
C1806	1-107-826-11	s	CAPACITOR,CHIP CERAMIC 0.1MF
C1807	1-107-826-11	s	CAPACITOR,CHIP CERAMIC 0.1MF
C1810	1-162-927-11	s	CAPACITOR,CERAMIC 100PF/50V CH
C1812 *N	1-162-919-11	s	CAPACITOR,CERAMIC 22PF/50V CH
*P	1-162-921-11	s	CAPACITOR,CERAMIC 33PF/50V CH
C1813	1-107-826-11	s	CAPACITOR,CHIP CERAMIC 0.1MF
C1814	1-107-826-11	s	CAPACITOR,CHIP CERAMIC 0.1MF
C1816 *N	1-162-925-11	s	CAPACITOR,CERAMIC 68PF/50V CH
*P	1-162-927-11	s	CAPACITOR,CERAMIC 100PF/50V CH
C1817	1-107-826-11	s	CAPACITOR,CHIP CERAMIC 0.1MF
C1818 *N	1-162-919-11	s	CAPACITOR,CERAMIC 22PF/50V CH
*P	1-162-921-11	s	CAPACITOR,CERAMIC 33PF/50V CH
C1819	1-104-608-11	s	CAPACITOR, ELECT 33MF/6.3V
C1820	1-107-826-11	s	CAPACITOR,CHIP CERAMIC 0.1MF

(DM-123/P BOARD [SUFFIX 14])

Ref. No. or Q'ty	Part No.	SP	Description
C1821	1-107-826-11	s	CAPACITOR,CHIP CERAMIC 0.1MF
C1822 *P	1-107-826-11	s	CAPACITOR,CHIP CERAMIC 0.1MF
C1823 *P	1-162-927-11	s	CAPACITOR,CERAMIC 100PF/50V CH
C1827	1-104-608-11	s	CAPACITOR, ELECT 33MF/6.3V
C1828	1-107-826-11	s	CAPACITOR,CHIP CERAMIC 0.1MF
C1829	1-107-826-11	s	CAPACITOR,CHIP CERAMIC 0.1MF
C1831	1-107-826-11	s	CAPACITOR,CHIP CERAMIC 0.1MF
C1833	1-107-826-11	s	CAPACITOR,CHIP CERAMIC 0.1MF
C1834	1-107-826-11	s	CAPACITOR,CHIP CERAMIC 0.1MF
C1835	1-107-826-11	s	CAPACITOR,CHIP CERAMIC 0.1MF
C1839	1-107-826-11	s	CAPACITOR,CHIP CERAMIC 0.1MF
C1841	1-107-826-11	s	CAPACITOR,CHIP CERAMIC 0.1MF
C1843	1-107-826-11	s	CAPACITOR,CHIP CERAMIC 0.1MF
C1844	1-104-608-11	s	CAPACITOR, ELECT 33MF/6.3V
C1845	1-107-826-11	s	CAPACITOR,CHIP CERAMIC 0.1MF
C1846	1-107-826-11	s	CAPACITOR,CHIP CERAMIC 0.1MF
C1847	1-125-838-11	s	CAPACITOR, CERAMIC 2.2MF/6.3V
C1849	1-107-826-11	s	CAPACITOR,CHIP CERAMIC 0.1MF
C1850	1-107-826-11	s	CAPACITOR,CHIP CERAMIC 0.1MF
C1851	1-107-826-11	s	CAPACITOR,CHIP CERAMIC 0.1MF
C1852	1-104-851-11	s	CAPACITOR,TANTALUM 10MF/10V
C1853	1-104-608-11	s	CAPACITOR, ELECT 33MF/6.3V
C1854	1-107-826-11	s	CAPACITOR,CHIP CERAMIC 0.1MF
C1855	1-107-826-11	s	CAPACITOR,CHIP CERAMIC 0.1MF
C1856	1-107-826-11	s	CAPACITOR,CHIP CERAMIC 0.1MF
C1857	1-107-826-11	s	CAPACITOR,CHIP CERAMIC 0.1MF
C1858	1-107-826-11	s	CAPACITOR,CHIP CERAMIC 0.1MF
C1859	1-107-826-11	s	CAPACITOR,CHIP CERAMIC 0.1MF
C1860	1-162-921-11	s	CAPACITOR,CERAMIC 33PF/50V CH
C1861	1-107-826-11	s	CAPACITOR,CHIP CERAMIC 0.1MF
C1862	1-107-826-11	s	CAPACITOR,CHIP CERAMIC 0.1MF
C1863	1-107-826-11	s	CAPACITOR,CHIP CERAMIC 0.1MF
C1864	1-107-826-11	s	CAPACITOR,CHIP CERAMIC 0.1MF
C1865 *N	1-162-921-11	s	CAPACITOR,CERAMIC 33PF/50V CH
*P	1-162-920-11	s	CAPACITOR,CERAMIC 27PF/50V CH
C1866	1-107-826-11	s	CAPACITOR,CHIP CERAMIC 0.1MF
C1867	1-107-826-11	s	CAPACITOR,CHIP CERAMIC 0.1MF
C1868	1-107-826-11	s	CAPACITOR,CHIP CERAMIC 0.1MF
C1869	1-107-826-11	s	CAPACITOR,CHIP CERAMIC 0.1MF
C1870	1-162-970-11	s	CAPACITOR CERAMIC 0.01MF/25V B
C1871	1-107-826-11	s	CAPACITOR,CHIP CERAMIC 0.1MF
C1872	1-107-826-11	s	CAPACITOR,CHIP CERAMIC 0.1MF
C1873	1-107-826-11	s	CAPACITOR,CHIP CERAMIC 0.1MF
C1874	1-162-970-11	s	CAPACITOR,CERAMIC 10000PF/25V B
C1875	1-164-315-11	s	CAPACITOR,CERAMIC 470PF/50V CH
C1901	1-107-826-11	s	CAPACITOR,CHIP CERAMIC 0.1MF
C1902	1-107-826-11	s	CAPACITOR,CHIP CERAMIC 0.1MF
C1903	1-107-826-11	s	CAPACITOR,CHIP CERAMIC 0.1MF
C1904	1-107-826-11	s	CAPACITOR,CHIP CERAMIC 0.1MF
D101	8-719-941-23	s	DIODE DA204U
D301	8-719-941-23	s	DIODE DA204U
D501	8-719-024-81	s	DIODE 1SS300-TE85L
D502	8-719-024-81	s	DIODE 1SS300-TE85L
D503	8-719-941-23	s	DIODE DA204U
D504	8-719-404-35	s	DIODE MA141WK
D701	8-719-024-81	s	DIODE 1SS300-TE85L
D702	8-719-941-23	s	DIODE DA204U
D703	8-719-404-35	s	DIODE MA141WK
D910	8-719-024-81	s	DIODE 1SS300-TE85L

(DM-123/P BOARD [SUFFIX 14])

Ref. No. or Q'ty	Part No.	SP	Description	
D911	8-719-024-81	s	DIODE 1SS300-TE85L	
D912	8-719-024-81	s	DIODE 1SS300-TE85L	
D913	8-719-024-81	s	DIODE 1SS300-TE85L	
D914	8-719-024-81	s	DIODE 1SS300-TE85L	
D915	8-719-024-81	s	DIODE 1SS300-TE85L	
D916	8-719-024-81	s	DIODE 1SS300-TE85L	
D917	8-719-024-81	s	DIODE 1SS300-TE85L	
D1101	8-719-941-23	s	DIODE DA204U	
D1102	8-719-941-23	s	DIODE DA204U	
D1103	8-719-941-23	s	DIODE DA204U	
D1104	8-719-070-20	s	DIODE RB706F-40	
D1201	8-719-941-23	s	DIODE DA204U	
D1204	8-719-070-20	s	DIODE RB706F-40	
D1301	8-719-941-23	s	DIODE DA204U	
D1401	8-719-941-23	s	DIODE DA204U	
D1402	8-719-941-23	s	DIODE DA204U	
D1403	8-719-941-23	s	DIODE DA204U	
D1404	8-719-941-23	s	DIODE DA204U	
D1405	8-719-041-39	s	DIODE KV1470	(5MA)
D1406	8-719-041-39	s	DIODE KV1470	(5MA)
D1501	8-719-941-23	s	DIODE DA204U	
D1502	8-719-024-81	s	DIODE 1SS300-TE85L	
D1601	8-719-941-23	s	DIODE DA204U	
D1602	8-719-941-23	s	DIODE DA204U	
D1603	8-719-041-39	s	DIODE KV1470	(5MA)
D1604	8-719-041-39	s	DIODE KV1470	(5MA)
D1701	8-719-404-35	s	DIODE MA141WK	
D1705	8-719-024-81	s	DIODE 1SS300-TE85L	
D1706	8-719-404-35	s	DIODE MA141WK	
D1802	8-719-064-52	s	DIODE CL-191YG-CD-T	
D1803	8-719-064-52	s	DIODE CL-191YG-CD-T	
D1804	8-719-941-23	s	DIODE DA204U	
D1805	8-719-404-35	s	DIODE MA141WK	
D1809	8-719-024-81	s	DIODE 1SS300-TE85L	
D1810	8-719-024-81	s	DIODE 1SS300-TE85L	
D1910	8-719-070-20	s	DIODE RB706F-40	
DL101	1-416-645-11	s	DELAY LINE	
DL103	1-416-478-11	s	DELAY LINE	
DL301	1-416-646-11	s	DELAY LINE	
DL303	1-416-480-11	s	DELAY LINE	
FL501 *P	1-234-007-11	s	FILTER, LOW PASS	
FL502	1-234-001-11	s	FILTER, LOW PASS	
FL503	1-234-000-11	s	FILTER, LOW PASS	
FL504 *N	1-234-505-21	s	FILTER, LOW PASS	(4.9MHZ)
*P	1-233-999-11	s	FILTER, LOW PASS	
FL701 *P	1-234-002-11	s	FILTER, LOW PASS	
FL702	1-234-008-11	s	FILTER, LOW PASS	
FL703	1-234-004-11	s	FILTER, LOW PASS	
FL1101	1-234-009-11	s	FILTER, LOW PASS	
FL1201	1-234-003-11	s	FILTER, LOW PASS	
FL1800	1-233-674-21	s	FILTER, EMI	
FL1801	1-233-674-21	s	FILTER, EMI	
IC101	8-752-052-75	s	IC CXA1479Q	
IC102	8-759-523-02	s	IC TC74HC4053AFT(EL)	
IC103	8-759-112-53	s	IC UPC1663G	
IC104	8-759-485-79	s	IC TC7SET08FU	(TE85L)
IC105	8-752-052-73	s	IC CXA1451M	

(DM-123/P BOARD [SUFFIX 14])

Ref. No. or Q'ty	Part No.	SP	Description	
IC106	8-759-564-49	s	IC TC7W53FU-TE12R	
IC107	8-752-068-24	s	IC CXA1450M-TH	
IC108	8-759-669-74	s	IC TL084CPWR-12	
IC109	8-759-082-58	s	IC TC7W08FU	
IC301	8-759-082-59	s	IC TC7W32FU	
IC302	8-752-052-75	s	IC CXA1479Q	
IC303	8-759-242-78	s	IC TC7W02F	
IC304	8-759-564-49	s	IC TC7W53FU-TE12R	
IC305	8-752-052-73	s	IC CXA1451M	
IC306	8-759-564-49	s	IC TC7W53FU-TE12R	
IC308	8-759-287-54	s	IC TL084CPW	(E20) [for OLD]
IC308	8-759-669-74	s	IC TL084CPWR-12	[for NEW]
IC309	8-759-082-58	s	IC TC7W08FU	
IC502	8-759-082-59	s	IC TC7W32FU	
IC503	8-759-327-01	s	IC NJM062V-TE2	
IC504	8-759-564-49	s	IC TC7W53FU-TE12R	
IC505	8-752-052-48	s	IC CXA1370Q	
IC506	8-759-196-97	s	IC TC7SH32FU	(TE85R)
IC507 *P	8-752-068-24	s	IC CXA1450M-TH	
IC508	1-803-973-11	s	IC BP-108 (H8L2988)	
IC509 *P	8-752-068-24	s	IC CXA1450M-TH	
IC510 *P	8-752-068-24	s	IC CXA1450M-TH	
IC511	8-752-052-73	s	IC CXA1451M	
IC512	8-759-338-95	s	IC NJM2903V	(TE2)
IC513	8-759-157-17	s	IC PQ05SZ1U	
IC514	8-759-702-08	s	IC NJM360M	
IC701	8-759-082-59	s	IC TC7W32FU	
IC702	8-752-052-48	s	IC CXA1370Q	
IC703	1-803-973-11	s	IC BP-108 (H8L2988)	
IC704	8-759-338-95	s	IC NJM2903V	(TE2)
IC705	8-752-052-73	s	IC CXA1451M	
IC706	8-759-157-17	s	IC PQ05SZ1U	
IC707	8-759-196-97	s	IC TC7SH32FU	(TE85R)
IC901	8-759-549-15	s	IC SN74LV245APWR	
IC902	8-759-523-02	s	IC TC74HC4053AFT(EL)	
IC903	8-759-523-02	s	IC TC74HC4053AFT(EL)	
IC904	8-759-534-96	s	IC SN74AHCT125PW-E05	
IC905	8-759-536-93	s	IC M62371GP-600D	
IC906	8-759-549-01	s	IC SN74LV125APWR	
IC908	6-800-404-01	s	IC UPD780058GC-284-8BT	
IC910	8-759-485-79	s	IC TC7SET08FU	(TE85L)
IC911	8-759-337-40	s	IC NJM2904V(TE2)	
IC912	8-759-549-01	s	IC SN74LV125APWR	
IC913	8-759-157-17	s	IC PQ05SZ1U	
IC914	8-759-157-17	s	IC PQ05SZ1U	
IC915	8-759-539-89	s	IC LM2990SX-5.0	
IC916	8-759-278-58	s	IC NJM4558V	(TE2)
IC917	8-759-278-58	s	IC NJM4558V	(TE2)
IC918	8-759-523-02	s	IC TC74HC4053AFT(EL)	
IC919	8-759-491-47	s	IC TC74VHCT08FT	(EL)
IC920	8-759-490-41	s	IC TC74VHCT541AFT(EL)	
IC921	8-759-542-87	s	IC S-80827ANUP-EDQ-T2	
IC922	8-759-485-79	s	IC TC7SET08FU	(TE85L)
IC923	8-759-485-79	s	IC TC7SET08FU	(TE85L)
IC925	8-759-485-79	s	IC TC7SET08FU	(TE85L)
IC927	8-759-082-58	s	IC TC7W08FU	
IC929	8-759-157-17	s	IC PQ05SZ1U	
IC930	8-759-157-17	s	IC PQ05SZ1U	
IC931	8-759-523-97	s	IC TC74VHC123AFT(EL)	

(DM-123/P BOARD [SUFFIX 14])

Ref. No. or Q'ty	Part No.	SP	Description
IC932	8-759-523-94	s	IC TC74VHC32FT(EL)
IC934	8-759-524-18	s	IC TC74VHC163FT(EL)
IC935	8-759-524-18	s	IC TC74VHC163FT(EL)
IC936	8-759-491-45	s	IC TC74VHCT00AFT(EL)
IC937	8-759-082-58	s	IC TC7W08FU
IC938	8-759-524-22	s	IC TC74VHC175FT(EL)
IC939	8-759-488-29	s	IC TC7W66FU (TE12R)
IC1101	8-759-669-74	s	IC TL084CPWR-12
IC1102	8-759-488-29	s	IC TC7W66FU (TE12R)
IC1103	8-759-449-58	s	IC LM7131BCM5X
IC1105	8-759-531-92	s	IC TC7WH04FU(TE12R)
IC1106	8-759-082-58	s	IC TC7W08FU
IC1107	8-759-337-40	s	IC NJM2904V(TE2)
IC1108	8-752-376-32	s	IC CXD2310AR
IC1109	8-752-362-70	s	IC CXD101-106Q
IC1114	8-759-209-90	s	IC TC4S71F
IC1201	8-759-669-74	s	IC TL084CPWR-12
IC1202	8-759-488-29	s	IC TC7W66FU (TE12R)
IC1203	8-759-449-58	s	IC LM7131BCM5X
IC1207	8-759-337-40	s	IC NJM2904V(TE2)
IC1208	8-752-376-32	s	IC CXD2310AR
IC1209	8-752-362-70	s	IC CXD101-106Q
IC1214	8-759-209-90	s	IC TC4S71F
IC1215	8-759-183-53	s	IC TL431CPK-E2
IC1216	8-759-183-53	s	IC TL431CPK-E2
IC1217	8-759-183-53	s	IC TL431CPK-E2
IC1301	8-752-358-08	s	IC CXD2221Q
IC1303	8-759-082-60	s	IC TC7S66FU
IC1304	8-759-973-82	s	IC TLC549IPS
IC1305	8-759-381-47	s	IC AD7524JR
IC1306	8-759-669-74	s	IC TL084CPWR-12
IC1402	8-759-669-74	s	IC TL084CPWR-12
IC1404	8-759-196-12	s	IC SN74LS221DB
IC1405	8-759-980-44	s	IC TL712CPS
IC1406	8-759-485-79	s	IC TC7SET08FU (TE85L)
IC1407	8-759-523-03	s	IC TC74HC4066AFT(EL)
IC1408	8-759-242-78	s	IC TC7W02F
IC1409	8-759-669-74	s	IC TL084CPWR-12
IC1410	8-759-196-93	s	IC TC7SH00FU-TE85R
IC1411	8-759-196-93	s	IC TC7SH00FU-TE85R
IC1413	8-759-669-74	s	IC TL084CPWR-12
IC1501	8-752-358-08	s	IC CXD2221Q
IC1502	8-759-669-74	s	IC TL084CPWR-12
IC1503	8-759-082-60	s	IC TC7S66FU
IC1504	8-759-973-82	s	IC TLC549IPS
IC1505	8-759-381-47	s	IC AD7524JR
IC1506	8-759-669-74	s	IC TL084CPWR-12
IC1510	8-759-196-93	s	IC TC7SH00FU-TE85R
IC1511	8-759-196-93	s	IC TC7SH00FU-TE85R
IC1603	8-759-338-95	s	IC NJM2903V (TE2)
IC1606	8-759-523-03	s	IC TC74HC4066AFT(EL)
IC1608	8-759-980-44	s	IC TL712CPS
IC1609	8-759-196-12	s	IC SN74LS221DB
IC1610	8-759-485-79	s	IC TC7SET08FU (TE85L)
IC1611	8-759-242-78	s	IC TC7W02F
IC1612	8-759-669-74	s	IC TL084CPWR-12
IC1614	8-759-524-19	s	IC TC74VHC164FT(EL)
IC1701	8-759-196-97	s	IC TC7SH32FU (TE85R)
IC1702	8-759-194-81	s	IC CXD8395AQ

(DM-123/P BOARD [SUFFIX 14])

Ref. No. or Q'ty	Part No.	SP	Description
IC1703	8-759-194-81	s	IC CXD8395AQ
IC1704	8-752-359-55	s	IC CXK48324R
IC1705	8-752-359-55	s	IC CXK48324R
IC1706	8-759-277-63	s	IC TC7W14FU (TE12R)
IC1707	8-759-523-94	s	IC TC74VHC32FT(EL)
IC1708	8-752-341-32	s	IC CXD2209Q
IC1709	8-759-524-22	s	IC TC74VHC175FT(EL)
IC1710	8-759-523-95	s	IC TC74VHC74FT(EL)
IC1711	8-759-524-18	s	IC TC74VHC163FT(EL)
IC1712	8-752-341-32	s	IC CXD2209Q
IC1713	8-752-341-32	s	IC CXD2209Q
IC1714	8-759-399-52	s	IC CXD8935BQ
IC1715	8-759-277-63	s	IC TC7W14FU (TE12R)
IC1716	8-759-524-10	s	IC TC74VHC157FT (EL)
IC1717	8-759-196-93	s	IC TC7SH00FU-TE85R
IC1718	8-759-564-49	s	IC TC7W53FU-TE12R
IC1800	8-759-485-79	s	IC TC7SET08FU (TE85L)
IC1802	8-759-490-41	s	IC TC74VHCT541AFT(EL)
IC1803	8-759-453-97	s	IC TC7SET08FU-TE85R
IC1804	8-759-523-84	s	IC TC74VHC14FT (EL)
IC1805	8-759-468-72	s	IC AK6420AM (E2)
IC1806	8-759-485-79	s	IC TC7SET08FU (TE85L)
IC1807	8-759-447-77	s	IC TC7WH74FU (TR12R)
IC1809	8-759-702-08	s	IC NJM360M
IC1810*P	8-759-392-01	s	IC TC7SH86FU (TE85R)
IC1814	8-759-669-75	s	IC TLC2932IPWR
IC1815	8-759-549-15	s	IC SN74LV245APWR
IC1816	8-759-549-15	s	IC SN74LV245APWR
IC1818	8-759-082-60	s	IC TC7S66FU
IC1819	8-759-327-01	s	IC NJM062V-TE2
IC1820	8-759-338-95	s	IC NJM2903V (TE2)
IC1821	8-759-531-92	s	IC TC7WH04FU(TE12R)
IC1822	8-759-485-79	s	IC TC7SET08FU (TE85L)
IC1823	8-759-523-97	s	IC TC74VHC123AFT(EL)
IC1824	8-752-356-05	s	IC CXD206-104Q
IC1825	8-759-549-15	s	IC SN74LV245APWR
IC1826	8-759-549-15	s	IC SN74LV245APWR
IC1827	8-759-327-01	s	IC NJM062V-TE2
IC1828	8-759-523-97	s	IC TC74VHC123AFT(EL)
IC1829	8-752-360-90	s	IC CXD303-101Q
IC1830	8-752-355-09	s	IC CXD104-114Q
IC1833	8-759-196-12	s	IC SN74LS221DB
IC1834	8-759-337-40	s	IC NJM2904V(TE2)
IC1835	8-759-196-93	s	IC TC7SH00FU-TE85R
IC1838	8-759-453-97	s	IC TC7SET08FU-TE85R
IC1839	8-759-523-02	s	IC TC74HC4053AFT(EL)
L102	1-410-381-11	s	INDUCTOR,CHIP 10UH (3225)
L103	1-410-369-11	s	INDUCTOR,CHIP 1UH (3225)
L104	1-410-383-31	s	INDUCTOR,CHIP 15UH (3225)
L105	1-410-372-21	s	CHIP INDUCTOR 1.8UH (3225)
L106	1-410-380-31	s	INDUCTOR,CHIP 8.2UH (3225)
L107	1-410-378-11	s	INDUCTOR,CHIP 5.6UH (3225)
L108 *N	1-410-379-31	s	INDUCTOR,CHIP 6.8UH (3225)
*P	1-410-381-11	s	INDUCTOR,CHIP 10UH (3225)
L109	1-410-378-11	s	INDUCTOR,CHIP 5.6UH (3225)
L110 *N	1-410-379-31	s	INDUCTOR,CHIP 6.8UH (3225)
*P	1-410-381-11	s	INDUCTOR,CHIP 10UH (3225)
L111	1-410-380-31	s	INDUCTOR,CHIP 8.2UH (3225)

(DM-123/P BOARD [SUFFIX 14])

Ref. No. or Q'ty	Part No.	SP	Description
L112	1-410-381-11	s	INDUCTOR,CHIP 10UH (3225)
L113	1-410-380-31	s	INDUCTOR,CHIP 8.2UH (3225)
L114 *N	1-410-377-31	s	INDUCTOR,CHIP 4.7UH (3225)
*P	1-410-375-11	s	CHIP INDUCTOR 3.3UH (3225)
L115	1-410-380-31	s	INDUCTOR,CHIP 8.2UH (3225)
L116	1-410-378-11	s	INDUCTOR,CHIP 5.6UH (3225)
L117	1-414-398-11	s	INDUCTOR (SMD) 10UH
L118	1-414-398-11	s	INDUCTOR (SMD) 10UH
L119	1-414-398-11	s	INDUCTOR (SMD) 10UH
L120	1-414-398-11	s	INDUCTOR (SMD) 10UH
L121	1-410-371-41	s	CHIP INDUCTOR 1.5UH
L122	1-410-371-41	s	CHIP INDUCTOR 1.5UH
L123	1-410-378-11	s	INDUCTOR,CHIP 5.6UH (3225)
L124	1-410-382-31	s	INDUCTOR,CHIP 12UH (3225)
L125	1-412-203-11	s	MICRO INDUCTOR 560UH
L126	1-410-373-31	s	CHIP INDUCTOR 2.2UH (3225)
L127	1-410-371-41	s	CHIP INDUCTOR 1.5UH
L128	1-410-377-31	s	INDUCTOR,CHIP 4.7UH (3225)
L129	1-410-376-21	s	INDUCTOR,CHIP 3.9UH (3225)
L130	1-410-389-31	s	INDUCTOR,CHIP 47UH (3225)
L132	1-410-378-11	s	INDUCTOR,CHIP 5.6UH (3225)
L301	1-414-398-11	s	INDUCTOR (SMD) 10UH
L302	1-410-379-31	s	INDUCTOR,CHIP 6.8UH (3225)
L303	1-410-380-31	s	INDUCTOR,CHIP 8.2UH (3225)
L304	1-414-398-11	s	INDUCTOR (SMD) 10UH
L305	1-410-379-31	s	INDUCTOR,CHIP 6.8UH (3225)
L306	1-410-380-31	s	INDUCTOR,CHIP 8.2UH (3225)
L307	1-412-282-41	s	INDUCTOR,CHIP 470UH (3225)
L308	1-412-282-41	s	INDUCTOR,CHIP 470UH (3225)
L309	1-410-380-31	s	INDUCTOR,CHIP 8.2UH (3225)
L310	1-410-380-31	s	INDUCTOR,CHIP 8.2UH (3225)
L311	1-414-398-11	s	INDUCTOR (SMD) 10UH
L312	1-414-398-11	s	INDUCTOR (SMD) 10UH
L313	1-410-380-31	s	INDUCTOR,CHIP 8.2UH (3225)
L314	1-410-380-31	s	INDUCTOR,CHIP 8.2UH (3225)
L315	1-410-371-41	s	CHIP INDUCTOR 1.5UH
L316	1-410-371-41	s	CHIP INDUCTOR 1.5UH
L317	1-414-398-11	s	INDUCTOR (SMD) 10UH
L318	1-410-383-31	s	INDUCTOR,CHIP 15UH (3225)
L319	1-412-203-11	s	MICRO INDUCTOR 560UH
L502	1-414-400-11	s	INDUCTOR, 22UH
L503	1-412-282-41	s	INDUCTOR,CHIP 470UH (3225)
L504	1-412-206-11	s	MICRO INDUCTOR 1MMH
L506	1-414-402-11	s	INDUCTOR (SMD) 47UH
L511	1-414-398-11	s	INDUCTOR (SMD) 10UH
L512	1-414-398-11	s	INDUCTOR (SMD) 10UH
L515	1-414-398-11	s	INDUCTOR (SMD) 10UH
L516	1-412-193-11	s	MICRO INDUCTOR 68UH
L701	1-414-400-11	s	INDUCTOR, 22UH
L703	1-414-402-11	s	INDUCTOR (SMD) 47UH
L706	1-414-398-11	s	INDUCTOR (SMD) 10UH
L707	1-414-398-11	s	INDUCTOR (SMD) 10UH
L708	1-414-398-11	s	INDUCTOR (SMD) 10UH
L903	1-414-400-11	s	INDUCTOR, 22UH
L904	1-414-400-11	s	INDUCTOR, 22UH
L905	1-414-400-11	s	INDUCTOR, 22UH
L908	1-416-344-11	s	COIL, CHOKE 10UH
L909	1-416-344-11	s	COIL, CHOKE 10UH
L910	1-416-344-11	s	COIL, CHOKE 10UH

(DM-123/P BOARD [SUFFIX 14])

Ref. No. or Q'ty	Part No.	SP	Description
L911	1-416-344-11	s	COIL, CHOKE 10UH
L912	1-416-344-11	s	COIL, CHOKE 10UH
L913	1-416-344-11	s	COIL, CHOKE 10UH
L914	1-416-344-11	s	COIL, CHOKE 10UH
L915	1-416-344-11	s	COIL, CHOKE 10UH
L1103	1-412-196-11	s	MICRO INDUCTOR 150UH
L1104	1-414-400-11	s	INDUCTOR, 22UH
L1105	1-414-400-11	s	INDUCTOR, 22UH
L1106	1-414-400-11	s	INDUCTOR, 22UH
L1202	1-412-196-11	s	MICRO INDUCTOR 150UH
L1205	1-414-400-11	s	INDUCTOR, 22UH
L1206	1-414-400-11	s	INDUCTOR, 22UH
L1207	1-414-400-11	s	INDUCTOR, 22UH
L1301	1-414-402-11	s	INDUCTOR (SMD) 47UH
L1302	1-414-402-11	s	INDUCTOR (SMD) 47UH
L1303	1-412-280-31	s	INDUCTOR,CHIP 330UH (3225)
L1304	1-412-204-11	s	MICRO INDUCTOR 680UH
L1305	1-414-402-11	s	INDUCTOR (SMD) 47UH
L1310	1-414-400-11	s	INDUCTOR, 22UH
L1401	1-410-391-11	s	INDUCTOR,CHIP 68UH (3225)
L1402	1-414-402-11	s	INDUCTOR (SMD) 47UH
L1403	1-414-398-11	s	INDUCTOR (SMD) 10UH
L1501	1-414-402-11	s	INDUCTOR (SMD) 47UH
L1502	1-414-402-11	s	INDUCTOR (SMD) 47UH
L1503	1-410-393-11	s	INDUCTOR,CHIP 100UH (3225)
L1504	1-410-658-31	s	INDUCTOR,CHIP 220UH (3225)
L1505	1-410-383-31	s	INDUCTOR,CHIP 15UH (3225)
L1506	1-410-387-11	s	INDUCTOR,CHIP 33UH (3225)
L1507	1-414-402-11	s	INDUCTOR (SMD) 47UH
L1601	1-410-388-31	s	INDUCTOR,CHIP 39UH
L1602	1-414-402-11	s	INDUCTOR (SMD) 47UH
L1603	1-414-398-11	s	INDUCTOR (SMD) 10UH
L1610	1-414-400-11	s	INDUCTOR, 22UH
L1701	1-414-400-11	s	INDUCTOR, 22UH
L1702	1-414-400-11	s	INDUCTOR, 22UH
L1803 *N	1-410-390-11	s	CHIP INDUCTOR 56UH (3225)
*P	1-410-392-11	s	INDUCTOR,CHIP 82UH (3225)
L1804 *N	1-410-390-11	s	CHIP INDUCTOR 56UH (3225)
*P	1-410-392-11	s	INDUCTOR,CHIP 82UH (3225)
L1805	1-414-400-11	s	INDUCTOR, 22UH
L1807	1-414-400-11	s	INDUCTOR, 22UH
L1808	1-414-400-11	s	INDUCTOR, 22UH
L1809	1-414-398-11	s	INDUCTOR (SMD) 10UH
L1810	1-414-398-11	s	INDUCTOR (SMD) 10UH
LV1401	1-406-745-21	s	COIL, VARIABLE
LV1601	1-406-745-21	s	COIL, VARIABLE
Q101	8-729-117-73	s	TRANSISTOR 2SC4178-F14
Q102	8-729-117-73	s	TRANSISTOR 2SC4178-F14
Q103	8-729-013-37	s	TRANSISTOR 2SC4213-AB-TE85L
Q104	8-729-117-73	s	TRANSISTOR 2SC4178-F14
Q105	8-729-013-37	s	TRANSISTOR 2SC4213-AB-TE85L
Q106	8-729-117-73	s	TRANSISTOR 2SC4178-F14
Q107	8-729-117-73	s	TRANSISTOR 2SC4178-F14
Q108	8-729-028-91	s	TRANSISTOR DTA144EUA-T106
Q109	8-729-143-07	s	TRANSISTOR 2SA1610-Y33
Q110	8-729-117-73	s	TRANSISTOR 2SC4178-F14
Q111	8-729-117-73	s	TRANSISTOR 2SC4178-F14
Q112	8-729-117-73	s	TRANSISTOR 2SC4178-F14

(DM-123/P BOARD [SUFFIX 14])

Ref. No. or Q'ty	Part No.	SP	Description
Q113	8-729-028-91	s	TRANSISTOR DTA144EUA-T106
Q114	8-729-143-07	s	TRANSISTOR 2SA1610-Y33
Q115	8-729-117-73	s	TRANSISTOR 2SC4178-F14
Q116	8-729-028-91	s	TRANSISTOR DTA144EUA-T106
Q117	8-729-143-07	s	TRANSISTOR 2SA1610-Y33
Q118	8-729-117-73	s	TRANSISTOR 2SC4178-F14
Q119	8-729-117-73	s	TRANSISTOR 2SC4178-F14
Q120	8-729-117-73	s	TRANSISTOR 2SC4178-F14
Q121	8-729-117-73	s	TRANSISTOR 2SC4178-F14
Q122	8-729-117-73	s	TRANSISTOR 2SC4178-F14
Q123	8-729-143-07	s	TRANSISTOR 2SA1610-Y33
Q124	8-729-143-07	s	TRANSISTOR 2SA1610-Y33
Q125	8-729-117-73	s	TRANSISTOR 2SC4178-F14
Q126	8-729-117-73	s	TRANSISTOR 2SC4178-F14
Q127	8-729-117-73	s	TRANSISTOR 2SC4178-F14
Q128	8-729-117-73	s	TRANSISTOR 2SC4178-F14
Q129	8-729-143-07	s	TRANSISTOR 2SA1610-Y33
Q130	8-729-143-07	s	TRANSISTOR 2SA1610-Y33
Q131	8-729-117-73	s	TRANSISTOR 2SC4178-F14
Q132	8-729-117-73	s	TRANSISTOR 2SC4178-F14
Q133	8-729-117-73	s	TRANSISTOR 2SC4178-F14
Q134	8-729-117-73	s	TRANSISTOR 2SC4178-F14
Q135	8-729-117-32	s	TRANSISTOR 2SC4177
Q136	8-729-117-32	s	TRANSISTOR 2SC4177
Q137	8-729-140-63	s	TRANSISTOR 2SA1611-M5M6
Q138	8-729-117-73	s	TRANSISTOR 2SC4178-F14
Q139	8-729-117-73	s	TRANSISTOR 2SC4178-F14
Q141	8-729-117-73	s	TRANSISTOR 2SC4178-F14
Q140	8-729-026-56	s	TRANSISTOR FMS2A-T148
Q142	8-729-117-73	s	TRANSISTOR 2SC4178-F14
Q143	8-729-117-73	s	TRANSISTOR 2SC4178-F14
Q144	8-729-013-37	s	TRANSISTOR 2SC4213-AB-TE85L
Q145	8-729-013-37	s	TRANSISTOR 2SC4213-AB-TE85L
Q146	8-729-013-37	s	TRANSISTOR 2SC4213-AB-TE85L
Q147	8-729-013-37	s	TRANSISTOR 2SC4213-AB-TE85L
Q148	8-729-117-73	s	TRANSISTOR 2SC4178-F14
Q301	8-729-117-73	s	TRANSISTOR 2SC4178-F14
Q302	8-729-117-73	s	TRANSISTOR 2SC4178-F14
Q303	8-729-117-73	s	TRANSISTOR 2SC4178-F14
Q304	8-729-117-73	s	TRANSISTOR 2SC4178-F14
Q305	8-729-117-73	s	TRANSISTOR 2SC4178-F14
Q306	8-729-117-73	s	TRANSISTOR 2SC4178-F14
Q307	8-729-117-73	s	TRANSISTOR 2SC4178-F14
Q308	8-729-117-73	s	TRANSISTOR 2SC4178-F14
Q309	8-729-117-73	s	TRANSISTOR 2SC4178-F14
Q310	8-729-143-07	s	TRANSISTOR 2SA1610-Y33
Q311	8-729-143-07	s	TRANSISTOR 2SA1610-Y33
Q312	8-729-117-73	s	TRANSISTOR 2SC4178-F14
Q313	8-729-117-73	s	TRANSISTOR 2SC4178-F14
Q314	8-729-143-07	s	TRANSISTOR 2SA1610-Y33
Q315	8-729-143-07	s	TRANSISTOR 2SA1610-Y33
Q316	8-729-117-73	s	TRANSISTOR 2SC4178-F14
Q317	8-729-117-73	s	TRANSISTOR 2SC4178-F14
Q318	8-729-117-73	s	TRANSISTOR 2SC4178-F14
Q319	8-729-117-73	s	TRANSISTOR 2SC4178-F14
Q320	8-729-117-73	s	TRANSISTOR 2SC4178-F14
Q321	8-729-117-32	s	TRANSISTOR 2SC4177
Q322	8-729-140-63	s	TRANSISTOR 2SA1611-M5M6
Q323	8-729-026-56	s	TRANSISTOR FMS2A-T148

(DM-123/P BOARD [SUFFIX 14])

Ref. No. or Q'ty	Part No.	SP	Description
Q324	8-729-117-73	s	TRANSISTOR 2SC4178-F14
Q325	8-729-117-73	s	TRANSISTOR 2SC4178-F14
Q501	8-729-029-14	s	TRANSISTOR DTC144EUA-T106
Q502	8-729-029-14	s	TRANSISTOR DTC144EUA-T106
Q503	8-729-028-91	s	TRANSISTOR DTA144EUA-T106
Q504	8-729-028-91	s	TRANSISTOR DTA144EUA-T106
Q505 *P	8-729-026-58	s	TRANSISTOR FMY3A-T148
Q506	8-729-026-58	s	TRANSISTOR FMY3A-T148
Q507	8-729-026-58	s	TRANSISTOR FMY3A-T148
Q508 *P	8-729-026-58	s	TRANSISTOR FMY3A-T148
Q509	8-729-026-58	s	TRANSISTOR FMY3A-T148
Q510	8-729-026-58	s	TRANSISTOR FMY3A-T148
Q512	8-729-117-73	s	TRANSISTOR 2SC4178-F14
Q513	8-729-028-91	s	TRANSISTOR DTA144EUA-T106
Q514	8-729-029-14	s	TRANSISTOR DTC144EUA-T106
Q515	8-729-117-32	s	TRANSISTOR 2SC4177
Q516	8-729-117-32	s	TRANSISTOR 2SC4177
Q517	8-729-117-32	s	TRANSISTOR 2SC4177
Q518	8-729-117-32	s	TRANSISTOR 2SC4177
Q520	8-729-907-26	s	TRANSISTOR IMX1
Q702 *P	8-729-140-63	s	TRANSISTOR 2SA1611-M5M6
Q703 *P	8-729-117-32	s	TRANSISTOR 2SC4177
Q704	8-729-140-63	s	TRANSISTOR 2SA1611-M5M6
Q705	8-729-117-32	s	TRANSISTOR 2SC4177
Q706	8-729-026-56	s	TRANSISTOR FMS2A-T148
Q707	8-729-907-26	s	TRANSISTOR IMX1
Q710	8-729-117-32	s	TRANSISTOR 2SC4177
Q711	8-729-117-73	s	TRANSISTOR 2SC4178-F14
Q712	8-729-028-91	s	TRANSISTOR DTA144EUA-T106
Q713	8-729-029-14	s	TRANSISTOR DTC144EUA-T106
Q714	8-729-117-32	s	TRANSISTOR 2SC4177
Q715	8-729-117-32	s	TRANSISTOR 2SC4177
Q717	8-729-907-26	s	TRANSISTOR IMX1
Q903	8-729-029-14	s	TRANSISTOR DTC144EUA-T106
Q920	8-729-029-14	s	TRANSISTOR DTC144EUA-T106
Q1103	8-729-140-63	s	TRANSISTOR 2SA1611-M5M6
Q1108	8-729-029-14	s	TRANSISTOR DTC144EUA-T106
Q1111	8-729-140-63	s	TRANSISTOR 2SA1611-M5M6
Q1203	8-729-140-63	s	TRANSISTOR 2SA1611-M5M6
Q1210	8-729-140-63	s	TRANSISTOR 2SA1611-M5M6
Q1301	8-729-907-26	s	TRANSISTOR IMX1
Q1302	8-729-117-32	s	TRANSISTOR 2SC4177
Q1401	8-729-117-32	s	TRANSISTOR 2SC4177
Q1403	8-729-026-56	s	TRANSISTOR FMS2A-T148
Q1405	8-729-140-47	s	TRANSISTOR 2SC3735-L-B35
Q1406	8-729-140-63	s	TRANSISTOR 2SA1611-M5M6
Q1407	8-729-117-32	s	TRANSISTOR 2SC4177
Q1408	8-729-907-46	s	TRANSISTOR IMZ1
Q1409	8-729-117-32	s	TRANSISTOR 2SC4177
Q1410	8-729-907-26	s	TRANSISTOR IMX1
Q1501	8-729-907-26	s	TRANSISTOR IMX1
Q1502	8-729-117-32	s	TRANSISTOR 2SC4177
Q1601	8-729-117-32	s	TRANSISTOR 2SC4177
Q1602	8-729-026-56	s	TRANSISTOR FMS2A-T148
Q1603	8-729-907-46	s	TRANSISTOR IMZ1
Q1604	8-729-140-47	s	TRANSISTOR 2SC3735-L-B35
Q1605	8-729-140-63	s	TRANSISTOR 2SA1611-M5M6
Q1606	8-729-117-32	s	TRANSISTOR 2SC4177
Q1607	8-729-117-32	s	TRANSISTOR 2SC4177

(DM-123/P BOARD [SUFFIX 14])

Ref. No. or Q'ty	Part No.	SP	Description
Q1608	8-729-907-26	s	TRANSISTOR IMX1
Q1801	8-729-117-32	s	TRANSISTOR 2SC4177
Q1802	8-729-029-14	s	TRANSISTOR DTC144EUA-T106
Q1803	8-729-029-14	s	TRANSISTOR DTC144EUA-T106
R101	1-218-716-11	s	RESISTOR,CHIP 10K 1/16W(1608)
R102	1-218-716-11	s	RESISTOR,CHIP 10K 1/16W(1608)
R103	1-218-692-11	s	RESISTOR,CHIP 1.0K 1/16W(1608)
R104	1-218-692-11	s	RESISTOR,CHIP 1.0K 1/16W(1608)
R105	1-218-692-11	s	RESISTOR,CHIP 1.0K 1/16W(1608)
R106	1-218-671-11	s	RESISTOR,CHIP 130 1/16W (1608)
R107	1-218-670-11	s	RESISTOR,CHIP 120 1/16W (1608)
R108	1-218-665-11	s	RESISTOR,CHIP 75 1/16W (1608)
R109	1-218-668-11	s	RESISTOR,CHIP 100 1/16W (1608)
R111	1-218-704-11	s	RESISTOR,CHIP 3.3K 1/16W(1608)
R112	1-218-668-11	s	RESISTOR,CHIP 100 1/16W (1608)
R113	1-218-708-11	s	RESISTOR,CHIP 4.7K 1/16W(1608)
R116	1-218-692-11	s	RESISTOR,CHIP 1.0K 1/16W(1608)
R117	1-218-692-11	s	RESISTOR,CHIP 1.0K 1/16W(1608)
R120	1-218-692-11	s	RESISTOR,CHIP 1.0K 1/16W(1608)
R121	1-218-676-11	s	RESISTOR,CHIP 220 1/16W(1608)
R122	1-218-708-11	s	RESISTOR,CHIP 4.7K 1/16W(1608)
R123	1-218-692-11	s	RESISTOR,CHIP 1.0K 1/16W(1608)
R125	1-218-652-11	s	RESISTOR,CHIP 22 1/16W (1608)
R126	1-218-692-11	s	RESISTOR,CHIP 1.0K 1/16W(1608)
R127	1-218-692-11	s	RESISTOR,CHIP 1.0K 1/16W(1608)
R128	1-218-698-11	s	RESISTOR,CHIP 1.8K 1/16W(1608)
R129	1-218-692-11	s	RESISTOR,CHIP 1.0K 1/16W(1608)
R130	1-218-694-11	s	RESISTOR,CHIP 1.2K1/16W(1608)
R131	1-218-700-11	s	RESISTOR,CHIP 2.2K 1/16W(1608)
R132	1-218-680-11	s	RESISTOR,CHIP 330 1/16W(1608)
R133	1-218-680-11	s	RESISTOR,CHIP 330 1/16W(1608)
R134	1-218-679-11	s	RESISTOR,CHIP 300 1/16W (1608)
R135	1-218-716-11	s	RESISTOR,CHIP 10K 1/16W(1608)
R136	1-218-708-11	s	RESISTOR,CHIP 4.7K 1/16W(1608)
R137	1-218-708-11	s	RESISTOR,CHIP 4.7K 1/16W(1608)
R138	1-218-716-11	s	RESISTOR,CHIP 10K 1/16W(1608)
R139	1-218-668-11	s	RESISTOR,CHIP 100 1/16W (1608)
R140	1-218-679-11	s	RESISTOR,CHIP 300 1/16W (1608)
R141	1-218-708-11	s	RESISTOR,CHIP 4.7K 1/16W(1608)
R142	1-218-716-11	s	RESISTOR,CHIP 10K 1/16W(1608)
R143	1-218-668-11	s	RESISTOR,CHIP 100 1/16W (1608)
R144	1-218-716-11	s	RESISTOR,CHIP 10K 1/16W(1608)
R145	1-218-700-11	s	RESISTOR,CHIP 2.2K 1/16W(1608)
R146	1-216-864-11	s	RESISTOR,CHIP 0 1/16W (1608)
R147	1-218-708-11	s	RESISTOR,CHIP 4.7K 1/16W(1608)
R148	1-218-668-11	s	RESISTOR,CHIP 100 1/16W (1608)
R149	1-218-668-11	s	RESISTOR,CHIP 100 1/16W (1608)
R150	1-218-684-11	s	RESISTOR,CHIP 470 1/16W (1608)
R151	1-218-668-11	s	RESISTOR,CHIP 100 1/16W (1608)
R153	1-218-692-11	s	RESISTOR,CHIP 1.0K 1/16W(1608)
R154	1-218-716-11	s	RESISTOR,CHIP 10K 1/16W(1608)
R155	1-218-716-11	s	RESISTOR,CHIP 10K 1/16W(1608)
R156	1-218-708-11	s	RESISTOR,CHIP 4.7K 1/16W(1608)
R157	1-218-668-11	s	RESISTOR,CHIP 100 1/16W (1608)
R158	1-218-704-11	s	RESISTOR,CHIP 3.3K 1/16W(1608)
R159	1-218-704-11	s	RESISTOR,CHIP 3.3K 1/16W(1608)
R160	1-218-679-11	s	RESISTOR,CHIP 300 1/16W (1608)
R161 *N	1-218-679-11	s	RESISTOR,CHIP 300 1/16W (1608)
*P	1-218-680-11	s	RESISTOR,CHIP 330 1/16W(1608)

(DM-123/P BOARD [SUFFIX 14])

Ref. No. or Q'ty	Part No.	SP	Description
R162	1-218-716-11	s	RESISTOR,CHIP 10K 1/16W(1608)
R163	1-218-668-11	s	RESISTOR,CHIP 100 1/16W (1608)
R164	1-218-716-11	s	RESISTOR,CHIP 10K 1/16W(1608)
R165	1-218-668-11	s	RESISTOR,CHIP 100 1/16W (1608)
R166	1-218-708-11	s	RESISTOR,CHIP 4.7K 1/16W(1608)
R167	1-218-668-11	s	RESISTOR,CHIP 100 1/16W (1608)
R168	1-218-679-11	s	RESISTOR,CHIP 300 1/16W (1608)
R169	1-218-668-11	s	RESISTOR,CHIP 100 1/16W (1608)
R170 *N	1-218-679-11	s	RESISTOR,CHIP 300 1/16W (1608)
*P	1-218-680-11	s	RESISTOR,CHIP 330 1/16W(1608)
R171	1-218-692-11	s	RESISTOR,CHIP 1.0K 1/16W(1608)
R172	1-218-708-11	s	RESISTOR,CHIP 4.7K 1/16W(1608)
R173	1-218-708-11	s	RESISTOR,CHIP 4.7K 1/16W(1608)
R174	1-218-679-11	s	RESISTOR,CHIP 300 1/16W (1608)
R175	1-218-716-11	s	RESISTOR,CHIP 10K 1/16W(1608)
R176	1-218-668-11	s	RESISTOR,CHIP 100 1/16W (1608)
R177	1-218-668-11	s	RESISTOR,CHIP 100 1/16W (1608)
R178	1-218-676-11	s	RESISTOR,CHIP 220 1/16W(1608)
R179	1-218-685-11	s	RESISTOR,CHIP 510 1/16W
R180	1-218-683-11	s	RESISTOR CHIP 430 1/16W (1608)
R181	1-218-684-11	s	RESISTOR,CHIP 470 1/16W (1608)
R182	1-218-676-11	s	RESISTOR,CHIP 220 1/16W(1608)
R183	1-218-685-11	s	RESISTOR,CHIP 510 1/16W
R184	1-218-683-11	s	RESISTOR CHIP 430 1/16W (1608)
R185	1-218-684-11	s	RESISTOR,CHIP 470 1/16W (1608)
R186	1-218-676-11	s	RESISTOR,CHIP 220 1/16W(1608)
R187	1-218-692-11	s	RESISTOR,CHIP 1.0K 1/16W(1608)
R188	1-218-676-11	s	RESISTOR,CHIP 220 1/16W(1608)
R189	1-218-668-11	s	RESISTOR,CHIP 100 1/16W (1608)
R190	1-218-668-11	s	RESISTOR,CHIP 100 1/16W (1608)
R191	1-218-708-11	s	RESISTOR,CHIP 4.7K 1/16W(1608)
R192	1-218-668-11	s	RESISTOR,CHIP 100 1/16W (1608)
R193	1-218-708-11	s	RESISTOR,CHIP 4.7K 1/16W(1608)
R194	1-218-668-11	s	RESISTOR,CHIP 100 1/16W (1608)
R195	1-218-668-11	s	RESISTOR,CHIP 100 1/16W (1608)
R196	1-218-676-11	s	RESISTOR,CHIP 220 1/16W(1608)
R197	1-218-685-11	s	RESISTOR,CHIP 510 1/16W
R198	1-218-682-11	s	RESISTOR,CHIP 390 1/16W (1608)
R199	1-218-684-11	s	RESISTOR,CHIP 470 1/16W (1608)
R200	1-218-676-11	s	RESISTOR,CHIP 220 1/16W(1608)
R201	1-218-685-11	s	RESISTOR,CHIP 510 1/16W
R202	1-218-681-11	s	RESISTOR CHIP 360 1/16W (1608)
R203	1-218-684-11	s	RESISTOR,CHIP 470 1/16W (1608)
R204	1-218-676-11	s	RESISTOR,CHIP 220 1/16W(1608)
R205	1-218-676-11	s	RESISTOR,CHIP 220 1/16W(1608)
R206	1-218-700-11	s	RESISTOR,CHIP 2.2K 1/16W(1608)
R207	1-218-668-11	s	RESISTOR,CHIP 100 1/16W (1608)
R208	1-218-668-11	s	RESISTOR,CHIP 100 1/16W (1608)
R209	1-218-708-11	s	RESISTOR,CHIP 4.7K 1/16W(1608)
R210	1-218-708-11	s	RESISTOR,CHIP 4.7K 1/16W(1608)
R211	1-218-716-11	s	RESISTOR,CHIP 10K 1/16W(1608)
R212	1-218-716-11	s	RESISTOR,CHIP 10K 1/16W(1608)
R213	1-218-676-11	s	RESISTOR,CHIP 220 1/16W(1608)
R214	1-218-680-11	s	RESISTOR,CHIP 330 1/16W(1608)
R215	1-218-680-11	s	RESISTOR,CHIP 330 1/16W(1608)
R216	1-218-708-11	s	RESISTOR,CHIP 4.7K 1/16W(1608)
R217	1-218-708-11	s	RESISTOR,CHIP 4.7K 1/16W(1608)
R218	1-218-692-11	s	RESISTOR,CHIP 1.0K 1/16W(1608)
R219	1-218-692-11	s	RESISTOR,CHIP 1.0K 1/16W(1608)

(DM-123/P BOARD [SUFFIX 14])

Ref. No. or Q'ty	Part No.	SP	Description
R220	1-218-652-11	s	RESISTOR,CHIP 22 1/16W (1608)
R221	1-218-652-11	s	RESISTOR,CHIP 22 1/16W (1608)
R222	1-218-700-11	s	RESISTOR,CHIP 2.2K 1/16W(1608)
R223	1-218-680-11	s	RESISTOR,CHIP 330 1/16W(1608)
R224	1-218-685-11	s	RESISTOR,CHIP 510 1/16W
R225	1-218-685-11	s	RESISTOR,CHIP 510 1/16W
R226	1-218-712-11	s	RESISTOR,METAL 6.8K 1/16W
R227	1-218-718-11	s	RESISTOR CHIP 12K 1/16W (1608)
R228	1-218-680-11	s	RESISTOR,CHIP 330 1/16W(1608)
R229	1-218-680-11	s	RESISTOR,CHIP 330 1/16W(1608)
R230	1-218-708-11	s	RESISTOR,CHIP 4.7K 1/16W(1608)
R231	1-218-708-11	s	RESISTOR,CHIP 4.7K 1/16W(1608)
R233	1-218-718-11	s	RESISTOR CHIP 12K 1/16W (1608)
R234	1-218-716-11	s	RESISTOR,CHIP 10K 1/16W(1608)
R235	1-218-686-11	s	RESISTOR CHIP 560 1/16W (1608)
R236	1-218-692-11	s	RESISTOR,CHIP 1.0K 1/16W(1608)
R237	1-218-700-11	s	RESISTOR,CHIP 2.2K 1/16W(1608)
R238	1-218-684-11	s	RESISTOR,CHIP 470 1/16W (1608)
R239	1-218-713-11	s	RESISTOR,METAL 7.5K 1/16W
R240	1-218-693-11	s	RESISTOR,CHIP 1.1K 1/16W(1608)
R241	1-218-692-11	s	RESISTOR,CHIP 1.0K 1/16W(1608)
R243	1-218-708-11	s	RESISTOR,CHIP 4.7K 1/16W(1608)
R244	1-218-692-11	s	RESISTOR,CHIP 1.0K 1/16W(1608)
R245	1-218-694-11	s	RESISTOR,CHIP 1.2K1/16W(1608)
R246	1-218-708-11	s	RESISTOR,CHIP 4.7K 1/16W(1608)
R247	1-218-660-91	s	RESISTOR,CHIP 47 1/16W (1608)
R248	1-218-660-91	s	RESISTOR,CHIP 47 1/16W (1608)
R249	1-218-700-11	s	RESISTOR,CHIP 2.2K 1/16W(1608)
R250	1-218-700-11	s	RESISTOR,CHIP 2.2K 1/16W(1608)
R251	1-218-700-11	s	RESISTOR,CHIP 2.2K 1/16W(1608)
R252	1-218-692-11	s	RESISTOR,CHIP 1.0K 1/16W(1608)
R253	1-218-732-11	s	RESISTOR,CHIP 47K 1/16W(1608)
R254	1-218-716-11	s	RESISTOR,CHIP 10K 1/16W(1608)
R255	1-218-724-11	s	RESISTOR,CHIP 22K 1/16W(1608)
R256	1-218-700-11	s	RESISTOR,CHIP 2.2K 1/16W(1608)
R257	1-218-724-11	s	RESISTOR,CHIP 22K 1/16W(1608)
R258	1-218-716-11	s	RESISTOR,CHIP 10K 1/16W(1608)
R260	1-218-652-11	s	RESISTOR,CHIP 22 1/16W (1608)
R261	1-218-692-11	s	RESISTOR,CHIP 1.0K 1/16W(1608)
R262	1-218-724-11	s	RESISTOR,CHIP 22K 1/16W(1608)
R263	1-218-652-11	s	RESISTOR,CHIP 22 1/16W (1608)
R264	1-218-716-11	s	RESISTOR,CHIP 10K 1/16W(1608)
R265	1-218-732-11	s	RESISTOR,CHIP 47K 1/16W(1608)
R266	1-218-725-11	s	RESISTOR,CHIP 24K 1/16W(1608)
R267	1-218-700-11	s	RESISTOR,CHIP 2.2K 1/16W(1608)
R268	1-218-732-11	s	RESISTOR,CHIP 47K 1/16W(1608)
R269	1-218-716-11	s	RESISTOR,CHIP 10K 1/16W(1608)
R270	1-218-692-11	s	RESISTOR,CHIP 1.0K 1/16W(1608)
R271	1-218-668-11	s	RESISTOR,CHIP 100 1/16W (1608)
R272	1-218-692-11	s	RESISTOR,CHIP 1.0K 1/16W(1608)
R276	1-218-716-11	s	RESISTOR,CHIP 10K 1/16W(1608)
R277	1-218-716-11	s	RESISTOR,CHIP 10K 1/16W(1608)
R278	1-218-716-11	s	RESISTOR,CHIP 10K 1/16W(1608)
R279	1-218-716-11	s	RESISTOR,CHIP 10K 1/16W(1608)
R280	1-218-716-11	s	RESISTOR,CHIP 10K 1/16W(1608)
R282	1-218-678-11	s	RESISTOR CHIP 270 1/16W (1608)
R283	1-218-678-11	s	RESISTOR CHIP 270 1/16W (1608)
R301	1-218-671-11	s	RESISTOR,CHIP 130 1/16W (1608)
R302	1-218-670-11	s	RESISTOR,CHIP 120 1/16W (1608)

(DM-123/P BOARD [SUFFIX 14])

Ref. No. or Q'ty	Part No.	SP	Description
R303	1-218-665-11	s	RESISTOR,CHIP 75 1/16W (1608)
R304	1-218-656-11	s	RESISTOR,CHIP 33 1/16W (1608)
R305	1-218-700-11	s	RESISTOR,CHIP 2.2K 1/16W(1608)
R306	1-218-652-11	s	RESISTOR,CHIP 22 1/16W (1608)
R308	1-216-857-11	s	RESISTOR,CHIP 1M 1/16W(1608)
R309	1-218-716-11	s	RESISTOR,CHIP 10K 1/16W(1608)
R312	1-216-857-11	s	RESISTOR,CHIP 1M 1/16W(1608)
R314	1-218-652-11	s	RESISTOR,CHIP 22 1/16W (1608)
R315	1-218-700-11	s	RESISTOR,CHIP 2.2K 1/16W(1608)
R316	1-218-716-11	s	RESISTOR,CHIP 10K 1/16W(1608)
R317	1-218-700-11	s	RESISTOR,CHIP 2.2K 1/16W(1608)
R318	1-218-656-11	s	RESISTOR,CHIP 33 1/16W (1608)
R319	1-218-692-11	s	RESISTOR,CHIP 1.0K 1/16W(1608)
R320	1-218-692-11	s	RESISTOR,CHIP 1.0K 1/16W(1608)
R321	1-218-676-11	s	RESISTOR,CHIP 220 1/16W(1608)
R322	1-218-706-11	s	RESISTOR,CHIP 3.9K 1/16W(1608)
R323	1-218-692-11	s	RESISTOR,CHIP 1.0K 1/16W(1608)
R326	1-218-692-11	s	RESISTOR,CHIP 1.0K 1/16W(1608)
R327	1-218-700-11	s	RESISTOR,CHIP 2.2K 1/16W(1608)
R328	1-218-680-11	s	RESISTOR,CHIP 330 1/16W(1608)
R329	1-218-680-11	s	RESISTOR,CHIP 330 1/16W(1608)
R330	1-218-708-11	s	RESISTOR,CHIP 4.7K 1/16W(1608)
R331	1-218-708-11	s	RESISTOR,CHIP 4.7K 1/16W(1608)
R332	1-218-700-11	s	RESISTOR,CHIP 2.2K 1/16W(1608)
R333	1-216-864-11	s	RESISTOR,CHIP 0 1/16W (1608)
R334	1-218-668-11	s	RESISTOR,CHIP 100 1/16W (1608)
R335	1-218-684-11	s	RESISTOR,CHIP 470 1/16W (1608)
R337	1-218-692-11	s	RESISTOR,CHIP 1.0K 1/16W(1608)
R338	1-218-704-11	s	RESISTOR,CHIP 3.3K 1/16W(1608)
R339	1-218-704-11	s	RESISTOR,CHIP 3.3K 1/16W(1608)
R340	1-218-680-11	s	RESISTOR,CHIP 330 1/16W(1608)
R341	1-218-679-11	s	RESISTOR,CHIP 300 1/16W (1608)
R342	1-218-679-11	s	RESISTOR,CHIP 300 1/16W (1608)
R343	1-218-668-11	s	RESISTOR,CHIP 100 1/16W (1608)
R344	1-218-679-11	s	RESISTOR,CHIP 300 1/16W (1608)
R345	1-218-668-11	s	RESISTOR,CHIP 100 1/16W (1608)
R346	1-218-708-11	s	RESISTOR,CHIP 4.7K 1/16W(1608)
R347	1-218-684-11	s	RESISTOR,CHIP 470 1/16W (1608)
R348	1-218-708-11	s	RESISTOR,CHIP 4.7K 1/16W(1608)
R349	1-218-668-11	s	RESISTOR,CHIP 100 1/16W (1608)
R350	1-218-676-11	s	RESISTOR,CHIP 220 1/16W(1608)
R351	1-218-685-11	s	RESISTOR,CHIP 510 1/16W
R352	1-218-683-11	s	RESISTOR CHIP 430 1/16W (1608)
R353	1-218-684-11	s	RESISTOR,CHIP 470 1/16W (1608)
R354	1-218-676-11	s	RESISTOR,CHIP 220 1/16W(1608)
R355	1-218-684-11	s	RESISTOR,CHIP 470 1/16W (1608)
R356	1-218-682-11	s	RESISTOR,CHIP 390 1/16W (1608)
R357	1-218-684-11	s	RESISTOR,CHIP 470 1/16W (1608)
R358	1-218-676-11	s	RESISTOR,CHIP 220 1/16W(1608)
R360	1-218-676-11	s	RESISTOR,CHIP 220 1/16W(1608)
R361	1-218-668-11	s	RESISTOR,CHIP 100 1/16W (1608)
R362	1-218-668-11	s	RESISTOR,CHIP 100 1/16W (1608)
R363	1-218-708-11	s	RESISTOR,CHIP 4.7K 1/16W(1608)
R364	1-218-668-11	s	RESISTOR,CHIP 100 1/16W (1608)
R365	1-218-708-11	s	RESISTOR,CHIP 4.7K 1/16W(1608)
R366	1-218-668-11	s	RESISTOR,CHIP 100 1/16W (1608)
R367	1-218-676-11	s	RESISTOR,CHIP 220 1/16W(1608)
R368	1-218-685-11	s	RESISTOR,CHIP 510 1/16W
R369	1-218-682-11	s	RESISTOR,CHIP 390 1/16W (1608)

(DM-123/P BOARD [SUFFIX 14])

Ref. No. or Q'ty	Part No.	SP	Description
R370	1-218-684-11	s	RESISTOR,CHIP 470 1/16W (1608)
R371	1-218-676-11	s	RESISTOR,CHIP 220 1/16W(1608)
R372	1-218-685-11	s	RESISTOR,CHIP 510 1/16W
R373	1-218-681-11	s	RESISTOR CHIP 360 1/16W (1608)
R374	1-218-684-11	s	RESISTOR,CHIP 470 1/16W (1608)
R375	1-218-676-11	s	RESISTOR,CHIP 220 1/16W(1608)
R376	1-218-676-11	s	RESISTOR,CHIP 220 1/16W(1608)
R377	1-218-668-11	s	RESISTOR,CHIP 100 1/16W (1608)
R378	1-218-668-11	s	RESISTOR,CHIP 100 1/16W (1608)
R379	1-218-708-11	s	RESISTOR,CHIP 4.7K 1/16W(1608)
R380	1-218-708-11	s	RESISTOR,CHIP 4.7K 1/16W(1608)
R381	1-218-716-11	s	RESISTOR,CHIP 10K 1/16W(1608)
R382	1-218-676-11	s	RESISTOR,CHIP 220 1/16W(1608)
R383	1-218-680-11	s	RESISTOR,CHIP 330 1/16W(1608)
R384	1-218-680-11	s	RESISTOR,CHIP 330 1/16W(1608)
R385	1-218-708-11	s	RESISTOR,CHIP 4.7K 1/16W(1608)
R386	1-218-708-11	s	RESISTOR,CHIP 4.7K 1/16W(1608)
R387	1-218-692-11	s	RESISTOR,CHIP 1.0K 1/16W(1608)
R388	1-218-652-11	s	RESISTOR,CHIP 22 1/16W (1608)
R389	1-218-652-11	s	RESISTOR,CHIP 22 1/16W (1608)
R390	1-218-692-11	s	RESISTOR,CHIP 1.0K 1/16W(1608)
R391	1-218-680-11	s	RESISTOR,CHIP 330 1/16W(1608)
R392	1-218-685-11	s	RESISTOR,CHIP 510 1/16W
R393	1-218-685-11	s	RESISTOR,CHIP 510 1/16W
R394	1-218-710-11	s	RESISTOR,CHIP 5.6K 1/16W(1608)
R395	1-218-718-11	s	RESISTOR CHIP 12K 1/16W (1608)
R396	1-218-680-11	s	RESISTOR,CHIP 330 1/16W(1608)
R397	1-218-680-11	s	RESISTOR,CHIP 330 1/16W(1608)
R399	1-218-718-11	s	RESISTOR CHIP 12K 1/16W (1608)
R400	1-218-708-11	s	RESISTOR,CHIP 4.7K 1/16W(1608)
R401	1-218-708-11	s	RESISTOR,CHIP 4.7K 1/16W(1608)
R402	1-218-700-11	s	RESISTOR,CHIP 2.2K 1/16W(1608)
R403	1-218-684-11	s	RESISTOR,CHIP 470 1/16W (1608)
R404	1-218-692-11	s	RESISTOR,CHIP 1.0K 1/16W(1608)
R405	1-218-694-11	s	RESISTOR,CHIP 1.2K1/16W(1608)
R406	1-218-713-11	s	RESISTOR,METAL 7.5K 1/16W
R407	1-218-693-11	s	RESISTOR,CHIP 1.1K 1/16W(1608)
R409	1-218-708-11	s	RESISTOR,CHIP 4.7K 1/16W(1608)
R410	1-218-692-11	s	RESISTOR,CHIP 1.0K 1/16W(1608)
R411	1-218-708-11	s	RESISTOR,CHIP 4.7K 1/16W(1608)
R412	1-218-716-11	s	RESISTOR,CHIP 10K 1/16W(1608)
R413	1-218-692-11	s	RESISTOR,CHIP 1.0K 1/16W(1608)
R414	1-218-732-11	s	RESISTOR,CHIP 47K 1/16W(1608)
R415	1-218-716-11	s	RESISTOR,CHIP 10K 1/16W(1608)
R416	1-218-724-11	s	RESISTOR,CHIP 22K 1/16W(1608)
R417	1-218-724-11	s	RESISTOR,CHIP 22K 1/16W(1608)
R418	1-218-716-11	s	RESISTOR,CHIP 10K 1/16W(1608)
R419	1-218-724-11	s	RESISTOR,CHIP 22K 1/16W(1608)
R420	1-218-716-11	s	RESISTOR,CHIP 10K 1/16W(1608)
R421	1-218-692-11	s	RESISTOR,CHIP 1.0K 1/16W(1608)
R422	1-218-732-11	s	RESISTOR,CHIP 47K 1/16W(1608)
R423	1-218-725-11	s	RESISTOR,CHIP 24K 1/16W(1608)
R424	1-218-668-11	s	RESISTOR,CHIP 100 1/16W (1608)
R425	1-218-700-11	s	RESISTOR,CHIP 2.2K 1/16W(1608)
R426	1-218-700-11	s	RESISTOR,CHIP 2.2K 1/16W(1608)
R427	1-218-700-11	s	RESISTOR,CHIP 2.2K 1/16W(1608)
R505	1-218-716-11	s	RESISTOR,CHIP 10K 1/16W(1608)
R506	1-218-700-11	s	RESISTOR,CHIP 2.2K 1/16W(1608)
R507	1-218-716-11	s	RESISTOR,CHIP 10K 1/16W(1608)

(DM-123/P BOARD [SUFFIX 14])

Ref. No. or Q'ty	Part No.	SP	Description
R508	1-218-717-11	s	RESISTOR,CHIP 11K 1/16W (1608)
R509	1-218-711-11	s	RESISTOR,METAL 6.2K 1/16W
R510	1-218-716-11	s	RESISTOR,CHIP 10K 1/16W(1608)
R511	1-218-708-11	s	RESISTOR,CHIP 4.7K 1/16W(1608)
R512	1-218-732-11	s	RESISTOR,CHIP 47K 1/16W(1608)
R513	1-218-679-11	s	RESISTOR,CHIP 300 1/16W (1608)
R514	1-218-718-11	s	RESISTOR CHIP 12K 1/16W (1608)
R515	1-218-716-11	s	RESISTOR,CHIP 10K 1/16W(1608)
R516	1-218-713-11	s	RESISTOR,METAL 7.5K 1/16W
R517	1-218-692-11	s	RESISTOR,CHIP 1.0K 1/16W(1608)
R518	1-218-692-11	s	RESISTOR,CHIP 1.0K 1/16W(1608)
R519	1-218-692-11	s	RESISTOR,CHIP 1.0K 1/16W(1608)
R520	1-218-660-91	s	RESISTOR,CHIP 47 1/16W (1608)
R521	1-218-660-91	s	RESISTOR,CHIP 47 1/16W (1608)
R522	1-218-701-11	s	RESISTOR,CHIP 2.4K 1/16W(1608)
R523	1-218-710-11	s	RESISTOR,CHIP 5.6K 1/16W(1608)
R524	1-218-732-11	s	RESISTOR,CHIP 47K 1/16W(1608)
R525	1-218-740-11	s	RESISTOR,CHIP 100K 1/16W(1608)
R526	1-216-853-11	s	RESISTOR,CHIP 470K 1/16W(1608)
R527	1-218-708-11	s	RESISTOR,CHIP 4.7K 1/16W(1608)
R528	1-218-726-11	s	RESISTOR CHIP 27K 1/16W (1608)
R529	1-218-668-11	s	RESISTOR,CHIP 100 1/16W (1608)
R530	1-218-711-11	s	RESISTOR,METAL 6.2K 1/16W
R531	1-218-676-11	s	RESISTOR,CHIP 220 1/16W(1608)
R532	1-218-676-11	s	RESISTOR,CHIP 220 1/16W(1608)
R533	1-218-668-11	s	RESISTOR,CHIP 100 1/16W (1608)
R534 *N	1-218-670-11	s	RESISTOR,CHIP 120 1/16W (1608)
*P	1-218-675-11	s	RESISTOR,CHIP 200 1/16W (1608)
R535	1-218-706-11	s	RESISTOR,CHIP 3.9K 1/16W(1608)
R537	1-218-721-11	s	RESISTOR,CHIP 16K 1/16W(1608)
R538	1-218-694-11	s	RESISTOR,CHIP 1.2K1/16W(1608)
R539	1-218-692-11	s	RESISTOR,CHIP 1.0K 1/16W(1608)
R540	1-218-652-11	s	RESISTOR,CHIP 22 1/16W (1608)
R541	1-218-692-11	s	RESISTOR,CHIP 1.0K 1/16W(1608)
R542	1-218-716-11	s	RESISTOR,CHIP 10K 1/16W(1608)
R543	1-218-708-11	s	RESISTOR,CHIP 4.7K 1/16W(1608)
R544 *P	1-218-652-11	s	RESISTOR,CHIP 22 1/16W (1608)
R545 *P	1-218-684-11	s	RESISTOR,CHIP 470 1/16W (1608)
R546 *P	1-218-684-11	s	RESISTOR,CHIP 470 1/16W (1608)
R548	1-218-724-11	s	RESISTOR,CHIP 22K 1/16W(1608)
R549	1-218-723-11	s	RESISTOR,CHIP 20K 1/16W(1608)
R550 *P	1-218-721-11	s	RESISTOR,CHIP 16K 1/16W(1608)
R551 *P	1-218-680-11	s	RESISTOR,CHIP 330 1/16W(1608)
R552	1-218-684-11	s	RESISTOR,CHIP 470 1/16W (1608)
R553	1-218-684-11	s	RESISTOR,CHIP 470 1/16W (1608)
R555	1-218-684-11	s	RESISTOR,CHIP 470 1/16W (1608)
R556	1-218-684-11	s	RESISTOR,CHIP 470 1/16W (1608)
R557	1-218-721-11	s	RESISTOR,CHIP 16K 1/16W(1608)
R559	1-218-680-11	s	RESISTOR,CHIP 330 1/16W(1608)
R560 *P	1-218-707-11	s	RESISTOR,CHIP 4.3K 1/16W(1608)
R561 *P	1-218-707-11	s	RESISTOR,CHIP 4.3K 1/16W(1608)
R563	1-218-692-11	s	RESISTOR,CHIP 1.0K 1/16W(1608)
R564 *P	1-218-692-11	s	RESISTOR,CHIP 1.0K 1/16W(1608)
R565	1-218-707-11	s	RESISTOR,CHIP 4.3K 1/16(1608)
R566	1-218-707-11	s	RESISTOR,CHIP 4.3K 1/16(1608)
R568	1-218-692-11	s	RESISTOR,CHIP 1.0K 1/16W(1608)
R569	1-218-692-11	s	RESISTOR,CHIP 1.0K 1/16W(1608)
R570	1-218-692-11	s	RESISTOR,CHIP 1.0K 1/16W(1608)
R571	1-218-740-11	s	RESISTOR,CHIP 100K 1/16W(1608)

(DM-123/P BOARD [SUFFIX 14])

Ref. No. or Q'ty		Part No.	SP	Description
R572	*P	1-218-668-11	s	RESISTOR,CHIP 100 1/16W (1608)
R573		1-218-692-11	s	RESISTOR,CHIP 1.0K 1/16W(1608)
R574		1-218-684-11	s	RESISTOR,CHIP 470 1/16W (1608)
R575		1-218-708-11	s	RESISTOR,CHIP 4.7K 1/16W(1608)
R576		1-218-692-11	s	RESISTOR,CHIP 1.0K 1/16W(1608)
R577		1-218-722-11	s	RESISTOR, CHIP 18K 1/16W 1608
R578		1-218-707-11	s	RESISTOR,CHIP 4.3K 1/16W(1608)
R579		1-218-708-11	s	RESISTOR,CHIP 4.7K 1/16W(1608)
R580		1-218-716-11	s	RESISTOR,CHIP 10K 1/16W(1608)
R581		1-218-736-11	s	RESISTOR,CHIP 68K 1/16W(1608)
R582		1-218-716-11	s	RESISTOR,CHIP 10K 1/16W(1608)
R583		1-218-661-11	s	RESISTOR,CHIP 51 1/16W (1608)
R584	*P	1-218-716-11	s	RESISTOR,CHIP 10K 1/16W(1608)
R585	*N	1-216-864-11	s	RESISTOR,CHIP 0 1/16W (1608)
R586		1-218-684-11	s	RESISTOR,CHIP 470 1/16W (1608)
R587		1-218-692-11	s	RESISTOR,CHIP 1.0K 1/16W(1608)
R588		1-218-652-11	s	RESISTOR,CHIP 22 1/16W (1608)
R589		1-218-652-11	s	RESISTOR,CHIP 22 1/16W (1608)
R590	*N	1-218-684-11	s	RESISTOR,CHIP 470 1/16W (1608)
	*P	1-218-679-11	s	RESISTOR,CHIP 300 1/16W (1608)
R591		1-218-692-11	s	RESISTOR,CHIP 1.0K 1/16W(1608)
R592		1-218-684-11	s	RESISTOR,CHIP 470 1/16W (1608)
R593		1-218-700-11	s	RESISTOR,CHIP 2.2K 1/16W(1608)
R594	*N	1-218-684-11	s	RESISTOR,CHIP 470 1/16W (1608)
	*P	1-218-679-11	s	RESISTOR,CHIP 300 1/16W (1608)
R595	*N	1-216-864-11	s	RESISTOR,CHIP 0 1/16W (1608)
R596	*P	1-218-652-11	s	RESISTOR,CHIP 22 1/16W (1608)
R597	*P	1-218-652-11	s	RESISTOR,CHIP 22 1/16W (1608)
R598	*P	1-218-700-11	s	RESISTOR,CHIP 2.2K 1/16W(1608)
R599	*P	1-218-700-11	s	RESISTOR,CHIP 2.2K 1/16W(1608)
R600		1-218-700-11	s	RESISTOR,CHIP 2.2K 1/16W(1608)
R601	*P	1-218-716-11	s	RESISTOR,CHIP 10K 1/16W(1608)
R602	*P	1-218-716-11	s	RESISTOR,CHIP 10K 1/16W(1608)
R603		1-218-692-11	s	RESISTOR,CHIP 1.0K 1/16W(1608)
R604		1-218-692-11	s	RESISTOR,CHIP 1.0K 1/16W(1608)
R607		1-218-716-11	s	RESISTOR,CHIP 10K 1/16W(1608)
R608		1-218-716-11	s	RESISTOR,CHIP 10K 1/16W(1608)
R609		1-218-719-11	s	RESISTOR,METAL 13K 1/16
R610		1-218-698-11	s	RESISTOR,CHIP 1.8K 1/16W(1608)
R611		1-218-692-11	s	RESISTOR,CHIP 1.0K 1/16W(1608)
R612		1-218-716-11	s	RESISTOR,CHIP 10K 1/16W(1608)
R613		1-218-684-11	s	RESISTOR,CHIP 470 1/16W (1608)
R614		1-218-668-11	s	RESISTOR,CHIP 100 1/16W (1608)
R615		1-218-668-11	s	RESISTOR,CHIP 100 1/16W (1608)
R617		1-218-668-11	s	RESISTOR,CHIP 100 1/16W (1608)
R618		1-218-692-11	s	RESISTOR,CHIP 1.0K 1/16W(1608)
R619		1-218-688-11	s	RESISTOR,CHIP 680 1/16W(1608)
R624		1-218-692-11	s	RESISTOR,CHIP 1.0K 1/16W(1608)
R625		1-218-660-91	s	RESISTOR,CHIP 47 1/16W (1608)
R626		1-218-660-91	s	RESISTOR,CHIP 47 1/16W (1608)
R627		1-218-692-11	s	RESISTOR,CHIP 1.0K 1/16W(1608)
R628		1-218-736-11	s	RESISTOR,CHIP 68K 1/16W(1608)
R629		1-218-676-11	s	RESISTOR,CHIP 220 1/16W(1608)
R630		1-218-660-91	s	RESISTOR,CHIP 47 1/16W (1608)
R631		1-218-700-11	s	RESISTOR,CHIP 2.2K 1/16W(1608)
R646		1-216-864-11	s	RESISTOR,CHIP 0 1/16W (1608)
R647		1-218-716-11	s	RESISTOR,CHIP 10K 1/16W(1608)
R703		1-218-698-11	s	RESISTOR,CHIP 1.8K 1/16W(1608)
R704		1-218-710-11	s	RESISTOR,CHIP 5.6K 1/16W(1608)

(DM-123/P BOARD [SUFFIX 14])

Ref. No. or Q'ty		Part No.	SP	Description
R705		1-218-740-11	s	RESISTOR,CHIP 100K 1/16W(1608)
R706		1-218-732-11	s	RESISTOR,CHIP 47K 1/16W(1608)
R707		1-218-711-11	s	RESISTOR,METAL 6.2K 1/16W
R708		1-218-726-11	s	RESISTOR CHIP 27K 1/16W (1608)
R709		1-218-711-11	s	RESISTOR,METAL 6.2K 1/16W
R710		1-218-676-11	s	RESISTOR,CHIP 220 1/16W(1608)
R711		1-218-676-11	s	RESISTOR,CHIP 220 1/16W(1608)
R712		1-218-681-11	s	RESISTOR CHIP 360 1/16W (1608)
R713		1-218-706-11	s	RESISTOR,CHIP 3.9K 1/16W(1608)
R714		1-218-660-91	s	RESISTOR,CHIP 47 1/16W (1608)
R715		1-218-718-11	s	RESISTOR CHIP 12K 1/16W (1608)
R716		1-218-693-11	s	RESISTOR,CHIP 1.1K 1/16W(1608)
R717		1-218-716-11	s	RESISTOR,CHIP 10K 1/16W(1608)
R718		1-218-652-11	s	RESISTOR,CHIP 22 1/16W (1608)
R719		1-218-692-11	s	RESISTOR,CHIP 1.0K 1/16W(1608)
R720	*P	1-218-684-11	s	RESISTOR,CHIP 470 1/16W (1608)
R721	*P	1-218-680-11	s	RESISTOR,CHIP 330 1/16W(1608)
R723	*P	1-218-707-11	s	RESISTOR,CHIP 4.3K 1/16W(1608)
R724	*P	1-218-713-11	s	RESISTOR,METAL 7.5K 1/16W
R725		1-218-692-11	s	RESISTOR,CHIP 1.0K 1/16W(1608)
R726		1-218-684-11	s	RESISTOR,CHIP 470 1/16W (1608)
R727		1-218-680-11	s	RESISTOR,CHIP 330 1/16W(1608)
R729		1-218-696-11	s	RESISTOR,CHIP 1.5K 1/16W(1608)
R730		1-218-701-11	s	RESISTOR,CHIP 2.4K 1/16W(1608)
R731		1-218-692-11	s	RESISTOR,CHIP 1.0K 1/16W(1608)
R732		1-218-692-11	s	RESISTOR,CHIP 1.0K 1/16W(1608)
R737		1-218-692-11	s	RESISTOR,CHIP 1.0K 1/16W(1608)
R738		1-218-698-11	s	RESISTOR,CHIP 1.8K 1/16W(1608)
R739		1-218-698-11	s	RESISTOR,CHIP 1.8K 1/16W(1608)
R740		1-218-672-11	s	RESISTOR,CHIP 150 1/16W(1608)
R741		1-218-684-11	s	RESISTOR,CHIP 470 1/16W (1608)
R742		1-218-672-11	s	RESISTOR,CHIP 150 1/16W(1608)
R743		1-218-704-11	s	RESISTOR,CHIP 3.3K 1/16W(1608)
R746		1-218-692-11	s	RESISTOR,CHIP 1.0K 1/16W(1608)
R747		1-218-708-11	s	RESISTOR,CHIP 4.7K 1/16W(1608)
R748		1-218-692-11	s	RESISTOR,CHIP 1.0K 1/16W(1608)
R749		1-218-708-11	s	RESISTOR,CHIP 4.7K 1/16W(1608)
R750		1-218-716-11	s	RESISTOR,CHIP 10K 1/16W(1608)
R751		1-218-736-11	s	RESISTOR,CHIP 68K 1/16W(1608)
R752		1-218-716-11	s	RESISTOR,CHIP 10K 1/16W(1608)
R755		1-218-661-11	s	RESISTOR,CHIP 51 1/16W (1608)
R756		1-218-722-11	s	RESISTOR, CHIP 18K 1/16W 1608
R757		1-218-707-11	s	RESISTOR,CHIP 4.3K 1/16W(1608)
R758		1-218-716-11	s	RESISTOR,CHIP 10K 1/16W(1608)
R759		1-218-716-11	s	RESISTOR,CHIP 10K 1/16W(1608)
R760	*P	1-218-652-11	s	RESISTOR,CHIP 22 1/16W (1608)
R761		1-218-652-11	s	RESISTOR,CHIP 22 1/16W (1608)
R762		1-218-719-11	s	RESISTOR,METAL 13K 1/16
R763		1-218-698-11	s	RESISTOR,CHIP 1.8K 1/16W(1608)
R764		1-218-692-11	s	RESISTOR,CHIP 1.0K 1/16W(1608)
R765		1-218-716-11	s	RESISTOR,CHIP 10K 1/16W(1608)
R766		1-218-668-11	s	RESISTOR,CHIP 100 1/16W (1608)
R767		1-218-668-11	s	RESISTOR,CHIP 100 1/16W (1608)
R768		1-218-692-11	s	RESISTOR,CHIP 1.0K 1/16W(1608)
R769		1-218-680-11	s	RESISTOR,CHIP 330 1/16W(1608)
R770		1-218-680-11	s	RESISTOR,CHIP 330 1/16W(1608)
R771		1-218-700-11	s	RESISTOR,CHIP 2.2K 1/16W(1608)
R772	*P	1-218-692-11	s	RESISTOR,CHIP 1.0K 1/16W(1608)
R773		1-218-692-11	s	RESISTOR,CHIP 1.0K 1/16W(1608)

(DM-123/P BOARD [SUFFIX 14])

Ref. No. or Q'ty	Part No.	SP	Description
R774	1-218-668-11	s	RESISTOR,CHIP 100 1/16W (1608)
R775	1-218-668-11	s	RESISTOR,CHIP 100 1/16W (1608)
R776	1-218-692-11	s	RESISTOR,CHIP 1.0K 1/16W(1608)
R777	1-218-688-11	s	RESISTOR,CHIP 680 1/16W(1608)
R781	1-218-680-11	s	RESISTOR,CHIP 330 1/16W(1608)
R784	1-218-660-91	s	RESISTOR,CHIP 47 1/16W (1608)
R785	1-218-660-91	s	RESISTOR,CHIP 47 1/16W (1608)
R901	1-218-692-11	s	RESISTOR,CHIP 1.0K 1/16W(1608)
R902	1-218-668-11	s	RESISTOR,CHIP 100 1/16W (1608)
R903	1-218-718-11	s	RESISTOR CHIP 12K 1/16W (1608)
R904	1-218-716-11	s	RESISTOR,CHIP 10K 1/16W(1608)
R905	1-218-722-11	s	RESISTOR, CHIP 18K 1/16W 1608
R906	1-218-700-11	s	RESISTOR,CHIP 2.2K 1/16W(1608)
R907	1-218-668-11	s	RESISTOR,CHIP 100 1/16W (1608)
R908	1-218-716-11	s	RESISTOR,CHIP 10K 1/16W(1608)
R909	1-218-716-11	s	RESISTOR,CHIP 10K 1/16W(1608)
R910	1-216-864-11	s	RESISTOR,CHIP 0 1/16W (1608)
R911	1-216-864-11	s	RESISTOR,CHIP 0 1/16W (1608)
R912	1-218-716-11	s	RESISTOR,CHIP 10K 1/16W(1608)
R913	1-218-668-11	s	RESISTOR,CHIP 100 1/16W (1608)
R914	1-218-740-11	s	RESISTOR,CHIP 100K 1/16W(1608)
R916	1-218-668-11	s	RESISTOR,CHIP 100 1/16W (1608)
R918	1-218-716-11	s	RESISTOR,CHIP 10K 1/16W(1608)
R919	1-218-740-11	s	RESISTOR,CHIP 100K 1/16W(1608)
R920	1-218-740-11	s	RESISTOR,CHIP 100K 1/16W(1608)
R921	1-218-740-11	s	RESISTOR,CHIP 100K 1/16W(1608)
R922	1-218-716-11	s	RESISTOR,CHIP 10K 1/16W(1608)
R925	1-218-716-11	s	RESISTOR,CHIP 10K 1/16W(1608)
R926	1-218-716-11	s	RESISTOR,CHIP 10K 1/16W(1608)
R927	1-218-728-11	s	RESISTOR,CHIP 33K 1/16W
R928	1-218-732-11	s	RESISTOR,CHIP 47K 1/16W(1608)
R929	1-218-732-11	s	RESISTOR,CHIP 47K 1/16W(1608)
R930	1-218-740-11	s	RESISTOR,CHIP 100K 1/16W(1608)
R931	1-218-740-11	s	RESISTOR,CHIP 100K 1/16W(1608)
R932	1-218-692-11	s	RESISTOR,CHIP 1.0K 1/16W(1608)
R933	1-216-864-11	s	RESISTOR,CHIP 0 1/16W (1608)
R934	1-218-716-11	s	RESISTOR,CHIP 10K 1/16W(1608)
R935	1-218-692-11	s	RESISTOR,CHIP 1.0K 1/16W(1608)
R936	1-218-732-11	s	RESISTOR,CHIP 47K 1/16W(1608)
R937	1-218-716-11	s	RESISTOR,CHIP 10K 1/16W(1608)
R938	1-218-716-11	s	RESISTOR,CHIP 10K 1/16W(1608)
R939	1-218-732-11	s	RESISTOR,CHIP 47K 1/16W(1608)
R940	1-218-716-11	s	RESISTOR,CHIP 10K 1/16W(1608)
R941	1-218-692-11	s	RESISTOR,CHIP 1.0K 1/16W(1608)
R942	1-218-716-11	s	RESISTOR,CHIP 10K 1/16W(1608)
R943	1-218-740-11	s	RESISTOR,CHIP 100K 1/16W(1608)
R944	1-218-692-11	s	RESISTOR,CHIP 1.0K 1/16W(1608)
R945	1-218-740-11	s	RESISTOR,CHIP 100K 1/16W(1608)
R946	1-216-853-11	s	RESISTOR,CHIP 470K 1/16W(1608)
R947	1-218-716-11	s	RESISTOR,CHIP 10K 1/16W(1608)
R948	1-218-716-11	s	RESISTOR,CHIP 10K 1/16W(1608)
R949	1-218-716-11	s	RESISTOR,CHIP 10K 1/16W(1608)
R950	1-218-692-11	s	RESISTOR,CHIP 1.0K 1/16W(1608)
R951	1-218-692-11	s	RESISTOR,CHIP 1.0K 1/16W(1608)
R952	1-216-809-11	s	RESISTOR,CHIP 100 1/16W 1608
R954	1-218-716-11	s	RESISTOR,CHIP 10K 1/16W(1608)
R993	1-218-740-11	s	RESISTOR,CHIP 100K 1/16W(1608)
R995	1-218-716-11	s	RESISTOR,CHIP 10K 1/16W(1608)
R1002	1-216-864-11	s	RESISTOR,CHIP 0 1/16W (1608)

(DM-123/P BOARD [SUFFIX 14])

Ref. No. or Q'ty	Part No.	SP	Description
R1003	1-216-864-11	s	RESISTOR,CHIP 0 1/16W (1608)
R1004	1-218-748-11	s	RESISTOR,CHIP 220K 1/16W(1608)
R1005	1-218-752-11	s	RESISTOR,CHIP 330K 1/16W(1608)
R1006	1-218-716-11	s	RESISTOR,CHIP 10K 1/16W(1608)
R1007	1-216-864-11	s	RESISTOR,CHIP 0 1/16W (1608)
R1008	1-216-864-11	s	RESISTOR,CHIP 0 1/16W (1608)
R1012	1-216-864-11	s	RESISTOR,CHIP 0 1/16W (1608)
R1015	1-216-864-11	s	RESISTOR,CHIP 0 1/16W (1608)
R1017	1-216-864-11	s	RESISTOR,CHIP 0 1/16W (1608)
R1019	1-218-716-11	s	RESISTOR,CHIP 10K 1/16W(1608)
R1020	1-216-864-11	s	CONDUCTOR, CHIP (1608)
R1021	1-216-864-11	s	CONDUCTOR, CHIP (1608)
R1022	1-218-692-11	s	RESISTOR,CHIP 1.0K 1/16W(1608)
R1023	1-216-864-11	s	CONDUCTOR, CHIP (1608)
R1114	1-218-680-11	s	RESISTOR,CHIP 330 1/16W(1608)
R1115	1-218-680-11	s	RESISTOR,CHIP 330 1/16W(1608)
R1116	1-218-660-91	s	RESISTOR,CHIP 47 1/16W (1608)
R1117	1-218-692-11	s	RESISTOR,CHIP 1.0K 1/16W(1608)
R1118	1-218-686-11	s	RESISTOR CHIP 560 1/16W (1608)
R1119	1-218-700-11	s	RESISTOR,CHIP 2.2K 1/16W(1608)
R1120	1-218-682-11	s	RESISTOR,CHIP 390 1/16W (1608)
R1121	1-218-683-11	s	RESISTOR CHIP 430 1/16W (1608)
R1122	1-218-740-11	s	RESISTOR,CHIP 100K 1/16W(1608)
R1123	1-216-857-11	s	RESISTOR,CHIP 1M 1/16W(1608)
R1124	1-218-724-11	s	RESISTOR,CHIP 22K 1/16W(1608)
R1125	1-218-700-11	s	RESISTOR,CHIP 2.2K 1/16W(1608)
R1126	1-218-704-11	s	RESISTOR,CHIP 3.3K 1/16W(1608)
R1127	1-218-716-11	s	RESISTOR,CHIP 10K 1/16W(1608)
R1128	1-218-720-11	s	RESISTOR,CHIP 15K 1/16W(1608)
R1129 *N	1-218-752-11	s	RESISTOR,CHIP 330K 1/16W(1608)
*P	1-218-716-11	s	RESISTOR,CHIP 10K 1/16W(1608)
R1135	1-218-702-11	s	RESISTOR CHIP 2.7K 1/16W(1608)
R1137	1-218-752-11	s	RESISTOR,CHIP 330K 1/16W(1608)
R1138	1-218-700-11	s	RESISTOR,CHIP 2.2K 1/16W(1608)
R1139	1-218-718-11	s	RESISTOR CHIP 12K 1/16W (1608)
R1142	1-218-714-11	s	RESISTOR,CHIP 8.2K 1/16W(1608)
R1144	1-218-740-11	s	RESISTOR,CHIP 100K 1/16W(1608)
R1145	1-218-740-11	s	RESISTOR,CHIP 100K 1/16W(1608)
R1146	1-218-708-11	s	RESISTOR,CHIP 4.7K 1/16W(1608)
R1147	1-218-716-11	s	RESISTOR,CHIP 10K 1/16W(1608)
R1148	1-216-864-11	s	RESISTOR,CHIP 0 1/16W (1608)
R1150	1-218-700-11	s	RESISTOR,CHIP 2.2K 1/16W(1608)
R1152	1-218-700-11	s	RESISTOR,CHIP 2.2K 1/16W(1608)
R1153	1-218-660-91	s	RESISTOR,CHIP 47 1/16W (1608)
R1154	1-218-660-91	s	RESISTOR,CHIP 47 1/16W (1608)
R1155	1-218-716-11	s	RESISTOR,CHIP 10K 1/16W(1608)
R1156	1-218-715-11	s	RESISTOR,METAL 9.1K 1/16W
R1157	1-218-660-91	s	RESISTOR,CHIP 47 1/16W (1608)
R1158	1-218-676-11	s	RESISTOR,CHIP 220 1/16W(1608)
R1159	1-218-676-11	s	RESISTOR,CHIP 220 1/16W(1608)
R1160	1-218-684-11	s	RESISTOR,CHIP 470 1/16W (1608)
R1161	1-218-684-11	s	RESISTOR,CHIP 470 1/16W (1608)
R1162	1-218-684-11	s	RESISTOR,CHIP 470 1/16W (1608)
R1163	1-218-684-11	s	RESISTOR,CHIP 470 1/16W (1608)
R1164	1-218-670-11	s	RESISTOR,CHIP 120 1/16W (1608)
R1165	1-218-670-11	s	RESISTOR,CHIP 120 1/16W (1608)
R1166	1-218-718-11	s	RESISTOR CHIP 12K 1/16W (1608)
R1167	1-218-724-11	s	RESISTOR,CHIP 22K 1/16W(1608)
R1168	1-218-740-11	s	RESISTOR,CHIP 100K 1/16W(1608)

(DM-123/P BOARD [SUFFIX 14])

Ref. No. or Q'ty	Part No.	SP	Description
R1169	1-218-670-11	s	RESISTOR,CHIP 120 1/16W (1608)
R1171	1-218-726-11	s	RESISTOR CHIP 27K 1/16W (1608)
R1172	1-218-726-11	s	RESISTOR CHIP 27K 1/16W (1608)
R1209	1-218-680-11	s	RESISTOR,CHIP 330 1/16W(1608)
R1210	1-218-680-11	s	RESISTOR,CHIP 330 1/16W(1608)
R1211	1-218-660-91	s	RESISTOR,CHIP 47 1/16W (1608)
R1212	1-218-692-11	s	RESISTOR,CHIP 1.0K 1/16W(1608)
R1213	1-218-686-11	s	RESISTOR CHIP 560 1/16W (1608)
R1214	1-218-686-11	s	RESISTOR CHIP 560 1/16W (1608)
R1215	1-218-683-11	s	RESISTOR CHIP 430 1/16W (1608)
R1216	1-218-700-11	s	RESISTOR,CHIP 2.2K 1/16W(1608)
R1217	1-218-740-11	s	RESISTOR,CHIP 100K 1/16W(1608)
R1219	1-216-857-11	s	RESISTOR,CHIP 1M 1/16W(1608)
R1220	1-218-724-11	s	RESISTOR,CHIP 22K 1/16W(1608)
R1221	1-218-700-11	s	RESISTOR,CHIP 2.2K 1/16W(1608)
R1222	1-218-704-11	s	RESISTOR,CHIP 3.3K 1/16W(1608)
R1224	1-218-723-11	s	RESISTOR,CHIP 20K 1/16W(1608)
R1225	1-218-722-11	s	RESISTOR, CHIP 18K 1/16W 1608
R1231	1-218-752-11	s	RESISTOR,CHIP 330K 1/16W(1608)
R1233	1-218-700-11	s	RESISTOR,CHIP 2.2K 1/16W(1608)
R1237	1-218-714-11	s	RESISTOR,CHIP 8.2K 1/16W(1608)
R1240	1-218-708-11	s	RESISTOR,CHIP 4.7K 1/16W(1608)
R1241	1-218-716-11	s	RESISTOR,CHIP 10K 1/16W(1608)
R1242	1-218-700-11	s	RESISTOR,CHIP 2.2K 1/16W(1608)
R1244	1-216-864-11	s	RESISTOR,CHIP 0 1/16W (1608)
R1246	1-218-700-11	s	RESISTOR,CHIP 2.2K 1/16W(1608)
R1247	1-218-660-91	s	RESISTOR,CHIP 47 1/16W (1608)
R1248	1-218-660-91	s	RESISTOR,CHIP 47 1/16W (1608)
R1249	1-218-716-11	s	RESISTOR,CHIP 10K 1/16W(1608)
R1250	1-218-715-11	s	RESISTOR,METAL 9.1K 1/16W
R1251	1-218-660-91	s	RESISTOR,CHIP 47 1/16W (1608)
R1252	1-218-676-11	s	RESISTOR,CHIP 220 1/16W(1608)
R1253	1-218-676-11	s	RESISTOR,CHIP 220 1/16W(1608)
R1268	1-218-740-11	s	RESISTOR,CHIP 100K 1/16W(1608)
R1301	1-216-864-11	s	RESISTOR,CHIP 0 1/16W (1608)
R1306	1-218-708-11	s	RESISTOR,CHIP 4.7K 1/16W(1608)
R1307	1-218-724-11	s	RESISTOR,CHIP 22K 1/16W(1608)
R1308	1-218-714-11	s	RESISTOR,CHIP 8.2K 1/16W(1608)
R1309	1-218-716-11	s	RESISTOR,CHIP 10K 1/16W(1608)
R1310	1-218-726-11	s	RESISTOR CHIP 27K 1/16W (1608)
R1311	1-218-660-91	s	RESISTOR,CHIP 47 1/16W (1608)
R1312	1-218-694-11	s	RESISTOR,CHIP 1.2K1/16W(1608)
R1313	1-218-668-11	s	RESISTOR,CHIP 100 1/16W (1608)
R1314	1-218-700-11	s	RESISTOR,CHIP 2.2K 1/16W(1608)
R1315	1-218-676-11	s	RESISTOR,CHIP 220 1/16W(1608)
R1316	1-218-692-11	s	RESISTOR,CHIP 1.0K 1/16W(1608)
R1317	1-218-700-11	s	RESISTOR,CHIP 2.2K 1/16W(1608)
R1318	1-218-684-11	s	RESISTOR,CHIP 470 1/16W (1608)
R1319	1-218-716-11	s	RESISTOR,CHIP 10K 1/16W(1608)
R1320	1-218-716-11	s	RESISTOR,CHIP 10K 1/16W(1608)
R1321	1-218-728-11	s	RESISTOR,CHIP 33K 1/16W
R1322	1-218-728-11	s	RESISTOR,CHIP 33K 1/16W
R1323	1-216-864-11	s	RESISTOR,CHIP 0 1/16W (1608)
R1324	1-218-716-11	s	RESISTOR,CHIP 10K 1/16W(1608)
R1325	1-218-724-11	s	RESISTOR,CHIP 22K 1/16W(1608)
R1326	1-218-724-11	s	RESISTOR,CHIP 22K 1/16W(1608)
R1327	1-218-676-11	s	RESISTOR,CHIP 220 1/16W(1608)
R1328	1-218-740-11	s	RESISTOR,CHIP 100K 1/16W(1608)
R1329	1-218-716-11	s	RESISTOR,CHIP 10K 1/16W(1608)

(DM-123/P BOARD [SUFFIX 14])

Ref. No. or Q'ty	Part No.	SP	Description
R1330	1-218-740-11	s	RESISTOR,CHIP 100K 1/16W(1608)
R1332	1-218-668-11	s	RESISTOR,CHIP 100 1/16W (1608)
R1333	1-218-668-11	s	RESISTOR,CHIP 100 1/16W (1608)
R1334	1-218-700-11	s	RESISTOR,CHIP 2.2K 1/16W(1608)
R1335	1-218-668-11	s	RESISTOR,CHIP 100 1/16W (1608)
R1336	1-218-668-11	s	RESISTOR,CHIP 100 1/16W (1608)
R1337	1-218-668-11	s	RESISTOR,CHIP 100 1/16W (1608)
R1338	1-218-724-11	s	RESISTOR,CHIP 22K 1/16W(1608)
R1339	1-218-730-11	s	RESISTOR METAL FILM CHIP 39K
R1340	1-218-716-11	s	RESISTOR,CHIP 10K 1/16W(1608)
R1341	1-218-716-11	s	RESISTOR,CHIP 10K 1/16W(1608)
R1342	1-218-716-11	s	RESISTOR,CHIP 10K 1/16W(1608)
R1343	1-218-714-11	s	RESISTOR,CHIP 8.2K 1/16W(1608)
R1344	1-218-700-11	s	RESISTOR,CHIP 2.2K 1/16W(1608)
R1345	1-218-684-11	s	RESISTOR,CHIP 470 1/16W (1608)
R1346	1-218-716-11	s	RESISTOR,CHIP 10K 1/16W(1608)
R1349	1-218-684-11	s	RESISTOR,CHIP 470 1/16W (1608)
R1350	1-216-863-11	s	RESISTOR,CHIP 3.3M 1/16W 1608
R1351	1-218-702-11	s	RESISTOR CHIP 2.7K 1/16W(1608)
R1352	1-218-686-11	s	RESISTOR CHIP 560 1/16W (1608)
R1353	1-218-708-11	s	RESISTOR,CHIP 4.7K 1/16W(1608)
R1354	1-218-684-11	s	RESISTOR,CHIP 470 1/16W (1608)
R1355	1-218-676-11	s	RESISTOR,CHIP 220 1/16W(1608)
R1356	1-218-676-11	s	RESISTOR,CHIP 220 1/16W(1608)
R1357	1-218-676-11	s	RESISTOR,CHIP 220 1/16W(1608)
R1358	1-216-863-11	s	RESISTOR,CHIP 3.3M 1/16W 1608
R1359	1-218-716-11	s	RESISTOR,CHIP 10K 1/16W(1608)
R1360	1-218-701-11	s	RESISTOR,CHIP 2.4K 1/16W(1608)
R1361	1-218-664-11	s	RESISTOR,CHIP 68 1/16W (1608)
R1362	1-218-692-11	s	RESISTOR,CHIP 1.0K 1/16W(1608)
R1363	1-218-722-11	s	RESISTOR, CHIP 18K 1/16W 1608
R1364	1-218-717-11	s	RESISTOR,CHIP 11K 1/16W (1608)
R1367	1-218-700-11	s	RESISTOR,CHIP 2.2K 1/16W(1608)
R1368	1-218-694-11	s	RESISTOR,CHIP 1.2K1/16W(1608)
R1369	1-218-708-11	s	RESISTOR,CHIP 4.7K 1/16W(1608)
R1370	1-216-857-11	s	RESISTOR,CHIP 1M 1/16W(1608)
R1371	1-218-668-11	s	RESISTOR,CHIP 100 1/16W (1608)
R1372	1-218-676-11	s	RESISTOR,CHIP 220 1/16W(1608)
R1373	1-218-722-11	s	RESISTOR, CHIP 18K 1/16W 1608
R1374	1-218-692-11	s	RESISTOR,CHIP 1.0K 1/16W(1608)
R1375	1-218-716-11	s	RESISTOR,CHIP 10K 1/16W(1608)
R1376	1-218-704-11	s	RESISTOR,CHIP 3.3K 1/16W(1608)
R1377	1-218-716-11	s	RESISTOR,CHIP 10K 1/16W(1608)
R1378	1-218-700-11	s	RESISTOR,CHIP 2.2K 1/16W(1608)
R1379	1-218-718-11	s	RESISTOR CHIP 12K 1/16W (1608)
R1380	1-218-668-11	s	RESISTOR,CHIP 100 1/16W (1608)
R1381	1-218-676-11	s	RESISTOR,CHIP 220 1/16W(1608)
R1382	1-218-687-11	s	RESISTOR CHIP 620 1/16W (1608)
R1383	1-218-676-11	s	RESISTOR,CHIP 220 1/16W(1608)
R1384	1-218-700-11	s	RESISTOR,CHIP 2.2K 1/16W(1608)
R1385	1-218-700-11	s	RESISTOR,CHIP 2.2K 1/16W(1608)
R1386	1-218-676-11	s	RESISTOR,CHIP 220 1/16W(1608)
R1387	1-218-680-11	s	RESISTOR,CHIP 330 1/16W(1608)
R1388	1-218-704-11	s	RESISTOR,CHIP 3.3K 1/16W(1608)
R1390	1-218-703-11	s	RESISTOR,CHIP 3.0K 1/16(1608)
R1391	1-218-718-11	s	RESISTOR CHIP 12K 1/16W (1608)
R1392	1-218-732-11	s	RESISTOR,CHIP 47K 1/16W(1608)
R1393	1-218-732-11	s	RESISTOR,CHIP 47K 1/16W(1608)
R1394	1-218-700-11	s	RESISTOR,CHIP 2.2K 1/16W(1608)

(DM-123/P BOARD [SUFFIX 14])

Ref. No. or Q'ty	Part No.	SP	Description
R1395	1-218-700-11	s	RESISTOR,CHIP 2.2K 1/16W(1608)
R1396	1-218-704-11	s	RESISTOR,CHIP 3.3K 1/16W(1608)
R1397	1-218-704-11	s	RESISTOR,CHIP 3.3K 1/16W(1608)
R1398	1-218-752-11	s	RESISTOR,CHIP 330K 1/16W(1608)
R1399	1-218-700-11	s	RESISTOR,CHIP 2.2K 1/16W(1608)
R1401	1-218-716-11	s	RESISTOR,CHIP 10K 1/16W(1608)
R1402	1-218-716-11	s	RESISTOR,CHIP 10K 1/16W(1608)
R1404	1-218-736-11	s	RESISTOR,CHIP 68K 1/16W(1608)
R1406	1-218-668-11	s	RESISTOR,CHIP 100 1/16W (1608)
R1410	1-218-722-11	s	RESISTOR, CHIP 18K 1/16W 1608
R1412	1-218-700-11	s	RESISTOR,CHIP 2.2K 1/16W(1608)
R1423	1-218-676-11	s	RESISTOR,CHIP 220 1/16W(1608)
R1424	1-218-676-11	s	RESISTOR,CHIP 220 1/16W(1608)
R1425	1-218-660-91	s	RESISTOR,CHIP 47 1/16W (1608)
R1426	1-216-864-11	s	RESISTOR,CHIP 0 1/16W (1608)
R1428	1-218-660-91	s	RESISTOR,CHIP 47 1/16W (1608)
R1429	1-218-668-11	s	RESISTOR,CHIP 100 1/16W (1608)
R1432	1-218-668-11	s	RESISTOR,CHIP 100 1/16W (1608)
R1435	1-218-668-11	s	RESISTOR,CHIP 100 1/16W (1608)
R1436	1-218-668-11	s	RESISTOR,CHIP 100 1/16W (1608)
R1438	1-218-715-11	s	RESISTOR,METAL 9.1K 1/16W
R1439	1-218-713-11	s	RESISTOR,METAL 7.5K 1/16W
R1443	1-218-712-11	s	RESISTOR,METAL 6.8K 1/16W
R1446	1-216-864-11	s	RESISTOR,CHIP 0 1/16W (1608)
R1447	1-216-864-11	s	RESISTOR,CHIP 0 1/16W (1608)
R1449	1-218-705-11	s	RESISTOR,CHIP 3.6K 1/16W(1608)
R1450	1-218-710-11	s	RESISTOR,CHIP 5.6K 1/16W(1608)
R1452	1-218-716-11	s	RESISTOR,CHIP 10K 1/16W(1608)
R1453	1-218-716-11	s	RESISTOR,CHIP 10K 1/16W(1608)
R1456	1-218-716-11	s	RESISTOR,CHIP 10K 1/16W(1608)
R1467	1-218-716-11	s	RESISTOR,CHIP 10K 1/16W(1608)
R1480	1-218-716-11	s	RESISTOR,CHIP 10K 1/16W(1608)
R1481	1-218-704-11	s	RESISTOR,CHIP 3.3K 1/16W(1608)
R1482	1-218-692-11	s	RESISTOR,CHIP 1.0K 1/16W(1608)
R1483	1-218-692-11	s	RESISTOR,CHIP 1.0K 1/16W(1608)
R1484	1-218-692-11	s	RESISTOR,CHIP 1.0K 1/16W(1608)
R1485	1-218-680-11	s	RESISTOR,CHIP 330 1/16W(1608)
R1486	1-218-704-11	s	RESISTOR,CHIP 3.3K 1/16W(1608)
R1487	1-218-724-11	s	RESISTOR,CHIP 22K 1/16W(1608)
R1488	1-218-725-11	s	RESISTOR,CHIP 24K 1/16W(1608)
R1489	1-218-699-11	s	RESISTOR,CHIP 2.0K 1/16W(1608)
R1490	1-218-708-11	s	RESISTOR,CHIP 4.7K 1/16W(1608)
R1491	1-218-699-11	s	RESISTOR,CHIP 2.0K 1/16W(1608)
R1492	1-218-692-11	s	RESISTOR,CHIP 1.0K 1/16W(1608)
R1493	1-216-864-11	s	RESISTOR,CHIP 0 1/16W (1608)
R1494	1-218-708-11	s	RESISTOR,CHIP 4.7K 1/16W(1608)
R1495	1-218-660-91	s	RESISTOR,CHIP 47 1/16W (1608)
R1496	1-218-732-11	s	RESISTOR,CHIP 47K 1/16W(1608)
R1497	1-218-724-11	s	RESISTOR,CHIP 22K 1/16W(1608)
R1498	1-218-729-11	s	RESISTOR,CHIP 36K 1/16W(1608)
R1505	1-218-724-11	s	RESISTOR,CHIP 22K 1/16W(1608)
R1506	1-218-714-11	s	RESISTOR,CHIP 8.2K 1/16W(1608)
R1507	1-218-660-91	s	RESISTOR,CHIP 47 1/16W (1608)
R1508	1-218-716-11	s	RESISTOR,CHIP 10K 1/16W(1608)
R1509	1-218-726-11	s	RESISTOR CHIP 27K 1/16W (1608)
R1510	1-218-692-11	s	RESISTOR,CHIP 1.0K 1/16W(1608)
R1511	1-218-668-11	s	RESISTOR,CHIP 100 1/16W (1608)
R1512	1-218-700-11	s	RESISTOR,CHIP 2.2K 1/16W(1608)
R1513	1-218-676-11	s	RESISTOR,CHIP 220 1/16W(1608)

(DM-123/P BOARD [SUFFIX 14])

Ref. No. or Q'ty	Part No.	SP	Description
R1514	1-218-692-11	s	RESISTOR,CHIP 1.0K 1/16W(1608)
R1515	1-218-700-11	s	RESISTOR,CHIP 2.2K 1/16W(1608)
R1516	1-218-684-11	s	RESISTOR,CHIP 470 1/16W (1608)
R1517	1-218-716-11	s	RESISTOR,CHIP 10K 1/16W(1608)
R1518	1-218-716-11	s	RESISTOR,CHIP 10K 1/16W(1608)
R1519	1-218-728-11	s	RESISTOR,CHIP 33K 1/16W
R1520	1-218-728-11	s	RESISTOR,CHIP 33K 1/16W
R1521	1-216-864-11	s	RESISTOR,CHIP 0 1/16W (1608)
R1522	1-218-732-11	s	RESISTOR,CHIP 47K 1/16W(1608)
R1523	1-216-864-11	s	RESISTOR,CHIP 0 1/16W (1608)
R1524	1-218-716-11	s	RESISTOR,CHIP 10K 1/16W(1608)
R1525	1-218-724-11	s	RESISTOR,CHIP 22K 1/16W(1608)
R1526	1-218-724-11	s	RESISTOR,CHIP 22K 1/16W(1608)
R1527	1-218-668-11	s	RESISTOR,CHIP 100 1/16W (1608)
R1528	1-218-740-11	s	RESISTOR,CHIP 100K 1/16W(1608)
R1529	1-218-716-11	s	RESISTOR,CHIP 10K 1/16W(1608)
R1530	1-218-740-11	s	RESISTOR,CHIP 100K 1/16W(1608)
R1531	1-216-864-11	s	RESISTOR,CHIP 0 1/16W (1608)
R1533	1-218-668-11	s	RESISTOR,CHIP 100 1/16W (1608)
R1535	1-218-668-11	s	RESISTOR,CHIP 100 1/16W (1608)
R1536	1-218-668-11	s	RESISTOR,CHIP 100 1/16W (1608)
R1537	1-218-700-11	s	RESISTOR,CHIP 2.2K 1/16W(1608)
R1538	1-218-730-11	s	RESISTOR METAL FILM CHIP 39K
R1539	1-218-716-11	s	RESISTOR,CHIP 10K 1/16W(1608)
R1541	1-218-723-11	s	RESISTOR,CHIP 20K 1/16W(1608)
R1542	1-218-724-11	s	RESISTOR,CHIP 22K 1/16W(1608)
R1546	1-218-716-11	s	RESISTOR,CHIP 10K 1/16W(1608)
R1547	1-218-723-11	s	RESISTOR,CHIP 20K 1/16W(1608)
R1548	1-218-716-11	s	RESISTOR,CHIP 10K 1/16W(1608)
R1549	1-218-716-11	s	RESISTOR,CHIP 10K 1/16W(1608)
R1550	1-216-864-11	s	RESISTOR,CHIP 0 1/16W (1608)
R1551	1-218-710-11	s	RESISTOR,CHIP 5.6K 1/16W(1608)
R1552	1-218-720-11	s	RESISTOR,CHIP 15K 1/16W(1608)
R1553	1-218-716-11	s	RESISTOR,CHIP 10K 1/16W(1608)
R1554	1-218-718-11	s	RESISTOR CHIP 12K 1/16W (1608)
R1555	1-218-668-11	s	RESISTOR,CHIP 100 1/16W (1608)
R1556 *N	1-218-748-11	s	RESISTOR,CHIP 220K 1/16W(1608)
*P	1-218-740-11	s	RESISTOR,CHIP 100K 1/16W(1608)
R1557	1-218-676-11	s	RESISTOR,CHIP 220 1/16W(1608)
R1559	1-218-700-11	s	RESISTOR,CHIP 2.2K 1/16W(1608)
R1560	1-218-684-11	s	RESISTOR,CHIP 470 1/16W (1608)
R1561	1-218-716-11	s	RESISTOR,CHIP 10K 1/16W(1608)
R1562	1-218-712-11	s	RESISTOR,METAL 6.8K 1/16W
R1563	1-218-684-11	s	RESISTOR,CHIP 470 1/16W (1608)
R1564	1-218-719-11	s	RESISTOR,CHIP 13K 1/16W (1608)
R1565	1-218-722-11	s	RESISTOR, CHIP 18K 1/16W 1608
R1566	1-218-711-11	s	RESISTOR CHIP 6.2K 1/16W (1608)
R1567	1-216-863-11	s	RESISTOR,CHIP 3.3M 1/16W 1608
R1568	1-218-684-11	s	RESISTOR,CHIP 470 1/16W (1608)
R1571	1-218-676-11	s	RESISTOR,CHIP 220 1/16W(1608)
R1572	1-218-676-11	s	RESISTOR,CHIP 220 1/16W(1608)
R1575	1-218-676-11	s	RESISTOR,CHIP 220 1/16W(1608)
R1576	1-216-855-11	s	RESISTOR, CHIP 680K 1/16W 1608
R1578 *N	1-218-703-11	s	RESISTOR,CHIP 3.0K 1/16(1608)
*P	1-218-702-11	s	RESISTOR CHIP 2.7K 1/16W(1608)
R1579 *N	1-218-662-11	s	RESISTOR,CHIP 56 1/16W (1608)
*P	1-218-666-11	s	RESISTOR,CHIP 82 1/16W (1608)
R1580	1-218-692-11	s	RESISTOR,CHIP 1.0K 1/16W(1608)
R1583 *N	1-218-702-11	s	RESISTOR CHIP 2.7K 1/16W(1608)
*P	1-218-701-11	s	RESISTOR,CHIP 2.4K 1/16W(1608)

(DM-123/P BOARD [SUFFIX 14])

Ref. No. or Q'ty	Part No.	SP	Description
R1584	1-218-696-11	s	RESISTOR,CHIP 1.5K 1/16W(1608)
R1585	1-216-857-11	s	RESISTOR,CHIP 1M 1/16W(1608)
R1586	1-218-708-11	s	RESISTOR,CHIP 4.7K 1/16W(1608)
R1587	1-218-684-11	s	RESISTOR,CHIP 470 1/16W (1608)
R1588	1-218-676-11	s	RESISTOR,CHIP 220 1/16W(1608)
R1590	1-218-704-11	s	RESISTOR,CHIP 3.3K 1/16W(1608)
R1591	1-218-716-11	s	RESISTOR,CHIP 10K 1/16W(1608)
R1592	1-218-716-11	s	RESISTOR,CHIP 10K 1/16W(1608)
R1593	1-218-700-11	s	RESISTOR,CHIP 2.2K 1/16W(1608)
R1594	1-218-718-11	s	RESISTOR CHIP 12K 1/16W (1608)
R1595	1-218-676-11	s	RESISTOR,CHIP 220 1/16W(1608)
R1596	1-218-676-11	s	RESISTOR,CHIP 220 1/16W(1608)
R1597	1-218-680-11	s	RESISTOR,CHIP 330 1/16W(1608)
R1598	1-218-668-11	s	RESISTOR,CHIP 100 1/16W (1608)
R1599	1-218-706-11	s	RESISTOR,CHIP 3.9K 1/16W(1608)
R1600	1-218-676-11	s	RESISTOR,CHIP 220 1/16W(1608)
R1601	1-218-680-11	s	RESISTOR,CHIP 330 1/16W(1608)
R1602	1-218-704-11	s	RESISTOR,CHIP 3.3K 1/16W(1608)
R1603	1-218-700-11	s	RESISTOR,CHIP 2.2K 1/16W(1608)
R1605	1-218-703-11	s	RESISTOR,CHIP 3.0K 1/16(1608)
R1606	1-218-718-11	s	RESISTOR CHIP 12K 1/16W (1608)
R1607	1-218-732-11	s	RESISTOR,CHIP 47K 1/16W(1608)
R1608	1-218-732-11	s	RESISTOR,CHIP 47K 1/16W(1608)
R1609	1-218-700-11	s	RESISTOR,CHIP 2.2K 1/16W(1608)
R1610	1-218-700-11	s	RESISTOR,CHIP 2.2K 1/16W(1608)
R1611	1-218-704-11	s	RESISTOR,CHIP 3.3K 1/16W(1608)
R1612	1-218-752-11	s	RESISTOR,CHIP 330K 1/16W(1608)
R1614	1-218-700-11	s	RESISTOR,CHIP 2.2K 1/16W(1608)
R1623 *N	1-218-702-11	s	RESISTOR CHIP 2.7K 1/16W(1608)
*P	1-218-716-11	s	RESISTOR,CHIP 10K 1/16W(1608)
R1626	1-218-708-11	s	RESISTOR,CHIP 4.7K 1/16W(1608)
R1637	1-218-676-11	s	RESISTOR,CHIP 220 1/16W(1608)
R1638	1-218-676-11	s	RESISTOR,CHIP 220 1/16W(1608)
R1639	1-218-660-91	s	RESISTOR,CHIP 47 1/16W (1608)
R1640	1-218-660-91	s	RESISTOR,CHIP 47 1/16W (1608)
R1645	1-218-668-11	s	RESISTOR,CHIP 100 1/16W (1608)
R1649	1-218-708-11	s	RESISTOR,CHIP 4.7K 1/16W(1608)
R1650	1-216-864-11	s	RESISTOR,CHIP 0 1/16W (1608)
R1680	1-218-716-11	s	RESISTOR,CHIP 10K 1/16W(1608)
R1681	1-218-704-11	s	RESISTOR,CHIP 3.3K 1/16W(1608)
R1682	1-218-692-11	s	RESISTOR,CHIP 1.0K 1/16W(1608)
R1683	1-218-692-11	s	RESISTOR,CHIP 1.0K 1/16W(1608)
R1684	1-218-692-11	s	RESISTOR,CHIP 1.0K 1/16W(1608)
R1685	1-218-680-11	s	RESISTOR,CHIP 330 1/16W(1608)
R1686	1-218-704-11	s	RESISTOR,CHIP 3.3K 1/16W(1608)
R1687	1-218-724-11	s	RESISTOR,CHIP 22K 1/16W(1608)
R1688	1-218-725-11	s	RESISTOR,CHIP 24K 1/16W(1608)
R1689	1-218-699-11	s	RESISTOR,CHIP 2.0K 1/16W(1608)
R1690	1-218-708-11	s	RESISTOR,CHIP 4.7K 1/16W(1608)
R1691	1-218-699-11	s	RESISTOR,CHIP 2.0K 1/16W(1608)
R1692	1-218-692-11	s	RESISTOR,CHIP 1.0K 1/16W(1608)
R1693	1-216-864-11	s	RESISTOR,CHIP 0 1/16W (1608)
R1694	1-218-708-11	s	RESISTOR,CHIP 4.7K 1/16W(1608)
R1695	1-218-660-91	s	RESISTOR,CHIP 47 1/16W (1608)
R1696	1-218-704-11	s	RESISTOR,CHIP 3.3K 1/16W(1608)
R1697	1-218-736-11	s	RESISTOR,CHIP 68K 1/16W(1608)
R1699	1-218-668-11	s	RESISTOR,CHIP 100 1/16W (1608)
R1702	1-218-660-91	s	RESISTOR,CHIP 47 1/16W (1608)
R1703	1-218-660-91	s	RESISTOR,CHIP 47 1/16W (1608)

(DM-123/P BOARD [SUFFIX 14])

Ref. No. or Q'ty	Part No.	SP	Description
R1704	1-218-660-91	s	RESISTOR,CHIP 47 1/16W (1608)
R1705	1-218-660-91	s	RESISTOR,CHIP 47 1/16W (1608)
R1706	1-218-668-11	s	RESISTOR,CHIP 100 1/16W (1608)
R1707	1-218-668-11	s	RESISTOR,CHIP 100 1/16W (1608)
R1711	1-218-660-91	s	RESISTOR,CHIP 47 1/16W (1608)
R1712	1-218-660-91	s	RESISTOR,CHIP 47 1/16W (1608)
R1713	1-218-660-91	s	RESISTOR,CHIP 47 1/16W (1608)
R1714	1-218-660-91	s	RESISTOR,CHIP 47 1/16W (1608)
R1715	1-218-660-91	s	RESISTOR,CHIP 47 1/16W (1608)
R1716	1-218-660-91	s	RESISTOR,CHIP 47 1/16W (1608)
R1717	1-216-864-11	s	RESISTOR,CHIP 0 1/16W (1608)
R1719	1-218-668-11	s	RESISTOR,CHIP 100 1/16W (1608)
R1721	1-216-864-11	s	RESISTOR,CHIP 0 1/16W (1608)
R1722	1-216-864-11	s	RESISTOR,CHIP 0 1/16W (1608)
R1723	1-218-700-11	s	RESISTOR,CHIP 2.2K 1/16W(1608)
R1724	1-218-668-11	s	RESISTOR,CHIP 100 1/16W (1608)
R1725	1-218-740-11	s	RESISTOR,CHIP 100K 1/16W(1608)
R1726	1-218-740-11	s	RESISTOR,CHIP 100K 1/16W(1608)
R1727	1-218-660-91	s	RESISTOR,CHIP 47 1/16W (1608)
R1728	1-218-660-91	s	RESISTOR,CHIP 47 1/16W (1608)
R1731	1-218-668-11	s	RESISTOR,CHIP 100 1/16W (1608)
R1732	1-218-668-11	s	RESISTOR,CHIP 100 1/16W (1608)
R1733	1-218-700-11	s	RESISTOR,CHIP 2.2K 1/16W(1608)
R1734	1-218-740-11	s	RESISTOR,CHIP 100K 1/16W(1608)
R1735	1-216-864-11	s	RESISTOR,CHIP 0 1/16W (1608)
R1736	1-216-864-11	s	RESISTOR,CHIP 0 1/16W (1608)
R1737	1-218-736-11	s	RESISTOR,CHIP 68K 1/16W(1608)
R1738	1-218-708-11	s	RESISTOR,CHIP 4.7K 1/16W(1608)
R1744	1-216-864-11	s	RESISTOR,CHIP 0 1/16W (1608)
R1745	1-216-864-11	s	RESISTOR,CHIP 0 1/16W (1608)
R1800	1-218-732-11	s	RESISTOR,CHIP 47K 1/16W(1608)
R1801	1-218-700-11	s	RESISTOR,CHIP 2.2K 1/16W(1608)
R1802	1-218-740-11	s	RESISTOR,CHIP 100K 1/16W(1608)
R1803	1-218-716-11	s	RESISTOR,CHIP 10K 1/16W(1608)
R1804	1-218-700-11	s	RESISTOR,CHIP 2.2K 1/16W(1608)
R1807	1-216-864-11	s	RESISTOR,CHIP 0 1/16W (1608)
R1813	1-218-700-11	s	RESISTOR,CHIP 2.2K 1/16W(1608)
R1814	1-218-692-11	s	RESISTOR,CHIP 1.0K 1/16W(1608)
R1815	1-218-700-11	s	RESISTOR,CHIP 2.2K 1/16W(1608)
R1816	1-218-660-91	s	RESISTOR,CHIP 47 1/16W (1608)
R1817	1-218-668-11	s	RESISTOR,CHIP 100 1/16W (1608)
R1818	1-218-700-11	s	RESISTOR,CHIP 2.2K 1/16W(1608)
R1819	1-218-708-11	s	RESISTOR,CHIP 4.7K 1/16W(1608)
R1820	1-218-732-11	s	RESISTOR,CHIP 47K 1/16W(1608)
R1821	1-218-716-11	s	RESISTOR,CHIP 10K 1/16W(1608)
R1822	1-216-864-11	s	CONDUCTOR, CHIP (1608)
R1824	1-218-684-11	s	RESISTOR,CHIP 470 1/16W (1608)
R1828	1-218-692-11	s	RESISTOR,CHIP 1.0K 1/16W(1608)
R1829 *N	1-218-732-11	s	RESISTOR,CHIP 47K 1/16W(1608)
R1830 *P	1-218-732-11	s	RESISTOR,CHIP 47K 1/16W(1608)
R1831	1-218-688-11	s	RESISTOR,CHIP 680 1/16W(1608)
R1832	1-218-688-11	s	RESISTOR,CHIP 680 1/16W(1608)
R1833	1-218-692-11	s	RESISTOR,CHIP 1.0K 1/16W(1608)
R1834	1-218-668-11	s	RESISTOR,CHIP 100 1/16W (1608)
R1835	1-218-692-11	s	RESISTOR,CHIP 1.0K 1/16W(1608)
R1836	1-218-676-11	s	RESISTOR,CHIP 220 1/16W(1608)
R1837 *N	1-216-864-11	s	RESISTOR,CHIP 0 1/16W (1608)
R1841	1-218-700-11	s	RESISTOR,CHIP 2.2K 1/16W(1608)
R1842	1-218-700-11	s	RESISTOR,CHIP 2.2K 1/16W(1608)

(DM-123/P BOARD [SUFFIX 14])

Ref. No. or Q'ty	Part No.	SP	Description
R1844	1-218-740-11	s	RESISTOR,CHIP 100K 1/16W(1608)
R1845	1-218-716-11	s	RESISTOR,CHIP 10K 1/16W(1608)
R1846	1-218-700-11	s	RESISTOR,CHIP 2.2K 1/16W(1608)
R1847	1-218-716-11	s	RESISTOR,CHIP 10K 1/16W(1608)
R1849	1-218-740-11	s	RESISTOR,CHIP 100K 1/16W(1608)
R1856	1-218-740-11	s	RESISTOR,CHIP 100K 1/16W(1608)
R1858	1-218-740-11	s	RESISTOR,CHIP 100K 1/16W(1608)
R1861	1-218-716-11	s	RESISTOR,CHIP 10K 1/16W(1608)
R1862	1-218-716-11	s	RESISTOR,CHIP 10K 1/16W(1608)
R1867	1-218-732-11	s	RESISTOR,CHIP 47K 1/16W(1608)
R1868	1-218-692-11	s	RESISTOR,CHIP 1.0K 1/16W(1608)
R1869	1-218-692-11	s	RESISTOR,CHIP 1.0K 1/16W(1608)
R1870	1-218-708-11	s	RESISTOR,CHIP 4.7K 1/16W(1608)
R1871	1-218-732-11	s	RESISTOR,CHIP 47K 1/16W(1608)
R1873	1-218-732-11	s	RESISTOR,CHIP 47K 1/16W(1608)
R1875	1-218-732-11	s	RESISTOR,CHIP 47K 1/16W(1608)
R1878	1-218-720-11	s	RESISTOR,CHIP 15K 1/16W(1608)
R1879	1-218-713-11	s	RESISTOR,METAL 7.5K 1/16W
R1881	1-218-720-11	s	RESISTOR,CHIP 15K 1/16W(1608)
R1882	1-218-700-11	s	RESISTOR,CHIP 2.2K 1/16W(1608)
R1883 *N	1-218-710-11	s	RESISTOR,CHIP 5.6K 1/16W(1608)
*P	1-218-706-11	s	RESISTOR,CHIP 3.9K 1/16W(1608)
R1884	1-218-700-11	s	RESISTOR,CHIP 2.2K 1/16W(1608)
R1885	1-218-700-11	s	RESISTOR,CHIP 2.2K 1/16W(1608)
R1886	1-218-660-91	s	RESISTOR,CHIP 47 1/16W (1608)
R1887	1-218-692-11	s	RESISTOR,CHIP 1.0K 1/16W(1608)
R1888	1-216-853-11	s	RESISTOR,CHIP 470K 1/16W(1608)
R1889	1-218-748-11	s	RESISTOR,CHIP 220K 1/16W(1608)
R1890	1-218-716-11	s	RESISTOR,CHIP 10K 1/16W(1608)
R1891	1-218-724-11	s	RESISTOR,CHIP 22K 1/16W(1608)
R1892	1-218-716-11	s	RESISTOR,CHIP 10K 1/16W(1608)
R1894	1-218-660-91	s	RESISTOR,CHIP 47 1/16W (1608)
R1896	1-218-716-11	s	RESISTOR,CHIP 10K 1/16W(1608)
R1897	1-218-668-11	s	RESISTOR,CHIP 100 1/16W (1608)
R1898	1-218-692-11	s	RESISTOR,CHIP 1.0K 1/16W(1608)
R1901	1-218-700-11	s	RESISTOR,CHIP 2.2K 1/16W(1608)
R1902	1-218-700-11	s	RESISTOR,CHIP 2.2K 1/16W(1608)
R1903	1-218-700-11	s	RESISTOR,CHIP 2.2K 1/16W(1608)
R1906	1-218-716-11	s	RESISTOR,CHIP 10K 1/16W(1608)
R1907	1-218-706-11	s	RESISTOR,CHIP 3.9K 1/16W(1608)
R1908	1-218-706-11	s	RESISTOR,CHIP 3.9K 1/16W(1608)
R1909	1-218-668-11	s	RESISTOR,CHIP 100 1/16W (1608)
R1910	1-218-706-11	s	RESISTOR,CHIP 3.9K 1/16W(1608)
R1911	1-218-692-11	s	RESISTOR,CHIP 1.0K 1/16W(1608)
R1912	1-218-692-11	s	RESISTOR,CHIP 1.0K 1/16W(1608)
R1913	1-218-723-11	s	RESISTOR,METAL 20K 1/16W
R1914	1-218-730-11	s	RESISTOR METAL FILM CHIP 39K
R1917	1-218-700-11	s	RESISTOR,CHIP 2.2K 1/16W(1608)
R1925	1-218-740-11	s	RESISTOR,CHIP 100K 1/16W(1608)
R1926	1-216-864-11	s	RESISTOR,CHIP 0 1/16W (1608)
R1928	1-218-732-11	s	RESISTOR,CHIP 47K 1/16W(1608)
R1931	1-218-732-11	s	RESISTOR,CHIP 47K 1/16W(1608)
R1933	1-216-864-11	s	CONDUCTOR, CHIP (1608)
RB901	1-239-412-11	s	NETWORK, RESISTOR 100 (1608)
RB902	1-236-907-11	s	RESISTOR BLOCK 100K (1608)
RB903	1-239-412-11	s	NETWORK, RESISTOR 100 (1608)
RB904	1-239-412-11	s	NETWORK, RESISTOR 100 (1608)
RB907	1-236-907-11	s	RESISTOR BLOCK 100K (1608)

(DM-123/P BOARD [SUFFIX 14])

Ref. No. or Q'ty	Part No.	SP	Description
RB908	1-236-907-11	s	RESISTOR BLOCK 100K (1608)
RB1301	1-239-412-11	s	NETWORK, RESISTOR 100 (1608)
RB1302	1-239-412-11	s	NETWORK, RESISTOR 100 (1608)
RB1501	1-239-412-11	s	NETWORK, RESISTOR 100 (1608)
RB1601	1-239-412-11	s	NETWORK, RESISTOR 100 (1608)
RB1801	1-239-416-11	s	NETWORK,RESISTOR 220 (1608)
RB1802	1-239-416-11	s	NETWORK,RESISTOR 220 (1608)
RB1803	1-239-426-11	s	NETWORK RESISTOR 2.2K (1608)
RB1804	1-236-907-11	s	RESISTOR BLOCK 100K (1608)
RB1805	1-239-412-11	s	NETWORK, RESISTOR 100 (1608)
RB1806	1-239-412-11	s	NETWORK, RESISTOR 100 (1608)
RV101	1-237-033-11	s	RESISTOR,ADJ,CERMET 1K
RV102	1-237-033-11	s	RESISTOR,ADJ,CERMET 1K
RV104	1-237-033-11	s	RESISTOR,ADJ,CERMET 1K
RV109 *N	1-237-032-11	s	RESISTOR,ADJ,CERMET 500
*P	1-237-031-11	s	RESISTOR,ADJ,CERMET 200
RV110	1-237-031-11	s	RESISTOR,ADJ,CERMET 200
RV111	1-237-034-11	s	RESISTOR,ADJ,CERMET 2K
RV112	1-237-034-11	s	RESISTOR,ADJ,CERMET 2K
RV113	1-237-037-11	s	RESISTOR,ADJ,CERMET 20K
RV301	1-237-033-11	s	RESISTOR,ADJ,CERMET 1K
RV302	1-237-033-11	s	RESISTOR,ADJ,CERMET 1K
RV303	1-237-033-11	s	RESISTOR,ADJ,CERMET 1K
RV304	1-237-033-11	s	RESISTOR,ADJ,CERMET 1K
RV309	1-237-031-11	s	RESISTOR,ADJ,CERMET 200
RV310	1-237-031-11	s	RESISTOR,ADJ,CERMET 200
RV311	1-237-034-11	s	RESISTOR,ADJ,CERMET 2K
RV312	1-237-034-11	s	RESISTOR,ADJ,CERMET 2K
RV313	1-237-037-11	s	RESISTOR,ADJ,CERMET 20K
RV503	1-241-261-41	s	RESISTOR, ADJ, CERMET 1K
RV504	1-241-261-41	s	RESISTOR, ADJ, CERMET 1K
RV506	1-241-264-11	s	RESISTOR ADJ 10K (CERMET)
RV703 *P	1-241-261-41	s	RESISTOR, ADJ, CERMET 1K
RV704	1-241-261-41	s	RESISTOR, ADJ, CERMET 1K
RV1301	1-241-262-11	s	RESISTOR ADJ 2K (CERMET)
RV1501	1-241-262-11	s	RESISTOR ADJ 2K (CERMET)
S1701	1-692-271-31	s	SWITCH, SLIDE
S1801	1-692-271-31	s	SWITCH, SLIDE
TP1502	1-535-877-22	o	CHIP,CHECKER (TEST POINT)
X301 *N	1-579-989-11	s	VIBRATOR, CERAMIC
*P	1-579-990-11	s	VIBRATOR, CERAMIC
X302 *N	1-579-986-21	s	VIBRATOR, CERAMIC
*P	1-579-988-11	s	VIBRATOR, CERAMIC
X901	1-579-843-11	s	OSCILLATOR, CRYSTAL

DM-123/P BOARD [SUFFIX 15-]

---

*N: [Lot No. 361 -] HDW-M2000, M2100, A2100
[Lot No. 462 -] HDW-S2000
[Lot No. 434 -] DVW-M2000
[Lot No. 361 -] MSW-M2000, A2000, M2100
[Lot No. 495 -] MSW-M2000E, M2100E
*P: [Lot No. 361 -] HDW-M2000P, M2100P
[Lot No. 462 -] HDW-S2000P
[Lot No. 434 -] DVW-M2000P
[Lot No. 361 -] MSW-M2000P, A2000P, M2100P
[Lot No. 495 -] MSW-M2000EP, M2100EP

*1: [Lot No. 361 -] [Board No. suffix 15 -]
*2: [Lot No. 421 -] [Board No. suffix 17 -]
*3: [Lot No. 451 -] [Board No. suffix 18 -]

Ref. No. or Q'ty	Part No.	SP	Description
1pc	*N A-8324-843-C	s	MOUNTED CIRCUIT BOARD, DM-123
	*P A-8324-916-C	o	MOUNTED CIRCUIT BOARD, DM-123P
6pcs	7-682-902-11	s	SCREW +PWH 2.6X5(EP-FE/ZN/CM2)
1pc	3-179-084-11	s	LEVER(R),PRINTED C.BOARD
1pc	3-179-085-11	s	LEVER(L),PRINTED C.BOARD
C101	1-164-315-11	s	CAPACITOR,CERAMIC 470PF/50V CH
C102	1-107-826-11	s	CAPACITOR,CHIP CERAMIC 0.1MF
C103	1-107-826-11	s	CAPACITOR,CHIP CERAMIC 0.1MF
C104	1-115-416-11	s	CAPACITOR,CERAMIC 1000PF/25V
C105	*N 1-162-918-11	s	CAPACITOR,CERAMIC 18PF/50V CH
C106	1-162-919-11	s	CAPACITOR,CERAMIC 22PF/50V CH
C107	1-107-826-11	s	CAPACITOR,CHIP CERAMIC 0.1MF
C108	1-162-919-11	s	CAPACITOR,CERAMIC 22PF/50V CH
C109	1-107-826-11	s	CAPACITOR,CHIP CERAMIC 0.1MF
C110	1-107-826-11	s	CAPACITOR,CHIP CERAMIC 0.1MF
C111	1-107-826-11	s	CAPACITOR,CHIP CERAMIC 0.1MF
C112	1-107-826-11	s	CAPACITOR,CHIP CERAMIC 0.1MF
C113	1-164-380-11	s	CAPACITOR,CERAMIC 51PF CH (M-)
C114	1-107-826-11	s	CAPACITOR,CHIP CERAMIC 0.1MF
C115	1-107-826-11	s	CAPACITOR,CHIP CERAMIC 0.1MF
C116	1-162-924-11	s	CAPACITOR,CERAMIC 56PF/50V CH
C117	1-164-315-11	s	CAPACITOR,CERAMIC 470PF/50V CH
C118	1-107-826-11	s	CAPACITOR,CHIP CERAMIC 0.1MF
C119	1-107-826-11	s	CAPACITOR,CHIP CERAMIC 0.1MF
C120	1-107-826-11	s	CAPACITOR,CHIP CERAMIC 0.1MF
C121	1-107-826-11	s	CAPACITOR,CHIP CERAMIC 0.1MF
C122	1-107-826-11	s	CAPACITOR,CHIP CERAMIC 0.1MF
C123	1-164-238-11	s	CAPACITOR,CERAMIC 36PF/50V CH
C124	*N 1-162-924-11	s	CAPACITOR,CERAMIC 56PF/50V CH
	*P 1-162-920-11	s	CAPACITOR,CERAMIC 27PF/50V CH
C125	1-107-826-11	s	CAPACITOR,CHIP CERAMIC 0.1MF
C126	1-162-925-11	s	CAPACITOR,CERAMIC 68PF/50V CH
C127	*N 1-162-928-11	s	CAPACITOR,CERAMIC 120PF/50V CH
	*P 1-162-926-11	s	CAPACITOR,CERAMIC 82PF/50V CH
C128	1-164-238-11	s	CAPACITOR,CERAMIC 36PF/50V CH
C129	*N 1-162-924-11	s	CAPACITOR,CERAMIC 56PF/50V CH
	*P 1-162-920-11	s	CAPACITOR,CERAMIC 27PF/50V CH
C130	1-107-826-11	s	CAPACITOR,CHIP CERAMIC 0.1MF
C131	1-107-826-11	s	CAPACITOR,CHIP CERAMIC 0.1MF
C132	1-107-826-11	s	CAPACITOR,CHIP CERAMIC 0.1MF
C133	1-107-826-11	s	CAPACITOR,CHIP CERAMIC 0.1MF
C134	1-107-826-11	s	CAPACITOR,CHIP CERAMIC 0.1MF
C135	1-162-923-11	s	CAPACITOR,CERAMIC 47PF/50V CH
C136	1-164-380-11	s	CAPACITOR,CERAMIC 51PF CH (M-)
C137	1-162-928-11	s	CAPACITOR,CERAMIC 120PF/50V CH
C138	1-164-813-11	s	CAPACITOR,CERAMIC 15PF/50V CH
C139	1-107-826-11	s	CAPACITOR,CHIP CERAMIC 0.1MF
C140	1-107-826-11	s	CAPACITOR,CHIP CERAMIC 0.1MF

(DM-123/P BOARD [SUFFIX 15-])

Ref. No. or Q'ty	Part No.	SP	Description
C141	1-107-826-11	s	CAPACITOR,CHIP CERAMIC 0.1MF
C142	1-107-826-11	s	CAPACITOR,CHIP CERAMIC 0.1MF
C143	1-162-913-11	s	CAPACITOR,CHIP CERAMIC 8PF/50V
C144	1-117-755-91	s	CAP, CERAMIC 43PF CH (1608)
C145	1-107-826-11	s	CAPACITOR,CHIP CERAMIC 0.1MF
C146	1-107-826-11	s	CAPACITOR,CHIP CERAMIC 0.1MF
C147	1-107-826-11	s	CAPACITOR,CHIP CERAMIC 0.1MF
C148	1-107-826-11	s	CAPACITOR,CHIP CERAMIC 0.1MF
C149	1-107-826-11	s	CAPACITOR,CHIP CERAMIC 0.1MF
C150	1-126-391-11	s	CAPACITOR ELECT 47MF/6.3V(105)
C151	1-107-826-11	s	CAPACITOR,CHIP CERAMIC 0.1MF
C152	1-107-826-11	s	CAPACITOR,CHIP CERAMIC 0.1MF
C153	1-107-826-11	s	CAPACITOR,CHIP CERAMIC 0.1MF
C154	1-126-391-11	s	CAPACITOR ELECT 47MF/6.3V(105)
C155	1-107-826-11	s	CAPACITOR,CHIP CERAMIC 0.1MF
C156	1-107-826-11	s	CAPACITOR,CHIP CERAMIC 0.1MF
C157	1-107-826-11	s	CAPACITOR,CHIP CERAMIC 0.1MF
C158	1-107-826-11	s	CAPACITOR,CHIP CERAMIC 0.1MF
C159	1-107-826-11	s	CAPACITOR,CHIP CERAMIC 0.1MF
C160	1-164-315-11	s	CAPACITOR,CERAMIC 470PF/50V CH
C161	1-126-391-11	s	CAPACITOR ELECT 47MF/6.3V(105)
C162	1-164-315-11	s	CAPACITOR,CERAMIC 470PF/50V CH
C163	1-107-826-11	s	CAPACITOR,CHIP CERAMIC 0.1MF
C164	1-107-826-11	s	CAPACITOR,CHIP CERAMIC 0.1MF
C165	1-107-826-11	s	CAPACITOR,CHIP CERAMIC 0.1MF
C166	1-107-826-11	s	CAPACITOR,CHIP CERAMIC 0.1MF
C167	1-107-826-11	s	CAPACITOR,CHIP CERAMIC 0.1MF
C168	*N 1-164-383-11	s	CAPACITOR,CERAMIC 110PF/50V CH
	*P 1-162-926-11	s	CAPACITOR,CERAMIC 82PF/50V CH
C169	*N 1-164-384-11	s	CAPACITOR CERAMIC 130PF/50V CH
	*P 1-164-217-11	s	CAPACITOR,CERAMIC 150PF/50V CH
C170	1-107-826-11	s	CAPACITOR,CHIP CERAMIC 0.1MF
C171	1-107-826-11	s	CAPACITOR,CHIP CERAMIC 0.1MF
C172	1-107-826-11	s	CAPACITOR,CHIP CERAMIC 0.1MF
C173	1-107-826-11	s	CAPACITOR,CHIP CERAMIC 0.1MF
C174	1-107-826-11	s	CAPACITOR,CHIP CERAMIC 0.1MF
C175	1-107-826-11	s	CAPACITOR,CHIP CERAMIC 0.1MF
C176	1-107-826-11	s	CAPACITOR,CHIP CERAMIC 0.1MF
C177	1-107-826-11	s	CAPACITOR,CHIP CERAMIC 0.1MF
C178	1-107-826-11	s	CAPACITOR,CHIP CERAMIC 0.1MF
C179	1-126-391-11	s	CAPACITOR ELECT 47MF/6.3V(105)
C180	1-107-826-11	s	CAPACITOR,CHIP CERAMIC 0.1MF
C181	1-107-826-11	s	CAPACITOR,CHIP CERAMIC 0.1MF
C182	1-162-910-11	s	CAPACITOR,CERAMIC 5PF/50V 1608
C183	1-162-910-11	s	CAPACITOR,CERAMIC 5PF/50V 1608
C184	1-126-391-11	s	CAPACITOR ELECT 47MF/6.3V(105)
C185	*2 1-100-352-91	s	CAP, CHIP CERAMIC 1MF B (1608)
	*1 1-127-573-11	s	CAPACITOR,CERAMIC 1MFB(2012)
C186	*2 1-100-352-91	s	CAP, CHIP CERAMIC 1MF B (1608)
	*1 1-127-573-11	s	CAPACITOR,CERAMIC 1MFB(2012)
C187	1-107-826-11	s	CAPACITOR,CHIP CERAMIC 0.1MF
C188	1-107-826-11	s	CAPACITOR,CHIP CERAMIC 0.1MF
C189	1-107-826-11	s	CAPACITOR,CHIP CERAMIC 0.1MF
C190	1-115-416-11	s	CAPACITOR,CERAMIC 1000PF/25V
C191	1-126-391-11	s	CAPACITOR ELECT 47MF/6.3V(105)
C192	1-107-826-11	s	CAPACITOR,CHIP CERAMIC 0.1MF
C193	1-162-913-11	s	CAPACITOR,CHIP CERAMIC 8PF/50V
C194	1-107-826-11	s	CAPACITOR,CHIP CERAMIC 0.1MF
C195	1-162-919-11	s	CAPACITOR,CERAMIC 22PF/50V CH

(DM-123/P BOARD [SUFFIX 15-])

Ref. No. or Q'ty	Part No.	SP	Description
C196 *2	1-100-352-91	s	CAP, CHIP CERAMIC 1MF B (1608)
*1	1-127-573-11	s	CAPACITOR,CERAMIC 1MFB(2012)
C197	1-107-826-11	s	CAPACITOR,CHIP CERAMIC 0.1MF
C198	1-162-959-11	s	CAPACITOR,CERAMIC 330PF/50V SL
C199	1-107-826-11	s	CAPACITOR,CHIP CERAMIC 0.1MF
C200	1-162-919-11	s	CAPACITOR,CERAMIC 22PF/50V CH
C201	1-107-826-11	s	CAPACITOR,CHIP CERAMIC 0.1MF
C202	1-162-919-11	s	CAPACITOR,CERAMIC 22PF/50V CH
C203	1-107-826-11	s	CAPACITOR,CHIP CERAMIC 0.1MF
C204	1-107-826-11	s	CAPACITOR,CHIP CERAMIC 0.1MF
C205	1-164-388-91	s	CAPACITOR,CERAMIC 270PF/50V CH
C206	1-164-384-11	s	CAPACITOR CERAMIC 130PF/50V CH
C207	1-164-388-91	s	CAPACITOR,CERAMIC 270PF/50V CH
C208	1-162-927-11	s	CAPACITOR,CERAMIC 100PF/50V CH
C209	1-162-920-11	s	CAPACITOR,CERAMIC 27PF/50V CH
C211	1-162-923-11	s	CAPACITOR,CERAMIC 47PF/50V CH
C212	1-162-923-11	s	CAPACITOR,CERAMIC 47PF/50V CH
C213	1-162-923-11	s	CAPACITOR,CERAMIC 47PF/50V CH
C214	1-107-826-11	s	CAPACITOR,CHIP CERAMIC 0.1MF
C215	1-107-826-11	s	CAPACITOR,CHIP CERAMIC 0.1MF
C216	1-107-826-11	s	CAPACITOR,CHIP CERAMIC 0.1MF
C217	1-162-923-11	s	CAPACITOR,CERAMIC 47PF/50V CH
C301	1-107-826-11	s	CAPACITOR,CHIP CERAMIC 0.1MF
C302	1-107-826-11	s	CAPACITOR,CHIP CERAMIC 0.1MF
C303	1-164-315-11	s	CAPACITOR,CERAMIC 470PF/50V CH
C304	1-162-919-11	s	CAPACITOR,CERAMIC 22PF/50V CH
C305	1-162-921-11	s	CAPACITOR,CERAMIC 33PF/50V CH
C306	1-162-919-11	s	CAPACITOR,CERAMIC 22PF/50V CH
C307	1-162-921-11	s	CAPACITOR,CERAMIC 33PF/50V CH
C308	1-115-416-11	s	CAPACITOR,CERAMIC 1000PF/25V
C309	1-162-918-11	s	CAPACITOR,CERAMIC 18PF/50V CH
C310	1-126-391-11	s	CAPACITOR ELECT 47MF/6.3V(105)
C311	1-107-826-11	s	CAPACITOR,CHIP CERAMIC 0.1MF
C312	1-107-826-11	s	CAPACITOR,CHIP CERAMIC 0.1MF
C313	1-107-826-11	s	CAPACITOR,CHIP CERAMIC 0.1MF
C314	1-164-315-11	s	CAPACITOR,CERAMIC 470PF/50V CH
C315	1-107-826-11	s	CAPACITOR,CHIP CERAMIC 0.1MF
C316	1-107-826-11	s	CAPACITOR,CHIP CERAMIC 0.1MF
C317	1-162-922-11	s	CAPACITOR,CERAMIC 39PF/50V CH
C318	1-164-380-11	s	CAPACITOR,CERAMIC 51PF CH (M-)
C319	1-107-826-11	s	CAPACITOR,CHIP CERAMIC 0.1MF
C320	1-162-926-11	s	CAPACITOR,CERAMIC 82PF/50V CH
C321	1-162-927-11	s	CAPACITOR,CERAMIC 100PF/50V CH
C322	1-126-391-11	s	CAPACITOR ELECT 47MF/6.3V(105)
C323	1-162-922-11	s	CAPACITOR,CERAMIC 39PF/50V CH
C324	1-164-380-11	s	CAPACITOR,CERAMIC 51PF CH (M-)
C325	1-107-826-11	s	CAPACITOR,CHIP CERAMIC 0.1MF
C326	1-164-217-11	s	CAPACITOR,CERAMIC 150PF/50V CH
C327	1-162-910-11	s	CAPACITOR,CERAMIC 5PF/50V 1608
C328	1-164-315-11	s	CAPACITOR,CERAMIC 470PF/50V CH
C329	1-107-826-11	s	CAPACITOR,CHIP CERAMIC 0.1MF
C330	1-107-826-11	s	CAPACITOR,CHIP CERAMIC 0.1MF
C331	1-107-826-11	s	CAPACITOR,CHIP CERAMIC 0.1MF
C332	1-107-826-11	s	CAPACITOR,CHIP CERAMIC 0.1MF
C333 *N	1-164-382-11	s	CAPACITOR,CHIP CERAMIC 91PF/50
*P	1-162-927-11	s	CAPACITOR,CERAMIC 100PF/50V CH
C334	1-164-380-11	s	CAPACITOR,CERAMIC 51PF CH (M-)
C335	1-107-826-11	s	CAPACITOR,CHIP CERAMIC 0.1MF
C336	1-107-826-11	s	CAPACITOR,CHIP CERAMIC 0.1MF

(DM-123/P BOARD [SUFFIX 15-])

Ref. No. or Q'ty	Part No.	SP	Description
C337	1-107-826-11	s	CAPACITOR,CHIP CERAMIC 0.1MF
C338	1-107-826-11	s	CAPACITOR,CHIP CERAMIC 0.1MF
C339	1-126-391-11	s	CAPACITOR ELECT 47MF/6.3V(105)
C340	1-164-160-11	s	CAPACITOR,CERAMIC 20PF/50V CH
C341	1-164-380-11	s	CAPACITOR,CERAMIC 51PF CH (M-)
C342	1-107-826-11	s	CAPACITOR,CHIP CERAMIC 0.1MF
C343	1-107-826-11	s	CAPACITOR,CHIP CERAMIC 0.1MF
C344	1-107-826-11	s	CAPACITOR,CHIP CERAMIC 0.1MF
C345	1-107-826-11	s	CAPACITOR,CHIP CERAMIC 0.1MF
C346	1-107-826-11	s	CAPACITOR,CHIP CERAMIC 0.1MF
C347	1-126-391-11	s	CAPACITOR ELECT 47MF/6.3V(105)
C348	1-107-826-11	s	CAPACITOR,CHIP CERAMIC 0.1MF
C349	1-107-826-11	s	CAPACITOR,CHIP CERAMIC 0.1MF
C350	1-107-826-11	s	CAPACITOR,CHIP CERAMIC 0.1MF
C351	1-107-826-11	s	CAPACITOR,CHIP CERAMIC 0.1MF
C352	1-164-315-11	s	CAPACITOR,CERAMIC 470PF/50V CH
C353	1-164-315-11	s	CAPACITOR,CERAMIC 470PF/50V CH
C354	1-107-826-11	s	CAPACITOR,CHIP CERAMIC 0.1MF
C355	1-107-826-11	s	CAPACITOR,CHIP CERAMIC 0.1MF
C356	1-107-826-11	s	CAPACITOR,CHIP CERAMIC 0.1MF
C357	1-107-826-11	s	CAPACITOR,CHIP CERAMIC 0.1MF
C358	1-162-927-11	s	CAPACITOR,CERAMIC 100PF/50V CH
C359	1-164-217-11	s	CAPACITOR,CERAMIC 150PF/50V CH
C360	1-107-826-11	s	CAPACITOR,CHIP CERAMIC 0.1MF
C361	1-107-826-11	s	CAPACITOR,CHIP CERAMIC 0.1MF
C362	1-107-826-11	s	CAPACITOR,CHIP CERAMIC 0.1MF
C363	1-107-826-11	s	CAPACITOR,CHIP CERAMIC 0.1MF
C364	1-107-826-11	s	CAPACITOR,CHIP CERAMIC 0.1MF
C365	1-107-826-11	s	CAPACITOR,CHIP CERAMIC 0.1MF
C366	1-107-826-11	s	CAPACITOR,CHIP CERAMIC 0.1MF
C367	1-107-826-11	s	CAPACITOR,CHIP CERAMIC 0.1MF
C368	1-107-826-11	s	CAPACITOR,CHIP CERAMIC 0.1MF
C369	1-162-913-11	s	CAPACITOR,CHIP CERAMIC 8PF/50V
C370	1-126-391-11	s	CAPACITOR ELECT 47MF/6.3V(105)
C371	1-162-913-11	s	CAPACITOR,CHIP CERAMIC 8PF/50V
C372	1-126-391-11	s	CAPACITOR ELECT 47MF/6.3V(105)
C373	1-107-826-11	s	CAPACITOR,CHIP CERAMIC 0.1MF
C374	1-107-826-11	s	CAPACITOR,CHIP CERAMIC 0.1MF
C375	1-107-826-11	s	CAPACITOR,CHIP CERAMIC 0.1MF
C376	1-107-826-11	s	CAPACITOR,CHIP CERAMIC 0.1MF
C377 *2	1-100-352-91	s	CAP, CHIP CERAMIC 1MF B (1608)
*1	1-127-573-11	s	CAPACITOR,CERAMIC 1MFB(2012)
C378 *2	1-100-352-91	s	CAP, CHIP CERAMIC 1MF B (1608)
*1	1-127-573-11	s	CAPACITOR,CERAMIC 1MFB(2012)
C379	1-115-416-11	s	CAPACITOR,CERAMIC 1000PF/25V
C380	1-162-913-11	s	CAPACITOR,CHIP CERAMIC 8PF/50V
C381	1-126-391-11	s	CAPACITOR ELECT 47MF/6.3V(105)
C382	1-107-826-11	s	CAPACITOR,CHIP CERAMIC 0.1MF
C383	1-162-919-11	s	CAPACITOR,CERAMIC 22PF/50V CH
C384	1-107-826-11	s	CAPACITOR,CHIP CERAMIC 0.1MF
C385 *2	1-100-352-91	s	CAP, CHIP CERAMIC 1MF B (1608)
*1	1-127-573-11	s	CAPACITOR,CERAMIC 1MFB(2012)
C386	1-162-959-11	s	CAPACITOR,CERAMIC 330PF/50V SL
C387	1-162-919-11	s	CAPACITOR,CERAMIC 22PF/50V CH
C388	1-107-826-11	s	CAPACITOR,CHIP CERAMIC 0.1MF
C389	1-107-826-11	s	CAPACITOR,CHIP CERAMIC 0.1MF
C390	1-107-826-11	s	CAPACITOR,CHIP CERAMIC 0.1MF
C391	1-162-909-11	s	CAPACITOR,CERAMIC 4PF/50V CH
C392	1-162-915-11	s	CAPACITOR,CERAMIC 10PF/50V CH

(DM-123/P BOARD [SUFFIX 15-])

Ref. No. or Q'ty	Part No.	SP	Description
C502	*2 1-100-352-91	s	CAP, CHIP CERAMIC 1MF B (1608)
	*1 1-127-573-11	s	CAPACITOR,CERAMIC 1MFB(2012)
C503	1-107-826-11	s	CAPACITOR,CHIP CERAMIC 0.1MF
C504	1-126-391-11	s	CAPACITOR ELECT 47MF/6.3V(105)
C505	1-107-826-11	s	CAPACITOR,CHIP CERAMIC 0.1MF
C506	1-107-826-11	s	CAPACITOR,CHIP CERAMIC 0.1MF
C507	1-107-826-11	s	CAPACITOR,CHIP CERAMIC 0.1MF
C508	1-107-826-11	s	CAPACITOR,CHIP CERAMIC 0.1MF
C509	1-107-826-11	s	CAPACITOR,CHIP CERAMIC 0.1MF
C510	1-107-826-11	s	CAPACITOR,CHIP CERAMIC 0.1MF
C511	1-107-826-11	s	CAPACITOR,CHIP CERAMIC 0.1MF
C512	1-107-826-11	s	CAPACITOR,CHIP CERAMIC 0.1MF
C513	1-107-826-11	s	CAPACITOR,CHIP CERAMIC 0.1MF
C514	*3 1-100-421-21	s	CAP, ELECT 220MF (6.3X5.9)
	*1 1-131-999-11	s	CAPACITOR,SOLID ELECT 150MF
C515	1-164-227-11	s	CAPACITOR,CERAMIC 0.022MF/25V
C516	1-107-826-11	s	CAPACITOR,CHIP CERAMIC 0.1MF
C517	1-107-826-11	s	CAPACITOR,CHIP CERAMIC 0.1MF
C518	*2 1-165-989-11	s	CAPACITOR, CERAMIC 10MF (2012)
	*1 1-127-692-11	s	CAP, CHIP CERAMIC 10MF B 3216
C519	1-126-391-11	s	CAPACITOR ELECT 47MF/6.3V(105)
C520	1-131-661-11	s	CAPACITOR,ELECT 100MF/10V CHIP
C521	1-104-922-21	s	CAPACITOR,MINITURE MOLDMICA
C522	1-107-826-11	s	CAPACITOR,CHIP CERAMIC 0.1MF
C523	1-131-661-11	s	CAPACITOR,ELECT 100MF/10V CHIP
C524	1-126-391-11	s	CAPACITOR ELECT 47MF/6.3V(105)
C525	*2 1-127-760-11	s	CAPACITOR,CERAMIC 4.7MF/6.3V
	*1 1-127-820-11	s	CAPACITOR, SQUARE CHIP 4.7MF
C526	1-162-908-11	s	CAPACITOR,CERAMIC 3PF/50V 1608
C527	1-162-909-11	s	CAPACITOR,CERAMIC 4PF/50V CH
C528	1-162-909-11	s	CAPACITOR,CERAMIC 4PF/50V CH
C529	1-164-238-11	s	CAPACITOR,CERAMIC 36PF/50V CH
C530	1-117-755-91	s	CAP, CERAMIC 43PF CH (1608)
C532	1-107-826-11	s	CAPACITOR,CHIP CERAMIC 0.1MF
C533	1-100-159-91	s	CAP, CERAMIC 22MF B (SMD) 3216
C534	*2 1-100-743-91	s	CAPACITOR,CERAMIC2.2MF B(2012)
	*1 1-125-889-11	s	CAPACITOR, CERAMIC 2.2MF
C535	*P 1-107-826-11	s	CAPACITOR,CHIP CERAMIC 0.1MF
C536	*P 1-107-826-11	s	CAPACITOR,CHIP CERAMIC 0.1MF
C537	1-107-826-11	s	CAPACITOR,CHIP CERAMIC 0.1MF
C538	*3 1-100-421-21	s	CAP, ELECT 220MF (6.3X5.9)
	*1 1-131-999-11	s	CAPACITOR,SOLID ELECT 150MF
C539	1-100-159-91	s	CAP, CERAMIC 22MF B (SMD) 3216
C540	1-107-826-11	s	CAPACITOR,CHIP CERAMIC 0.1MF
C541	*3 1-100-880-91	s	CAPACITOR CERAMIC100MF C(3225)
C543	1-107-826-11	s	CAPACITOR,CHIP CERAMIC 0.1MF
C546	*P 1-107-826-11	s	CAPACITOR,CHIP CERAMIC 0.1MF
C547	*P 1-107-826-11	s	CAPACITOR,CHIP CERAMIC 0.1MF
C548	*P 1-107-826-11	s	CAPACITOR,CHIP CERAMIC 0.1MF
C549	*P 1-107-826-11	s	CAPACITOR,CHIP CERAMIC 0.1MF
C550	1-107-826-11	s	CAPACITOR,CHIP CERAMIC 0.1MF
C551	1-107-826-11	s	CAPACITOR,CHIP CERAMIC 0.1MF
C552	1-107-826-11	s	CAPACITOR,CHIP CERAMIC 0.1MF
C553	1-107-826-11	s	CAPACITOR,CHIP CERAMIC 0.1MF
C554	1-107-826-11	s	CAPACITOR,CHIP CERAMIC 0.1MF
C555	1-107-826-11	s	CAPACITOR,CHIP CERAMIC 0.1MF
C556	1-107-826-11	s	CAPACITOR,CHIP CERAMIC 0.1MF
C557	1-131-661-11	s	CAPACITOR,ELECT 100MF/10V CHIP
C558	1-107-826-11	s	CAPACITOR,CHIP CERAMIC 0.1MF
C559	1-162-916-11	s	CAPACITOR,CERAMIC 12PF/50V CH

(DM-123/P BOARD [SUFFIX 15-])

Ref. No. or Q'ty	Part No.	SP	Description
C562	*3 1-100-421-21	s	CAP, ELECT 220MF (6.3X5.9)
	*1 1-131-999-11	s	CAPACITOR,SOLID ELECT 150MF
C563	*3 1-100-421-21	s	CAP, ELECT 220MF (6.3X5.9)
	*1 1-131-999-11	s	CAPACITOR,SOLID ELECT 150MF
C565	1-107-826-11	s	CAPACITOR,CHIP CERAMIC 0.1MF
C567	*N 1-162-921-11	s	CAPACITOR,CERAMIC 33PF/50V CH
	*P 1-162-927-11	s	CAPACITOR,CERAMIC 100PF/50V CH
C568	1-107-826-11	s	CAPACITOR,CHIP CERAMIC 0.1MF
C570	1-107-826-11	s	CAPACITOR,CHIP CERAMIC 0.1MF
C701	1-107-826-11	s	CAPACITOR,CHIP CERAMIC 0.1MF
C702	1-107-826-11	s	CAPACITOR,CHIP CERAMIC 0.1MF
C704	1-164-227-11	s	CAPACITOR,CERAMIC 0.022MF/25V
C705	1-107-826-11	s	CAPACITOR,CHIP CERAMIC 0.1MF
C706	1-126-391-11	s	CAPACITOR ELECT 47MF/6.3V(105)
C707	1-131-661-11	s	CAPACITOR,ELECT 100MF/10V CHIP
C708	1-104-922-21	s	CAPACITOR,MINITURE MOLDMICA
C709	*2 1-127-760-11	s	CAPACITOR,CERAMIC 4.7MF/6.3V
	*1 1-127-820-11	s	CAPACITOR, SQUARE CHIP 4.7MF
C710	1-126-391-11	s	CAPACITOR ELECT 47MF/6.3V(105)
C711	1-107-826-11	s	CAPACITOR,CHIP CERAMIC 0.1MF
C712	1-131-661-11	s	CAPACITOR,ELECT 100MF/10V CHIP
C713	1-107-826-11	s	CAPACITOR,CHIP CERAMIC 0.1MF
C714	1-107-826-11	s	CAPACITOR,CHIP CERAMIC 0.1MF
C715	1-162-927-11	s	CAPACITOR,CERAMIC 100PF/50V CH
C716	1-131-998-11	s	CAP, SOLID ELECT 82MF 6.3 V
C717	1-107-826-11	s	CAPACITOR,CHIP CERAMIC 0.1MF
C718	1-100-159-91	s	CAP, CERAMIC 22MF B (SMD) 3216
C719	*2 1-100-743-91	s	CAPACITOR,CERAMIC2.2MF B(2012)
	*1 1-125-889-11	s	CAPACITOR, CERAMIC 2.2MF
C720	1-107-826-11	s	CAPACITOR,CHIP CERAMIC 0.1MF
C721	1-131-998-11	s	CAP, SOLID ELECT 82MF 6.3 V
C722	*2 1-100-352-91	s	CAP, CHIP CERAMIC 1MF B (1608)
	*1 1-127-573-11	s	CAPACITOR,CERAMIC 1MFB(2012)
C723	1-107-826-11	s	CAPACITOR,CHIP CERAMIC 0.1MF
C724	1-107-826-11	s	CAPACITOR,CHIP CERAMIC 0.1MF
C725	1-107-826-11	s	CAPACITOR,CHIP CERAMIC 0.1MF
C726	1-107-826-11	s	CAPACITOR,CHIP CERAMIC 0.1MF
C727	1-107-826-11	s	CAPACITOR,CHIP CERAMIC 0.1MF
C728	1-107-826-11	s	CAPACITOR,CHIP CERAMIC 0.1MF
C729	1-107-826-11	s	CAPACITOR,CHIP CERAMIC 0.1MF
C730	1-107-826-11	s	CAPACITOR,CHIP CERAMIC 0.1MF
C731	1-107-826-11	s	CAPACITOR,CHIP CERAMIC 0.1MF
C732	1-107-826-11	s	CAPACITOR,CHIP CERAMIC 0.1MF
C733	1-107-826-11	s	CAPACITOR,CHIP CERAMIC 0.1MF
C734	1-131-661-11	s	CAPACITOR,ELECT 100MF/10V CHIP
C735	1-107-826-11	s	CAPACITOR,CHIP CERAMIC 0.1MF
C736	1-162-916-11	s	CAPACITOR,CERAMIC 12PF/50V CH
C737	1-126-391-11	s	CAPACITOR ELECT 47MF/6.3V(105)
C738	1-107-826-11	s	CAPACITOR,CHIP CERAMIC 0.1MF
C739	1-131-998-11	s	CAP, SOLID ELECT 82MF 6.3 V
C740	1-131-998-11	s	CAP, SOLID ELECT 82MF 6.3 V
C742	*3 1-100-880-91	s	CAPACITOR CERAMIC100MF C(3225)
C744	1-162-908-11	s	CAPACITOR,CERAMIC 3PF/50V 1608
C901	1-162-919-11	s	CAPACITOR,CERAMIC 22PF/50V CH
C902	1-107-826-11	s	CAPACITOR,CHIP CERAMIC 0.1MF
C903	1-126-391-11	s	CAPACITOR ELECT 47MF/6.3V(105)
C904	1-107-826-11	s	CAPACITOR,CHIP CERAMIC 0.1MF
C905	1-107-826-11	s	CAPACITOR,CHIP CERAMIC 0.1MF
C906	1-107-826-11	s	CAPACITOR,CHIP CERAMIC 0.1MF
C907	1-107-826-11	s	CAPACITOR,CHIP CERAMIC 0.1MF

(DM-123/P BOARD [SUFFIX 15-])

Ref. No. or Q'ty	Part No.	SP	Description
C908	1-107-826-11	s	CAPACITOR,CHIP CERAMIC 0.1MF
C909	1-162-919-11	s	CAPACITOR,CERAMIC 22PF/50V CH
C910	1-162-919-11	s	CAPACITOR,CERAMIC 22PF/50V CH
C911	1-126-391-11	s	CAPACITOR ELECT 47MF/6.3V(105)
C912	1-126-391-11	s	CAPACITOR ELECT 47MF/6.3V(105)
C913	1-107-826-11	s	CAPACITOR,CHIP CERAMIC 0.1MF
C914	1-107-826-11	s	CAPACITOR,CHIP CERAMIC 0.1MF
C915	1-107-826-11	s	CAPACITOR,CHIP CERAMIC 0.1MF
C916	1-107-826-11	s	CAPACITOR,CHIP CERAMIC 0.1MF
C917	1-164-227-11	s	CAPACITOR,CERAMIC 0.022MF/25V
C918	1-164-227-11	s	CAPACITOR,CERAMIC 0.022MF/25V
C919	1-107-826-11	s	CAPACITOR,CHIP CERAMIC 0.1MF
C920	1-164-315-11	s	CAPACITOR,CERAMIC 470PF/50V CH
C921 *3	1-100-352-91	s	CAP, CHIP CERAMIC 1MF B (1608)
*1	1-107-826-11	s	CAPACITOR,CHIP CERAMIC 0.1MF
C922 *3	1-100-159-91	s	CAP, CERAMIC 22MF B (SMD) 3216
*1	1-107-826-11	s	CAPACITOR,CHIP CERAMIC 0.1MF
C923 *3	1-100-159-91	s	CAP, CERAMIC 22MF B (SMD) 3216
*1	1-107-826-11	s	CAPACITOR,CHIP CERAMIC 0.1MF
C924	1-107-826-11	s	CAPACITOR,CHIP CERAMIC 0.1MF
C925	1-162-919-11	s	CAPACITOR,CERAMIC 22PF/50V CH
C926	1-107-826-11	s	CAPACITOR,CHIP CERAMIC 0.1MF
C927	1-131-661-11	s	CAPACITOR,ELECT 100MF/10V CHIP
C928	1-131-661-11	s	CAPACITOR,ELECT 100MF/10V CHIP
C929 *3	deleted		
*1	1-131-661-11	s	CAPACITOR,ELECT 100MF/10V CHIP
C930	1-107-826-11	s	CAPACITOR,CHIP CERAMIC 0.1MF
C931	1-107-826-11	s	CAPACITOR,CHIP CERAMIC 0.1MF
C932	1-107-826-11	s	CAPACITOR,CHIP CERAMIC 0.1MF
C933	1-126-391-11	s	CAPACITOR ELECT 47MF/6.3V(105)
C934	1-107-826-11	s	CAPACITOR,CHIP CERAMIC 0.1MF
C935	1-107-826-11	s	CAPACITOR,CHIP CERAMIC 0.1MF
C936	1-107-826-11	s	CAPACITOR,CHIP CERAMIC 0.1MF
C937 *3	1-100-352-91	s	CAP, CHIP CERAMIC 1MF B (1608)
*1	1-107-826-11	s	CAPACITOR,CHIP CERAMIC 0.1MF
C938	1-107-826-11	s	CAPACITOR,CHIP CERAMIC 0.1MF
C939 *3	1-100-352-91	s	CAP, CHIP CERAMIC 1MF B (1608)
*1	1-107-826-11	s	CAPACITOR,CHIP CERAMIC 0.1MF
C940	1-107-826-11	s	CAPACITOR,CHIP CERAMIC 0.1MF
C941	1-126-391-11	s	CAPACITOR ELECT 47MF/6.3V(105)
C942	1-107-826-11	s	CAPACITOR,CHIP CERAMIC 0.1MF
C943	1-126-391-11	s	CAPACITOR ELECT 47MF/6.3V(105)
C944	1-107-826-11	s	CAPACITOR,CHIP CERAMIC 0.1MF
C945	1-126-391-11	s	CAPACITOR ELECT 47MF/6.3V(105)
C946	1-107-826-11	s	CAPACITOR,CHIP CERAMIC 0.1MF
C947	1-126-391-11	s	CAPACITOR ELECT 47MF/6.3V(105)
C949	1-107-826-11	s	CAPACITOR,CHIP CERAMIC 0.1MF
C950	1-107-826-11	s	CAPACITOR,CHIP CERAMIC 0.1MF
C951	1-107-826-11	s	CAPACITOR,CHIP CERAMIC 0.1MF
C952	1-107-826-11	s	CAPACITOR,CHIP CERAMIC 0.1MF
C953	1-107-826-11	s	CAPACITOR,CHIP CERAMIC 0.1MF
C961	1-107-826-11	s	CAPACITOR,CHIP CERAMIC 0.1MF
C962	1-107-826-11	s	CAPACITOR,CHIP CERAMIC 0.1MF
C963 *2	1-100-743-91	s	CAPACITOR,CERAMIC2.2MF B(2012)
*1	1-125-889-11	s	CAPACITOR, CERAMIC 2.2MF
C964	1-162-923-11	s	CAPACITOR,CERAMIC 47PF/50V CH
C965	1-162-923-11	s	CAPACITOR,CERAMIC 47PF/50V CH
C966	1-107-826-11	s	CAPACITOR,CHIP CERAMIC 0.1MF
C967	1-162-970-11	s	CAPACITOR CERAMIC 0.01MF/25V B
C968	1-107-826-11	s	CAPACITOR,CHIP CERAMIC 0.1MF

(DM-123/P BOARD [SUFFIX 15-])

Ref. No. or Q'ty	Part No.	SP	Description
C969 *2	1-165-989-11	s	CAPACITOR, CERAMIC 10MF (2012)
*1	1-127-692-11	s	CAP, CHIP CERAMIC 10MF B 3216
C970	1-107-826-11	s	CAPACITOR,CHIP CERAMIC 0.1MF
C971	1-107-826-11	s	CAPACITOR,CHIP CERAMIC 0.1MF
C972	1-107-826-11	s	CAPACITOR,CHIP CERAMIC 0.1MF
C973	1-135-343-11	s	CAPACITOR,SOLID ELECT 120MF
C974	1-107-826-11	s	CAPACITOR,CHIP CERAMIC 0.1MF
C975 *3	1-100-352-91	s	CAP, CHIP CERAMIC 1MF B (1608)
*1	1-107-826-11	s	CAPACITOR,CHIP CERAMIC 0.1MF
C976 *3	1-100-352-91	s	CAP, CHIP CERAMIC 1MF B (1608)
*1	1-107-826-11	s	CAPACITOR,CHIP CERAMIC 0.1MF
C977	1-107-826-11	s	CAPACITOR,CHIP CERAMIC 0.1MF
C978	1-107-826-11	s	CAPACITOR,CHIP CERAMIC 0.1MF
C979	1-107-826-11	s	CAPACITOR,CHIP CERAMIC 0.1MF
C980	1-107-826-11	s	CAPACITOR,CHIP CERAMIC 0.1MF
C981	1-107-826-11	s	CAPACITOR,CHIP CERAMIC 0.1MF
C982	1-107-826-11	s	CAPACITOR,CHIP CERAMIC 0.1MF
C983	1-131-998-11	s	CAP, SOLID ELECT 82MF 6.3 V
C984	1-131-998-11	s	CAP, SOLID ELECT 82MF 6.3 V
C985	1-131-998-11	s	CAP, SOLID ELECT 82MF 6.3 V
C986	1-131-998-11	s	CAP, SOLID ELECT 82MF 6.3 V
C987	1-131-998-11	s	CAP, SOLID ELECT 82MF 6.3 V
C988	1-131-998-11	s	CAP, SOLID ELECT 82MF 6.3 V
C989 *2	1-165-989-11	s	CAPACITOR, CERAMIC 10MF (2012)
*1	1-127-692-11	s	CAP, CHIP CERAMIC 10MF B 3216
C990 *2	1-165-989-11	s	CAPACITOR, CERAMIC 10MF (2012)
*1	1-127-692-11	s	CAP, CHIP CERAMIC 10MF B 3216
C991	1-107-826-11	s	CAPACITOR,CHIP CERAMIC 0.1MF
C1102 *2	1-165-989-11	s	CAPACITOR, CERAMIC 10MF (2012)
*1	1-127-692-11	s	CAP, CHIP CERAMIC 10MF B 3216
C1103	1-107-826-11	s	CAPACITOR,CHIP CERAMIC 0.1MF
C1104	1-107-826-11	s	CAPACITOR,CHIP CERAMIC 0.1MF
C1105	1-107-826-11	s	CAPACITOR,CHIP CERAMIC 0.1MF
C1106	1-135-341-11	s	CAPACITOR,SOLID ELECT 330MF
C1107 *N	1-162-925-11	s	CAPACITOR,CERAMIC 68PF/50V CH
*P	1-162-927-11	s	CAPACITOR,CERAMIC 100PF/50V CH
C1108 *2	1-100-743-91	s	CAPACITOR,CERAMIC2.2MF B(2012)
*1	1-125-889-11	s	CAPACITOR, CERAMIC 2.2MF
C1109	1-135-341-11	s	CAPACITOR,SOLID ELECT 330MF
C1110	1-115-416-11	s	CAPACITOR,CERAMIC 1000PF/25V
C1111	1-107-826-11	s	CAPACITOR,CHIP CERAMIC 0.1MF
C1112	1-107-826-11	s	CAPACITOR,CHIP CERAMIC 0.1MF
C1114	1-107-826-11	s	CAPACITOR,CHIP CERAMIC 0.1MF
C1116 *2	deleted		
*1	1-127-692-11	s	CAP, CHIP CERAMIC 10MF B 3216
C1117 *2	1-165-989-11	s	CAPACITOR, CERAMIC 10MF (2012)
*1	1-127-692-11	s	CAP, CHIP CERAMIC 10MF B 3216
C1118	1-100-159-91	s	CAP, CERAMIC 22MF B (SMD) 3216
C1119 *2	1-100-352-91	s	CAP, CHIP CERAMIC 1MF B (1608)
*1	1-127-573-11	s	CAPACITOR,CERAMIC 1MFB(2012)
C1121	1-162-970-11	s	CAPACITOR CERAMIC 0.01MF/25V B
C1122	1-100-159-91	s	CAP, CERAMIC 22MF B (SMD) 3216
C1125	1-162-928-11	s	CAPACITOR,CERAMIC 120PF/50V CH
C1126 *3	1-100-421-21	s	CAP, ELECT 220MF (6.3X5.9)
*1	1-131-999-11	s	CAPACITOR,SOLID ELECT 150MF
C1128	1-162-915-11	s	CAPACITOR,CERAMIC 10PF/50V CH
C1131 *3	1-100-421-21	s	CAP, ELECT 220MF (6.3X5.9)
*1	1-131-999-11	s	CAPACITOR,SOLID ELECT 150MF
C1132 *2	1-100-352-91	s	CAP, CHIP CERAMIC 1MF B (1608)
*1	1-107-826-11	s	CAPACITOR,CHIP CERAMIC 0.1MF
C1133	1-107-826-11	s	CAPACITOR,CHIP CERAMIC 0.1MF

(DM-123/P BOARD [SUFFIX 15-])

Ref. No. or Q'ty	Part No.	SP	Description
C1134	1-107-826-11	s	CAPACITOR,CHIP CERAMIC 0.1MF
C1135	1-162-927-11	s	CAPACITOR,CERAMIC 100PF/50V CH
C1138	1-100-159-91	s	CAP, CERAMIC 22MF B (SMD) 3216
C1139	1-100-159-91	s	CAP, CERAMIC 22MF B (SMD) 3216
C1140	1-107-826-11	s	CAPACITOR,CHIP CERAMIC 0.1MF
C1141	1-107-826-11	s	CAPACITOR,CHIP CERAMIC 0.1MF
C1142	1-107-826-11	s	CAPACITOR,CHIP CERAMIC 0.1MF
C1143	1-100-159-91	s	CAP, CERAMIC 22MF B (SMD) 3216
C1144	1-100-159-91	s	CAP, CERAMIC 22MF B (SMD) 3216
C1145	1-100-159-91	s	CAP, CERAMIC 22MF B (SMD) 3216
C1148	1-107-826-11	s	CAPACITOR,CHIP CERAMIC 0.1MF
C1201 *3	1-100-421-21	s	CAP, ELECT 220MF (6.3X5.9)
*1	1-131-999-11	s	CAPACITOR,SOLID ELECT 150MF
C1202 *2	1-165-989-11	s	CAPACITOR, CERAMIC 10MF (2012)
*1	1-127-692-11	s	CAP, CHIP CERAMIC 10MF B 3216
C1203	1-107-826-11	s	CAPACITOR,CHIP CERAMIC 0.1MF
C1204	1-107-826-11	s	CAPACITOR,CHIP CERAMIC 0.1MF
C1205 *2	1-100-743-91	s	CAPACITOR,CERAMIC2.2MF B(2012)
*1	1-125-889-11	s	CAPACITOR, CERAMIC 2.2MF
C1206	1-107-826-11	s	CAPACITOR,CHIP CERAMIC 0.1MF
C1207	1-115-416-11	s	CAPACITOR,CERAMIC 1000PF/25V
C1209	1-107-826-11	s	CAPACITOR,CHIP CERAMIC 0.1MF
C1210	1-107-826-11	s	CAPACITOR,CHIP CERAMIC 0.1MF
C1211	1-107-826-11	s	CAPACITOR,CHIP CERAMIC 0.1MF
C1212 *2	deleted		
*1	1-127-692-11	s	CAP, CHIP CERAMIC 10MF B 3216
C1213 *2	1-165-989-11	s	CAPACITOR, CERAMIC 10MF (2012)
*1	1-127-692-11	s	CAP, CHIP CERAMIC 10MF B 3216
C1214	1-100-159-91	s	CAP, CERAMIC 22MF B (SMD) 3216
C1215 *2	1-100-352-91	s	CAP, CHIP CERAMIC 1MF B (1608)
*1	1-127-573-11	s	CAPACITOR,CERAMIC 1MFB(2012)
C1217	1-162-970-11	s	CAPACITOR CERAMIC 0.01MF/25V B
C1218	1-107-826-11	s	CAPACITOR,CHIP CERAMIC 0.1MF
C1220	1-162-928-11	s	CAPACITOR,CERAMIC 120PF/50V CH
C1222	1-162-915-11	s	CAPACITOR,CERAMIC 10PF/50V CH
C1227 *2	1-100-352-91	s	CAP, CHIP CERAMIC 1MF B (1608)
*1	1-107-826-11	s	CAPACITOR,CHIP CERAMIC 0.1MF
C1228	1-107-826-11	s	CAPACITOR,CHIP CERAMIC 0.1MF
C1229	1-107-826-11	s	CAPACITOR,CHIP CERAMIC 0.1MF
C1230	1-164-217-11	s	CAPACITOR,CERAMIC 150PF/50V CH
C1233	1-100-159-91	s	CAP, CERAMIC 22MF B (SMD) 3216
C1234 *2	1-165-989-11	s	CAPACITOR, CERAMIC 10MF (2012)
*1	1-100-159-91	s	CAP, CERAMIC 22MF B (SMD) 3216
C1235	1-107-826-11	s	CAPACITOR,CHIP CERAMIC 0.1MF
C1236	1-107-826-11	s	CAPACITOR,CHIP CERAMIC 0.1MF
C1237	1-107-826-11	s	CAPACITOR,CHIP CERAMIC 0.1MF
C1238 *3	1-100-421-21	s	CAP, ELECT 220MF (6.3X5.9)
*1	1-131-999-11	s	CAPACITOR,SOLID ELECT 150MF
C1239	1-107-826-11	s	CAPACITOR,CHIP CERAMIC 0.1MF
C1240	1-107-826-11	s	CAPACITOR,CHIP CERAMIC 0.1MF
C1241	1-107-826-11	s	CAPACITOR,CHIP CERAMIC 0.1MF
C1242 *2	1-165-989-11	s	CAPACITOR, CERAMIC 10MF (2012)
C1301	1-126-391-11	s	CAPACITOR ELECT 47MF/6.3V(105)
C1302	1-126-391-11	s	CAPACITOR ELECT 47MF/6.3V(105)
C1303	1-107-826-11	s	CAPACITOR,CHIP CERAMIC 0.1MF
C1304	1-107-826-11	s	CAPACITOR,CHIP CERAMIC 0.1MF
C1305	1-164-813-11	s	CAPACITOR,CERAMIC 15PF/50V CH
C1305	1-162-917-11	s	CAPACITOR,CERAMIC 15PF/50V CH
C1306	1-164-227-11	s	CAPACITOR,CERAMIC 0.022MF/25V
C1308	1-107-826-11	s	CAPACITOR,CHIP CERAMIC 0.1MF

(DM-123/P BOARD [SUFFIX 15-])

Ref. No. or Q'ty	Part No.	SP	Description
C1309	1-107-826-11	s	CAPACITOR,CHIP CERAMIC 0.1MF
C1310	1-162-927-11	s	CAPACITOR,CERAMIC 100PF/50V CH
C1311	1-162-959-11	s	CAPACITOR,CERAMIC 330PF/50V SL
C1312	1-164-315-11	s	CAPACITOR,CERAMIC 470PF/50V CH
C1313	1-107-826-11	s	CAPACITOR,CHIP CERAMIC 0.1MF
C1314	1-164-227-11	s	CAPACITOR,CERAMIC 0.022MF/25V
C1316	1-164-227-11	s	CAPACITOR,CERAMIC 0.022MF/25V
C1317	1-164-227-11	s	CAPACITOR,CERAMIC 0.022MF/25V
C1318	1-164-227-11	s	CAPACITOR,CERAMIC 0.022MF/25V
C1319 *2	1-165-989-11	s	CAPACITOR, CERAMIC 10MF (2012)
*1	1-127-692-11	s	CAP, CHIP CERAMIC 10MF B 3216
C1320	1-164-227-11	s	CAPACITOR,CERAMIC 0.022MF/25V
C1322	1-126-391-11	s	CAPACITOR ELECT 47MF/6.3V(105)
C1323	1-107-826-11	s	CAPACITOR,CHIP CERAMIC 0.1MF
C1324	1-107-826-11	s	CAPACITOR,CHIP CERAMIC 0.1MF
C1325	1-107-826-11	s	CAPACITOR,CHIP CERAMIC 0.1MF
C1326	1-162-921-11	s	CAPACITOR,CERAMIC 33PF/50V CH
C1327	1-107-826-11	s	CAPACITOR,CHIP CERAMIC 0.1MF
C1328	1-107-826-11	s	CAPACITOR,CHIP CERAMIC 0.1MF
C1329	1-164-227-11	s	CAPACITOR,CERAMIC 0.022MF/25V
C1330	1-162-921-11	s	CAPACITOR,CERAMIC 33PF/50V CH
C1332	1-107-826-11	s	CAPACITOR,CHIP CERAMIC 0.1MF
C1401 *2	1-100-352-91	s	CAP, CHIP CERAMIC 1MF B (1608)
*1	1-127-573-11	s	CAPACITOR,CERAMIC 1MFB(2012)
C1402 *2	1-100-352-91	s	CAP, CHIP CERAMIC 1MF B (1608)
*1	1-127-573-11	s	CAPACITOR,CERAMIC 1MFB(2012)
C1403	1-162-927-11	s	CAPACITOR,CERAMIC 100PF/50V CH
C1404	1-164-315-11	s	CAPACITOR,CERAMIC 470PF/50V CH
C1405	1-107-826-11	s	CAPACITOR,CHIP CERAMIC 0.1MF
C1406	1-164-227-11	s	CAPACITOR,CERAMIC 0.022MF/25V
C1407	1-115-416-11	s	CAPACITOR,CERAMIC 1000PF/25V
C1408	1-164-227-11	s	CAPACITOR,CERAMIC 0.022MF/25V
C1409 *2	1-100-352-91	s	CAP, CHIP CERAMIC 1MF B (1608)
*1	1-127-573-11	s	CAPACITOR,CERAMIC 1MFB(2012)
C1410	1-107-826-11	s	CAPACITOR,CHIP CERAMIC 0.1MF
C1411	1-107-826-11	s	CAPACITOR,CHIP CERAMIC 0.1MF
C1412 *2	1-100-352-91	s	CAP, CHIP CERAMIC 1MF B (1608)
*1	1-127-573-11	s	CAPACITOR,CERAMIC 1MFB(2012)
C1413	1-107-826-11	s	CAPACITOR,CHIP CERAMIC 0.1MF
C1414	1-107-826-11	s	CAPACITOR,CHIP CERAMIC 0.1MF
C1415	1-107-826-11	s	CAPACITOR,CHIP CERAMIC 0.1MF
C1416	1-162-927-11	s	CAPACITOR,CERAMIC 100PF/50V CH
C1417 *2	1-115-416-11	s	CAPACITOR,CERAMIC 1000PF/25V
C1418	1-107-826-11	s	CAPACITOR,CHIP CERAMIC 0.1MF
C1419	1-164-227-11	s	CAPACITOR,CERAMIC 0.022MF/25V
C1420	1-162-923-11	s	CAPACITOR,CERAMIC 47PF/50V CH
C1421	1-107-826-11	s	CAPACITOR,CHIP CERAMIC 0.1MF
C1422	1-107-826-11	s	CAPACITOR,CHIP CERAMIC 0.1MF
C1423	1-107-826-11	s	CAPACITOR,CHIP CERAMIC 0.1MF
C1425	1-164-315-11	s	CAPACITOR,CERAMIC 470PF/50V CH
C1426	1-162-970-11	s	CAPACITOR CERAMIC 0.01MF/25V B
C1427	1-162-927-11	s	CAPACITOR,CERAMIC 100PF/50V CH
C1428	1-126-391-11	s	CAPACITOR ELECT 47MF/6.3V(105)
C1429	1-107-826-11	s	CAPACITOR,CHIP CERAMIC 0.1MF
C1430	1-107-826-11	s	CAPACITOR,CHIP CERAMIC 0.1MF
C1432	1-162-927-11	s	CAPACITOR,CERAMIC 100PF/50V CH
C1433	1-162-927-11	s	CAPACITOR,CERAMIC 100PF/50V CH
C1434	1-107-826-11	s	CAPACITOR,CHIP CERAMIC 0.1MF
C1435	1-162-928-11	s	CAPACITOR,CERAMIC 120PF/50V CH
C1436	1-107-826-11	s	CAPACITOR,CHIP CERAMIC 0.1MF

(DM-123/P BOARD [SUFFIX 15-])

Ref. No. or Q'ty	Part No.	SP	Description
C1437	1-162-927-11	s	CAPACITOR,CERAMIC 100PF/50V CH
C1438	1-107-826-11	s	CAPACITOR,CHIP CERAMIC 0.1MF
C1439	1-107-826-11	s	CAPACITOR,CHIP CERAMIC 0.1MF
C1440	1-107-826-11	s	CAPACITOR,CHIP CERAMIC 0.1MF
C1441	1-107-826-11	s	CAPACITOR,CHIP CERAMIC 0.1MF
C1442	1-131-661-11	s	CAPACITOR,ELECT 100MF/10V CHIP
C1443 *2	1-100-352-91	s	CAP, CHIP CERAMIC 1MF B (1608)
*1	1-127-573-11	s	CAPACITOR,CERAMIC 1MFB(2012)
C1444 *2	1-128-934-11	s	CAPCITOR CHIP CERAMIC 0.33MF
*1	1-110-501-11	s	CAPACITOR CERAMIC 0.33MF/16V
C1446	1-162-927-11	s	CAPACITOR,CERAMIC 100PF/50V CH
C1449 *2	1-100-743-91	s	CAPACITOR,CERAMIC2.2MF B(2012)
*1	1-125-889-11	s	CAPACITOR, CERAMIC 2.2MF
C1450 *2	1-128-934-11	s	CAPCITOR CHIP CERAMIC 0.33MF
*1	1-110-501-11	s	CAPACITOR CERAMIC 0.33MF/16V
C1457	1-107-826-11	s	CAPACITOR,CHIP CERAMIC 0.1MF
C1458	1-126-391-11	s	CAPACITOR ELECT 47MF/6.3V(105)
C1459	1-115-416-11	s	CAPACITOR,CERAMIC 1000PF/25V
C1460	1-107-826-11	s	CAPACITOR,CHIP CERAMIC 0.1MF
C1461	1-107-826-11	s	CAPACITOR,CHIP CERAMIC 0.1MF
C1462	1-126-391-11	s	CAPACITOR ELECT 47MF/6.3V(105)
C1463	1-107-826-11	s	CAPACITOR,CHIP CERAMIC 0.1MF
C1464	1-107-826-11	s	CAPACITOR,CHIP CERAMIC 0.1MF
C1468	1-107-826-11	s	CAPACITOR,CHIP CERAMIC 0.1MF
C1469	1-107-826-11	s	CAPACITOR,CHIP CERAMIC 0.1MF
C1470	1-107-826-11	s	CAPACITOR,CHIP CERAMIC 0.1MF
C1471	1-164-227-11	s	CAPACITOR,CERAMIC 0.022MF/25V
C1472	1-107-826-11	s	CAPACITOR,CHIP CERAMIC 0.1MF
C1480	1-164-227-11	s	CAPACITOR,CERAMIC 0.022MF/25V
C1481	1-164-227-11	s	CAPACITOR,CERAMIC 0.022MF/25V
C1482	1-107-826-11	s	CAPACITOR,CHIP CERAMIC 0.1MF
C1484	1-107-826-11	s	CAPACITOR,CHIP CERAMIC 0.1MF
C1485	1-107-826-11	s	CAPACITOR,CHIP CERAMIC 0.1MF
C1486 *2	1-125-891-11	s	CAPACITOR CERAMIC 0.47MF/10V
*1	1-107-826-11	s	CAPACITOR,CHIP CERAMIC 0.1MF
C1487	1-107-826-11	s	CAPACITOR,CHIP CERAMIC 0.1MF
C1488	1-162-970-11	s	CAPACITOR CERAMIC 0.01MF/25V B
C1489	1-107-826-11	s	CAPACITOR,CHIP CERAMIC 0.1MF
C1490 *2	1-115-416-11	s	CAPACITOR,CERAMIC 1000PF/25V
*1	1-162-970-11	s	CAPACITOR CERAMIC 0.01MF/25V B
C1491 *2	1-115-416-11	s	CAPACITOR,CERAMIC 1000PF/25V
*1	1-162-970-11	s	CAPACITOR CERAMIC 0.01MF/25V B
C1492	1-107-826-11	s	CAPACITOR,CHIP CERAMIC 0.1MF
C1493 *2	1-115-416-11	s	CAPACITOR,CERAMIC 1000PF/25V
C1494 *2	1-162-922-11	s	CAPACITOR,CERAMIC 39PF/50V CH
C1501	1-126-391-11	s	CAPACITOR ELECT 47MF/6.3V(105)
C1502	1-126-391-11	s	CAPACITOR ELECT 47MF/6.3V(105)
C1503	1-107-826-11	s	CAPACITOR,CHIP CERAMIC 0.1MF
C1504	1-107-826-11	s	CAPACITOR,CHIP CERAMIC 0.1MF
C1505	1-164-227-11	s	CAPACITOR,CERAMIC 0.022MF/25V
C1507	1-107-826-11	s	CAPACITOR,CHIP CERAMIC 0.1MF
C1508	1-107-826-11	s	CAPACITOR,CHIP CERAMIC 0.1MF
C1509	1-164-813-11	s	CAPACITOR,CERAMIC 15PF/50V CH
C1510	1-162-919-11	s	CAPACITOR,CERAMIC 22PF/50V CH
C1511	1-162-928-11	s	CAPACITOR,CERAMIC 120PF/50V CH
C1512	1-162-959-11	s	CAPACITOR,CERAMIC 330PF/50V SL
C1513	1-162-915-11	s	CAPACITOR,CERAMIC 10PF/50V CH
C1514	1-162-910-11	s	CAPACITOR,CERAMIC 5PF/50V 1608
C1515	1-162-916-11	s	CAPACITOR,CERAMIC 12PF/50V CH
C1516	1-107-826-11	s	CAPACITOR,CHIP CERAMIC 0.1MF

(DM-123/P BOARD [SUFFIX 15-])

Ref. No. or Q'ty	Part No.	SP	Description
C1517	1-162-916-11	s	CAPACITOR,CERAMIC 12PF/50V CH
C1518	1-162-923-11	s	CAPACITOR,CERAMIC 47PF/50V CH
C1519	1-164-227-11	s	CAPACITOR,CERAMIC 0.022MF/25V
C1521	1-107-826-11	s	CAPACITOR,CHIP CERAMIC 0.1MF
C1522	1-164-227-11	s	CAPACITOR,CERAMIC 0.022MF/25V
C1523	1-164-227-11	s	CAPACITOR,CERAMIC 0.022MF/25V
C1524	1-164-227-11	s	CAPACITOR,CERAMIC 0.022MF/25V
C1525 *2	1-165-989-11	s	CAPACITOR, CERAMIC 10MF (2012)
*1	1-127-692-11	s	CAP, CHIP CERAMIC 10MF B 3216
C1526	1-164-227-11	s	CAPACITOR,CERAMIC 0.022MF/25V
C1527	1-107-826-11	s	CAPACITOR,CHIP CERAMIC 0.1MF
C1528	1-126-391-11	s	CAPACITOR ELECT 47MF/6.3V(105)
C1529	1-107-826-11	s	CAPACITOR,CHIP CERAMIC 0.1MF
C1530	1-107-826-11	s	CAPACITOR,CHIP CERAMIC 0.1MF
C1531	1-107-826-11	s	CAPACITOR,CHIP CERAMIC 0.1MF
C1532	1-162-921-11	s	CAPACITOR,CERAMIC 33PF/50V CH
C1533	1-107-826-11	s	CAPACITOR,CHIP CERAMIC 0.1MF
C1534	1-107-826-11	s	CAPACITOR,CHIP CERAMIC 0.1MF
C1535	1-164-227-11	s	CAPACITOR,CERAMIC 0.022MF/25V
C1536	1-162-921-11	s	CAPACITOR,CERAMIC 33PF/50V CH
C1601 *2	1-100-352-91	s	CAP, CHIP CERAMIC 1MF B (1608)
*1	1-127-573-11	s	CAPACITOR,CERAMIC 1MFB(2012)
C1602	1-107-826-11	s	CAPACITOR,CHIP CERAMIC 0.1MF
C1604	1-162-915-11	s	CAPACITOR,CERAMIC 10PF/50V CH
C1605	1-162-923-11	s	CAPACITOR,CERAMIC 47PF/50V CH
C1607	1-107-826-11	s	CAPACITOR,CHIP CERAMIC 0.1MF
C1608	1-164-230-11	s	CAPACITOR,CERAMIC 220PF/50V
C1610	1-162-923-11	s	CAPACITOR,CERAMIC 47PF/50V CH
C1611	1-107-826-11	s	CAPACITOR,CHIP CERAMIC 0.1MF
C1612	1-162-970-11	s	CAPACITOR CERAMIC 0.01MF/25V B
C1613	1-115-416-11	s	CAPACITOR,CERAMIC 1000PF/25V
C1615 *2	1-100-352-91	s	CAP, CHIP CERAMIC 1MF B (1608)
*1	1-127-573-11	s	CAPACITOR,CERAMIC 1MFB(2012)
C1616	1-107-826-11	s	CAPACITOR,CHIP CERAMIC 0.1MF
C1617	1-107-826-11	s	CAPACITOR,CHIP CERAMIC 0.1MF
C1618 *2	1-100-352-91	s	CAP, CHIP CERAMIC 1MF B (1608)
*1	1-127-573-11	s	CAPACITOR,CERAMIC 1MFB(2012)
C1619	1-107-826-11	s	CAPACITOR,CHIP CERAMIC 0.1MF
C1620	1-107-826-11	s	CAPACITOR,CHIP CERAMIC 0.1MF
C1622	1-162-927-11	s	CAPACITOR,CERAMIC 100PF/50V CH
C1623	1-164-227-11	s	CAPACITOR,CERAMIC 0.022MF/25V
C1624	1-107-826-11	s	CAPACITOR,CHIP CERAMIC 0.1MF
C1625	1-162-923-11	s	CAPACITOR,CERAMIC 47PF/50V CH
C1626	1-107-826-11	s	CAPACITOR,CHIP CERAMIC 0.1MF
C1627	1-162-928-11	s	CAPACITOR,CERAMIC 120PF/50V CH
C1628	1-162-970-11	s	CAPACITOR CERAMIC 0.01MF/25V B
C1630	1-107-826-11	s	CAPACITOR,CHIP CERAMIC 0.1MF
C1631	1-162-927-11	s	CAPACITOR,CERAMIC 100PF/50V CH
C1632	1-126-391-11	s	CAPACITOR ELECT 47MF/6.3V(105)
	1-104-608-11	s	CAPACITOR, ELECT 33MF/6.3V
C1633	1-107-826-11	s	CAPACITOR,CHIP CERAMIC 0.1MF
C1634	1-162-927-11	s	CAPACITOR,CERAMIC 100PF/50V CH
C1635	1-162-927-11	s	CAPACITOR,CERAMIC 100PF/50V CH
C1636	1-107-826-11	s	CAPACITOR,CHIP CERAMIC 0.1MF
C1637	1-162-928-11	s	CAPACITOR,CERAMIC 120PF/50V CH
C1638	1-107-826-11	s	CAPACITOR,CHIP CERAMIC 0.1MF
C1639	1-162-927-11	s	CAPACITOR,CERAMIC 100PF/50V CH
C1640	1-107-826-11	s	CAPACITOR,CHIP CERAMIC 0.1MF
C1641	1-107-826-11	s	CAPACITOR,CHIP CERAMIC 0.1MF
C1642	1-107-826-11	s	CAPACITOR,CHIP CERAMIC 0.1MF

(DM-123/P BOARD [SUFFIX 15-])

Ref. No. or Q'ty	Part No.	SP	Description
C1643	1-107-826-11	s	CAPACITOR,CHIP CERAMIC 0.1MF
C1644	1-131-661-11	s	CAPACITOR,ELECT 100MF/10V CHIP
C1645 *2	1-100-352-91	s	CAP, CHIP CERAMIC 1MF B (1608)
*1	1-127-573-11	s	CAPACITOR,CERAMIC 1MFB(2012)
C1646 *2	1-128-934-11	s	CAPCITOR CHIP CERAMIC 0.33MF
*1	1-110-501-11	s	CAPACITOR CERAMIC 0.33MF/16V
C1647	1-162-927-11	s	CAPACITOR,CERAMIC 100PF/50V CH
C1657	1-115-416-11	s	CAPACITOR,CERAMIC 1000PF/25V
C1658	1-107-826-11	s	CAPACITOR,CHIP CERAMIC 0.1MF
C1659	1-107-826-11	s	CAPACITOR,CHIP CERAMIC 0.1MF
C1661	1-126-391-11	s	CAPACITOR ELECT 47MF/6.3V(105)
C1662	1-126-391-11	s	CAPACITOR ELECT 47MF/6.3V(105)
C1663	1-107-826-11	s	CAPACITOR,CHIP CERAMIC 0.1MF
C1664	1-107-826-11	s	CAPACITOR,CHIP CERAMIC 0.1MF
C1665	1-107-826-11	s	CAPACITOR,CHIP CERAMIC 0.1MF
C1666	1-107-826-11	s	CAPACITOR,CHIP CERAMIC 0.1MF
C1667	1-164-227-11	s	CAPACITOR,CERAMIC 0.022MF/25V
C1680	1-107-826-11	s	CAPACITOR,CHIP CERAMIC 0.1MF
C1681	1-107-826-11	s	CAPACITOR,CHIP CERAMIC 0.1MF
C1682	1-107-826-11	s	CAPACITOR,CHIP CERAMIC 0.1MF
C1683 *2	1-100-743-91	s	CAPACITOR,CERAMIC2.2MF B(2012)
*1	1-125-889-11	s	CAPACITOR, CERAMIC 2.2MF
C1684 *2	1-127-715-11	s	CAPACITOR,CERAMIC 0.22MF B1608
*1	1-115-340-11	s	CAPACITOR CERAMIC 0.22MF/25V B
C1701	1-107-826-11	s	CAPACITOR,CHIP CERAMIC 0.1MF
C1702	1-107-826-11	s	CAPACITOR,CHIP CERAMIC 0.1MF
C1703	1-107-826-11	s	CAPACITOR,CHIP CERAMIC 0.1MF
C1704	1-107-826-11	s	CAPACITOR,CHIP CERAMIC 0.1MF
C1705	1-107-826-11	s	CAPACITOR,CHIP CERAMIC 0.1MF
C1706	1-107-826-11	s	CAPACITOR,CHIP CERAMIC 0.1MF
C1707	1-107-826-11	s	CAPACITOR,CHIP CERAMIC 0.1MF
C1708	1-107-826-11	s	CAPACITOR,CHIP CERAMIC 0.1MF
C1709	1-107-826-11	s	CAPACITOR,CHIP CERAMIC 0.1MF
C1710	1-107-826-11	s	CAPACITOR,CHIP CERAMIC 0.1MF
C1711	1-107-826-11	s	CAPACITOR,CHIP CERAMIC 0.1MF
C1712	1-126-391-11	s	CAPACITOR ELECT 47MF/6.3V(105)
C1713	1-107-826-11	s	CAPACITOR,CHIP CERAMIC 0.1MF
C1714	1-126-391-11	s	CAPACITOR ELECT 47MF/6.3V(105)
C1715	1-107-826-11	s	CAPACITOR,CHIP CERAMIC 0.1MF
C1716	1-162-925-11	s	CAPACITOR,CERAMIC 68PF/50V CH
C1717	1-162-925-11	s	CAPACITOR,CERAMIC 68PF/50V CH
C1718	1-162-925-11	s	CAPACITOR,CERAMIC 68PF/50V CH
C1719	1-162-925-11	s	CAPACITOR,CERAMIC 68PF/50V CH
C1720	1-162-925-11	s	CAPACITOR,CERAMIC 68PF/50V CH
C1721	1-162-925-11	s	CAPACITOR,CERAMIC 68PF/50V CH
C1722	1-162-925-11	s	CAPACITOR,CERAMIC 68PF/50V CH
C1723	1-162-925-11	s	CAPACITOR,CERAMIC 68PF/50V CH
C1724	1-162-925-11	s	CAPACITOR,CERAMIC 68PF/50V CH
C1725	1-162-925-11	s	CAPACITOR,CERAMIC 68PF/50V CH
C1726	1-162-925-11	s	CAPACITOR,CERAMIC 68PF/50V CH
C1727	1-162-925-11	s	CAPACITOR,CERAMIC 68PF/50V CH
C1728	1-162-925-11	s	CAPACITOR,CERAMIC 68PF/50V CH
C1729	1-162-925-11	s	CAPACITOR,CERAMIC 68PF/50V CH
C1730	1-162-925-11	s	CAPACITOR,CERAMIC 68PF/50V CH
C1731	1-107-826-11	s	CAPACITOR,CHIP CERAMIC 0.1MF
C1732	1-107-826-11	s	CAPACITOR,CHIP CERAMIC 0.1MF
C1733	1-107-826-11	s	CAPACITOR,CHIP CERAMIC 0.1MF
C1734	1-107-826-11	s	CAPACITOR,CHIP CERAMIC 0.1MF
C1735	1-107-826-11	s	CAPACITOR,CHIP CERAMIC 0.1MF

(DM-123/P BOARD [SUFFIX 15-])

Ref. No. or Q'ty	Part No.	SP	Description
C1736	1-107-826-11	s	CAPACITOR,CHIP CERAMIC 0.1MF
C1737	1-107-826-11	s	CAPACITOR,CHIP CERAMIC 0.1MF
C1738	1-107-826-11	s	CAPACITOR,CHIP CERAMIC 0.1MF
C1739	1-107-826-11	s	CAPACITOR,CHIP CERAMIC 0.1MF
C1740 *2	1-165-989-11	s	CAPACITOR, CERAMIC 10MF (2012)
*1	1-127-692-11	s	CAP, CHIP CERAMIC 10MF B 3216
C1741	1-107-826-11	s	CAPACITOR,CHIP CERAMIC 0.1MF
C1742	1-107-826-11	s	CAPACITOR,CHIP CERAMIC 0.1MF
C1801 *2	1-115-416-11	s	CAPACITOR,CERAMIC 1000PF/25V
*1	1-165-176-11	s	CAPACITOR,CERAMIC 47000PF/16V
C1802	1-107-826-11	s	CAPACITOR,CHIP CERAMIC 0.1MF
C1803	1-107-826-11	s	CAPACITOR,CHIP CERAMIC 0.1MF
C1804	1-107-826-11	s	CAPACITOR,CHIP CERAMIC 0.1MF
C1806	1-107-826-11	s	CAPACITOR,CHIP CERAMIC 0.1MF
C1807	1-107-826-11	s	CAPACITOR,CHIP CERAMIC 0.1MF
C1808 *2	1-115-416-11	s	CAPACITOR,CERAMIC 1000PF/25V
C1809 *2	1-164-739-11	s	CAPACITOR CERAMIC 560PF (1608)
C1810	1-162-927-11	s	CAPACITOR,CERAMIC 100PF/50V CH
C1812 *N	1-162-919-11	s	CAPACITOR,CERAMIC 22PF/50V CH
*P	1-162-921-11	s	CAPACITOR,CERAMIC 33PF/50V CH
C1813	1-107-826-11	s	CAPACITOR,CHIP CERAMIC 0.1MF
C1814	1-107-826-11	s	CAPACITOR,CHIP CERAMIC 0.1MF
C1816 *N	1-162-925-11	s	CAPACITOR,CERAMIC 68PF/50V CH
*P	1-162-927-11	s	CAPACITOR,CERAMIC 100PF/50V CH
C1817	1-107-826-11	s	CAPACITOR,CHIP CERAMIC 0.1MF
C1818 *N	1-162-919-11	s	CAPACITOR,CERAMIC 22PF/50V CH
*P	1-162-921-11	s	CAPACITOR,CERAMIC 33PF/50V CH
C1819	1-126-391-11	s	CAPACITOR ELECT 47MF/6.3V(105)
C1820	1-107-826-11	s	CAPACITOR,CHIP CERAMIC 0.1MF
C1821	1-107-826-11	s	CAPACITOR,CHIP CERAMIC 0.1MF
C1822 *P	1-107-826-11	s	CAPACITOR,CHIP CERAMIC 0.1MF
C1823 *P	1-162-927-11	s	CAPACITOR,CERAMIC 100PF/50V CH
C1827	1-126-391-11	s	CAPACITOR ELECT 47MF/6.3V(105)
C1828	1-107-826-11	s	CAPACITOR,CHIP CERAMIC 0.1MF
C1829	1-107-826-11	s	CAPACITOR,CHIP CERAMIC 0.1MF
C1831	1-107-826-11	s	CAPACITOR,CHIP CERAMIC 0.1MF
C1834	1-107-826-11	s	CAPACITOR,CHIP CERAMIC 0.1MF
C1835	1-107-826-11	s	CAPACITOR,CHIP CERAMIC 0.1MF
C1839	1-107-826-11	s	CAPACITOR,CHIP CERAMIC 0.1MF
C1841	1-107-826-11	s	CAPACITOR,CHIP CERAMIC 0.1MF
C1843	1-107-826-11	s	CAPACITOR,CHIP CERAMIC 0.1MF
C1844	1-126-391-11	s	CAPACITOR ELECT 47MF/6.3V(105)
C1845	1-107-826-11	s	CAPACITOR,CHIP CERAMIC 0.1MF
C1846	1-107-826-11	s	CAPACITOR,CHIP CERAMIC 0.1MF
C1847 *2	1-100-743-91	s	CAPACITOR,CERAMIC2.2MF B(2012)
*1	1-125-889-11	s	CAPACITOR, CERAMIC 2.2MF
C1849	1-107-826-11	s	CAPACITOR,CHIP CERAMIC 0.1MF
C1850	1-107-826-11	s	CAPACITOR,CHIP CERAMIC 0.1MF
C1851	1-107-826-11	s	CAPACITOR,CHIP CERAMIC 0.1MF
C1852 *2	1-165-989-11	s	CAPACITOR, CERAMIC 10MF (2012)
*1	1-127-692-11	s	CAP, CHIP CERAMIC 10MF B 3216
C1853	1-126-391-11	s	CAPACITOR ELECT 47MF/6.3V(105)
C1854	1-107-826-11	s	CAPACITOR,CHIP CERAMIC 0.1MF
C1855	1-107-826-11	s	CAPACITOR,CHIP CERAMIC 0.1MF
C1856	1-107-826-11	s	CAPACITOR,CHIP CERAMIC 0.1MF
C1857	1-107-826-11	s	CAPACITOR,CHIP CERAMIC 0.1MF
C1858	1-107-826-11	s	CAPACITOR,CHIP CERAMIC 0.1MF
C1859	1-107-826-11	s	CAPACITOR,CHIP CERAMIC 0.1MF
C1860	1-162-921-11	s	CAPACITOR,CERAMIC 33PF/50V CH
C1861	1-107-826-11	s	CAPACITOR,CHIP CERAMIC 0.1MF

(DM-123/P BOARD [SUFFIX 15-])

Ref. No. or Q'ty	Part No.	SP	Description	
C1862	1-107-826-11	s	CAPACITOR,CHIP CERAMIC 0.1MF	
C1863	1-107-826-11	s	CAPACITOR,CHIP CERAMIC 0.1MF	
C1864	1-107-826-11	s	CAPACITOR,CHIP CERAMIC 0.1MF	
C1865 *N	1-162-921-11	s	CAPACITOR,CERAMIC 33PF/50V CH	
*P	1-162-920-11	s	CAPACITOR,CERAMIC 27PF/50V CH	
C1866	1-107-826-11	s	CAPACITOR,CHIP CERAMIC 0.1MF	
C1867	1-107-826-11	s	CAPACITOR,CHIP CERAMIC 0.1MF	
C1868	1-107-826-11	s	CAPACITOR,CHIP CERAMIC 0.1MF	
C1869	1-107-826-11	s	CAPACITOR,CHIP CERAMIC 0.1MF	
C1870	1-162-970-11	s	CAPACITOR CERAMIC 0.01MF/25V B	
C1871	1-107-826-11	s	CAPACITOR,CHIP CERAMIC 0.1MF	
C1872	1-107-826-11	s	CAPACITOR,CHIP CERAMIC 0.1MF	
C1873	1-107-826-11	s	CAPACITOR,CHIP CERAMIC 0.1MF	
C1874 *2	1-115-416-11	s	CAPACITOR,CERAMIC 1000PF/25V	
*1	1-162-970-11	s	CAPACITOR CERAMIC 0.01MF/25V B	
C1875	1-164-315-11	s	CAPACITOR,CERAMIC 470PF/50V CH	
C1901	1-107-826-11	s	CAPACITOR,CHIP CERAMIC 0.1MF	
C1902	1-107-826-11	s	CAPACITOR,CHIP CERAMIC 0.1MF	
C1903	1-107-826-11	s	CAPACITOR,CHIP CERAMIC 0.1MF	
C1904	1-107-826-11	s	CAPACITOR,CHIP CERAMIC 0.1MF	
D101	8-719-941-23	s	DIODE DA204U	
D301	8-719-941-23	s	DIODE DA204U	
D501	8-719-024-81	s	DIODE 1SS300-TE85L	
D502	8-719-024-81	s	DIODE 1SS300-TE85L	
D503	8-719-941-23	s	DIODE DA204U	
D504	8-719-801-78	s	DIODE 1SS184	
D701	8-719-024-81	s	DIODE 1SS300-TE85L	
D702	8-719-941-23	s	DIODE DA204U	
D703	8-719-801-78	s	DIODE 1SS184	
D910	8-719-024-81	s	DIODE 1SS300-TE85L	
D911	8-719-024-81	s	DIODE 1SS300-TE85L	
D912	8-719-024-81	s	DIODE 1SS300-TE85L	
D913	8-719-024-81	s	DIODE 1SS300-TE85L	
D914	8-719-024-81	s	DIODE 1SS300-TE85L	
D915	8-719-024-81	s	DIODE 1SS300-TE85L	
D916	8-719-024-81	s	DIODE 1SS300-TE85L	
D917	8-719-024-81	s	DIODE 1SS300-TE85L	
D918 *3	8-719-024-81	s	DIODE 1SS300-TE85L	
D1101	8-719-941-23	s	DIODE DA204U	
D1102	8-719-941-23	s	DIODE DA204U	
D1103	8-719-941-23	s	DIODE DA204U	
D1104	8-719-070-20	s	DIODE RB706F-40	
D1201	8-719-941-23	s	DIODE DA204U	
D1204	8-719-070-20	s	DIODE RB706F-40	
D1301	8-719-941-23	s	DIODE DA204U	
D1401	8-719-941-23	s	DIODE DA204U	
D1402	8-719-941-23	s	DIODE DA204U	
D1403	8-719-941-23	s	DIODE DA204U	
D1404	8-719-941-23	s	DIODE DA204U	
D1405	8-719-041-39	s	DIODE KV1470	(5MA)
D1406	8-719-041-39	s	DIODE KV1470	(5MA)
D1501	8-719-941-23	s	DIODE DA204U	
D1502	8-719-024-81	s	DIODE 1SS300-TE85L	
D1601	8-719-941-23	s	DIODE DA204U	
D1602	8-719-941-23	s	DIODE DA204U	
D1603	8-719-041-39	s	DIODE KV1470	(5MA)
D1604	8-719-041-39	s	DIODE KV1470	(5MA)
D1701	8-719-801-78	s	DIODE 1SS184	
D1705	8-719-024-81	s	DIODE 1SS300-TE85L	

(DM-123/P BOARD [SUFFIX 15-])

Ref. No. or Q'ty	Part No.	SP	Description
D1706	8-719-801-78	s	DIODE 1SS184
D1802	8-719-064-52	s	DIODE CL-191YG-CD-T
D1803	8-719-064-52	s	DIODE CL-191YG-CD-T
D1804	8-719-941-23	s	DIODE DA204U
D1805	8-719-801-78	s	DIODE 1SS184
D1809	8-719-024-81	s	DIODE 1SS300-TE85L
D1810	8-719-024-81	s	DIODE 1SS300-TE85L
D1910	8-719-070-20	s	DIODE RB706F-40
DL101	1-416-645-11	s	DELAY LINE
DL103	1-416-478-11	s	DELAY LINE
DL301	1-416-646-11	s	DELAY LINE
DL303	1-416-480-11	s	DELAY LINE
E101	1-535-877-22	s	CHIP,CHECKER (TEST POINT)
E102	1-535-877-22	s	CHIP,CHECKER (TEST POINT)
E103	1-535-877-22	s	CHIP,CHECKER (TEST POINT)
E104	1-535-877-22	s	CHIP,CHECKER (TEST POINT)
E301	1-535-877-22	s	CHIP,CHECKER (TEST POINT)
E302	1-535-877-22	s	CHIP,CHECKER (TEST POINT)
E304	1-535-877-22	s	CHIP,CHECKER (TEST POINT)
E503	1-535-877-22	s	CHIP,CHECKER (TEST POINT)
E701	1-535-877-22	s	CHIP,CHECKER (TEST POINT)
E702	1-535-877-22	s	CHIP,CHECKER (TEST POINT)
E1101	1-535-877-22	s	CHIP,CHECKER (TEST POINT)
E1201	1-535-877-22	s	CHIP,CHECKER (TEST POINT)
E1301	1-535-877-22	s	CHIP,CHECKER (TEST POINT)
E1401	1-535-877-22	s	CHIP,CHECKER (TEST POINT)
E1501	1-535-877-22	s	CHIP,CHECKER (TEST POINT)
E1601	1-535-877-22	s	CHIP,CHECKER (TEST POINT)
E1701	1-535-877-22	s	CHIP,CHECKER (TEST POINT)
E1702	1-535-877-22	s	CHIP,CHECKER (TEST POINT)
E1801	1-535-877-22	s	CHIP,CHECKER (TEST POINT)
FL501 *P	1-234-007-11	s	FILTER, LOW PASS
FL502	1-234-001-11	s	FILTER, LOW PASS
FL503	1-234-000-11	s	FILTER, LOW PASS
FL504 *N	1-234-505-21	s	FILTER, LOW PASS (4.9MHZ)
*P	1-233-999-11	s	FILTER, LOW PASS
FL701 *P	1-234-002-11	s	FILTER, LOW PASS
FL702	1-234-008-11	s	FILTER, LOW PASS
FL703	1-234-004-11	s	FILTER, LOW PASS
FL1101	1-234-009-11	s	FILTER, LOW PASS
FL1201	1-234-003-11	s	FILTER, LOW PASS
FL1800	1-233-674-21	s	FILTER, EMI
FL1801	1-233-674-21	s	FILTER, EMI
IC101	8-752-052-75	s	IC CXA1479Q
IC102	8-759-523-02	s	IC TC74HC4053AFT(EL)
IC103 *2	6-705-117-01	s	IC UPC1663GV-E1
*1	8-759-112-53	s	IC UPC1663G
IC104	8-759-453-97	s	IC TC7SET08FU-TE85R
IC105	8-752-052-73	s	IC CXA1451M
IC106	8-759-564-49	s	IC TC7W53FU-TE12R
IC107	8-752-068-24	s	IC CXA1450M-TH
IC108	8-759-669-74	s	IC TL084CPWR-12
IC109	8-759-082-58	s	IC TC7W08FU
IC301	8-759-082-59	s	IC TC7W32FU
IC302	8-752-052-75	s	IC CXA1479Q
IC303	8-759-242-78	s	IC TC7W02F
IC304	8-759-564-49	s	IC TC7W53FU-TE12R
IC305	8-752-052-73	s	IC CXA1451M

(DM-123/P BOARD [SUFFIX 15-])

Ref. No. or Q'ty	Part No.	SP	Description
IC306	8-759-564-49	s	IC TC7W53FU-TE12R
IC308	8-759-669-74	s	IC TL084CPWR-12
IC309	8-759-082-58	s	IC TC7W08FU
IC502	8-759-082-59	s	IC TC7W32FU
IC503	8-759-327-01	s	IC NJM062V-TE2
IC504	8-759-564-49	s	IC TC7W53FU-TE12R
IC505	8-752-052-48	s	IC CXA1370Q
IC506	8-759-196-97	s	IC TC7SH32FU (TE85R)
IC507 *P	8-752-068-24	s	IC CXA1450M-TH
IC508	1-803-973-11	s	IC BP-108 (H8L2988)
IC509 *P	8-752-068-24	s	IC CXA1450M-TH
IC510 *P	8-752-068-24	s	IC CXA1450M-TH
IC511	8-752-052-73	s	IC CXA1451M
IC512	8-759-338-95	s	IC NJM2903V (TE2)
IC513	8-759-157-17	s	IC PQ05SZ1U
IC514	8-759-702-08	s	IC NJM360M
IC701	8-759-082-59	s	IC TC7W32FU
IC702	8-752-052-48	s	IC CXA1370Q
IC703	1-803-973-11	s	IC BP-108 (H8L2988)
IC704	8-759-338-95	s	IC NJM2903V (TE2)
IC705	8-752-052-73	s	IC CXA1451M
IC706	8-759-157-17	s	IC PQ05SZ1U
IC707	8-759-196-97	s	IC TC7SH32FU (TE85R)
IC901	8-759-549-15	s	IC SN74LV245APWR
IC902	8-759-523-02	s	IC TC74HC4053AFT(EL)
IC903	8-759-523-02	s	IC TC74HC4053AFT(EL)
IC904	8-759-688-12	s	IC TC74VHCT125AFT(EL)
IC905	8-759-536-93	s	IC M62371GP-600D
IC906	8-759-549-01	s	IC SN74LV125APWR
IC907 *2	8-759-196-93	s	IC TC7SH00FU-TE85R
IC908	6-800-404-01	s	IC UPD780058GC-284-8BT
IC910	8-759-453-97	s	IC TC7SET08FU-TE85R
IC911	8-759-337-40	s	IC NJM2904V(TE2)
IC912	8-759-549-01	s	IC SN74LV125APWR
IC913	8-759-157-17	s	IC PQ05SZ1U
IC914	8-759-157-17	s	IC PQ05SZ1U
IC915	8-759-539-89	s	IC LM2990SX-5.0
IC916	8-759-278-58	s	IC NJM4558V (TE2)
IC917	8-759-278-58	s	IC NJM4558V (TE2)
IC918	8-759-523-02	s	IC TC74HC4053AFT(EL)
IC919	8-759-491-47	s	IC TC74VHCT08FT (EL)
IC920	8-759-490-41	s	IC TC74VHCT541AFT(EL)
IC921	6-704-158-01	s	IC S-80827CNUA-B8MT2G
IC922	8-759-453-97	s	IC TC7SET08FU-TE85R
IC923	8-759-453-97	s	IC TC7SET08FU-TE85R
IC925	8-759-453-97	s	IC TC7SET08FU-TE85R
IC927	8-759-082-58	s	IC TC7W08FU
IC929	8-759-157-17	s	IC PQ05SZ1U
IC930	8-759-157-17	s	IC PQ05SZ1U
IC931	8-759-523-97	s	IC TC74VHC123AFT(EL)
IC932	8-759-523-94	s	IC TC74VHC32FT(EL)
IC934	8-759-524-18	s	IC TC74VHC163FT(EL)
IC935	8-759-524-18	s	IC TC74VHC163FT(EL)
IC936	8-759-491-45	s	IC TC74VHCT00AFT(EL)
IC937	8-759-082-58	s	IC TC7W08FU
IC938	8-759-524-22	s	IC TC74VHC175FT(EL)
IC939	8-759-488-29	s	IC TC7W66FU (TE12R)
IC1101	8-759-669-74	s	IC TL084CPWR-12
IC1102	8-759-488-29	s	IC TC7W66FU (TE12R)

(DM-123/P BOARD [SUFFIX 15-])

Ref. No. or Q'ty	Part No.	SP	Description
IC1103	6-702-436-01	s	IC AD8061ART-REEL7
IC1105	8-759-531-92	s	IC TC7WH04FU(TE12R)
IC1106	8-759-082-58	s	IC TC7W08FU
IC1107	8-759-337-40	s	IC NJM2904V(TE2)
IC1108	8-752-376-32	s	IC CXD2310AR
IC1109	8-752-362-70	s	IC CXD101-106Q
IC1114*2	8-759-656-54	s	IC TC7WH14FK(TE85R)
*1	8-759-209-90	s	IC TC4S71F
IC1201	8-759-669-74	s	IC TL084CPWR-12
IC1202	8-759-488-29	s	IC TC7W66FU (TE12R)
IC1203	6-702-436-01	s	IC AD8061ART-REEL7
IC1207	8-759-337-40	s	IC NJM2904V(TE2)
IC1208	8-752-376-32	s	IC CXD2310AR
IC1209	8-752-362-70	s	IC CXD101-106Q
IC1214*2	8-759-656-54	s	IC TC7WH14FK(TE85R)
*1	8-759-209-90	s	IC TC4S71F
IC1215	8-759-183-53	s	IC TL431CPK-E2
IC1216	8-759-183-53	s	IC TL431CPK-E2
IC1217	8-759-183-53	s	IC TL431CPK-E2
IC1301	8-752-358-08	s	IC CXD2221Q
IC1303	8-759-082-60	s	IC TC7S66FU
IC1304	8-759-973-82	s	IC TLC549IPS
IC1305	8-759-381-47	s	IC AD7524JR
IC1306	8-759-669-74	s	IC TL084CPWR-12
IC1307	6-701-524-01	s	IC SN74LS221DBR
IC1308*2	6-704-406-01	s	IC LM1881MX/NOPB
IC1309	6-701-524-01	s	IC SN74LS221DBR
IC1310	8-759-196-97	s	IC TC7SH32FU (TE85R)
IC1311	8-759-196-97	s	IC TC7SH32FU (TE85R)
IC1312*2	deleted		
*1	8-759-196-96	s	IC TC7SH08FU (TE85R)
IC1402	8-759-669-74	s	IC TL084CPWR-12
IC1403*2	8-759-196-97	s	IC TC7SH32FU (TE85R)
IC1404	6-701-524-01	s	IC SN74LS221DBR
IC1405	8-759-980-44	s	IC TL712CPS
IC1406	8-759-453-97	s	IC TC7SET08FU-TE85R
IC1407	8-759-523-03	s	IC TC74HC4066AFT(EL)
IC1408	8-759-242-78	s	IC TC7W02F
IC1409	8-759-669-74	s	IC TL084CPWR-12
IC1410	8-759-196-93	s	IC TC7SH00FU-TE85R
IC1411	8-759-196-93	s	IC TC7SH00FU-TE85R
IC1413	8-759-669-74	s	IC TL084CPWR-12
IC1501	8-752-358-08	s	IC CXD2221Q
IC1502	8-759-669-74	s	IC TL084CPWR-12
IC1503	8-759-082-60	s	IC TC7S66FU
IC1504	8-759-973-82	s	IC TLC549IPS
IC1505	8-759-381-47	s	IC AD7524JR
IC1506	8-759-669-74	s	IC TL084CPWR-12
IC1510	8-759-196-93	s	IC TC7SH00FU-TE85R
IC1511	8-759-196-93	s	IC TC7SH00FU-TE85R
IC1603	8-759-338-95	s	IC NJM2903V (TE2)
IC1606	8-759-523-03	s	IC TC74HC4066AFT(EL)
IC1608	8-759-980-44	s	IC TL712CPS
IC1609	6-701-524-01	s	IC SN74LS221DBR
IC1610	8-759-453-97	s	IC TC7SET08FU-TE85R
IC1611	8-759-242-78	s	IC TC7W02F
IC1612	8-759-669-74	s	IC TL084CPWR-12
IC1614	8-759-524-19	s	IC TC74VHC164FT(EL)
IC1701	8-759-196-97	s	IC TC7SH32FU (TE85R)

(DM-123/P BOARD [SUFFIX 15-])

Ref. No. or Q'ty	Part No.	SP	Description
IC1702	8-759-194-81	s	IC CXD8395AQ
IC1703	8-759-194-81	s	IC CXD8395AQ
IC1704	8-752-359-55	s	IC CXK48324R
IC1705	8-752-359-55	s	IC CXK48324R
IC1706	8-759-656-54	s	IC TC7WH14FK(TE85R)
IC1707	8-759-523-94	s	IC TC74VHC32FT(EL)
IC1708	8-752-341-32	s	IC CXD2209Q
IC1709	8-759-524-22	s	IC TC74VHC175FT(EL)
IC1710	8-759-523-95	s	IC TC74VHC74FT(EL)
IC1711	8-759-524-18	s	IC TC74VHC163FT(EL)
IC1712	8-752-341-32	s	IC CXD2209Q
IC1713	8-752-341-32	s	IC CXD2209Q
IC1714	8-759-399-52	s	IC CXD8935BQ
IC1715	8-759-656-54	s	IC TC7WH14FK(TE85R)
IC1716	8-759-524-10	s	IC TC74VHC157FT (EL)
IC1717	8-759-196-93	s	IC TC7SH00FU-TE85R
IC1718	8-759-564-49	s	IC TC7W53FU-TE12R
IC1800	8-759-453-97	s	IC TC7SET08FU-TE85R
IC1802	8-759-490-41	s	IC TC74VHCT541AFT(EL)
IC1803	8-759-453-97	s	IC TC7SET08FU-TE85R
IC1804	8-759-523-84	s	IC TC74VHC14FT (EL)
IC1805	8-759-468-72	s	IC AK6420AM (E2)
IC1806	8-759-453-97	s	IC TC7SET08FU-TE85R
IC1807	8-759-447-77	s	IC TC7WH74FU (TE12R)
IC1809	8-759-702-08	s	IC NJM360M
IC1810 *P	8-759-392-01	s	IC TC7SH86FU (TE85R)
IC1814	8-759-669-75	s	IC TLC2932IPWR
IC1815	8-759-549-15	s	IC SN74LV245APWR
IC1816	8-759-549-15	s	IC SN74LV245APWR
IC1818	8-759-082-60	s	IC TC7S66FU
IC1819	8-759-327-01	s	IC NJM062V-TE2
IC1820	8-759-338-95	s	IC NJM2903V (TE2)
IC1821	8-759-531-92	s	IC TC7WH04FU(TE12R)
IC1822	8-759-453-97	s	IC TC7SET08FU-TE85R
IC1823	8-759-523-97	s	IC TC74VHC123AFT(EL)
IC1824	8-752-356-05	s	IC CXD206-104Q
IC1825	8-759-549-15	s	IC SN74LV245APWR
IC1826	8-759-549-15	s	IC SN74LV245APWR
IC1827	8-759-327-01	s	IC NJM062V-TE2
IC1828	8-759-523-97	s	IC TC74VHC123AFT(EL)
IC1829	8-752-360-90	s	IC CXD303-101Q
IC1830	8-752-355-09	s	IC CXD104-114Q
IC1833	6-701-524-01	s	IC SN74LS221DBR
IC1834	8-759-337-40	s	IC NJM2904V(TE2)
IC1835	8-759-196-93	s	IC TC7SH00FU-TE85R
IC1838	8-759-453-97	s	IC TC7SET08FU-TE85R
IC1839	8-759-523-02	s	IC TC74HC4053AFT(EL)
IC1840 *3	8-759-196-97	s	IC TC7SH32FU (TE85R)
IC1841 *3	8-759-453-97	s	IC TC7SET08FU-TE85R
L102	1-412-951-11	s	INDUCTOR 10UH (2520)
L103	1-412-939-11	s	INDUCTOR 1.0UH (2520)
L104	1-412-953-11	s	INDUCTOR 15UH (2520)
L105	1-412-942-11	s	INDUCTOR 1.8UH (2518)
L106	1-412-950-11	s	INDUCTOR 8.2UH (2518)
L107 *2	1-400-521-11	s	INDUCTOR 5.6UH
*1	1-410-378-11	s	INDUCTOR,CHIP 5.6UH (3225)
L108 *N	1-412-949-21	s	INDUCTOR 6.8UH (2520)
*P	1-412-951-11	s	INDUCTOR 10UH (2520)
L109 *2	1-400-521-11	s	INDUCTOR 5.6UH
*1	1-410-378-11	s	INDUCTOR,CHIP 5.6UH (3225)

(DM-123/P BOARD [SUFFIX 15-])

Ref. No. or Q'ty	Part No.	SP	Description
L110 *N	1-412-949-21	s	INDUCTOR 6.8UH (2520)
*P	1-412-951-11	s	INDUCTOR 10UH (2520)
L111	1-412-950-11	s	INDUCTOR 8.2UH (2518)
L112	1-412-951-11	s	INDUCTOR 10UH (2520)
L113	1-412-950-11	s	INDUCTOR 8.2UH (2518)
L114 *N	1-412-947-11	s	INDUCTOR 4.7UH (2520)
*P	1-412-945-11	s	INDUCTOR 3.3UH (2520)
L115	1-412-950-11	s	INDUCTOR 8.2UH (2518)
L116 *2	1-400-521-11	s	INDUCTOR 5.6UH
*1	1-410-378-11	s	INDUCTOR,CHIP 5.6UH (3225)
L117	1-414-398-11	s	INDUCTOR (SMD) 10UH
L118	1-414-398-11	s	INDUCTOR (SMD) 10UH
L119	1-414-398-11	s	INDUCTOR (SMD) 10UH
L120	1-414-398-11	s	INDUCTOR (SMD) 10UH
L121	1-412-941-11	s	INDUCTOR 1.5UH (2520)
L122	1-412-941-11	s	INDUCTOR 1.5UH (2520)
L123 *2	1-400-521-11	s	INDUCTOR 5.6UH
*1	1-410-378-11	s	INDUCTOR,CHIP 5.6UH (3225)
L124	1-412-952-11	s	INDUCTOR 12UH (2520)
L125 *2	1-400-545-11	s	INDUCTOR 560UH
*1	1-412-203-11	s	MICRO INDUCTOR 560UH
L126	1-412-943-11	s	INDUCTOR 2.2UH (2520)
L127	1-412-941-11	s	INDUCTOR 1.5UH (2520)
L128	1-412-947-11	s	INDUCTOR 4.7UH (2520)
L129	1-412-946-11	s	INDUCTOR 3.9UH (2520)
L130	1-412-959-11	s	INDUCTOR 47UH (2520)
L132 *2	1-400-521-11	s	INDUCTOR 5.6UH
*1	1-410-378-11	s	INDUCTOR,CHIP 5.6UH (3225)
L301	1-414-398-11	s	INDUCTOR (SMD) 10UH
L302	1-412-949-21	s	INDUCTOR 6.8UH (2520)
L303	1-412-950-11	s	INDUCTOR 8.2UH (2518)
L304	1-414-398-11	s	INDUCTOR (SMD) 10UH
L305	1-412-949-21	s	INDUCTOR 6.8UH (2520)
L306	1-412-950-11	s	INDUCTOR 8.2UH (2518)
L307 *2	1-400-544-11	s	INDUCTOR 470UH
*1	1-412-282-41	s	INDUCTOR,CHIP 470UH (3225)
L308 *2	1-400-544-11	s	INDUCTOR 470UH
*1	1-412-282-41	s	INDUCTOR,CHIP 470UH (3225)
L309	1-412-950-11	s	INDUCTOR 8.2UH (2518)
L310	1-412-950-11	s	INDUCTOR 8.2UH (2518)
L311	1-414-398-11	s	INDUCTOR (SMD) 10UH
L312	1-414-398-11	s	INDUCTOR (SMD) 10UH
L313	1-412-950-11	s	INDUCTOR 8.2UH (2518)
L314	1-412-950-11	s	INDUCTOR 8.2UH (2518)
L315	1-412-941-11	s	INDUCTOR 1.5UH (2520)
L316	1-412-941-11	s	INDUCTOR 1.5UH (2520)
L317	1-414-398-11	s	INDUCTOR (SMD) 10UH
L318	1-412-953-11	s	INDUCTOR 15UH (2520)
L319 *2	1-400-545-11	s	INDUCTOR 560UH
*1	1-412-203-11	s	MICRO INDUCTOR 560UH
L502	1-414-400-11	s	INDUCTOR, 22UH
L503 *2	1-400-544-11	s	INDUCTOR 470UH
*1	1-412-282-41	s	INDUCTOR,CHIP 470UH (3225)
L504 *2	1-400-548-11	s	INDUCTOR 1000UH
*1	1-412-206-11	s	MICRO INDUCTOR 1MMH
L505 *3	1-414-406-11	s	INDUCTOR (SMD) 220UH
L506 *2	deleted		
*1	1-410-389-31	s	INDUCTOR,CHIP 47UH (3225)
L511	1-414-398-11	s	INDUCTOR (SMD) 10UH
L512	1-414-398-11	s	INDUCTOR (SMD) 10UH
L515	1-414-398-11	s	INDUCTOR (SMD) 10UH

(DM-123/P BOARD [SUFFIX 15-])

Ref. No. or Q'ty	Part No.	SP	Description
L516	*2 1-412-961-11	s	INDUCTOR (SMALL TYPE)68UH
	*1 1-412-193-11	s	MICRO INDUCTOR 68UH
L701	1-414-400-11	s	INDUCTOR, 22UH
L702	*3 1-414-406-11	s	INDUCTOR (SMD) 220UH
L703	1-410-389-31	s	INDUCTOR,CHIP 47UH (3225)
L706	1-414-398-11	s	INDUCTOR (SMD) 10UH
L707	1-414-398-11	s	INDUCTOR (SMD) 10UH
L708	1-414-398-11	s	INDUCTOR (SMD) 10UH
L903	1-414-400-11	s	INDUCTOR, 22UH
L904	1-414-400-11	s	INDUCTOR, 22UH
L905	1-414-400-11	s	INDUCTOR, 22UH
L906	*3 1-416-345-11	s	COIL, CHOKE 22UH
L908	*3 1-416-758-11	s	COIL, CHOKE 22UH
	*1 1-416-344-11	s	COIL, CHOKE 10UH
L909	*3 1-416-345-11	s	COIL, CHOKE 22UH
	*1 1-416-344-11	s	COIL, CHOKE 10UH
L910	1-416-344-11	s	COIL, CHOKE 10UH
L911	1-416-344-11	s	COIL, CHOKE 10UH
L912	1-416-344-11	s	COIL, CHOKE 10UH
L913	1-416-344-11	s	COIL, CHOKE 10UH
L914	1-416-344-11	s	COIL, CHOKE 10UH
L915	1-416-344-11	s	COIL, CHOKE 10UH
L1103	*2 1-400-538-11	s	INDUCTOR 150UH
	*1 1-412-196-11	s	MICRO INDUCTOR 150UH
L1104	1-414-400-11	s	INDUCTOR, 22UH
L1105	1-414-400-11	s	INDUCTOR, 22UH
L1106	1-414-400-11	s	INDUCTOR, 22UH
L1202	*2 1-400-538-11	s	INDUCTOR 150UH
	*1 1-412-196-11	s	MICRO INDUCTOR 150UH
L1205	1-414-400-11	s	INDUCTOR, 22UH
L1206	1-414-400-11	s	INDUCTOR, 22UH
L1207	1-414-400-11	s	INDUCTOR, 22UH
L1301	1-410-389-31	s	INDUCTOR,CHIP 47UH (3225)
L1302	1-410-389-31	s	INDUCTOR,CHIP 47UH (3225)
L1303	*2 1-400-542-11	s	INDUCTOR 330UH
	*1 1-412-280-31	s	INDUCTOR,CHIP 330UH (3225)
L1304	*2 1-400-546-11	s	INDUCTOR 680UH
	*1 1-412-204-11	s	MICRO INDUCTOR 680UH
L1305	1-410-389-31	s	INDUCTOR,CHIP 47UH (3225)
L1310	1-414-400-11	s	INDUCTOR, 22UH
L1401	1-412-961-11	s	INDUCTOR (SMALL TYPE)68UH
L1402	1-410-389-31	s	INDUCTOR,CHIP 47UH (3225)
L1403	1-414-398-11	s	INDUCTOR (SMD) 10UH
L1501	1-410-389-31	s	INDUCTOR,CHIP 47UH (3225)
L1502	1-410-389-31	s	INDUCTOR,CHIP 47UH (3225)
L1503	1-412-963-11	s	INDUCTOR 100UH (2520)
L1504	*2 1-400-540-11	s	INDUCTOR 220UH
	*1 1-410-658-31	s	INDUCTOR,CHIP 220UH (3225)
L1505	1-412-953-11	s	INDUCTOR 15UH (2520)
L1506	1-412-957-11	s	INDUCTOR 33UH (2520)
L1507	1-410-389-31	s	INDUCTOR,CHIP 47UH (3225)
L1601	1-412-958-21	s	INDUCTOR 39UH (2520)
L1602	1-410-389-31	s	INDUCTOR,CHIP 47UH (3225)
L1603	1-414-398-11	s	INDUCTOR (SMD) 10UH
L1610	1-414-400-11	s	INDUCTOR, 22UH
L1701	1-414-400-11	s	INDUCTOR, 22UH
L1702	1-414-400-11	s	INDUCTOR, 22UH
L1803	*N 1-412-960-21	s	INDUCTOR (SMALL TYPE)56UH
	*P 1-412-962-11	s	INDUCTOR 82UH (2520)
L1804	*N 1-412-960-21	s	INDUCTOR (SMALL TYPE)56UH
	*P 1-412-962-11	s	INDUCTOR 82UH (2520)

(DM-123/P BOARD [SUFFIX 15-])

Ref. No. or Q'ty	Part No.	SP	Description
L1805	1-414-400-11	s	INDUCTOR, 22UH
L1807	1-414-400-11	s	INDUCTOR, 22UH
L1808	1-414-400-11	s	INDUCTOR, 22UH
L1809	1-414-398-11	s	INDUCTOR (SMD) 10UH
L1810	1-414-398-11	s	INDUCTOR (SMD) 10UH
LV1401	1-406-745-21	s	COIL, VARIABLE
LV1601	1-406-745-21	s	COIL, VARIABLE
Q101	8-729-117-73	s	TRANSISTOR 2SC4178-F14
Q102	8-729-117-73	s	TRANSISTOR 2SC4178-F14
Q103	8-729-013-37	s	TRANSISTOR 2SC4213-AB-TE85L
Q104	8-729-117-73	s	TRANSISTOR 2SC4178-F14
Q105	8-729-013-37	s	TRANSISTOR 2SC4213-AB-TE85L
Q106	8-729-117-73	s	TRANSISTOR 2SC4178-F14
Q107	8-729-117-73	s	TRANSISTOR 2SC4178-F14
Q108	8-729-928-27	s	TRANSISTOR DTA144EE
Q109	8-729-143-07	s	TRANSISTOR 2SA1610-Y33
Q110	8-729-117-73	s	TRANSISTOR 2SC4178-F14
Q111	8-729-117-73	s	TRANSISTOR 2SC4178-F14
Q112	8-729-117-73	s	TRANSISTOR 2SC4178-F14
Q113	8-729-928-27	s	TRANSISTOR DTA144EE
Q114	8-729-143-07	s	TRANSISTOR 2SA1610-Y33
Q115	8-729-117-73	s	TRANSISTOR 2SC4178-F14
Q116	8-729-928-27	s	TRANSISTOR DTA144EE
Q117	8-729-143-07	s	TRANSISTOR 2SA1610-Y33
Q118	8-729-117-73	s	TRANSISTOR 2SC4178-F14
Q119	8-729-117-73	s	TRANSISTOR 2SC4178-F14
Q120	8-729-117-73	s	TRANSISTOR 2SC4178-F14
Q121	8-729-117-73	s	TRANSISTOR 2SC4178-F14
Q122	8-729-117-73	s	TRANSISTOR 2SC4178-F14
Q123	8-729-143-07	s	TRANSISTOR 2SA1610-Y33
Q124	8-729-143-07	s	TRANSISTOR 2SA1610-Y33
Q125	8-729-117-73	s	TRANSISTOR 2SC4178-F14
Q126	8-729-117-73	s	TRANSISTOR 2SC4178-F14
Q127	8-729-117-73	s	TRANSISTOR 2SC4178-F14
Q128	8-729-117-73	s	TRANSISTOR 2SC4178-F14
Q129	8-729-143-07	s	TRANSISTOR 2SA1610-Y33
Q130	8-729-143-07	s	TRANSISTOR 2SA1610-Y33
Q131	8-729-117-73	s	TRANSISTOR 2SC4178-F14
Q132	8-729-117-73	s	TRANSISTOR 2SC4178-F14
Q133	8-729-117-73	s	TRANSISTOR 2SC4178-F14
Q134	8-729-117-73	s	TRANSISTOR 2SC4178-F14
Q135	8-729-117-32	s	TRANSISTOR 2SC4177
Q136	8-729-117-32	s	TRANSISTOR 2SC4177
Q137	8-729-140-63	s	TRANSISTOR 2SA1611-M5M6
Q138	8-729-117-73	s	TRANSISTOR 2SC4178-F14
Q139	8-729-117-73	s	TRANSISTOR 2SC4178-F14
Q140	8-729-026-56	s	TRANSISTOR FMS2A-T148
Q141	8-729-117-73	s	TRANSISTOR 2SC4178-F14
Q142	8-729-117-73	s	TRANSISTOR 2SC4178-F14
Q143	8-729-117-73	s	TRANSISTOR 2SC4178-F14
Q144	8-729-013-37	s	TRANSISTOR 2SC4213-AB-TE85L
Q145	8-729-013-37	s	TRANSISTOR 2SC4213-AB-TE85L
Q146	8-729-013-37	s	TRANSISTOR 2SC4213-AB-TE85L
Q147	8-729-013-37	s	TRANSISTOR 2SC4213-AB-TE85L
Q148	8-729-117-73	s	TRANSISTOR 2SC4178-F14
Q301	8-729-117-73	s	TRANSISTOR 2SC4178-F14
Q302	8-729-117-73	s	TRANSISTOR 2SC4178-F14
Q303	8-729-117-73	s	TRANSISTOR 2SC4178-F14

(DM-123/P BOARD [SUFFIX 15-])

Ref. No. or Q'ty	Part No.	SP	Description
Q304	8-729-117-73	s	TRANSISTOR 2SC4178-F14
Q305	8-729-117-73	s	TRANSISTOR 2SC4178-F14
Q306	8-729-117-73	s	TRANSISTOR 2SC4178-F14
Q307	8-729-117-73	s	TRANSISTOR 2SC4178-F14
Q308	8-729-117-73	s	TRANSISTOR 2SC4178-F14
Q309	8-729-117-73	s	TRANSISTOR 2SC4178-F14
Q310	8-729-143-07	s	TRANSISTOR 2SA1610-Y33
Q311	8-729-143-07	s	TRANSISTOR 2SA1610-Y33
Q312	8-729-117-73	s	TRANSISTOR 2SC4178-F14
Q313	8-729-117-73	s	TRANSISTOR 2SC4178-F14
Q314	8-729-143-07	s	TRANSISTOR 2SA1610-Y33
Q315	8-729-143-07	s	TRANSISTOR 2SA1610-Y33
Q316	8-729-117-73	s	TRANSISTOR 2SC4178-F14
Q317	8-729-117-73	s	TRANSISTOR 2SC4178-F14
Q318	8-729-117-73	s	TRANSISTOR 2SC4178-F14
Q319	8-729-117-73	s	TRANSISTOR 2SC4178-F14
Q320	8-729-117-73	s	TRANSISTOR 2SC4178-F14
Q321	8-729-117-32	s	TRANSISTOR 2SC4177
Q322	8-729-140-63	s	TRANSISTOR 2SA1611-M5M6
Q323	8-729-026-56	s	TRANSISTOR FMS2A-T148
Q324	8-729-117-73	s	TRANSISTOR 2SC4178-F14
Q325	8-729-117-73	s	TRANSISTOR 2SC4178-F14
Q501	8-729-928-81	s	TRANSISTOR DTC144EE
Q502	8-729-928-81	s	TRANSISTOR DTC144EE
Q503	8-729-928-27	s	TRANSISTOR DTA144EE
Q504	8-729-928-27	s	TRANSISTOR DTA144EE
Q505 *P	8-729-026-58	s	TRANSISTOR FMY3A-T148
Q506	8-729-026-58	s	TRANSISTOR FMY3A-T148
Q507	8-729-026-58	s	TRANSISTOR FMY3A-T148
Q508 *P	8-729-026-58	s	TRANSISTOR FMY3A-T148
Q509	8-729-026-58	s	TRANSISTOR FMY3A-T148
Q510	8-729-026-58	s	TRANSISTOR FMY3A-T148
Q512	8-729-117-73	s	TRANSISTOR 2SC4178-F14
Q513	8-729-928-27	s	TRANSISTOR DTA144EE
Q514	8-729-928-81	s	TRANSISTOR DTC144EE
Q515	8-729-117-32	s	TRANSISTOR 2SC4177
Q516	8-729-117-32	s	TRANSISTOR 2SC4177
Q517	8-729-117-32	s	TRANSISTOR 2SC4177
Q518	8-729-117-32	s	TRANSISTOR 2SC4177
Q520	8-729-907-27	s	TRANSISTOR IMX1T110
Q702 *P	8-729-140-63	s	TRANSISTOR 2SA1611-M5M6
Q703 *P	8-729-117-32	s	TRANSISTOR 2SC4177
Q704	8-729-140-63	s	TRANSISTOR 2SA1611-M5M6
Q705	8-729-117-32	s	TRANSISTOR 2SC4177
Q706	8-729-026-56	s	TRANSISTOR FMS2A-T148
Q707	8-729-907-27	s	TRANSISTOR IMX1T110
Q710	8-729-117-32	s	TRANSISTOR 2SC4177
Q711	8-729-117-73	s	TRANSISTOR 2SC4178-F14
Q712	8-729-928-27	s	TRANSISTOR DTA144EE
Q713	8-729-928-81	s	TRANSISTOR DTC144EE
Q714	8-729-117-32	s	TRANSISTOR 2SC4177
Q715	8-729-117-32	s	TRANSISTOR 2SC4177
Q717	8-729-907-27	s	TRANSISTOR IMX1T110
Q903	8-729-928-81	s	TRANSISTOR DTC144EE
Q920	8-729-928-81	s	TRANSISTOR DTC144EE
Q1103	8-729-140-63	s	TRANSISTOR 2SA1611-M5M6
Q1108	8-729-928-81	s	TRANSISTOR DTC144EE
Q1111	8-729-140-63	s	TRANSISTOR 2SA1611-M5M6
Q1203	8-729-140-63	s	TRANSISTOR 2SA1611-M5M6

(DM-123/P BOARD [SUFFIX 15-])

Ref. No. or Q'ty	Part No.	SP	Description
Q1210	8-729-140-63	s	TRANSISTOR 2SA1611-M5M6
Q1301	8-729-907-27	s	TRANSISTOR IMX1T110
Q1302	8-729-117-32	s	TRANSISTOR 2SC4177
Q1401	8-729-117-32	s	TRANSISTOR 2SC4177
Q1402 *2	8-729-928-27	s	TRANSISTOR DTA144EE
Q1403	8-729-026-56	s	TRANSISTOR FMS2A-T148
Q1404 *2	8-729-928-27	s	TRANSISTOR DTA144EE
Q1405	8-729-140-47	s	TRANSISTOR 2SC3735-L-B35
Q1406	8-729-140-63	s	TRANSISTOR 2SA1611-M5M6
Q1407	8-729-117-32	s	TRANSISTOR 2SC4177
Q1408	6-550-139-01	s	TRANSISTOR IMZ1A-T108
Q1409	8-729-117-32	s	TRANSISTOR 2SC4177
Q1410	8-729-907-27	s	TRANSISTOR IMX1T110
Q1501	8-729-907-27	s	TRANSISTOR IMX1T110
Q1502	8-729-117-32	s	TRANSISTOR 2SC4177
Q1601	8-729-117-32	s	TRANSISTOR 2SC4177
Q1602	8-729-026-56	s	TRANSISTOR FMS2A-T148
Q1603	6-550-139-01	s	TRANSISTOR IMZ1A-T108
Q1604	8-729-140-47	s	TRANSISTOR 2SC3735-L-B35
Q1605	8-729-140-63	s	TRANSISTOR 2SA1611-M5M6
Q1606	8-729-117-32	s	TRANSISTOR 2SC4177
Q1607	8-729-117-32	s	TRANSISTOR 2SC4177
Q1608	8-729-907-27	s	TRANSISTOR IMX1T110
Q1801	8-729-117-32	s	TRANSISTOR 2SC4177
Q1802	8-729-928-81	s	TRANSISTOR DTC144EE
Q1803	8-729-928-81	s	TRANSISTOR DTC144EE
R101	1-218-871-11	s	RESISTOR,CHIP 10K 1/10W (1608)
R102	1-218-871-11	s	RESISTOR,CHIP 10K 1/10W (1608)
R103	1-218-847-11	s	RESISTOR, CHIP 1K 1/10W (1608)
R104	1-218-847-11	s	RESISTOR, CHIP 1K 1/10W (1608)
R105	1-218-847-11	s	RESISTOR, CHIP 1K 1/10W (1608)
R106	1-218-826-11	s	RESISTOR,CHIP 130 1/10W (1608)
R107	1-218-825-11	s	RESISTOR,CHIP 120 1/10W (1608)
R108	1-211-990-11	s	RESISTOR,CHIP 75 1/10W (1608)
R109	1-218-823-11	s	RESISTOR,CHIP 100 1/10W (1608)
R111	1-218-859-11	s	RESISTOR,CHIP 3.3K 1/10W(1608)
R112	1-218-823-11	s	RESISTOR,CHIP 100 1/10W (1608)
R113	1-218-863-11	s	RESISTOR,CHIP 4.7K 1/10W(1608)
R116	1-218-847-11	s	RESISTOR, CHIP 1K 1/10W (1608)
R117	1-218-847-11	s	RESISTOR, CHIP 1K 1/10W (1608)
R120	1-218-847-11	s	RESISTOR, CHIP 1K 1/10W (1608)
R121	1-218-831-11	s	RESISTOR, CHIP 220 1/10W(1608)
R122	1-218-863-11	s	RESISTOR,CHIP 4.7K 1/10W(1608)
R123	1-218-847-11	s	RESISTOR, CHIP 1K 1/10W (1608)
R125	1-211-977-11	s	RESISTOR,CHIP 22 1/10W (1608)
R126	1-218-847-11	s	RESISTOR, CHIP 1K 1/10W (1608)
R127	1-218-847-11	s	RESISTOR, CHIP 1K 1/10W (1608)
R128	1-218-853-11	s	RESISTOR,CHIP 1.8K 1/10W(1608)
R129	1-218-847-11	s	RESISTOR, CHIP 1K 1/10W (1608)
R130	1-218-849-11	s	RESISTOR,CHIP 1.2K 1/10W(1608)
R131	1-218-855-11	s	RESISTOR,CHIP 2.2K 1/10W(1608)
R132	1-218-835-11	s	RESISTOR,CHIP 330 1/10W (1608)
R133	1-218-835-11	s	RESISTOR,CHIP 330 1/10W (1608)
R134	1-218-834-11	s	RESISTOR,CHIP 300 1/10W (1608)
R135	1-218-871-11	s	RESISTOR,CHIP 10K 1/10W (1608)
R136	1-218-863-11	s	RESISTOR,CHIP 4.7K 1/10W(1608)
R137	1-218-863-11	s	RESISTOR,CHIP 4.7K 1/10W(1608)
R138	1-218-871-11	s	RESISTOR,CHIP 10K 1/10W (1608)

(DM-123/P BOARD [SUFFIX 15-])

Ref. No. or Q'ty	Part No.	SP	Description
R139	1-218-823-11	s	RESISTOR,CHIP 100 1/10W (1608)
R140	1-218-834-11	s	RESISTOR,CHIP 300 1/10W (1608)
R141	1-218-863-11	s	RESISTOR,CHIP 4.7K 1/10W(1608)
R142	1-218-871-11	s	RESISTOR,CHIP 10K 1/10W (1608)
R143	1-218-823-11	s	RESISTOR,CHIP 100 1/10W (1608)
R144	1-218-871-11	s	RESISTOR,CHIP 10K 1/10W (1608)
R145	1-218-855-11	s	RESISTOR,CHIP 2.2K 1/10W(1608)
R146	1-216-864-11	s	CONDUCTOR, CHIP (1608)
R147	1-218-863-11	s	RESISTOR,CHIP 4.7K 1/10W(1608)
R148	1-218-823-11	s	RESISTOR,CHIP 100 1/10W (1608)
R149	1-218-823-11	s	RESISTOR,CHIP 100 1/10W (1608)
R150	1-218-839-11	s	RESISTOR,CHIP 470 1/10W (1608)
R151	1-218-823-11	s	RESISTOR,CHIP 100 1/10W (1608)
R153	1-218-847-11	s	RESISTOR, CHIP 1K 1/10W (1608)
R154	1-218-871-11	s	RESISTOR,CHIP 10K 1/10W (1608)
R155	1-218-871-11	s	RESISTOR,CHIP 10K 1/10W (1608)
R156	1-218-863-11	s	RESISTOR,CHIP 4.7K 1/10W(1608)
R157	1-218-823-11	s	RESISTOR,CHIP 100 1/10W (1608)
R158	1-218-859-11	s	RESISTOR,CHIP 3.3K 1/10W(1608)
R159	1-218-859-11	s	RESISTOR,CHIP 3.3K 1/10W(1608)
R160	1-218-834-11	s	RESISTOR,CHIP 300 1/10W (1608)
R161 *N	1-218-834-11	s	RESISTOR,CHIP 300 1/10W (1608)
*P	1-218-835-11	s	RESISTOR,CHIP 330 1/10W (1608)
R162	1-218-871-11	s	RESISTOR,CHIP 10K 1/10W (1608)
R163	1-218-823-11	s	RESISTOR,CHIP 100 1/10W (1608)
R164	1-218-871-11	s	RESISTOR,CHIP 10K 1/10W (1608)
R165	1-218-823-11	s	RESISTOR,CHIP 100 1/10W (1608)
R166	1-218-863-11	s	RESISTOR,CHIP 4.7K 1/10W(1608)
R167	1-218-823-11	s	RESISTOR,CHIP 100 1/10W (1608)
R168	1-218-834-11	s	RESISTOR,CHIP 300 1/10W (1608)
R169	1-218-823-11	s	RESISTOR,CHIP 100 1/10W (1608)
R170 *N	1-218-834-11	s	RESISTOR,CHIP 300 1/10W (1608)
*P	1-218-835-11	s	RESISTOR,CHIP 330 1/10W (1608)
R171	1-218-847-11	s	RESISTOR, CHIP 1K 1/10W (1608)
R172	1-218-863-11	s	RESISTOR,CHIP 4.7K 1/10W(1608)
R173	1-218-863-11	s	RESISTOR,CHIP 4.7K 1/10W(1608)
R174	1-218-834-11	s	RESISTOR,CHIP 300 1/10W (1608)
R175	1-218-871-11	s	RESISTOR,CHIP 10K 1/10W (1608)
R176	1-218-823-11	s	RESISTOR,CHIP 100 1/10W (1608)
R177	1-218-823-11	s	RESISTOR,CHIP 100 1/10W (1608)
R178	1-218-831-11	s	RESISTOR, CHIP 220 1/10W(1608)
R179	1-218-840-11	s	RESISTOR,CHIP 510 1/10W (1608)
R180	1-218-838-11	s	RESISTOR,CHIP 430 1/10W (1608)
R181	1-218-839-11	s	RESISTOR,CHIP 470 1/10W (1608)
R182	1-218-831-11	s	RESISTOR, CHIP 220 1/10W(1608)
R183	1-218-840-11	s	RESISTOR,CHIP 510 1/10W (1608)
R184	1-218-838-11	s	RESISTOR,CHIP 430 1/10W (1608)
R185	1-218-839-11	s	RESISTOR,CHIP 470 1/10W (1608)
R186	1-218-831-11	s	RESISTOR, CHIP 220 1/10W(1608)
R187	1-218-847-11	s	RESISTOR, CHIP 1K 1/10W (1608)
R188	1-218-831-11	s	RESISTOR, CHIP 220 1/10W(1608)
R189	1-218-823-11	s	RESISTOR,CHIP 100 1/10W (1608)
R190	1-218-823-11	s	RESISTOR,CHIP 100 1/10W (1608)
R191	1-218-863-11	s	RESISTOR,CHIP 4.7K 1/10W(1608)
R192	1-218-823-11	s	RESISTOR,CHIP 100 1/10W (1608)
R193	1-218-863-11	s	RESISTOR,CHIP 4.7K 1/10W(1608)
R194	1-218-823-11	s	RESISTOR,CHIP 100 1/10W (1608)
R195	1-218-823-11	s	RESISTOR,CHIP 100 1/10W (1608)
R196	1-218-831-11	s	RESISTOR, CHIP 220 1/10W(1608)

(DM-123/P BOARD [SUFFIX 15-])

Ref. No. or Q'ty	Part No.	SP	Description
R197	1-218-840-11	s	RESISTOR,CHIP 510 1/10W (1608)
R198	1-218-837-11	s	RESISTOR,CHIP 390 1/10W (1608)
R199	1-218-839-11	s	RESISTOR,CHIP 470 1/10W (1608)
R200	1-218-831-11	s	RESISTOR, CHIP 220 1/10W(1608)
R201	1-218-840-11	s	RESISTOR,CHIP 510 1/10W (1608)
R202	1-218-836-11	s	RESISTOR,CHIP 360 1/10W (1608)
R203	1-218-839-11	s	RESISTOR,CHIP 470 1/10W (1608)
R204	1-218-831-11	s	RESISTOR, CHIP 220 1/10W(1608)
R205	1-218-831-11	s	RESISTOR, CHIP 220 1/10W(1608)
R206	1-218-855-11	s	RESISTOR,CHIP 2.2K 1/10W(1608)
R207	1-218-823-11	s	RESISTOR,CHIP 100 1/10W (1608)
R208	1-218-823-11	s	RESISTOR,CHIP 100 1/10W (1608)
R209	1-218-863-11	s	RESISTOR,CHIP 4.7K 1/10W(1608)
R210	1-218-863-11	s	RESISTOR,CHIP 4.7K 1/10W(1608)
R211	1-218-871-11	s	RESISTOR,CHIP 10K 1/10W (1608)
R212	1-218-871-11	s	RESISTOR,CHIP 10K 1/10W (1608)
R213	1-218-831-11	s	RESISTOR, CHIP 220 1/10W(1608)
R214	1-218-835-11	s	RESISTOR,CHIP 330 1/10W (1608)
R215	1-218-835-11	s	RESISTOR,CHIP 330 1/10W (1608)
R216	1-218-863-11	s	RESISTOR,CHIP 4.7K 1/10W(1608)
R217	1-218-863-11	s	RESISTOR,CHIP 4.7K 1/10W(1608)
R218	1-218-847-11	s	RESISTOR, CHIP 1K 1/10W (1608)
R219	1-218-847-11	s	RESISTOR, CHIP 1K 1/10W (1608)
R220	1-211-977-11	s	RESISTOR,CHIP 22 1/10W (1608)
R221	1-211-977-11	s	RESISTOR,CHIP 22 1/10W (1608)
R222	1-218-855-11	s	RESISTOR,CHIP 2.2K 1/10W(1608)
R223	1-218-835-11	s	RESISTOR,CHIP 330 1/10W (1608)
R224	1-218-840-11	s	RESISTOR,CHIP 510 1/10W (1608)
R225	1-218-840-11	s	RESISTOR,CHIP 510 1/10W (1608)
R226	1-218-867-11	s	RESISTOR,CHIP 6.8K 1/10W(1608)
R227	1-218-873-11	s	RESISTOR,CHIP 12K 1/10W (1608)
R228	1-218-835-11	s	RESISTOR,CHIP 330 1/10W (1608)
R229	1-218-835-11	s	RESISTOR,CHIP 330 1/10W (1608)
R230	1-218-863-11	s	RESISTOR,CHIP 4.7K 1/10W(1608)
R231	1-218-863-11	s	RESISTOR,CHIP 4.7K 1/10W(1608)
R233	1-218-873-11	s	RESISTOR,CHIP 12K 1/10W (1608)
R234	1-218-871-11	s	RESISTOR,CHIP 10K 1/10W (1608)
R235	1-218-841-11	s	RESISTOR,CHIP 560 1/10W (1608)
R236	1-218-847-11	s	RESISTOR, CHIP 1K 1/10W (1608)
R237	1-218-855-11	s	RESISTOR,CHIP 2.2K 1/10W(1608)
R238	1-218-839-11	s	RESISTOR,CHIP 470 1/10W (1608)
R239	1-218-868-11	s	RESISTOR,CHIP 7.5K 1/10W(1608)
R240	1-218-848-11	s	RESISTOR,CHIP 1.1K 1/10W(1608)
R241	1-218-847-11	s	RESISTOR, CHIP 1K 1/10W (1608)
R243	1-218-863-11	s	RESISTOR,CHIP 4.7K 1/10W(1608)
R244	1-218-847-11	s	RESISTOR, CHIP 1K 1/10W (1608)
R245	1-218-849-11	s	RESISTOR,CHIP 1.2K 1/10W(1608)
R246	1-218-863-11	s	RESISTOR,CHIP 4.7K 1/10W(1608)
R247	1-211-985-11	s	RESISTOR,CHIP 47 1/10W (1608)
R248	1-211-985-11	s	RESISTOR,CHIP 47 1/10W (1608)
R249	1-218-855-11	s	RESISTOR,CHIP 2.2K 1/10W(1608)
R250	1-218-855-11	s	RESISTOR,CHIP 2.2K 1/10W(1608)
R251	1-218-855-11	s	RESISTOR,CHIP 2.2K 1/10W(1608)
R252	1-218-847-11	s	RESISTOR, CHIP 1K 1/10W (1608)
R253	1-218-887-11	s	RESISTOR,CHIP 47K 1/10W (1608)
R254	1-218-871-11	s	RESISTOR,CHIP 10K 1/10W (1608)
R255	1-218-879-11	s	RESISTOR,CHIP 22K 1/10W (1608)
R256	1-218-855-11	s	RESISTOR,CHIP 2.2K 1/10W(1608)
R257	1-218-879-11	s	RESISTOR,CHIP 22K 1/10W (1608)

(DM-123/P BOARD [SUFFIX 15-])

Ref. No. or Q'ty	Part No.	SP	Description
R258	1-218-871-11	s	RESISTOR,CHIP 10K 1/10W (1608)
R260	1-211-977-11	s	RESISTOR,CHIP 22 1/10W (1608)
R261	1-218-847-11	s	RESISTOR, CHIP 1K 1/10W (1608)
R262	1-218-879-11	s	RESISTOR,CHIP 22K 1/10W (1608)
R263	1-211-977-11	s	RESISTOR,CHIP 22 1/10W (1608)
R264	1-218-871-11	s	RESISTOR,CHIP 10K 1/10W (1608)
R265	1-218-887-11	s	RESISTOR,CHIP 47K 1/10W (1608)
R266	1-218-880-11	s	RESISTOR,CHIP 24K 1/10W (1608)
R267	1-218-855-11	s	RESISTOR,CHIP 2.2K 1/10W(1608)
R268	1-218-887-11	s	RESISTOR,CHIP 47K 1/10W (1608)
R269	1-218-871-11	s	RESISTOR,CHIP 10K 1/10W (1608)
R270	1-218-847-11	s	RESISTOR, CHIP 1K 1/10W (1608)
R271	1-218-823-11	s	RESISTOR,CHIP 100 1/10W (1608)
R272	1-218-847-11	s	RESISTOR, CHIP 1K 1/10W (1608)
R276	1-218-871-11	s	RESISTOR,CHIP 10K 1/10W (1608)
R277	1-218-871-11	s	RESISTOR,CHIP 10K 1/10W (1608)
R278	1-218-871-11	s	RESISTOR,CHIP 10K 1/10W (1608)
R279	1-218-871-11	s	RESISTOR,CHIP 10K 1/10W (1608)
R280	1-218-871-11	s	RESISTOR,CHIP 10K 1/10W (1608)
R282	1-218-833-11	s	RESISTOR,CHIP 270 1/10W (1608)
R283	1-218-833-11	s	RESISTOR,CHIP 270 1/10W (1608)
R301	1-218-826-11	s	RESISTOR,CHIP 130 1/10W (1608)
R302	1-218-825-11	s	RESISTOR,CHIP 120 1/10W (1608)
R303	1-211-990-11	s	RESISTOR,CHIP 75 1/10W (1608)
R304	1-211-981-11	s	RESISTOR,CHIP 33 1/10W (1608)
R305	1-218-855-11	s	RESISTOR,CHIP 2.2K 1/10W(1608)
R306	1-211-977-11	s	RESISTOR,CHIP 22 1/10W (1608)
R308	1-216-857-11	s	RESISTOR,CHIP 1M 1/10W(1608)
R309	1-218-871-11	s	RESISTOR,CHIP 10K 1/10W (1608)
R312	1-216-857-11	s	RESISTOR,CHIP 1M 1/10W(1608)
R314	1-211-977-11	s	RESISTOR,CHIP 22 1/10W (1608)
R315	1-218-855-11	s	RESISTOR,CHIP 2.2K 1/10W(1608)
R316	1-218-871-11	s	RESISTOR,CHIP 10K 1/10W (1608)
R317	1-218-855-11	s	RESISTOR,CHIP 2.2K 1/10W(1608)
R318	1-211-981-11	s	RESISTOR,CHIP 33 1/10W (1608)
R319	1-218-847-11	s	RESISTOR, CHIP 1K 1/10W (1608)
R320	1-218-847-11	s	RESISTOR, CHIP 1K 1/10W (1608)
R321	1-218-831-11	s	RESISTOR, CHIP 220 1/10W(1608)
R322	1-218-861-11	s	RESISTOR,CHIP 3.9K 1/10W(1608)
R323	1-218-847-11	s	RESISTOR, CHIP 1K 1/10W (1608)
R326	1-218-847-11	s	RESISTOR, CHIP 1K 1/10W (1608)
R327	1-218-855-11	s	RESISTOR,CHIP 2.2K 1/10W(1608)
R328	1-218-835-11	s	RESISTOR,CHIP 330 1/10W (1608)
R329	1-218-835-11	s	RESISTOR,CHIP 330 1/10W (1608)
R330	1-218-863-11	s	RESISTOR,CHIP 4.7K 1/10W(1608)
R331	1-218-863-11	s	RESISTOR,CHIP 4.7K 1/10W(1608)
R332	1-218-855-11	s	RESISTOR,CHIP 2.2K 1/10W(1608)
R333	1-216-864-11	s	CONDUCTOR, CHIP (1608)
R334	1-218-823-11	s	RESISTOR,CHIP 100 1/10W (1608)
R335	1-218-839-11	s	RESISTOR,CHIP 470 1/10W (1608)
R337	1-218-847-11	s	RESISTOR, CHIP 1K 1/10W (1608)
R338	1-218-859-11	s	RESISTOR,CHIP 3.3K 1/10W(1608)
R339	1-218-859-11	s	RESISTOR,CHIP 3.3K 1/10W(1608)
R340	1-218-835-11	s	RESISTOR,CHIP 330 1/10W (1608)
R341	1-218-834-11	s	RESISTOR,CHIP 300 1/10W (1608)
R342	1-218-834-11	s	RESISTOR,CHIP 300 1/10W (1608)
R343	1-218-823-11	s	RESISTOR,CHIP 100 1/10W (1608)
R344	1-218-834-11	s	RESISTOR,CHIP 300 1/10W (1608)
R345	1-218-823-11	s	RESISTOR,CHIP 100 1/10W (1608)

(DM-123/P BOARD [SUFFIX 15-])

Ref. No. or Q'ty	Part No.	SP	Description
R346	1-218-863-11	s	RESISTOR,CHIP 4.7K 1/10W(1608)
R347	1-218-839-11	s	RESISTOR,CHIP 470 1/10W (1608)
R348	1-218-863-11	s	RESISTOR,CHIP 4.7K 1/10W(1608)
R349	1-218-823-11	s	RESISTOR,CHIP 100 1/10W (1608)
R350	1-218-831-11	s	RESISTOR, CHIP 220 1/10W(1608)
R351	1-218-840-11	s	RESISTOR,CHIP 510 1/10W (1608)
R352	1-218-838-11	s	RESISTOR,CHIP 430 1/10W (1608)
R353	1-218-839-11	s	RESISTOR,CHIP 470 1/10W (1608)
R354	1-218-831-11	s	RESISTOR, CHIP 220 1/10W(1608)
R355	1-218-839-11	s	RESISTOR,CHIP 470 1/10W (1608)
R356	1-218-837-11	s	RESISTOR,CHIP 390 1/10W (1608)
R357	1-218-839-11	s	RESISTOR,CHIP 470 1/10W (1608)
R358	1-218-831-11	s	RESISTOR, CHIP 220 1/10W(1608)
R360	1-218-831-11	s	RESISTOR, CHIP 220 1/10W(1608)
R361	1-218-823-11	s	RESISTOR,CHIP 100 1/10W (1608)
R362	1-218-823-11	s	RESISTOR,CHIP 100 1/10W (1608)
R363	1-218-863-11	s	RESISTOR,CHIP 4.7K 1/10W(1608)
R364	1-218-823-11	s	RESISTOR,CHIP 100 1/10W (1608)
R365	1-218-863-11	s	RESISTOR,CHIP 4.7K 1/10W(1608)
R366	1-218-823-11	s	RESISTOR,CHIP 100 1/10W (1608)
R367	1-218-831-11	s	RESISTOR, CHIP 220 1/10W(1608)
R368	1-218-840-11	s	RESISTOR,CHIP 510 1/10W (1608)
R369	1-218-837-11	s	RESISTOR,CHIP 390 1/10W (1608)
R370	1-218-839-11	s	RESISTOR,CHIP 470 1/10W (1608)
R371	1-218-831-11	s	RESISTOR, CHIP 220 1/10W(1608)
R372	1-218-840-11	s	RESISTOR,CHIP 510 1/10W (1608)
R373	1-218-836-11	s	RESISTOR,CHIP 360 1/10W (1608)
R374	1-218-839-11	s	RESISTOR,CHIP 470 1/10W (1608)
R375	1-218-831-11	s	RESISTOR, CHIP 220 1/10W(1608)
R376	1-218-831-11	s	RESISTOR, CHIP 220 1/10W(1608)
R377	1-218-823-11	s	RESISTOR,CHIP 100 1/10W (1608)
R378	1-218-823-11	s	RESISTOR,CHIP 100 1/10W (1608)
R379	1-218-863-11	s	RESISTOR,CHIP 4.7K 1/10W(1608)
R380	1-218-863-11	s	RESISTOR,CHIP 4.7K 1/10W(1608)
R381	1-218-871-11	s	RESISTOR,CHIP 10K 1/10W (1608)
R382	1-218-831-11	s	RESISTOR, CHIP 220 1/10W(1608)
R383	1-218-835-11	s	RESISTOR,CHIP 330 1/10W (1608)
R384	1-218-835-11	s	RESISTOR,CHIP 330 1/10W (1608)
R385	1-218-863-11	s	RESISTOR,CHIP 4.7K 1/10W(1608)
R386	1-218-863-11	s	RESISTOR,CHIP 4.7K 1/10W(1608)
R387	1-218-847-11	s	RESISTOR, CHIP 1K 1/10W (1608)
R388	1-211-977-11	s	RESISTOR,CHIP 22 1/10W (1608)
R389	1-211-977-11	s	RESISTOR,CHIP 22 1/10W (1608)
R390	1-218-847-11	s	RESISTOR, CHIP 1K 1/10W (1608)
R391	1-218-835-11	s	RESISTOR,CHIP 330 1/10W (1608)
R392	1-218-840-11	s	RESISTOR,CHIP 510 1/10W (1608)
R393	1-218-840-11	s	RESISTOR,CHIP 510 1/10W (1608)
R394	1-218-865-11	s	RESISTOR,CHIP 5.6K 1/10W(1608)
R395	1-218-873-11	s	RESISTOR,CHIP 12K 1/10W (1608)
R396	1-218-835-11	s	RESISTOR,CHIP 330 1/10W (1608)
R397	1-218-835-11	s	RESISTOR,CHIP 330 1/10W (1608)
R399	1-218-873-11	s	RESISTOR,CHIP 12K 1/10W (1608)
R400	1-218-863-11	s	RESISTOR,CHIP 4.7K 1/10W(1608)
R401	1-218-863-11	s	RESISTOR,CHIP 4.7K 1/10W(1608)
R402	1-218-855-11	s	RESISTOR,CHIP 2.2K 1/10W(1608)
R403	1-218-839-11	s	RESISTOR,CHIP 470 1/10W (1608)
R404	1-218-847-11	s	RESISTOR, CHIP 1K 1/10W (1608)
R405	1-218-849-11	s	RESISTOR,CHIP 1.2K 1/10W(1608)
R406	1-218-868-11	s	RESISTOR,CHIP 7.5K 1/10W(1608)

(DM-123/P BOARD [SUFFIX 15-])

Ref. No. or Q'ty	Part No.	SP	Description
R407	1-218-848-11	s	RESISTOR,CHIP 1.1K 1/10W(1608)
R409	1-218-863-11	s	RESISTOR,CHIP 4.7K 1/10W(1608)
R410	1-218-847-11	s	RESISTOR, CHIP 1K 1/10W (1608)
R411	1-218-863-11	s	RESISTOR,CHIP 4.7K 1/10W(1608)
R412	1-218-871-11	s	RESISTOR,CHIP 10K 1/10W (1608)
R413	1-218-847-11	s	RESISTOR, CHIP 1K 1/10W (1608)
R414	1-218-887-11	s	RESISTOR,CHIP 47K 1/10W (1608)
R415	1-218-871-11	s	RESISTOR,CHIP 10K 1/10W (1608)
R416	1-218-879-11	s	RESISTOR,CHIP 22K 1/10W (1608)
R417	1-218-879-11	s	RESISTOR,CHIP 22K 1/10W (1608)
R418	1-218-871-11	s	RESISTOR,CHIP 10K 1/10W (1608)
R419	1-218-879-11	s	RESISTOR,CHIP 22K 1/10W (1608)
R420	1-218-871-11	s	RESISTOR,CHIP 10K 1/10W (1608)
R421	1-218-847-11	s	RESISTOR, CHIP 1K 1/10W (1608)
R422	1-218-887-11	s	RESISTOR,CHIP 47K 1/10W (1608)
R423	1-218-880-11	s	RESISTOR,CHIP 24K 1/10W (1608)
R424	1-218-823-11	s	RESISTOR,CHIP 100 1/10W (1608)
R425	1-218-855-11	s	RESISTOR,CHIP 2.2K 1/10W(1608)
R426	1-218-855-11	s	RESISTOR,CHIP 2.2K 1/10W(1608)
R427	1-218-855-11	s	RESISTOR,CHIP 2.2K 1/10W(1608)
R505	1-218-871-11	s	RESISTOR,CHIP 10K 1/10W (1608)
R506	1-218-855-11	s	RESISTOR,CHIP 2.2K 1/10W(1608)
R507	1-218-871-11	s	RESISTOR,CHIP 10K 1/10W (1608)
R508	1-218-872-11	s	RESISTOR,CHIP 11K 1/10W (1608)
R509	1-218-866-11	s	RESISTOR,CHIP 6.2K 1/10W(1608)
R510	1-218-871-11	s	RESISTOR,CHIP 10K 1/10W (1608)
R511	1-218-863-11	s	RESISTOR,CHIP 4.7K 1/10W(1608)
R512	1-218-887-11	s	RESISTOR,CHIP 47K 1/10W (1608)
R513	1-218-834-11	s	RESISTOR,CHIP 300 1/10W (1608)
R514	1-218-873-11	s	RESISTOR,CHIP 12K 1/10W (1608)
R515	1-218-871-11	s	RESISTOR,CHIP 10K 1/10W (1608)
R516	1-218-868-11	s	RESISTOR,CHIP 7.5K 1/10W(1608)
R517	1-218-847-11	s	RESISTOR, CHIP 1K 1/10W (1608)
R518	1-218-847-11	s	RESISTOR, CHIP 1K 1/10W (1608)
R519	1-218-847-11	s	RESISTOR, CHIP 1K 1/10W (1608)
R520	1-211-985-11	s	RESISTOR,CHIP 47 1/10W (1608)
R521	1-211-985-11	s	RESISTOR,CHIP 47 1/10W (1608)
R522	1-218-856-11	s	RESISTOR,CHIP 2.4K 1/10W(1608)
R523	1-218-865-11	s	RESISTOR,CHIP 5.6K 1/10W(1608)
R524	1-218-887-11	s	RESISTOR,CHIP 47K 1/10W (1608)
R525	1-218-895-11	s	RESISTOR,CHIP 100K 1/10W(1608)
R526	1-218-911-11	s	RESISTOR,CHIP 470K 1/10W(1608)
R527	1-218-863-11	s	RESISTOR,CHIP 4.7K 1/10W(1608)
R528	1-218-881-11	s	RESISTOR, CHIP 27K 1/10W(1608)
R529	1-218-823-11	s	RESISTOR,CHIP 100 1/10W (1608)
R530	1-218-866-11	s	RESISTOR,CHIP 6.2K 1/10W(1608)
R531	1-218-831-11	s	RESISTOR, CHIP 220 1/10W(1608)
R532	1-218-831-11	s	RESISTOR, CHIP 220 1/10W(1608)
R533	1-218-823-11	s	RESISTOR,CHIP 100 1/10W (1608)
R534 *N	1-218-825-11	s	RESISTOR,CHIP 120 1/10W (1608)
*P	1-218-830-11	s	RESISTOR,CHIP 200 1/10W (1608)
R535	1-218-861-11	s	RESISTOR,CHIP 3.9K 1/10W(1608)
R537	1-218-876-11	s	RESISTOR,CHIP 16K 1/10W (1608)
R538	1-218-849-11	s	RESISTOR,CHIP 1.2K 1/10W(1608)
R539	1-218-847-11	s	RESISTOR, CHIP 1K 1/10W (1608)
R540	1-211-977-11	s	RESISTOR,CHIP 22 1/10W (1608)
R541	1-218-847-11	s	RESISTOR, CHIP 1K 1/10W (1608)
R542	1-218-871-11	s	RESISTOR,CHIP 10K 1/10W (1608)
R543	1-218-863-11	s	RESISTOR,CHIP 4.7K 1/10W(1608)

(DM-123/P BOARD [SUFFIX 15-])

Ref. No. or Q'ty	Part No.	SP	Description
R544 *P	1-211-977-11	s	RESISTOR,CHIP 22 1/10W (1608)
R545 *P	1-218-839-11	s	RESISTOR,CHIP 470 1/10W (1608)
R546 *P	1-218-839-11	s	RESISTOR,CHIP 470 1/10W (1608)
R548	1-218-879-11	s	RESISTOR,CHIP 22K 1/10W (1608)
R549	1-218-878-11	s	RESISTOR,CHIP 20K 1/10W (1608)
R550 *P	1-218-876-11	s	RESISTOR,CHIP 16K 1/10W (1608)
R551 *P	1-218-835-11	s	RESISTOR,CHIP 330 1/10W (1608)
R552	1-218-839-11	s	RESISTOR,CHIP 470 1/10W (1608)
R553	1-218-839-11	s	RESISTOR,CHIP 470 1/10W (1608)
R555	1-218-839-11	s	RESISTOR,CHIP 470 1/10W (1608)
R556	1-218-839-11	s	RESISTOR,CHIP 470 1/10W (1608)
R557	1-218-876-11	s	RESISTOR,CHIP 16K 1/10W (1608)
R559	1-218-835-11	s	RESISTOR,CHIP 330 1/10W (1608)
R560 *P	1-218-862-11	s	RESISTOR,CHIP 4.3K 1/10W(1608)
R561 *P	1-218-862-11	s	RESISTOR,CHIP 4.3K 1/10W(1608)
R563	1-218-847-11	s	RESISTOR, CHIP 1K 1/10W (1608)
R564 *P	1-218-847-11	s	RESISTOR, CHIP 1K 1/10W (1608)
R565	1-218-862-11	s	RESISTOR,CHIP 4.3K 1/10W(1608)
R566	1-218-862-11	s	RESISTOR,CHIP 4.3K 1/10W(1608)
R568	1-218-847-11	s	RESISTOR, CHIP 1K 1/10W (1608)
R569	1-218-847-11	s	RESISTOR, CHIP 1K 1/10W (1608)
R570	1-218-847-11	s	RESISTOR, CHIP 1K 1/10W (1608)
R571	1-218-895-11	s	RESISTOR,CHIP 100K 1/10W(1608)
R572 *P	1-218-823-11	s	RESISTOR,CHIP 100 1/10W (1608)
R573	1-218-847-11	s	RESISTOR, CHIP 1K 1/10W (1608)
R574	1-218-839-11	s	RESISTOR,CHIP 470 1/10W (1608)
R575	1-218-863-11	s	RESISTOR,CHIP 4.7K 1/10W(1608)
R576	1-218-847-11	s	RESISTOR, CHIP 1K 1/10W (1608)
R577	1-218-877-11	s	RESISTOR,CHIP 18K 1/10W (1608)
R578	1-218-862-11	s	RESISTOR,CHIP 4.3K 1/10W(1608)
R579	1-218-863-11	s	RESISTOR,CHIP 4.7K 1/10W(1608)
R580	1-218-871-11	s	RESISTOR,CHIP 10K 1/10W (1608)
R581	1-218-891-11	s	RESISTOR,CHIP 68K 1/10W (1608)
R582	1-218-871-11	s	RESISTOR,CHIP 10K 1/10W (1608)
R583	1-211-986-11	s	RESISTOR,CHIP 51 1/10W (1608)
R584 *P	1-218-871-11	s	RESISTOR,CHIP 10K 1/10W (1608)
R585 *N	1-216-864-11	s	RESISTOR,CHIP 0 1/16W (1608)
R586	1-218-839-11	s	RESISTOR,CHIP 470 1/10W (1608)
R587	1-218-847-11	s	RESISTOR, CHIP 1K 1/10W (1608)
R588	1-211-977-11	s	RESISTOR,CHIP 22 1/10W (1608)
R589	1-211-977-11	s	RESISTOR,CHIP 22 1/10W (1608)
R590 *N	1-218-839-11	s	RESISTOR,CHIP 470 1/10W (1608)
*P	1-218-834-11	s	RESISTOR,CHIP 300 1/10W (1608)
R591	1-218-847-11	s	RESISTOR, CHIP 1K 1/10W (1608)
R592	1-218-839-11	s	RESISTOR,CHIP 470 1/10W (1608)
R593	1-218-855-11	s	RESISTOR,CHIP 2.2K 1/10W(1608)
R594 *N	1-218-839-11	s	RESISTOR,CHIP 470 1/10W (1608)
*P	1-218-834-11	s	RESISTOR,CHIP 300 1/10W (1608)
R595 *N	1-216-864-11	s	RESISTOR,CHIP 0 1/16W (1608)
R596 *P	1-211-977-11	s	RESISTOR,CHIP 22 1/10W (1608)
R597 *P	1-211-977-11	s	RESISTOR,CHIP 22 1/10W (1608)
R598 *P	1-218-855-11	s	RESISTOR,CHIP 2.2K 1/10W(1608)
R599 *P	1-218-855-11	s	RESISTOR,CHIP 2.2K 1/10W(1608)
R600	1-218-855-11	s	RESISTOR,CHIP 2.2K 1/10W(1608)
R601 *P	1-218-871-11	s	RESISTOR,CHIP 10K 1/10W (1608)
R602 *P	1-218-871-11	s	RESISTOR,CHIP 10K 1/10W (1608)
R603	1-218-847-11	s	RESISTOR, CHIP 1K 1/10W (1608)
R604	1-218-847-11	s	RESISTOR, CHIP 1K 1/10W (1608)
R607	1-218-871-11	s	RESISTOR,CHIP 10K 1/10W (1608)

(DM-123/P BOARD [SUFFIX 15-])

Ref. No. or Q'ty	Part No.	SP	Description
R608	1-218-871-11	s	RESISTOR,CHIP 10K 1/10W (1608)
R609	1-218-874-11	s	RESISTOR,CHIP 13K 1/10W (1608)
R610	1-218-853-11	s	RESISTOR,CHIP 1.8K 1/10W(1608)
R611	1-218-847-11	s	RESISTOR, CHIP 1K 1/10W (1608)
R612	1-218-871-11	s	RESISTOR,CHIP 10K 1/10W (1608)
R613	1-218-839-11	s	RESISTOR,CHIP 470 1/10W (1608)
R614	1-218-823-11	s	RESISTOR,CHIP 100 1/10W (1608)
R617	1-218-823-11	s	RESISTOR,CHIP 100 1/10W (1608)
R618	1-218-847-11	s	RESISTOR, CHIP 1K 1/10W (1608)
R619	1-218-843-11	s	RESISTOR,CHIP 680 1/10W (1608)
R624	1-218-847-11	s	RESISTOR, CHIP 1K 1/10W (1608)
R625	1-211-985-11	s	RESISTOR,CHIP 47 1/10W (1608)
R626	1-211-985-11	s	RESISTOR,CHIP 47 1/10W (1608)
R627	1-218-847-11	s	RESISTOR, CHIP 1K 1/10W (1608)
R628	1-218-891-11	s	RESISTOR,CHIP 68K 1/10W (1608)
R629	1-218-831-11	s	RESISTOR, CHIP 220 1/10W(1608)
R630	1-211-985-11	s	RESISTOR,CHIP 47 1/10W (1608)
R631	1-218-855-11	s	RESISTOR,CHIP 2.2K 1/10W(1608)
R646	1-216-864-11	s	CONDUCTOR, CHIP (1608)
R647	1-218-871-11	s	RESISTOR,CHIP 10K 1/10W (1608)
R703	1-218-853-11	s	RESISTOR,CHIP 1.8K 1/10W(1608)
R704	1-218-865-11	s	RESISTOR,CHIP 5.6K 1/10W(1608)
R705	1-218-895-11	s	RESISTOR,CHIP 100K 1/10W(1608)
R706	1-218-887-11	s	RESISTOR,CHIP 47K 1/10W (1608)
R707	1-218-866-11	s	RESISTOR,CHIP 6.2K 1/10W(1608)
R708	1-218-881-11	s	RESISTOR, CHIP 27K 1/10W(1608)
R709	1-218-866-11	s	RESISTOR,CHIP 6.2K 1/10W(1608)
R710	1-218-831-11	s	RESISTOR, CHIP 220 1/10W(1608)
R711	1-218-831-11	s	RESISTOR, CHIP 220 1/10W(1608)
R712	1-218-836-11	s	RESISTOR,CHIP 360 1/10W (1608)
R713	1-218-861-11	s	RESISTOR,CHIP 3.9K 1/10W(1608)
R714	1-211-985-11	s	RESISTOR,CHIP 47 1/10W (1608)
R715	1-218-873-11	s	RESISTOR,CHIP 12K 1/10W (1608)
R716	1-218-848-11	s	RESISTOR,CHIP 1.1K 1/10W(1608)
R717	1-218-871-11	s	RESISTOR,CHIP 10K 1/10W (1608)
R718	1-211-977-11	s	RESISTOR,CHIP 22 1/10W (1608)
R719	1-218-847-11	s	RESISTOR, CHIP 1K 1/10W (1608)
R720 *P	1-218-839-11	s	RESISTOR,CHIP 470 1/10W (1608)
R721 *P	1-218-835-11	s	RESISTOR,CHIP 330 1/10W (1608)
R723 *P	1-218-862-11	s	RESISTOR,CHIP 4.3K 1/10W(1608)
R724 *P	1-218-868-11	s	RESISTOR,CHIP 7.5K 1/10W(1608)
R725	1-218-847-11	s	RESISTOR, CHIP 1K 1/10W (1608)
R726	1-218-839-11	s	RESISTOR,CHIP 470 1/10W (1608)
R727	1-218-835-11	s	RESISTOR,CHIP 330 1/10W (1608)
R729	1-218-851-11	s	RESISTOR,CHIP 1.5K 1/10W(1608)
R730	1-218-856-11	s	RESISTOR,CHIP 2.4K 1/10W(1608)
R731	1-218-847-11	s	RESISTOR, CHIP 1K 1/10W (1608)
R732	1-218-847-11	s	RESISTOR, CHIP 1K 1/10W (1608)
R737	1-218-847-11	s	RESISTOR, CHIP 1K 1/10W (1608)
R738	1-218-853-11	s	RESISTOR,CHIP 1.8K 1/10W(1608)
R739	1-218-853-11	s	RESISTOR,CHIP 1.8K 1/10W(1608)
R740	1-218-827-11	s	RESISTOR,CHIP 150 1/10W (1608)
R741	1-218-839-11	s	RESISTOR,CHIP 470 1/10W (1608)
R742	1-218-827-11	s	RESISTOR,CHIP 150 1/10W (1608)
R743	1-218-859-11	s	RESISTOR,CHIP 3.3K 1/10W(1608)
R746	1-218-847-11	s	RESISTOR, CHIP 1K 1/10W (1608)
R747	1-218-863-11	s	RESISTOR,CHIP 4.7K 1/10W(1608)
R748	1-218-847-11	s	RESISTOR, CHIP 1K 1/10W (1608)
R749	1-218-863-11	s	RESISTOR,CHIP 4.7K 1/10W(1608)

(DM-123/P BOARD [SUFFIX 15-])

Ref. No. or Q'ty	Part No.	SP	Description
R750	1-218-871-11	s	RESISTOR,CHIP 10K 1/10W (1608)
R751	1-218-891-11	s	RESISTOR,CHIP 68K 1/10W (1608)
R752	1-218-871-11	s	RESISTOR,CHIP 10K 1/10W (1608)
R755	1-211-986-11	s	RESISTOR,CHIP 51 1/10W (1608)
R756	1-218-877-11	s	RESISTOR,CHIP 18K 1/10W (1608)
R757	1-218-862-11	s	RESISTOR,CHIP 4.3K 1/10W(1608)
R758	1-218-871-11	s	RESISTOR,CHIP 10K 1/10W (1608)
R759	1-218-871-11	s	RESISTOR,CHIP 10K 1/10W (1608)
R760 *P	1-211-977-11	s	RESISTOR,CHIP 22 1/10W (1608)
R761	1-211-977-11	s	RESISTOR,CHIP 22 1/10W (1608)
R762	1-218-874-11	s	RESISTOR,CHIP 13K 1/10W (1608)
R763	1-218-853-11	s	RESISTOR,CHIP 1.8K 1/10W(1608)
R764	1-218-847-11	s	RESISTOR, CHIP 1K 1/10W (1608)
R765	1-218-871-11	s	RESISTOR,CHIP 10K 1/10W (1608)
R766	1-218-823-11	s	RESISTOR,CHIP 100 1/10W (1608)
R767	1-218-823-11	s	RESISTOR,CHIP 100 1/10W (1608)
R768	1-218-847-11	s	RESISTOR, CHIP 1K 1/10W (1608)
R769	1-218-835-11	s	RESISTOR,CHIP 330 1/10W (1608)
R770	1-218-835-11	s	RESISTOR,CHIP 330 1/10W (1608)
R771	1-218-855-11	s	RESISTOR,CHIP 2.2K 1/10W(1608)
R772 *P	1-218-847-11	s	RESISTOR, CHIP 1K 1/10W (1608)
R773	1-218-847-11	s	RESISTOR, CHIP 1K 1/10W (1608)
R774	1-218-823-11	s	RESISTOR,CHIP 100 1/10W (1608)
R775	1-218-823-11	s	RESISTOR,CHIP 100 1/10W (1608)
R776	1-218-847-11	s	RESISTOR, CHIP 1K 1/10W (1608)
R777	1-218-843-11	s	RESISTOR,CHIP 680 1/10W (1608)
R781	1-218-835-11	s	RESISTOR,CHIP 330 1/10W (1608)
R784	1-211-985-11	s	RESISTOR,CHIP 47 1/10W (1608)
R785	1-211-985-11	s	RESISTOR,CHIP 47 1/10W (1608)
R901	1-218-847-11	s	RESISTOR, CHIP 1K 1/10W (1608)
R902	1-218-823-11	s	RESISTOR,CHIP 100 1/10W (1608)
R903	1-218-873-11	s	RESISTOR,CHIP 12K 1/10W (1608)
R904	1-218-871-11	s	RESISTOR,CHIP 10K 1/10W (1608)
R905	1-218-877-11	s	RESISTOR,CHIP 18K 1/10W (1608)
R906	1-218-855-11	s	RESISTOR,CHIP 2.2K 1/10W(1608)
R907	1-218-823-11	s	RESISTOR,CHIP 100 1/10W (1608)
R908	1-218-871-11	s	RESISTOR,CHIP 10K 1/10W (1608)
R909	1-218-871-11	s	RESISTOR,CHIP 10K 1/10W (1608)
R910	1-216-864-11	s	CONDUCTOR, CHIP (1608)
R911	1-216-864-11	s	CONDUCTOR, CHIP (1608)
R912	1-218-871-11	s	RESISTOR,CHIP 10K 1/10W (1608)
R913	1-218-823-11	s	RESISTOR,CHIP 100 1/10W (1608)
R914	1-218-895-11	s	RESISTOR,CHIP 100K 1/10W(1608)
R916	1-218-823-11	s	RESISTOR,CHIP 100 1/10W (1608)
R918	1-218-871-11	s	RESISTOR,CHIP 10K 1/10W (1608)
R919	1-218-895-11	s	RESISTOR,CHIP 100K 1/10W(1608)
R920	1-218-895-11	s	RESISTOR,CHIP 100K 1/10W(1608)
R921	1-218-895-11	s	RESISTOR,CHIP 100K 1/10W(1608)
R922	1-218-871-11	s	RESISTOR,CHIP 10K 1/10W (1608)
R923	1-218-879-11	s	RESISTOR,CHIP 22K 1/10W (1608)
R924	1-218-887-11	s	RESISTOR,CHIP 47K 1/10W (1608)
R925	1-218-871-11	s	RESISTOR,CHIP 10K 1/10W (1608)
R926	1-218-871-11	s	RESISTOR,CHIP 10K 1/10W (1608)
R927	1-218-883-11	s	RESISTOR,CHIP 33K 1/10W (1608)
R928	1-218-887-11	s	RESISTOR,CHIP 47K 1/10W (1608)
R929	1-218-887-11	s	RESISTOR,CHIP 47K 1/10W (1608)
R930	1-218-895-11	s	RESISTOR,CHIP 100K 1/10W(1608)
R931	1-218-895-11	s	RESISTOR,CHIP 100K 1/10W(1608)
R932 *2	1-218-895-11	s	RESISTOR,CHIP 100K 1/10W(1608)
*1	1-218-847-11	s	RESISTOR, CHIP 1K 1/10W (1608)

(DM-123/P BOARD [SUFFIX 15-])

Ref. No. or Q'ty	Part No.	SP	Description
R933	1-216-864-11	s	CONDUCTOR, CHIP (1608)
R934	1-218-871-11	s	RESISTOR,CHIP 10K 1/10W (1608)
R935	1-218-847-11	s	RESISTOR, CHIP 1K 1/10W (1608)
R937	1-218-871-11	s	RESISTOR,CHIP 10K 1/10W (1608)
R938	1-218-871-11	s	RESISTOR,CHIP 10K 1/10W (1608)
R939	1-218-887-11	s	RESISTOR,CHIP 47K 1/10W (1608)
R940	1-218-871-11	s	RESISTOR,CHIP 10K 1/10W (1608)
R941	1-218-847-11	s	RESISTOR, CHIP 1K 1/10W (1608)
R942	1-218-871-11	s	RESISTOR,CHIP 10K 1/10W (1608)
R943	1-218-895-11	s	RESISTOR,CHIP 100K 1/10W(1608)
R944	1-218-847-11	s	RESISTOR, CHIP 1K 1/10W (1608)
R945	1-218-895-11	s	RESISTOR,CHIP 100K 1/10W(1608)
R946	1-218-911-11	s	RESISTOR,CHIP 470K 1/10W(1608)
R947	1-218-871-11	s	RESISTOR,CHIP 10K 1/10W (1608)
R948	1-218-871-11	s	RESISTOR,CHIP 10K 1/10W (1608)
R949	1-218-871-11	s	RESISTOR,CHIP 10K 1/10W (1608)
R950	1-218-847-11	s	RESISTOR, CHIP 1K 1/10W (1608)
R951	1-218-847-11	s	RESISTOR, CHIP 1K 1/10W (1608)
R952	1-218-823-11	s	RESISTOR,CHIP 100 1/10W (1608)
R954	1-218-871-11	s	RESISTOR,CHIP 10K 1/10W (1608)
R956 *2	1-218-895-11	s	RESISTOR,CHIP 100K 1/10W(1608)
R957 *2	1-218-895-11	s	RESISTOR,CHIP 100K 1/10W(1608)
R958 *2	1-218-823-11	s	RESISTOR,CHIP 100 1/10W (1608)
R959 *2	1-218-823-11	s	RESISTOR,CHIP 100 1/10W (1608)
R993	1-218-895-11	s	RESISTOR,CHIP 100K 1/10W(1608)
R994	1-218-823-11	s	RESISTOR,CHIP 100 1/10W (1608)
R995	1-218-871-11	s	RESISTOR,CHIP 10K 1/10W (1608)
R1004	1-218-903-11	s	RESISTOR,CHIP 220K 1/10W(1608)
R1005	1-218-907-11	s	RESISTOR,CHIP 330K 1/10W(1608)
R1006	1-218-871-11	s	RESISTOR,CHIP 10K 1/10W (1608)
R1007	1-216-864-11	s	CONDUCTOR, CHIP (1608)
R1009	1-216-864-11	s	CONDUCTOR, CHIP (1608)
R1010	1-216-864-11	s	CONDUCTOR, CHIP (1608)
R1012	1-216-864-11	s	CONDUCTOR, CHIP (1608)
R1015	1-216-864-11	s	CONDUCTOR, CHIP (1608)
R1019	1-218-871-11	s	RESISTOR,CHIP 10K 1/10W (1608)
R1021	1-216-864-11	s	CONDUCTOR, CHIP (1608)
R1022	1-218-847-11	s	RESISTOR, CHIP 1K 1/10W (1608)
R1023	1-216-864-11	s	CONDUCTOR, CHIP (1608)
R1114	1-218-835-11	s	RESISTOR,CHIP 330 1/10W (1608)
R1115	1-218-835-11	s	RESISTOR,CHIP 330 1/10W (1608)
R1116	1-211-985-11	s	RESISTOR,CHIP 47 1/10W (1608)
R1117	1-218-847-11	s	RESISTOR, CHIP 1K 1/10W (1608)
R1118	1-218-841-11	s	RESISTOR,CHIP 560 1/10W (1608)
R1119	1-218-855-11	s	RESISTOR,CHIP 2.2K 1/10W(1608)
R1120	1-218-837-11	s	RESISTOR,CHIP 390 1/10W (1608)
R1121	1-218-838-11	s	RESISTOR,CHIP 430 1/10W (1608)
R1122	1-218-895-11	s	RESISTOR,CHIP 100K 1/10W(1608)
R1123	1-216-857-11	s	RESISTOR,CHIP 1M 1/10W(1608)
R1124	1-218-879-11	s	RESISTOR,CHIP 22K 1/10W (1608)
R1125	1-218-855-11	s	RESISTOR,CHIP 2.2K 1/10W(1608)
R1126	1-218-859-11	s	RESISTOR,CHIP 3.3K 1/10W(1608)
R1127	1-218-871-11	s	RESISTOR,CHIP 10K 1/10W (1608)
R1128	1-218-875-11	s	RESISTOR,CHIP 15K 1/10W (1608)
R1129 *N	1-218-907-11	s	RESISTOR,CHIP 330K 1/10W(1608)
*P	1-218-871-11	s	RESISTOR,CHIP 10K 1/10W (1608)
R1135	1-218-857-11	s	RESISTOR,CHIP 2.7K 1/10W(1608)
R1137	1-218-907-11	s	RESISTOR,CHIP 330K 1/10W(1608)
R1138	1-218-855-11	s	RESISTOR,CHIP 2.2K 1/10W(1608)

(DM-123/P BOARD [SUFFIX 15-])

Ref. No. or Q'ty	Part No.	SP	Description
R1139	1-218-873-11	s	RESISTOR,CHIP 12K 1/10W (1608)
R1142	1-218-869-11	s	RESISTOR,CHIP 8.2K 1/10W(1608)
R1144	1-218-895-11	s	RESISTOR,CHIP 100K 1/10W(1608)
R1145	1-218-895-11	s	RESISTOR,CHIP 100K 1/10W(1608)
R1146	1-218-863-11	s	RESISTOR,CHIP 4.7K 1/10W(1608)
R1147	1-218-871-11	s	RESISTOR,CHIP 10K 1/10W (1608)
R1150	1-218-855-11	s	RESISTOR,CHIP 2.2K 1/10W(1608)
R1152	1-218-855-11	s	RESISTOR,CHIP 2.2K 1/10W(1608)
R1153	1-211-985-11	s	RESISTOR,CHIP 47 1/10W (1608)
R1154	1-211-985-11	s	RESISTOR,CHIP 47 1/10W (1608)
R1155	1-218-871-11	s	RESISTOR,CHIP 10K 1/10W (1608)
R1156	1-218-870-11	s	RESISTOR,CHIP 9.1K 1/10W(1608)
R1157	1-211-985-11	s	RESISTOR,CHIP 47 1/10W (1608)
R1158	1-218-831-11	s	RESISTOR, CHIP 220 1/10W(1608)
R1159	1-218-831-11	s	RESISTOR, CHIP 220 1/10W(1608)
R1160	1-218-839-11	s	RESISTOR,CHIP 470 1/10W (1608)
R1161	1-218-839-11	s	RESISTOR,CHIP 470 1/10W (1608)
R1162	1-218-839-11	s	RESISTOR,CHIP 470 1/10W (1608)
R1163	1-218-839-11	s	RESISTOR,CHIP 470 1/10W (1608)
R1164	1-218-825-11	s	RESISTOR,CHIP 120 1/10W (1608)
R1165	1-218-825-11	s	RESISTOR,CHIP 120 1/10W (1608)
R1166	1-218-873-11	s	RESISTOR,CHIP 12K 1/10W (1608)
R1167	1-218-879-11	s	RESISTOR,CHIP 22K 1/10W (1608)
R1168	1-218-895-11	s	RESISTOR,CHIP 100K 1/10W(1608)
R1169	1-218-825-11	s	RESISTOR,CHIP 120 1/10W (1608)
R1171	1-218-881-11	s	RESISTOR, CHIP 27K 1/10W(1608)
R1172	1-218-881-11	s	RESISTOR, CHIP 27K 1/10W(1608)
R1209	1-218-835-11	s	RESISTOR,CHIP 330 1/10W (1608)
R1210	1-218-835-11	s	RESISTOR,CHIP 330 1/10W (1608)
R1211	1-211-985-11	s	RESISTOR,CHIP 47 1/10W (1608)
R1212	1-218-847-11	s	RESISTOR, CHIP 1K 1/10W (1608)
R1213	1-218-841-11	s	RESISTOR,CHIP 560 1/10W (1608)
R1214	1-218-841-11	s	RESISTOR,CHIP 560 1/10W (1608)
R1215	1-218-838-11	s	RESISTOR,CHIP 430 1/10W (1608)
R1216	1-218-855-11	s	RESISTOR,CHIP 2.2K 1/10W(1608)
R1217	1-218-895-11	s	RESISTOR,CHIP 100K 1/10W(1608)
R1219	1-216-857-11	s	RESISTOR,CHIP 1M 1/10W(1608)
R1220	1-218-879-11	s	RESISTOR,CHIP 22K 1/10W (1608)
R1221	1-218-855-11	s	RESISTOR,CHIP 2.2K 1/10W(1608)
R1222	1-218-859-11	s	RESISTOR,CHIP 3.3K 1/10W(1608)
R1224	1-218-878-11	s	RESISTOR,CHIP 20K 1/10W (1608)
R1225	1-218-877-11	s	RESISTOR,CHIP 18K 1/10W (1608)
R1231	1-218-907-11	s	RESISTOR,CHIP 330K 1/10W(1608)
R1233	1-218-855-11	s	RESISTOR,CHIP 2.2K 1/10W(1608)
R1237	1-218-869-11	s	RESISTOR,CHIP 8.2K 1/10W(1608)
R1240	1-218-863-11	s	RESISTOR,CHIP 4.7K 1/10W(1608)
R1241	1-218-871-11	s	RESISTOR,CHIP 10K 1/10W (1608)
R1242	1-218-855-11	s	RESISTOR,CHIP 2.2K 1/10W(1608)
R1246	1-218-855-11	s	RESISTOR,CHIP 2.2K 1/10W(1608)
R1247	1-211-985-11	s	RESISTOR,CHIP 47 1/10W (1608)
R1248	1-211-985-11	s	RESISTOR,CHIP 47 1/10W (1608)
R1249	1-218-871-11	s	RESISTOR,CHIP 10K 1/10W (1608)
R1250	1-218-870-11	s	RESISTOR,CHIP 9.1K 1/10W(1608)
R1250	1-218-870-11	s	RESISTOR,CHIP 9.1K 1/10W(1608)
R1251	1-211-985-11	s	RESISTOR,CHIP 47 1/10W (1608)
R1252	1-218-831-11	s	RESISTOR, CHIP 220 1/10W(1608)
R1253	1-218-831-11	s	RESISTOR, CHIP 220 1/10W(1608)
R1267 *2	1-211-737-11	s	RESISTOR 0.47 1/4W (3225)
R1268	1-218-895-11	s	RESISTOR,CHIP 100K 1/10W(1608)

(DM-123/P BOARD [SUFFIX 15-])

Ref. No. or Q'ty	Part No.	SP	Description
R1269 *2	1-211-737-11	s	RESISTOR 0.47 1/4W (3225)
R1301	1-216-864-11	s	CONDUCTOR, CHIP (1608)
R1302 *2	1-211-977-11	s	RESISTOR,CHIP 22 1/10W (1608)
R1306	1-218-863-11	s	RESISTOR,CHIP 4.7K 1/10W(1608)
R1307	1-218-879-11	s	RESISTOR,CHIP 22K 1/10W (1608)
R1308	1-218-869-11	s	RESISTOR,CHIP 8.2K 1/10W(1608)
R1309	1-218-871-11	s	RESISTOR,CHIP 10K 1/10W (1608)
R1310	1-218-881-11	s	RESISTOR, CHIP 27K 1/10W(1608)
R1311	1-211-985-11	s	RESISTOR,CHIP 47 1/10W (1608)
R1312	1-218-849-11	s	RESISTOR,CHIP 1.2K 1/10W(1608)
R1313	1-218-823-11	s	RESISTOR,CHIP 100 1/10W (1608)
R1314	1-218-855-11	s	RESISTOR,CHIP 2.2K 1/10W(1608)
R1315	1-218-831-11	s	RESISTOR, CHIP 220 1/10W(1608)
R1316	1-218-847-11	s	RESISTOR, CHIP 1K 1/10W (1608)
R1317	1-218-855-11	s	RESISTOR,CHIP 2.2K 1/10W(1608)
R1318	1-218-839-11	s	RESISTOR,CHIP 470 1/10W (1608)
R1319	1-218-871-11	s	RESISTOR,CHIP 10K 1/10W (1608)
R1320	1-218-871-11	s	RESISTOR,CHIP 10K 1/10W (1608)
R1321	1-218-883-11	s	RESISTOR,CHIP 33K 1/10W (1608)
R1322	1-218-883-11	s	RESISTOR,CHIP 33K 1/10W (1608)
R1323	1-216-864-11	s	CONDUCTOR, CHIP (1608)
R1324	1-218-871-11	s	RESISTOR,CHIP 10K 1/10W (1608)
R1325	1-218-879-11	s	RESISTOR,CHIP 22K 1/10W (1608)
R1326	1-218-879-11	s	RESISTOR,CHIP 22K 1/10W (1608)
R1327	1-218-831-11	s	RESISTOR, CHIP 220 1/10W(1608)
R1328	1-218-895-11	s	RESISTOR,CHIP 100K 1/10W(1608)
R1329	1-218-871-11	s	RESISTOR,CHIP 10K 1/10W (1608)
R1330	1-218-895-11	s	RESISTOR,CHIP 100K 1/10W(1608)
R1332	1-218-823-11	s	RESISTOR,CHIP 100 1/10W (1608)
R1333	1-218-823-11	s	RESISTOR,CHIP 100 1/10W (1608)
R1334	1-218-855-11	s	RESISTOR,CHIP 2.2K 1/10W(1608)
R1335	1-218-823-11	s	RESISTOR,CHIP 100 1/10W (1608)
R1336	1-218-823-11	s	RESISTOR,CHIP 100 1/10W (1608)
R1337	1-218-823-11	s	RESISTOR,CHIP 100 1/10W (1608)
R1338	1-218-879-11	s	RESISTOR,CHIP 22K 1/10W (1608)
R1339	1-218-885-11	s	RESISTOR,CHIP 39K 1/10W (1608)
R1340	1-218-871-11	s	RESISTOR,CHIP 10K 1/10W (1608)
R1341	1-218-871-11	s	RESISTOR,CHIP 10K 1/10W (1608)
R1342	1-218-871-11	s	RESISTOR,CHIP 10K 1/10W (1608)
R1343	1-218-869-11	s	RESISTOR,CHIP 8.2K 1/10W(1608)
R1344	1-218-855-11	s	RESISTOR,CHIP 2.2K 1/10W(1608)
R1345	1-218-839-11	s	RESISTOR,CHIP 470 1/10W (1608)
R1346	1-218-871-11	s	RESISTOR,CHIP 10K 1/10W (1608)
R1349	1-218-839-11	s	RESISTOR,CHIP 470 1/10W (1608)
R1350	1-216-863-11	s	RESISTOR,CHIP 3.3M 1/16W 1608
R1351	1-218-857-11	s	RESISTOR,CHIP 2.7K 1/10W(1608)
R1352	1-218-841-11	s	RESISTOR,CHIP 560 1/10W (1608)
R1353	1-218-863-11	s	RESISTOR,CHIP 4.7K 1/10W(1608)
R1354	1-218-839-11	s	RESISTOR,CHIP 470 1/10W (1608)
R1355	1-218-831-11	s	RESISTOR, CHIP 220 1/10W(1608)
R1356	1-218-831-11	s	RESISTOR, CHIP 220 1/10W(1608)
R1357	1-218-831-11	s	RESISTOR, CHIP 220 1/10W(1608)
R1358	1-216-863-11	s	RESISTOR,CHIP 3.3M 1/16W 1608
R1359	1-218-871-11	s	RESISTOR,CHIP 10K 1/10W (1608)
R1360	1-218-856-11	s	RESISTOR,CHIP 2.4K 1/10W(1608)
R1361	1-211-989-11	s	RESISTOR,CHIP 68 1/10W (1608)
R1362	1-218-847-11	s	RESISTOR, CHIP 1K 1/10W (1608)
R1363	1-218-877-11	s	RESISTOR,CHIP 18K 1/10W (1608)
R1364	1-218-872-11	s	RESISTOR,CHIP 11K 1/10W (1608)

(DM-123/P BOARD [SUFFIX 15-])

Ref. No. or Q'ty	Part No.	SP	Description
R1367	1-218-855-11	s	RESISTOR,CHIP 2.2K 1/10W(1608)
R1368	1-218-849-11	s	RESISTOR,CHIP 1.2K 1/10W(1608)
R1369	1-218-863-11	s	RESISTOR,CHIP 4.7K 1/10W(1608)
R1370	1-216-857-11	s	RESISTOR,CHIP 1M 1/10W(1608)
R1371	1-218-823-11	s	RESISTOR,CHIP 100 1/10W (1608)
R1372	1-218-831-11	s	RESISTOR, CHIP 220 1/10W(1608)
R1373	1-218-877-11	s	RESISTOR,CHIP 18K 1/10W (1608)
R1374	1-218-847-11	s	RESISTOR, CHIP 1K 1/10W (1608)
R1375	1-218-871-11	s	RESISTOR,CHIP 10K 1/10W (1608)
R1376	1-218-859-11	s	RESISTOR,CHIP 3.3K 1/10W(1608)
R1377	1-218-871-11	s	RESISTOR,CHIP 10K 1/10W (1608)
R1378	1-218-855-11	s	RESISTOR,CHIP 2.2K 1/10W(1608)
R1379	1-218-873-11	s	RESISTOR,CHIP 12K 1/10W (1608)
R1380	1-218-823-11	s	RESISTOR,CHIP 100 1/10W (1608)
R1381	1-218-831-11	s	RESISTOR, CHIP 220 1/10W(1608)
R1382	1-218-842-11	s	RESISTOR,CHIP 620 1/10W (1608)
R1383	1-218-831-11	s	RESISTOR, CHIP 220 1/10W(1608)
R1384	1-218-855-11	s	RESISTOR,CHIP 2.2K 1/10W(1608)
R1385	1-218-855-11	s	RESISTOR,CHIP 2.2K 1/10W(1608)
R1386	1-218-831-11	s	RESISTOR, CHIP 220 1/10W(1608)
R1387	1-218-835-11	s	RESISTOR,CHIP 330 1/10W (1608)
R1388	1-218-859-11	s	RESISTOR,CHIP 3.3K 1/10W(1608)
R1390	1-218-858-11	s	RESISTOR, CHIP 3K 1/10W (1608)
R1391	1-218-873-11	s	RESISTOR,CHIP 12K 1/10W (1608)
R1392	1-218-887-11	s	RESISTOR,CHIP 47K 1/10W (1608)
R1393	1-218-887-11	s	RESISTOR,CHIP 47K 1/10W (1608)
R1394	1-218-855-11	s	RESISTOR,CHIP 2.2K 1/10W(1608)
R1395	1-218-855-11	s	RESISTOR,CHIP 2.2K 1/10W(1608)
R1396	1-218-859-11	s	RESISTOR,CHIP 3.3K 1/10W(1608)
R1397	1-218-859-11	s	RESISTOR,CHIP 3.3K 1/10W(1608)
R1398	1-218-907-11	s	RESISTOR,CHIP 330K 1/10W(1608)
R1399	1-218-855-11	s	RESISTOR,CHIP 2.2K 1/10W(1608)
R1401	1-218-871-11	s	RESISTOR,CHIP 10K 1/10W (1608)
R1402	1-218-871-11	s	RESISTOR,CHIP 10K 1/10W (1608)
R1403 *2	1-218-907-11	s	RESISTOR,CHIP 330K 1/10W(1608)
R1404	1-218-891-11	s	RESISTOR,CHIP 68K 1/10W (1608)
R1405 *2	1-218-863-11	s	RESISTOR,CHIP 4.7K 1/10W(1608)
R1406	1-218-823-11	s	RESISTOR,CHIP 100 1/10W (1608)
R1410	1-218-877-11	s	RESISTOR,CHIP 18K 1/10W (1608)
R1411 *2	1-218-911-11	s	RESISTOR,CHIP 470K 1/10W(1608)
R1412	1-218-855-11	s	RESISTOR,CHIP 2.2K 1/10W(1608)
R1423 *3	1-216-864-11	s	CONDUCTOR, CHIP (1608)
*1	1-218-831-11	s	RESISTOR, CHIP 220 1/10W(1608)
R1424	1-218-831-11	s	RESISTOR, CHIP 220 1/10W(1608)
R1425	1-211-985-11	s	RESISTOR,CHIP 47 1/10W (1608)
R1426	1-216-864-11	s	CONDUCTOR, CHIP (1608)
R1428	1-211-985-11	s	RESISTOR,CHIP 47 1/10W (1608)
R1429	1-218-823-11	s	RESISTOR,CHIP 100 1/10W (1608)
R1435	1-218-823-11	s	RESISTOR,CHIP 100 1/10W (1608)
R1436	1-218-823-11	s	RESISTOR,CHIP 100 1/10W (1608)
R1438	1-218-870-11	s	RESISTOR,CHIP 9.1K 1/10W(1608)
R1439	1-218-868-11	s	RESISTOR,CHIP 7.5K 1/10W(1608)
R1443	1-218-867-11	s	RESISTOR,CHIP 6.8K 1/10W(1608)
R1446	1-216-864-11	s	CONDUCTOR, CHIP (1608)
R1447	1-216-864-11	s	CONDUCTOR, CHIP (1608)
R1449	1-218-860-11	s	RESISTOR,CHIP 3.6K 1/10W(1608)
R1450	1-218-865-11	s	RESISTOR,CHIP 5.6K 1/10W(1608)
R1452	1-218-871-11	s	RESISTOR,CHIP 10K 1/10W (1608)
R1453	1-218-871-11	s	RESISTOR,CHIP 10K 1/10W (1608)

(DM-123/P BOARD [SUFFIX 15-])

Ref. No. or Q'ty	Part No.	SP	Description
R1456	1-218-871-11	s	RESISTOR,CHIP 10K 1/10W (1608)
R1467	1-218-871-11	s	RESISTOR,CHIP 10K 1/10W (1608)
R1468	1-218-887-11	s	RESISTOR,CHIP 47K 1/10W (1608)
R1470	1-216-864-11	s	CONDUCTOR, CHIP (1608)
R1471	1-218-915-11	s	RESISTOR,CHIP 680K 1/10W(1608)
R1472 *2	1-218-895-11	s	RESISTOR,CHIP 100K 1/10W(1608)
*1	1-218-879-11	s	RESISTOR,CHIP 22K 1/10W (1608)
R1473 *2	1-218-895-11	s	RESISTOR,CHIP 100K 1/10W(1608)
*1	1-218-878-11	s	RESISTOR,CHIP 20K 1/10W (1608)
R1480	1-218-871-11	s	RESISTOR,CHIP 10K 1/10W (1608)
R1481	1-218-859-11	s	RESISTOR,CHIP 3.3K 1/10W(1608)
R1482	1-218-847-11	s	RESISTOR, CHIP 1K 1/10W (1608)
R1483	1-218-847-11	s	RESISTOR, CHIP 1K 1/10W (1608)
R1484	1-218-847-11	s	RESISTOR, CHIP 1K 1/10W (1608)
R1485	1-218-835-11	s	RESISTOR,CHIP 330 1/10W (1608)
R1486	1-218-859-11	s	RESISTOR,CHIP 3.3K 1/10W(1608)
R1487	1-218-879-11	s	RESISTOR,CHIP 22K 1/10W (1608)
R1488	1-218-880-11	s	RESISTOR,CHIP 24K 1/10W (1608)
R1489	1-218-854-11	s	RESISTOR,CHIP 2K 1/10W (1608)
R1490	1-218-863-11	s	RESISTOR,CHIP 4.7K 1/10W(1608)
R1491	1-218-854-11	s	RESISTOR,CHIP 2K 1/10W (1608)
R1492	1-218-847-11	s	RESISTOR, CHIP 1K 1/10W (1608)
R1493	1-216-864-11	s	CONDUCTOR, CHIP (1608)
R1494	1-218-863-11	s	RESISTOR,CHIP 4.7K 1/10W(1608)
R1495	1-211-985-11	s	RESISTOR,CHIP 47 1/10W (1608)
R1496	1-218-887-11	s	RESISTOR,CHIP 47K 1/10W (1608)
R1497	1-218-879-11	s	RESISTOR,CHIP 22K 1/10W (1608)
R1498	1-218-884-11	s	RESISTOR,CHIP 36K 1/10W (1608)
R1505	1-218-879-11	s	RESISTOR,CHIP 22K 1/10W (1608)
R1506	1-218-869-11	s	RESISTOR,CHIP 8.2K 1/10W(1608)
R1507	1-211-985-11	s	RESISTOR,CHIP 47 1/10W (1608)
R1508	1-218-871-11	s	RESISTOR,CHIP 10K 1/10W (1608)
R1509	1-218-881-11	s	RESISTOR, CHIP 27K 1/10W(1608)
R1510	1-218-847-11	s	RESISTOR, CHIP 1K 1/10W (1608)
R1511	1-218-823-11	s	RESISTOR,CHIP 100 1/10W (1608)
R1512	1-218-855-11	s	RESISTOR,CHIP 2.2K 1/10W(1608)
R1513	1-218-831-11	s	RESISTOR, CHIP 220 1/10W(1608)
R1514	1-218-847-11	s	RESISTOR, CHIP 1K 1/10W (1608)
R1515	1-218-855-11	s	RESISTOR,CHIP 2.2K 1/10W(1608)
R1516	1-218-839-11	s	RESISTOR,CHIP 470 1/10W (1608)
R1517	1-218-871-11	s	RESISTOR,CHIP 10K 1/10W (1608)
R1518	1-218-871-11	s	RESISTOR,CHIP 10K 1/10W (1608)
R1519	1-218-883-11	s	RESISTOR,CHIP 33K 1/10W (1608)
R1520	1-218-883-11	s	RESISTOR,CHIP 33K 1/10W (1608)
R1521	1-216-864-11	s	CONDUCTOR, CHIP (1608)
R1522	1-218-887-11	s	RESISTOR,CHIP 47K 1/10W (1608)
R1523	1-216-864-11	s	CONDUCTOR, CHIP (1608)
R1524	1-218-871-11	s	RESISTOR,CHIP 10K 1/10W (1608)
R1525	1-218-879-11	s	RESISTOR,CHIP 22K 1/10W (1608)
R1526	1-218-879-11	s	RESISTOR,CHIP 22K 1/10W (1608)
R1527	1-218-823-11	s	RESISTOR,CHIP 100 1/10W (1608)
R1528	1-218-895-11	s	RESISTOR,CHIP 100K 1/10W(1608)
R1529	1-218-871-11	s	RESISTOR,CHIP 10K 1/10W (1608)
R1530	1-218-895-11	s	RESISTOR,CHIP 100K 1/10W(1608)
R1531	1-216-864-11	s	CONDUCTOR, CHIP (1608)
R1533	1-218-823-11	s	RESISTOR,CHIP 100 1/10W (1608)
R1535	1-218-823-11	s	RESISTOR,CHIP 100 1/10W (1608)
R1536	1-218-823-11	s	RESISTOR,CHIP 100 1/10W (1608)
R1537	1-218-855-11	s	RESISTOR,CHIP 2.2K 1/10W(1608)

(DM-123/P BOARD [SUFFIX 15-])

Ref. No. or Q'ty	Part No.	SP	Description
R1538	1-218-885-11	s	RESISTOR,CHIP 39K 1/10W (1608)
R1539	1-218-871-11	s	RESISTOR,CHIP 10K 1/10W (1608)
R1541	1-218-878-11	s	RESISTOR,CHIP 20K 1/10W (1608)
R1542	1-218-879-11	s	RESISTOR,CHIP 22K 1/10W (1608)
R1546	1-218-871-11	s	RESISTOR,CHIP 10K 1/10W (1608)
R1547	1-218-878-11	s	RESISTOR,CHIP 20K 1/10W (1608)
R1548	1-218-871-11	s	RESISTOR,CHIP 10K 1/10W (1608)
R1549	1-218-871-11	s	RESISTOR,CHIP 10K 1/10W (1608)
R1550	1-216-864-11	s	CONDUCTOR, CHIP (1608)
R1551	1-218-865-11	s	RESISTOR,CHIP 5.6K 1/10W(1608)
R1552	1-218-875-11	s	RESISTOR,CHIP 15K 1/10W (1608)
R1553	1-218-871-11	s	RESISTOR,CHIP 10K 1/10W (1608)
R1554	1-218-873-11	s	RESISTOR,CHIP 12K 1/10W (1608)
R1555	1-218-823-11	s	RESISTOR,CHIP 100 1/10W (1608)
R1556 *N	1-218-903-11	s	RESISTOR,CHIP 220K 1/10W(1608)
*P	1-218-895-11	s	RESISTOR,CHIP 100K 1/10W(1608)
R1557	1-218-831-11	s	RESISTOR, CHIP 220 1/10W(1608)
R1559	1-218-855-11	s	RESISTOR,CHIP 2.2K 1/10W(1608)
R1560	1-218-839-11	s	RESISTOR,CHIP 470 1/10W (1608)
R1561	1-218-871-11	s	RESISTOR,CHIP 10K 1/10W (1608)
R1562	1-218-867-11	s	RESISTOR,CHIP 6.8K 1/10W(1608)
R1563	1-218-839-11	s	RESISTOR,CHIP 470 1/10W (1608)
R1564	1-218-874-11	s	RESISTOR,CHIP 13K 1/10W (1608)
R1565	1-218-877-11	s	RESISTOR,CHIP 18K 1/10W (1608)
R1566	1-218-866-11	s	RESISTOR,CHIP 6.2K 1/10W(1608)
R1567	1-216-863-11	s	RESISTOR,CHIP 3.3M 1/16W 1608
R1568	1-218-839-11	s	RESISTOR,CHIP 470 1/10W (1608)
R1571	1-218-831-11	s	RESISTOR, CHIP 220 1/10W(1608)
R1572	1-218-831-11	s	RESISTOR, CHIP 220 1/10W(1608)
R1575	1-218-831-11	s	RESISTOR, CHIP 220 1/10W(1608)
R1576	1-218-915-11	s	RESISTOR,CHIP 680K 1/10W(1608)
R1578 *N	1-218-858-11	s	RESISTOR, CHIP 3K 1/10W (1608)
*P	1-218-857-11	s	RESISTOR,CHIP 2.7K 1/10W(1608)
R1579 *N	1-211-987-11	s	RESISTOR,CHIP 56 1/10W (1608)
*P	1-211-991-11	s	RESISTOR,CHIP 82 1/10W (1608)
R1580	1-218-847-11	s	RESISTOR, CHIP 1K 1/10W (1608)
R1583 *N	1-218-857-11	s	RESISTOR,CHIP 2.7K 1/10W(1608)
*P	1-218-856-11	s	RESISTOR,CHIP 2.4K 1/10W(1608)
R1584	1-218-851-11	s	RESISTOR,CHIP 1.5K 1/10W(1608)
R1585	1-216-857-11	s	RESISTOR,CHIP 1M 1/10W(1608)
R1586	1-218-863-11	s	RESISTOR,CHIP 4.7K 1/10W(1608)
R1587	1-218-839-11	s	RESISTOR,CHIP 470 1/10W (1608)
R1588	1-218-831-11	s	RESISTOR, CHIP 220 1/10W(1608)
R1590	1-218-859-11	s	RESISTOR,CHIP 3.3K 1/10W(1608)
R1591	1-218-871-11	s	RESISTOR,CHIP 10K 1/10W (1608)
R1592	1-218-871-11	s	RESISTOR,CHIP 10K 1/10W (1608)
R1593	1-218-855-11	s	RESISTOR,CHIP 2.2K 1/10W(1608)
R1594	1-218-873-11	s	RESISTOR,CHIP 12K 1/10W (1608)
R1595	1-218-831-11	s	RESISTOR, CHIP 220 1/10W(1608)
R1596	1-218-831-11	s	RESISTOR, CHIP 220 1/10W(1608)
R1597	1-218-835-11	s	RESISTOR,CHIP 330 1/10W (1608)
R1598	1-218-823-11	s	RESISTOR,CHIP 100 1/10W (1608)
R1599	1-218-859-11	s	RESISTOR,CHIP 3.3K 1/10W(1608)
R1600	1-218-831-11	s	RESISTOR, CHIP 220 1/10W(1608)
R1601	1-218-835-11	s	RESISTOR,CHIP 330 1/10W (1608)
R1602	1-218-859-11	s	RESISTOR,CHIP 3.3K 1/10W(1608)
R1603	1-218-855-11	s	RESISTOR,CHIP 2.2K 1/10W(1608)
R1605	1-218-858-11	s	RESISTOR, CHIP 3K 1/10W (1608)
R1606	1-218-873-11	s	RESISTOR,CHIP 12K 1/10W (1608)

(DM-123/P BOARD [SUFFIX 15-])

Ref. No. or Q'ty	Part No.	SP	Description
R1607	1-218-887-11	s	RESISTOR,CHIP 47K 1/10W (1608)
R1608	1-218-887-11	s	RESISTOR,CHIP 47K 1/10W (1608)
R1609	1-218-855-11	s	RESISTOR,CHIP 2.2K 1/10W(1608)
R1610	1-218-855-11	s	RESISTOR,CHIP 2.2K 1/10W(1608)
R1611	1-218-859-11	s	RESISTOR,CHIP 3.3K 1/10W(1608)
R1612	1-218-907-11	s	RESISTOR,CHIP 330K 1/10W(1608)
R1614	1-218-855-11	s	RESISTOR,CHIP 2.2K 1/10W(1608)
R1623 *N	1-218-857-11	s	RESISTOR,CHIP 2.7K 1/10W(1608)
*P	1-218-871-11	s	RESISTOR,CHIP 10K 1/10W (1608)
R1626	1-218-863-11	s	RESISTOR,CHIP 4.7K 1/10W(1608)
R1637 *3	1-216-864-11	s	CONDUCTOR, CHIP (1608)
*1	1-218-831-11	s	RESISTOR, CHIP 220 1/10W(1608)
R1638	1-218-831-11	s	RESISTOR, CHIP 220 1/10W(1608)
R1639	1-211-985-11	s	RESISTOR,CHIP 47 1/10W (1608)
R1640	1-211-985-11	s	RESISTOR,CHIP 47 1/10W (1608)
R1645	1-218-823-11	s	RESISTOR,CHIP 100 1/10W (1608)
R1649	1-218-863-11	s	RESISTOR,CHIP 4.7K 1/10W(1608)
R1680	1-218-871-11	s	RESISTOR,CHIP 10K 1/10W (1608)
R1681	1-218-859-11	s	RESISTOR,CHIP 3.3K 1/10W(1608)
R1682	1-218-847-11	s	RESISTOR, CHIP 1K 1/10W (1608)
R1683	1-218-847-11	s	RESISTOR, CHIP 1K 1/10W (1608)
R1684	1-218-847-11	s	RESISTOR, CHIP 1K 1/10W (1608)
R1685	1-218-835-11	s	RESISTOR,CHIP 330 1/10W (1608)
R1686	1-218-859-11	s	RESISTOR,CHIP 3.3K 1/10W(1608)
R1687	1-218-879-11	s	RESISTOR,CHIP 22K 1/10W (1608)
R1688	1-218-880-11	s	RESISTOR,CHIP 24K 1/10W (1608)
R1689	1-218-854-11	s	RESISTOR,CHIP 2K 1/10W (1608)
R1690	1-218-863-11	s	RESISTOR,CHIP 4.7K 1/10W(1608)
R1691	1-218-854-11	s	RESISTOR,CHIP 2K 1/10W (1608)
R1692	1-218-847-11	s	RESISTOR, CHIP 1K 1/10W (1608)
R1693	1-216-864-11	s	CONDUCTOR, CHIP (1608)
R1694	1-218-863-11	s	RESISTOR,CHIP 4.7K 1/10W(1608)
R1695	1-211-985-11	s	RESISTOR,CHIP 47 1/10W (1608)
R1696	1-218-859-11	s	RESISTOR,CHIP 3.3K 1/10W(1608)
R1697	1-218-891-11	s	RESISTOR,CHIP 68K 1/10W (1608)
R1698	1-218-868-11	s	RESISTOR,CHIP 7.5K 1/10W(1608)
R1699	1-218-823-11	s	RESISTOR,CHIP 100 1/10W (1608)
R1702	1-211-985-11	s	RESISTOR,CHIP 47 1/10W (1608)
R1703	1-211-985-11	s	RESISTOR,CHIP 47 1/10W (1608)
R1704	1-211-985-11	s	RESISTOR,CHIP 47 1/10W (1608)
R1705	1-211-985-11	s	RESISTOR,CHIP 47 1/10W (1608)
R1706	1-218-823-11	s	RESISTOR,CHIP 100 1/10W (1608)
R1707	1-218-823-11	s	RESISTOR,CHIP 100 1/10W (1608)
R1711	1-211-985-11	s	RESISTOR,CHIP 47 1/10W (1608)
R1712	1-211-985-11	s	RESISTOR,CHIP 47 1/10W (1608)
R1713	1-211-985-11	s	RESISTOR,CHIP 47 1/10W (1608)
R1714	1-211-985-11	s	RESISTOR,CHIP 47 1/10W (1608)
R1715	1-211-985-11	s	RESISTOR,CHIP 47 1/10W (1608)
R1716	1-211-985-11	s	RESISTOR,CHIP 47 1/10W (1608)
R1717	1-216-864-11	s	CONDUCTOR, CHIP (1608)
R1719	1-218-823-11	s	RESISTOR,CHIP 100 1/10W (1608)
R1721	1-216-864-11	s	CONDUCTOR, CHIP (1608)
R1722	1-216-864-11	s	CONDUCTOR, CHIP (1608)
R1723	1-218-855-11	s	RESISTOR,CHIP 2.2K 1/10W(1608)
R1724	1-218-823-11	s	RESISTOR,CHIP 100 1/10W (1608)
R1725	1-218-895-11	s	RESISTOR,CHIP 100K 1/10W(1608)
R1726	1-218-895-11	s	RESISTOR,CHIP 100K 1/10W(1608)
R1727	1-211-985-11	s	RESISTOR,CHIP 47 1/10W (1608)
R1728	1-211-985-11	s	RESISTOR,CHIP 47 1/10W (1608)

(DM-123/P BOARD [SUFFIX 15-])

Ref. No. or Q'ty	Part No.	SP	Description
R1731	1-218-823-11	s	RESISTOR,CHIP 100 1/10W (1608)
R1732	1-218-823-11	s	RESISTOR,CHIP 100 1/10W (1608)
R1733	1-218-855-11	s	RESISTOR,CHIP 2.2K 1/10W(1608)
R1734	1-218-895-11	s	RESISTOR,CHIP 100K 1/10W(1608)
R1735	1-216-864-11	s	CONDUCTOR, CHIP (1608)
R1736	1-216-864-11	s	CONDUCTOR, CHIP (1608)
R1737	1-218-891-11	s	RESISTOR,CHIP 68K 1/10W (1608)
R1738	1-218-863-11	s	RESISTOR,CHIP 4.7K 1/10W(1608)
R1744	1-216-864-11	s	CONDUCTOR, CHIP (1608)
R1745	1-216-864-11	s	CONDUCTOR, CHIP (1608)
R1801 *2	1-218-895-11	s	RESISTOR,CHIP 100K 1/10W(1608)
*1	1-218-855-11	s	RESISTOR,CHIP 2.2K 1/10W(1608)
R1802	1-218-895-11	s	RESISTOR,CHIP 100K 1/10W(1608)
R1803	1-218-871-11	s	RESISTOR,CHIP 10K 1/10W (1608)
R1804	1-218-855-11	s	RESISTOR,CHIP 2.2K 1/10W(1608)
R1807	1-216-864-11	s	CONDUCTOR, CHIP (1608)
R1813	1-218-855-11	s	RESISTOR,CHIP 2.2K 1/10W(1608)
R1814	1-218-847-11	s	RESISTOR, CHIP 1K 1/10W (1608)
R1815	1-218-855-11	s	RESISTOR,CHIP 2.2K 1/10W(1608)
R1816	1-211-985-11	s	RESISTOR,CHIP 47 1/10W (1608)
R1817	1-218-823-11	s	RESISTOR,CHIP 100 1/10W (1608)
R1818	1-218-855-11	s	RESISTOR,CHIP 2.2K 1/10W(1608)
R1819	1-218-863-11	s	RESISTOR,CHIP 4.7K 1/10W(1608)
R1820	1-218-887-11	s	RESISTOR,CHIP 47K 1/10W (1608)
R1821	1-218-871-11	s	RESISTOR,CHIP 10K 1/10W (1608)
R1822	1-216-864-11	s	CONDUCTOR, CHIP (1608)
R1824	1-218-839-11	s	RESISTOR,CHIP 470 1/10W (1608)
R1828	1-218-847-11	s	RESISTOR, CHIP 1K 1/10W (1608)
R1829 *N	1-218-732-11	s	RESISTOR,CHIP 47K 1/16W(1608)
R1830 *P	1-218-887-11	s	RESISTOR,CHIP 47K 1/10W (1608)
R1831	1-218-843-11	s	RESISTOR,CHIP 680 1/10W (1608)
R1832	1-218-843-11	s	RESISTOR,CHIP 680 1/10W (1608)
R1833	1-218-847-11	s	RESISTOR, CHIP 1K 1/10W (1608)
R1834	1-218-823-11	s	RESISTOR,CHIP 100 1/10W (1608)
R1835	1-218-847-11	s	RESISTOR, CHIP 1K 1/10W (1608)
R1836	1-218-831-11	s	RESISTOR, CHIP 220 1/10W(1608)
R1837 *N	1-216-864-11	s	RESISTOR,CHIP 0 1/16W (1608)
R1841	1-218-855-11	s	RESISTOR,CHIP 2.2K 1/10W(1608)
R1842	1-218-855-11	s	RESISTOR,CHIP 2.2K 1/10W(1608)
R1844	1-218-895-11	s	RESISTOR,CHIP 100K 1/10W(1608)
R1845	1-218-871-11	s	RESISTOR,CHIP 10K 1/10W (1608)
R1846	1-218-855-11	s	RESISTOR,CHIP 2.2K 1/10W(1608)
R1847	1-218-871-11	s	RESISTOR,CHIP 10K 1/10W (1608)
R1849	1-218-895-11	s	RESISTOR,CHIP 100K 1/10W(1608)
R1856	1-218-895-11	s	RESISTOR,CHIP 100K 1/10W(1608)
R1858	1-218-895-11	s	RESISTOR,CHIP 100K 1/10W(1608)
R1861	1-218-871-11	s	RESISTOR,CHIP 10K 1/10W (1608)
R1862	1-218-871-11	s	RESISTOR,CHIP 10K 1/10W (1608)
R1867	1-218-887-11	s	RESISTOR,CHIP 47K 1/10W (1608)
R1868	1-218-847-11	s	RESISTOR, CHIP 1K 1/10W (1608)
R1869	1-218-847-11	s	RESISTOR, CHIP 1K 1/10W (1608)
R1870	1-218-863-11	s	RESISTOR,CHIP 4.7K 1/10W(1608)
R1871	1-218-887-11	s	RESISTOR,CHIP 47K 1/10W (1608)
R1873	1-218-887-11	s	RESISTOR,CHIP 47K 1/10W (1608)
R1875	1-218-887-11	s	RESISTOR,CHIP 47K 1/10W (1608)
R1878	1-218-875-11	s	RESISTOR,CHIP 15K 1/10W (1608)
R1879	1-218-868-11	s	RESISTOR,CHIP 7.5K 1/10W(1608)
R1881	1-218-875-11	s	RESISTOR,CHIP 15K 1/10W (1608)
R1882	1-218-855-11	s	RESISTOR,CHIP 2.2K 1/10W(1608)

(DM-123/P BOARD [SUFFIX 15-])

Ref. No. or Q'ty	Part No.	SP	Description
R1883 *N	1-218-865-11	s	RESISTOR,CHIP 5.6K 1/10W(1608)
*P	1-218-861-11	s	RESISTOR,CHIP 3.9K 1/10W(1608)
R1884	1-218-855-11	s	RESISTOR,CHIP 2.2K 1/10W(1608)
R1885	1-218-855-11	s	RESISTOR,CHIP 2.2K 1/10W(1608)
R1886	1-211-985-11	s	RESISTOR,CHIP 47 1/10W (1608)
R1887	1-218-847-11	s	RESISTOR, CHIP 1K 1/10W (1608)
R1888	1-218-911-11	s	RESISTOR,CHIP 470K 1/10W(1608)
R1889	1-218-903-11	s	RESISTOR,CHIP 220K 1/10W(1608)
R1890	1-218-871-11	s	RESISTOR,CHIP 10K 1/10W (1608)
R1891	1-218-879-11	s	RESISTOR,CHIP 22K 1/10W (1608)
R1892	1-218-871-11	s	RESISTOR,CHIP 10K 1/10W (1608)
R1894	1-211-985-11	s	RESISTOR,CHIP 47 1/10W (1608)
R1896	1-218-871-11	s	RESISTOR,CHIP 10K 1/10W (1608)
R1897	1-218-823-11	s	RESISTOR,CHIP 100 1/10W (1608)
R1898	1-218-847-11	s	RESISTOR, CHIP 1K 1/10W (1608)
R1901	1-218-855-11	s	RESISTOR,CHIP 2.2K 1/10W(1608)
R1902	1-218-855-11	s	RESISTOR,CHIP 2.2K 1/10W(1608)
R1903	1-218-855-11	s	RESISTOR,CHIP 2.2K 1/10W(1608)
R1906	1-218-871-11	s	RESISTOR,CHIP 10K 1/10W (1608)
R1907	1-218-861-11	s	RESISTOR,CHIP 3.9K 1/10W(1608)
R1908	1-218-861-11	s	RESISTOR,CHIP 3.9K 1/10W(1608)
R1909	1-218-823-11	s	RESISTOR,CHIP 100 1/10W (1608)
R1910	1-218-861-11	s	RESISTOR,CHIP 3.9K 1/10W(1608)
R1911	1-218-847-11	s	RESISTOR, CHIP 1K 1/10W (1608)
R1912	1-218-847-11	s	RESISTOR, CHIP 1K 1/10W (1608)
R1913 *2	1-218-893-11	s	RESISTOR, CHIP 82K 1/10W(1608)
*1	1-218-878-11	s	RESISTOR,CHIP 20K 1/10W (1608)
R1914	1-218-885-11	s	RESISTOR,CHIP 39K 1/10W (1608)
R1917	1-218-855-11	s	RESISTOR,CHIP 2.2K 1/10W(1608)
R1925	1-218-895-11	s	RESISTOR,CHIP 100K 1/10W(1608)
R1926	1-216-864-11	s	CONDUCTOR, CHIP (1608)
R1928	1-218-887-11	s	RESISTOR,CHIP 47K 1/10W (1608)
R1931	1-218-887-11	s	RESISTOR,CHIP 47K 1/10W (1608)
R1933	1-216-864-11	s	CONDUCTOR, CHIP (1608)
R1934 *2	1-218-883-11	s	RESISTOR,CHIP 33K 1/10W (1608)
*1	1-218-868-11	s	RESISTOR,CHIP 7.5K 1/10W(1608)
R1936 *3	1-216-864-11	s	CONDUCTOR, CHIP (1608)
RB901	1-233-576-11	s	RESISTOR,CHIP NETWORK 100
RB902	1-233-810-21	s	RES, NETWORK 100K (3216)
RB903	1-233-576-11	s	RESISTOR,CHIP NETWORK 100
RB904	1-233-576-11	s	RESISTOR,CHIP NETWORK 100
RB907	1-233-810-21	s	RES, NETWORK 100K (3216)
RB908	1-233-810-21	s	RES, NETWORK 100K (3216)
RB1301	1-233-576-11	s	RESISTOR,CHIP NETWORK 100
RB1302	1-233-576-11	s	RESISTOR,CHIP NETWORK 100
RB1501	1-233-576-11	s	RESISTOR,CHIP NETWORK 100
RB1601	1-233-576-11	s	RESISTOR,CHIP NETWORK 100
RB1801	1-233-411-11	s	RESISTOR,CHIP NETWORK 220/3216
RB1802	1-233-411-11	s	RESISTOR,CHIP NETWORK 220/3216
RB1803	1-233-413-11	s	RESISTOR,CHIP NETWORK 2.2K
RB1804	1-233-810-21	s	RES, NETWORK 100K (3216)
RB1805	1-233-576-11	s	RESISTOR,CHIP NETWORK 100
RB1806	1-233-576-11	s	RESISTOR,CHIP NETWORK 100
RV101	1-225-788-21	s	RES, ADJ, CERMET 1K
RV102	1-225-788-21	s	RES, ADJ, CERMET 1K
RV104	1-225-788-21	s	RES, ADJ, CERMET 1K
RV109 *N	1-225-787-21	s	RES, ADJ, CERMET 500
*P	1-225-786-11	s	RES, ADJ, CERMET 200
RV110	1-225-786-11	s	RES, ADJ, CERMET 200

(DM-123/P BOARD [SUFFIX 15-])

Ref. No. or Q'ty	Part No.	SP	Description
RV111	1-225-789-21	s	RES, ADJ, CERMET 2K
RV112	1-225-789-21	s	RES, ADJ, CERMET 2K
RV113	1-225-793-11	s	RES, ADJ, CERMET 20K
RV301	1-225-788-21	s	RES, ADJ, CERMET 1K
RV302	1-225-788-21	s	RES, ADJ, CERMET 1K
RV303	1-225-788-21	s	RES, ADJ, CERMET 1K
RV304	1-225-788-21	s	RES, ADJ, CERMET 1K
RV309	1-225-786-11	s	RES, ADJ, CERMET 200
RV310	1-225-786-11	s	RES, ADJ, CERMET 200
RV311	1-225-789-21	s	RES, ADJ, CERMET 2K
RV312	1-225-789-21	s	RES, ADJ, CERMET 2K
RV313	1-225-793-11	s	RES, ADJ, CERMET 20K
RV503	1-241-261-41	s	RESISTOR, ADJ, CERMET 1K
RV504	1-241-261-41	s	RESISTOR, ADJ, CERMET 1K
RV506	1-241-264-11	s	RESISTOR ADJ 10K (CERMET)
RV703 *P	1-241-261-41	s	RESISTOR, ADJ, CERMET 1K
RV704	1-241-261-41	s	RESISTOR, ADJ, CERMET 1K
RV1301	1-241-262-11	s	RESISTOR ADJ 2K (CERMET)
RV1501	1-241-263-11	s	RESISTOR ADJ 5K (CERMET)
RV1801*2	1-225-793-11	s	RES, ADJ, CERMET 20K
*1	1-225-791-21	s	RES, ADJ, CERMET 5K
S1301 *2	1-692-881-41	s	SWITCH, SLIDE
S1701	1-692-271-31	s	SWITCH, SLIDE
S1801	1-692-271-31	s	SWITCH, SLIDE
TP101	1-535-877-22	s	CHIP,CHECKER (TEST POINT)
TP102	1-535-877-22	s	CHIP,CHECKER (TEST POINT)
TP105	1-535-877-22	s	CHIP,CHECKER (TEST POINT)
TP106	1-535-877-22	s	CHIP,CHECKER (TEST POINT)
TP107	1-535-877-22	s	CHIP,CHECKER (TEST POINT)
TP109	1-535-877-22	s	CHIP,CHECKER (TEST POINT)
TP110	1-535-877-22	s	CHIP,CHECKER (TEST POINT)
TP111	1-535-877-22	s	CHIP,CHECKER (TEST POINT)
TP112	1-535-877-22	s	CHIP,CHECKER (TEST POINT)
TP301	1-535-877-22	s	CHIP,CHECKER (TEST POINT)
TP302	1-535-877-22	s	CHIP,CHECKER (TEST POINT)
TP305	1-535-877-22	s	CHIP,CHECKER (TEST POINT)
TP306	1-535-877-22	s	CHIP,CHECKER (TEST POINT)
TP307	1-535-877-22	s	CHIP,CHECKER (TEST POINT)
TP309	1-535-877-22	s	CHIP,CHECKER (TEST POINT)
TP310	1-535-877-22	s	CHIP,CHECKER (TEST POINT)
TP311	1-535-877-22	s	CHIP,CHECKER (TEST POINT)
TP312	1-535-877-22	s	CHIP,CHECKER (TEST POINT)
TP501	1-535-877-22	s	CHIP,CHECKER (TEST POINT)
TP502	1-535-877-22	s	CHIP,CHECKER (TEST POINT)
TP503	1-535-877-22	s	CHIP,CHECKER (TEST POINT)
TP506	1-535-877-22	s	CHIP,CHECKER (TEST POINT)
TP508	1-535-877-22	s	CHIP,CHECKER (TEST POINT)
TP703	1-535-877-22	s	CHIP,CHECKER (TEST POINT)
TP706	1-535-877-22	s	CHIP,CHECKER (TEST POINT)
TP901	1-535-877-22	s	CHIP,CHECKER (TEST POINT)
TP1102	1-535-877-22	s	CHIP,CHECKER (TEST POINT)
TP1202	1-535-877-22	s	CHIP,CHECKER (TEST POINT)
TP1302	1-535-877-22	s	CHIP,CHECKER (TEST POINT)
TP1401	1-535-877-22	s	CHIP,CHECKER (TEST POINT)
TP1402	1-535-877-22	s	CHIP,CHECKER (TEST POINT)
TP1501	1-535-877-22	s	CHIP,CHECKER (TEST POINT)
TP1502	1-535-877-22	s	CHIP,CHECKER (TEST POINT)
TP1601	1-535-877-22	s	CHIP,CHECKER (TEST POINT)
TP1602	1-535-877-22	s	CHIP,CHECKER (TEST POINT)

(DM-123/P BOARD [SUFFIX 15-])

Ref. No. or Q'ty	Part No.	SP	Description
TP1801	1-535-877-22	s	CHIP,CHECKER (TEST POINT)
X301 *N	1-579-989-11	s	VIBRATOR, CERAMIC
*P	1-579-990-11	s	VIBRATOR, CERAMIC
X302 *N	1-579-986-11	s	VIBRATOR, CERAMIC
*P	1-579-988-11	s	VIBRATOR, CERAMIC
X901	1-579-843-11	s	OSCILLATOR, CRYSTAL

DPR-155 BOARD [SUFFIX 13] for HDW-M and MSW

[Lot No. 261 - 351] [SUFFIX 13] HDW-M2000/P, M2100/P
MSW-M2000/P, A2000/P, M2100/P

[Lot No. 261 - 424] [SUFFIX 13] MSW-2000

*H: [HDW-M2000/P, M2100/P]
*A: [MSW-A2000/P]
*C: [MSW-2000]
*M: [MSW-M2000/P, M2100/P]

Ref. No. or Q'ty	Part No.	SP	Description
1pc *H	A-8329-457-A	s	MOUNTED CIRCUIT BOARD, DPR-155HM
*A	A-8324-868-B	o	MOUNTED CIRCUIT BOARD, DPR-155
*C	A-8345-580-A	s	MOUNTED CIRCUIT BOARD, DPR-155C
*M	A-8327-045-B	s	MOUNTED CIRCUIT BOARD, DPR-155M
4pcs	3-191-747-01	o	SUPPORT (M3), HEXAGON
8pcs	7-682-545-04	s	SCREW +B3X4
1pc	3-179-084-11	s	LEVER (R), C BOARD
1pc	3-179-085-11	s	LEVER (L), C BOARD
C100	1-164-156-11	s	CAPACITOR,CERAMIC 0.1MF/25V F
C101	1-164-156-11	s	CAPACITOR,CERAMIC 0.1MF/25V F
C102	1-162-927-11	s	CAPACITOR,CERAMIC 100PF/50V CH
C103	1-126-394-11	s	CAPACITOR,ELECT 10MF/16V(CHIP)
C104	1-164-156-11	s	CAPACITOR,CERAMIC 0.1MF/25V F
C105	1-164-156-11	s	CAPACITOR,CERAMIC 0.1MF/25V F
C106	1-164-156-11	s	CAPACITOR,CERAMIC 0.1MF/25V F
C107	1-164-156-11	s	CAPACITOR,CERAMIC 0.1MF/25V F
C108	1-164-156-11	s	CAPACITOR,CERAMIC 0.1MF/25V F
C109	1-164-156-11	s	CAPACITOR,CERAMIC 0.1MF/25V F
C110	1-164-156-11	s	CAPACITOR,CERAMIC 0.1MF/25V F
C111	1-164-156-11	s	CAPACITOR,CERAMIC 0.1MF/25V F
C112	1-164-156-11	s	CAPACITOR,CERAMIC 0.1MF/25V F
C113	1-164-156-11	s	CAPACITOR,CERAMIC 0.1MF/25V F
C114	1-164-156-11	s	CAPACITOR,CERAMIC 0.1MF/25V F
C115	1-164-156-11	s	CAPACITOR,CERAMIC 0.1MF/25V F
C116	1-164-156-11	s	CAPACITOR,CERAMIC 0.1MF/25V F
C117	1-164-156-11	s	CAPACITOR,CERAMIC 0.1MF/25V F
C118	1-164-156-11	s	CAPACITOR,CERAMIC 0.1MF/25V F
C119	1-164-156-11	s	CAPACITOR,CERAMIC 0.1MF/25V F
C120	1-164-156-11	s	CAPACITOR,CERAMIC 0.1MF/25V F
C121	1-164-156-11	s	CAPACITOR,CERAMIC 0.1MF/25V F
C122	1-164-156-11	s	CAPACITOR,CERAMIC 0.1MF/25V F
C123	1-164-156-11	s	CAPACITOR,CERAMIC 0.1MF/25V F
C124	1-164-156-11	s	CAPACITOR,CERAMIC 0.1MF/25V F
C125	1-164-156-11	s	CAPACITOR,CERAMIC 0.1MF/25V F
C126	1-164-156-11	s	CAPACITOR,CERAMIC 0.1MF/25V F
C127	1-164-156-11	s	CAPACITOR,CERAMIC 0.1MF/25V F
C200	1-126-394-11	s	CAPACITOR,ELECT 10MF/16V(CHIP)
C201	1-164-156-11	s	CAPACITOR,CERAMIC 0.1MF/25V F
C202	1-164-156-11	s	CAPACITOR,CERAMIC 0.1MF/25V F
C203	1-164-156-11	s	CAPACITOR,CERAMIC 0.1MF/25V F
C204	1-164-156-11	s	CAPACITOR,CERAMIC 0.1MF/25V F
C205	1-126-394-11	s	CAPACITOR,ELECT 10MF/16V(CHIP)
C206	1-126-394-11	s	CAPACITOR,ELECT 10MF/16V(CHIP)
C207	1-164-156-11	s	CAPACITOR,CERAMIC 0.1MF/25V F
C232	1-126-394-11	s	CAPACITOR,ELECT 10MF/16V(CHIP)
C233	1-164-156-11	s	CAPACITOR,CERAMIC 0.1MF/25V F
C235	1-164-156-11	s	CAPACITOR,CERAMIC 0.1MF/25V F
C237	1-164-156-11	s	CAPACITOR,CERAMIC 0.1MF/25V F
C250	1-164-156-11	s	CAPACITOR,CERAMIC 0.1MF/25V F
C251	1-164-156-11	s	CAPACITOR,CERAMIC 0.1MF/25V F
C252	1-164-156-11	s	CAPACITOR,CERAMIC 0.1MF/25V F
C253	1-164-156-11	s	CAPACITOR,CERAMIC 0.1MF/25V F

(DPR-155 BOARD [SUFFIX 13] for HDW-M and MSW)

Ref. No. or Q'ty	Part No.	SP	Description
C300	1-164-156-11	s	CAPACITOR,CERAMIC 0.1MF/25V F
C301	1-164-156-11	s	CAPACITOR,CERAMIC 0.1MF/25V F
C302	1-164-156-11	s	CAPACITOR,CERAMIC 0.1MF/25V F
C303	1-164-156-11	s	CAPACITOR,CERAMIC 0.1MF/25V F
C304	1-126-394-11	s	CAPACITOR,ELECT 10MF/16V(CHIP)
C305	1-164-156-11	s	CAPACITOR,CERAMIC 0.1MF/25V F
C306	1-164-156-11	s	CAPACITOR,CERAMIC 0.1MF/25V F
C307	1-164-156-11	s	CAPACITOR,CERAMIC 0.1MF/25V F
C308	1-164-156-11	s	CAPACITOR,CERAMIC 0.1MF/25V F
C309	1-164-156-11	s	CAPACITOR,CERAMIC 0.1MF/25V F
C310	1-164-156-11	s	CAPACITOR,CERAMIC 0.1MF/25V F
C311	1-164-156-11	s	CAPACITOR,CERAMIC 0.1MF/25V F
C312	1-164-156-11	s	CAPACITOR,CERAMIC 0.1MF/25V F
C313	1-164-156-11	s	CAPACITOR,CERAMIC 0.1MF/25V F
C314	1-126-394-11	s	CAPACITOR,ELECT 10MF/16V(CHIP)
C315	1-164-156-11	s	CAPACITOR,CERAMIC 0.1MF/25V F
C316	1-164-156-11	s	CAPACITOR,CERAMIC 0.1MF/25V F
C320	1-164-156-11	s	CAPACITOR,CERAMIC 0.1MF/25V F
C321	1-164-156-11	s	CAPACITOR,CERAMIC 0.1MF/25V F
C322	1-164-156-11	s	CAPACITOR,CERAMIC 0.1MF/25V F
C323	1-164-156-11	s	CAPACITOR,CERAMIC 0.1MF/25V F
C324	1-164-156-11	s	CAPACITOR,CERAMIC 0.1MF/25V F
C325	1-164-156-11	s	CAPACITOR,CERAMIC 0.1MF/25V F
C326	1-164-156-11	s	CAPACITOR,CERAMIC 0.1MF/25V F
C327	1-164-156-11	s	CAPACITOR,CERAMIC 0.1MF/25V F
C328	1-164-156-11	s	CAPACITOR,CERAMIC 0.1MF/25V F
C329	1-164-156-11	s	CAPACITOR,CERAMIC 0.1MF/25V F
C330	1-164-156-11	s	CAPACITOR,CERAMIC 0.1MF/25V F
C331	1-126-394-11	s	CAPACITOR,ELECT 10MF/16V(CHIP)
C332	1-164-156-11	s	CAPACITOR,CERAMIC 0.1MF/25V F
C333	1-164-156-11	s	CAPACITOR,CERAMIC 0.1MF/25V F
C334	1-164-156-11	s	CAPACITOR,CERAMIC 0.1MF/25V F
C335	1-164-156-11	s	CAPACITOR,CERAMIC 0.1MF/25V F
C336	1-164-156-11	s	CAPACITOR,CERAMIC 0.1MF/25V F
C337	1-164-156-11	s	CAPACITOR,CERAMIC 0.1MF/25V F
C338	1-164-156-11	s	CAPACITOR,CERAMIC 0.1MF/25V F
C339	1-164-156-11	s	CAPACITOR,CERAMIC 0.1MF/25V F
C400	1-126-394-11	s	CAPACITOR,ELECT 10MF/16V(CHIP)
C401	1-164-156-11	s	CAPACITOR,CERAMIC 0.1MF/25V F
C402	1-164-156-11	s	CAPACITOR,CERAMIC 0.1MF/25V F
C403	1-164-156-11	s	CAPACITOR,CERAMIC 0.1MF/25V F
C404	1-164-156-11	s	CAPACITOR,CERAMIC 0.1MF/25V F
C405	1-164-156-11	s	CAPACITOR,CERAMIC 0.1MF/25V F
C406	1-164-156-11	s	CAPACITOR,CERAMIC 0.1MF/25V F
C407	1-164-156-11	s	CAPACITOR,CERAMIC 0.1MF/25V F
C408	1-164-156-11	s	CAPACITOR,CERAMIC 0.1MF/25V F
C409	1-164-156-11	s	CAPACITOR,CERAMIC 0.1MF/25V F
C410	1-126-394-11	s	CAPACITOR,ELECT 10MF/16V(CHIP)
C411	1-164-156-11	s	CAPACITOR,CERAMIC 0.1MF/25V F
C412	1-126-394-11	s	CAPACITOR,ELECT 10MF/16V(CHIP)
C413	1-164-156-11	s	CAPACITOR,CERAMIC 0.1MF/25V F
C415	1-164-156-11	s	CAPACITOR,CERAMIC 0.1MF/25V F
C417	1-164-156-11	s	CAPACITOR,CERAMIC 0.1MF/25V F
C418	1-126-394-11	s	CAPACITOR,ELECT 10MF/16V(CHIP)
C419	1-164-156-11	s	CAPACITOR,CERAMIC 0.1MF/25V F
C420	1-164-156-11	s	CAPACITOR,CERAMIC 0.1MF/25V F
C421	1-164-156-11	s	CAPACITOR,CERAMIC 0.1MF/25V F
C422	1-164-156-11	s	CAPACITOR,CERAMIC 0.1MF/25V F
C423	1-164-156-11	s	CAPACITOR,CERAMIC 0.1MF/25V F

(DPR-155 BOARD [SUFFIX 13] for HDW-M and MSW)

Ref. No. or Q'ty	Part No.	SP	Description
C424	1-164-156-11	s	CAPACITOR,CERAMIC 0.1MF/25V F
C425	1-164-156-11	s	CAPACITOR,CERAMIC 0.1MF/25V F
C426	1-164-156-11	s	CAPACITOR,CERAMIC 0.1MF/25V F
C427	1-164-156-11	s	CAPACITOR,CERAMIC 0.1MF/25V F
C428	1-164-156-11	s	CAPACITOR,CERAMIC 0.1MF/25V F
C429	1-164-156-11	s	CAPACITOR,CERAMIC 0.1MF/25V F
C430	1-164-156-11	s	CAPACITOR,CERAMIC 0.1MF/25V F
C431	1-164-156-11	s	CAPACITOR,CERAMIC 0.1MF/25V F
C432	1-164-156-11	s	CAPACITOR,CERAMIC 0.1MF/25V F
C433	1-126-394-11	s	CAPACITOR,ELECT 10MF/16V(CHIP)
C434	1-126-394-11	s	CAPACITOR,ELECT 10MF/16V(CHIP)
C435	1-164-156-11	s	CAPACITOR,CERAMIC 0.1MF/25V F
C437	1-164-156-11	s	CAPACITOR,CERAMIC 0.1MF/25V F
C439	1-164-156-11	s	CAPACITOR,CERAMIC 0.1MF/25V F
C440	1-164-156-11	s	CAPACITOR,CERAMIC 0.1MF/25V F
C500	1-164-156-11	s	CAPACITOR,CERAMIC 0.1MF/25V F
C501	1-164-156-11	s	CAPACITOR,CERAMIC 0.1MF/25V F
C502	1-164-156-11	s	CAPACITOR,CERAMIC 0.1MF/25V F
C503	1-164-156-11	s	CAPACITOR,CERAMIC 0.1MF/25V F
C504	1-164-156-11	s	CAPACITOR,CERAMIC 0.1MF/25V F
C505	1-164-156-11	s	CAPACITOR,CERAMIC 0.1MF/25V F
C506	1-164-156-11	s	CAPACITOR,CERAMIC 0.1MF/25V F
C507	1-164-156-11	s	CAPACITOR,CERAMIC 0.1MF/25V F
C508	1-164-156-11	s	CAPACITOR,CERAMIC 0.1MF/25V F
C509	1-164-156-11	s	CAPACITOR,CERAMIC 0.1MF/25V F
C510	1-164-156-11	s	CAPACITOR,CERAMIC 0.1MF/25V F
C511	1-164-156-11	s	CAPACITOR,CERAMIC 0.1MF/25V F
C512	1-164-156-11	s	CAPACITOR,CERAMIC 0.1MF/25V F
C513	1-164-156-11	s	CAPACITOR,CERAMIC 0.1MF/25V F
C514	1-164-156-11	s	CAPACITOR,CERAMIC 0.1MF/25V F
C515	1-164-156-11	s	CAPACITOR,CERAMIC 0.1MF/25V F
C516	1-164-156-11	s	CAPACITOR,CERAMIC 0.1MF/25V F
C517	1-164-156-11	s	CAPACITOR,CERAMIC 0.1MF/25V F
C518	1-164-156-11	s	CAPACITOR,CERAMIC 0.1MF/25V F
C519	1-164-156-11	s	CAPACITOR,CERAMIC 0.1MF/25V F
C520	1-164-156-11	s	CAPACITOR,CERAMIC 0.1MF/25V F
C521	1-164-156-11	s	CAPACITOR,CERAMIC 0.1MF/25V F
C522	1-164-156-11	s	CAPACITOR,CERAMIC 0.1MF/25V F
C523	1-126-394-11	s	CAPACITOR,ELECT 10MF/16V(CHIP)
C524	1-164-156-11	s	CAPACITOR,CERAMIC 0.1MF/25V F
C525	1-164-156-11	s	CAPACITOR,CERAMIC 0.1MF/25V F
C526	1-162-922-11	s	CAPACITOR,CERAMIC 39PF/50V CH
C527	1-164-156-11	s	CAPACITOR,CERAMIC 0.1MF/25V F
C528	1-164-156-11	s	CAPACITOR,CERAMIC 0.1MF/25V F
C529	1-164-156-11	s	CAPACITOR,CERAMIC 0.1MF/25V F
C530	1-164-156-11	s	CAPACITOR,CERAMIC 0.1MF/25V F
C531	1-164-156-11	s	CAPACITOR,CERAMIC 0.1MF/25V F
C532	1-164-156-11	s	CAPACITOR,CERAMIC 0.1MF/25V F
C533	1-164-156-11	s	CAPACITOR,CERAMIC 0.1MF/25V F
C534	1-164-156-11	s	CAPACITOR,CERAMIC 0.1MF/25V F
C535	1-164-156-11	s	CAPACITOR,CERAMIC 0.1MF/25V F
C536	1-164-156-11	s	CAPACITOR,CERAMIC 0.1MF/25V F
C537	1-164-156-11	s	CAPACITOR,CERAMIC 0.1MF/25V F
C538	1-164-156-11	s	CAPACITOR,CERAMIC 0.1MF/25V F
C539	1-164-156-11	s	CAPACITOR,CERAMIC 0.1MF/25V F
C540	1-164-156-11	s	CAPACITOR,CERAMIC 0.1MF/25V F
C541	1-164-156-11	s	CAPACITOR,CERAMIC 0.1MF/25V F
C542	1-164-156-11	s	CAPACITOR,CERAMIC 0.1MF/25V F
C543	1-164-156-11	s	CAPACITOR,CERAMIC 0.1MF/25V F

(DPR-155 BOARD [SUFFIX 13] for HDW-M and MSW)

Ref. No. or Q'ty	Part No.	SP	Description
C544	1-164-156-11	s	CAPACITOR,CERAMIC 0.1MF/25V F
C545	1-164-156-11	s	CAPACITOR,CERAMIC 0.1MF/25V F
C546	1-164-156-11	s	CAPACITOR,CERAMIC 0.1MF/25V F
C547	1-164-156-11	s	CAPACITOR,CERAMIC 0.1MF/25V F
C548	1-164-156-11	s	CAPACITOR,CERAMIC 0.1MF/25V F
C549	1-164-156-11	s	CAPACITOR,CERAMIC 0.1MF/25V F
C550	1-164-156-11	s	CAPACITOR,CERAMIC 0.1MF/25V F
C551	1-164-156-11	s	CAPACITOR,CERAMIC 0.1MF/25V F
C552	1-164-156-11	s	CAPACITOR,CERAMIC 0.1MF/25V F
C600	1-104-851-11	s	CAPACITOR,TANTALUM 10MF/10V
C601	1-164-156-11	s	CAPACITOR,CERAMIC 0.1MF/25V F
C602	1-164-156-11	s	CAPACITOR,CERAMIC 0.1MF/25V F
C603	1-164-156-11	s	CAPACITOR,CERAMIC 0.1MF/25V F
C604	1-164-156-11	s	CAPACITOR,CERAMIC 0.1MF/25V F
C605	1-164-156-11	s	CAPACITOR,CERAMIC 0.1MF/25V F
C606	1-164-156-11	s	CAPACITOR,CERAMIC 0.1MF/25V F
C607	1-126-394-11	s	CAPACITOR,ELECT 10MF/16V(CHIP)
C608	1-164-156-11	s	CAPACITOR,CERAMIC 0.1MF/25V F
C609	1-164-156-11	s	CAPACITOR,CERAMIC 0.1MF/25V F
C610	1-164-156-11	s	CAPACITOR,CERAMIC 0.1MF/25V F
C611	1-164-156-11	s	CAPACITOR,CERAMIC 0.1MF/25V F
C612	1-164-156-11	s	CAPACITOR,CERAMIC 0.1MF/25V F
C613	1-164-156-11	s	CAPACITOR,CERAMIC 0.1MF/25V F
C614	1-164-156-11	s	CAPACITOR,CERAMIC 0.1MF/25V F
C615	1-164-156-11	s	CAPACITOR,CERAMIC 0.1MF/25V F
C616	1-164-156-11	s	CAPACITOR,CERAMIC 0.1MF/25V F
C617	1-164-156-11	s	CAPACITOR,CERAMIC 0.1MF/25V F
C618	1-164-156-11	s	CAPACITOR,CERAMIC 0.1MF/25V F
C619	1-164-156-11	s	CAPACITOR,CERAMIC 0.1MF/25V F
C620	1-164-156-11	s	CAPACITOR,CERAMIC 0.1MF/25V F
C621	1-164-156-11	s	CAPACITOR,CERAMIC 0.1MF/25V F
C622	1-164-156-11	s	CAPACITOR,CERAMIC 0.1MF/25V F
C623	1-164-156-11	s	CAPACITOR,CERAMIC 0.1MF/25V F
C624	1-164-156-11	s	CAPACITOR,CERAMIC 0.1MF/25V F
C625	1-164-156-11	s	CAPACITOR,CERAMIC 0.1MF/25V F
C626	1-164-156-11	s	CAPACITOR,CERAMIC 0.1MF/25V F
C627	1-164-156-11	s	CAPACITOR,CERAMIC 0.1MF/25V F
C628	1-164-156-11	s	CAPACITOR,CERAMIC 0.1MF/25V F
C629	1-164-156-11	s	CAPACITOR,CERAMIC 0.1MF/25V F
C630	1-104-851-11	s	CAPACITOR,TANTALUM 10MF/10V
C631	1-104-851-11	s	CAPACITOR,TANTALUM 10MF/10V
C632	1-164-156-11	s	CAPACITOR,CERAMIC 0.1MF/25V F
C633	1-164-156-11	s	CAPACITOR,CERAMIC 0.1MF/25V F
C634	1-164-156-11	s	CAPACITOR,CERAMIC 0.1MF/25V F
C635	1-164-156-11	s	CAPACITOR,CERAMIC 0.1MF/25V F
C636	1-164-156-11	s	CAPACITOR,CERAMIC 0.1MF/25V F
C637	1-164-156-11	s	CAPACITOR,CERAMIC 0.1MF/25V F
C638	1-164-156-11	s	CAPACITOR,CERAMIC 0.1MF/25V F
C639	1-164-156-11	s	CAPACITOR,CERAMIC 0.1MF/25V F
C640	1-164-156-11	s	CAPACITOR,CERAMIC 0.1MF/25V F
C641	1-104-851-11	s	CAPACITOR,TANTALUM 10MF/10V
C700	1-164-156-11	s	CAPACITOR,CERAMIC 0.1MF/25V F
C701	1-113-503-11	s	CAPACITOR,CERAMIC 3900PF CH
C702	1-162-968-11	s	CAPACITOR,CERAMIC 4700PF/50V B
C703	1-164-156-11	s	CAPACITOR,CERAMIC 0.1MF/25V F
C704	1-164-156-11	s	CAPACITOR,CERAMIC 0.1MF/25V F
C705	1-164-156-11	s	CAPACITOR,CERAMIC 0.1MF/25V F
C706	1-164-156-11	s	CAPACITOR,CERAMIC 0.1MF/25V F
C707	1-164-156-11	s	CAPACITOR,CERAMIC 0.1MF/25V F

(DPR-155 BOARD [SUFFIX 13] for HDW-M and MSW)

Ref. No. or Q'ty	Part No.	SP	Description
C708	1-164-156-11	s	CAPACITOR,CERAMIC 0.1MF/25V F
C709	1-164-156-11	s	CAPACITOR,CERAMIC 0.1MF/25V F
C710	1-164-156-11	s	CAPACITOR,CERAMIC 0.1MF/25V F
C711	1-164-156-11	s	CAPACITOR,CERAMIC 0.1MF/25V F
C712	1-164-156-11	s	CAPACITOR,CERAMIC 0.1MF/25V F
C713	1-113-503-11	s	CAPACITOR,CERAMIC 3900PF CH
C714	1-162-968-11	s	CAPACITOR,CERAMIC 4700PF/50V B
C715	1-164-156-11	s	CAPACITOR,CERAMIC 0.1MF/25V F
C716	1-164-156-11	s	CAPACITOR,CERAMIC 0.1MF/25V F
C717	1-164-156-11	s	CAPACITOR,CERAMIC 0.1MF/25V F
C718	1-164-156-11	s	CAPACITOR,CERAMIC 0.1MF/25V F
C719	1-164-156-11	s	CAPACITOR,CERAMIC 0.1MF/25V F
C720	1-164-156-11	s	CAPACITOR,CERAMIC 0.1MF/25V F
C721	1-164-156-11	s	CAPACITOR,CERAMIC 0.1MF/25V F
C722	1-164-156-11	s	CAPACITOR,CERAMIC 0.1MF/25V F
C723	1-164-156-11	s	CAPACITOR,CERAMIC 0.1MF/25V F
C724	1-164-156-11	s	CAPACITOR,CERAMIC 0.1MF/25V F
C725	1-113-503-11	s	CAPACITOR,CERAMIC 3900PF CH
C726	1-162-968-11	s	CAPACITOR,CERAMIC 4700PF/50V B
C727	1-164-156-11	s	CAPACITOR,CERAMIC 0.1MF/25V F
C728	1-164-156-11	s	CAPACITOR,CERAMIC 0.1MF/25V F
C729	1-164-156-11	s	CAPACITOR,CERAMIC 0.1MF/25V F
C730	1-164-156-11	s	CAPACITOR,CERAMIC 0.1MF/25V F
C731	1-164-156-11	s	CAPACITOR,CERAMIC 0.1MF/25V F
C732	1-164-156-11	s	CAPACITOR,CERAMIC 0.1MF/25V F
C733	1-164-156-11	s	CAPACITOR,CERAMIC 0.1MF/25V F
C734	1-164-156-11	s	CAPACITOR,CERAMIC 0.1MF/25V F
C735	1-164-156-11	s	CAPACITOR,CERAMIC 0.1MF/25V F
C736	1-164-156-11	s	CAPACITOR,CERAMIC 0.1MF/25V F
C737	1-113-503-11	s	CAPACITOR,CERAMIC 3900PF CH
C738	1-162-968-11	s	CAPACITOR,CERAMIC 4700PF/50V B
C739	1-164-156-11	s	CAPACITOR,CERAMIC 0.1MF/25V F
C740	1-164-156-11	s	CAPACITOR,CERAMIC 0.1MF/25V F
C741	1-164-156-11	s	CAPACITOR,CERAMIC 0.1MF/25V F
C742	1-164-156-11	s	CAPACITOR,CERAMIC 0.1MF/25V F
C743	1-164-156-11	s	CAPACITOR,CERAMIC 0.1MF/25V F
C744	1-164-156-11	s	CAPACITOR,CERAMIC 0.1MF/25V F
C745	1-164-156-11	s	CAPACITOR,CERAMIC 0.1MF/25V F
C746	1-164-156-11	s	CAPACITOR,CERAMIC 0.1MF/25V F
C747	1-164-156-11	s	CAPACITOR,CERAMIC 0.1MF/25V F
C748	1-164-156-11	s	CAPACITOR,CERAMIC 0.1MF/25V F
C800	1-126-394-11	s	CAPACITOR,ELECT 10MF/16V(CHIP)
C801	1-164-156-11	s	CAPACITOR,CERAMIC 0.1MF/25V F
C802	1-164-156-11	s	CAPACITOR,CERAMIC 0.1MF/25V F
C803	1-164-156-11	s	CAPACITOR,CERAMIC 0.1MF/25V F
C804	1-164-156-11	s	CAPACITOR,CERAMIC 0.1MF/25V F
C805	1-164-156-11	s	CAPACITOR,CERAMIC 0.1MF/25V F
C806	1-164-156-11	s	CAPACITOR,CERAMIC 0.1MF/25V F
C807	1-164-156-11	s	CAPACITOR,CERAMIC 0.1MF/25V F
C808	1-164-156-11	s	CAPACITOR,CERAMIC 0.1MF/25V F
C810	1-164-156-11	s	CAPACITOR,CERAMIC 0.1MF/25V F
C811	1-164-156-11	s	CAPACITOR,CERAMIC 0.1MF/25V F
C812	1-126-392-11	s	CAPACITOR,CHIP ELECT100MF/6.3V
C813	1-126-392-11	s	CAPACITOR,CHIP ELECT100MF/6.3V
C814	1-164-156-11	s	CAPACITOR,CERAMIC 0.1MF/25V F
C815	1-164-156-11	s	CAPACITOR,CERAMIC 0.1MF/25V F
C816	1-164-156-11	s	CAPACITOR,CERAMIC 0.1MF/25V F
C817	1-164-156-11	s	CAPACITOR,CERAMIC 0.1MF/25V F
C818	1-164-156-11	s	CAPACITOR,CERAMIC 0.1MF/25V F

(DPR-155 BOARD [SUFFIX 13] for HDW-M and MSW)

Ref. No. or Q'ty	Part No.	SP	Description
C819	1-126-392-11	s	CAPACITOR,CHIP ELECT100MF/6.3V
C820	1-126-392-11	s	CAPACITOR,CHIP ELECT100MF/6.3V
C821	1-126-392-11	s	CAPACITOR,CHIP ELECT100MF/6.3V
C822	1-126-392-11	s	CAPACITOR,CHIP ELECT100MF/6.3V
C823	1-164-156-11	s	CAPACITOR,CERAMIC 0.1MF/25V F
C827	1-164-156-11	s	CAPACITOR,CERAMIC 0.1MF/25V F
C829	1-164-156-11	s	CAPACITOR,CERAMIC 0.1MF/25V F
C831	1-164-156-11	s	CAPACITOR,CERAMIC 0.1MF/25V F
C832	1-164-156-11	s	CAPACITOR,CERAMIC 0.1MF/25V F
C833	1-164-156-11	s	CAPACITOR,CERAMIC 0.1MF/25V F
C834	1-164-156-11	s	CAPACITOR,CERAMIC 0.1MF/25V F
C835	1-164-156-11	s	CAPACITOR,CERAMIC 0.1MF/25V F
C837	1-164-156-11	s	CAPACITOR,CERAMIC 0.1MF/25V F
C838	1-164-156-11	s	CAPACITOR,CERAMIC 0.1MF/25V F
C839	1-126-394-11	s	CAPACITOR,ELECT 10MF/16V(CHIP)
C842	1-164-156-11	s	CAPACITOR,CERAMIC 0.1MF/25V F
C843	1-164-156-11	s	CAPACITOR,CERAMIC 0.1MF/25V F
C844	1-164-156-11	s	CAPACITOR,CERAMIC 0.1MF/25V F
C845	1-164-156-11	s	CAPACITOR,CERAMIC 0.1MF/25V F
C846	1-164-156-11	s	CAPACITOR,CERAMIC 0.1MF/25V F
C847	1-164-156-11	s	CAPACITOR,CERAMIC 0.1MF/25V F
C848	1-126-394-11	s	CAPACITOR,ELECT 10MF/16V(CHIP)
C849	1-126-394-11	s	CAPACITOR,ELECT 10MF/16V(CHIP)
C850	1-164-156-11	s	CAPACITOR,CERAMIC 0.1MF/25V F
C851	1-164-156-11	s	CAPACITOR,CERAMIC 0.1MF/25V F
C852	1-164-156-11	s	CAPACITOR,CERAMIC 0.1MF/25V F
C853	1-126-394-11	s	CAPACITOR,ELECT 10MF/16V(CHIP)
C863	1-164-156-11	s	CAPACITOR,CERAMIC 0.1MF/25V F
C864	1-164-156-11	s	CAPACITOR,CERAMIC 0.1MF/25V F
C866	1-126-394-11	s	CAPACITOR,ELECT 10MF/16V(CHIP)
C912	1-164-156-11	s	CAPACITOR,CERAMIC 0.1MF/25V F
C913	1-126-394-11	s	CAPACITOR,ELECT 10MF/16V(CHIP)
C914	1-126-394-11	s	CAPACITOR,ELECT 10MF/16V(CHIP)
C915	1-164-156-11	s	CAPACITOR,CERAMIC 0.1MF/25V F
C916	1-164-156-11	s	CAPACITOR,CERAMIC 0.1MF/25V F
C917	1-164-156-11	s	CAPACITOR,CERAMIC 0.1MF/25V F
C918	1-164-156-11	s	CAPACITOR,CERAMIC 0.1MF/25V F
C919	1-164-156-11	s	CAPACITOR,CERAMIC 0.1MF/25V F
C920	1-164-156-11	s	CAPACITOR,CERAMIC 0.1MF/25V F
C921	1-164-156-11	s	CAPACITOR,CERAMIC 0.1MF/25V F
C922	1-164-156-11	s	CAPACITOR,CERAMIC 0.1MF/25V F
C923	1-164-156-11	s	CAPACITOR,CERAMIC 0.1MF/25V F
C924	1-164-156-11	s	CAPACITOR,CERAMIC 0.1MF/25V F
C925	1-164-156-11	s	CAPACITOR,CERAMIC 0.1MF/25V F
C926	1-164-156-11	s	CAPACITOR,CERAMIC 0.1MF/25V F
C927	1-164-156-11	s	CAPACITOR,CERAMIC 0.1MF/25V F
C928	1-164-156-11	s	CAPACITOR,CERAMIC 0.1MF/25V F
C929	1-164-156-11	s	CAPACITOR,CERAMIC 0.1MF/25V F
C930	1-164-156-11	s	CAPACITOR,CERAMIC 0.1MF/25V F
C931	1-164-156-11	s	CAPACITOR,CERAMIC 0.1MF/25V F
C932	1-164-156-11	s	CAPACITOR,CERAMIC 0.1MF/25V F
C933	1-164-156-11	s	CAPACITOR,CERAMIC 0.1MF/25V F
C934	1-164-156-11	s	CAPACITOR,CERAMIC 0.1MF/25V F
C935	1-164-156-11	s	CAPACITOR,CERAMIC 0.1MF/25V F
C936	1-164-156-11	s	CAPACITOR,CERAMIC 0.1MF/25V F
C937	1-164-156-11	s	CAPACITOR,CERAMIC 0.1MF/25V F
C938	1-164-156-11	s	CAPACITOR,CERAMIC 0.1MF/25V F
C939	1-164-156-11	s	CAPACITOR,CERAMIC 0.1MF/25V F

(DPR-155 BOARD [SUFFIX 13] for HDW-M and MSW)

Ref. No. or Q'ty	Part No.	SP	Description
CN16	1-580-789-21	o	PIN,CONNECTOR (SMD) 6P
F802	⚠ 1-576-270-11	s	FUSE CHIP 4A/125V (6125)
F803	⚠ 1-576-270-11	s	FUSE CHIP 4A/125V (6125)
FB200	1-469-094-11	s	FERRITE, EMI (SMD)
FB600	1-469-094-11	s	FERRITE, EMI (SMD)
FB601	1-469-094-11	s	FERRITE, EMI (SMD)
FL200	1-239-898-22	s	FILTER, EMI (SMD)
FL600	1-233-674-21	s	FILTER, EMI
FL601	1-233-674-21	s	FILTER, EMI
FL602	1-233-674-21	s	FILTER, EMI
IC100	8-759-549-15	s	IC SN74LV245APWR
IC101	8-759-549-15	s	IC SN74LV245APWR
IC102	8-759-523-84	s	IC TC74VHC14FT (EL)
IC103	8-759-491-46	s	IC TC74VHCT04AFT (EL)
IC104	8-759-491-46	s	IC TC74VHCT04AFT (EL)
IC105	8-759-523-94	s	IC TC74VHC32FT(EL)
IC106	8-759-549-01	s	IC SN74LV125APWR
IC107	8-759-392-77	s	IC SN74LVC245APW (E20)
IC108	8-759-549-15	s	IC SN74LV245APWR
IC109	8-759-524-07	s	IC TC74VHC138FT(EL)
IC110	8-759-549-15	s	IC SN74LV245APWR
IC111	8-759-491-46	s	IC TC74VHCT04AFT (EL)
IC112	8-759-549-15	s	IC SN74LV245APWR
IC113	8-759-549-15	s	IC SN74LV245APWR
IC114	8-759-549-15	s	IC SN74LV245APWR
IC115	8-759-549-15	s	IC SN74LV245APWR
IC116	8-759-549-15	s	IC SN74LV245APWR
IC117	8-759-549-15	s	IC SN74LV245APWR
IC118	8-759-524-07	s	IC TC74VHC138FT(EL)
IC119	8-759-524-07	s	IC TC74VHC138FT(EL)
IC120	8-759-523-81	s	IC TC74VHC08FT(EL)
IC121	8-759-196-96	s	IC TC7SH08FU (TE85R)
IC122	8-759-523-92	s	IC TC74VHC21FT(EL)
IC123	8-759-549-15	s	IC SN74LV245APWR
IC124	8-752-392-03	s	IC CXD1095BR
IC125	8-759-196-96	s	IC TC7SH08FU (TE85R)
IC200	8-759-475-55	s	IC TC74LCX574FT(EL)
IC201	8-759-475-55	s	IC TC74LCX574FT(EL)
IC202	8-759-475-55	s	IC TC74LCX574FT(EL)
IC203	8-759-475-43	s	IC TC74LCX125FT(EL)
IC204	8-759-475-43	s	IC TC74LCX125FT(EL)
IC210	8-759-712-32	s	IC SN65LVDS389DBTR
IC212	8-759-712-32	s	IC SN65LVDS389DBTR
IC214	8-759-712-32	s	IC SN65LVDS389DBTR
IC216	8-759-271-86	s	IC TC7SH04FU
IC217	8-759-271-86	s	IC TC7SH04FU
IC250	8-759-392-77	s	IC SN74LVC245APW (E20)
IC251	8-759-392-77	s	IC SN74LVC245APW (E20)
IC252	8-759-392-77	s	IC SN74LVC245APW (E20)
IC253	8-759-475-43	s	IC TC74LCX125FT(EL)
IC301	8-759-449-09	s	IC CXD8945BR
IC302	8-759-524-10	s	IC TC74VHC157FT (EL)
IC303	8-759-524-10	s	IC TC74VHC157FT (EL)
IC307	6-700-497-01	s	IC MSM56V16800F-10TS-K
IC308	6-700-497-01	s	IC MSM56V16800F-10TS-K
IC309	6-700-497-01	s	IC MSM56V16800F-10TS-K
IC310	8-759-392-77	s	IC SN74LVC245APW (E20)

(DPR-155 BOARD [SUFFIX 13] for HDW-M and MSW)

Ref. No. or Q'ty	Part No.	SP	Description
IC311	8-759-392-77	s	IC SN74LVC245APW (E20)
IC312	6-702-238-11	s	IC HY57V643220CT-7TR
IC400	8-759-574-66	s	IC CXD9077AR
IC401	8-759-475-43	s	IC TC74LCX125FT(EL)
IC402	8-759-712-31	s	IC SN65LVDT388DBTR
IC404	8-759-712-31	s	IC SN65LVDT388DBTR
IC406	8-759-639-86	s	IC SN65LVDS32DR
IC407	8-759-656-31	o	IC CXD9094AR
IC408	8-759-712-32	s	IC SN65LVDS389DBTR
IC410	8-759-712-32	s	IC SN65LVDS389DBTR
IC412	8-759-712-32	s	IC SN65LVDS389DBTR
IC413	8-759-639-86	s	IC SN65LVDS32DR
IC500	8-759-199-86	s	IC CXD8807BR
IC501	8-759-549-15	s	IC SN74LV245APWR
IC502	8-759-549-15	s	IC SN74LV245APWR
IC503	6-700-803-01	s	IC CY7C1049BV33-15VC-T2
IC504	6-700-803-01	s	IC CY7C1049BV33-15VC-T2
IC505	6-700-803-01	s	IC CY7C1049BV33-15VC-T2
IC506	8-752-359-55	s	IC CXK48324R
IC507	8-752-359-55	s	IC CXK48324R
IC508	8-752-359-55	s	IC CXK48324R
IC509	8-752-359-55	s	IC CXK48324R
IC510	8-752-359-55	s	IC CXK48324R
IC601	8-759-524-09	s	IC TC74VHC153FT (EL)
IC602	8-759-475-55	s	IC TC74LCX574FT(EL)
IC603	8-759-475-55	s	IC TC74LCX574FT(EL)
IC604	8-759-475-55	s	IC TC74LCX574FT(EL)
IC605	6-702-238-11	s	IC HY57V643220CT-7TR
IC606	6-702-238-11	s	IC HY57V643220CT-7TR
IC607	6-702-238-11	s	IC HY57V643220CT-7TR
IC700	8-752-392-03	s	IC CXD1095BR
IC701	6-702-254-01	s	IC DSPB56362PV100-1J21D
IC702	8-759-543-83	s	IC KM416V1204CT-L6
IC703	8-759-543-83	s	IC KM416V1204CT-L6
IC704	6-702-254-01	s	IC DSPB56362PV100-1J21D
IC705	8-759-543-83	s	IC KM416V1204CT-L6
IC706	8-759-543-83	s	IC KM416V1204CT-L6
IC707	6-702-254-01	s	IC DSPB56362PV100-1J21D
IC708	8-759-543-83	s	IC KM416V1204CT-L6
IC709	8-759-543-83	s	IC KM416V1204CT-L6
IC710	6-702-254-01	s	IC DSPB56362PV100-1J21D
IC711	8-759-543-83	s	IC KM416V1204CT-L6
IC712	8-759-543-83	s	IC KM416V1204CT-L6
IC801	8-759-549-15	s	IC SN74LV245APWR
IC802	8-759-196-96	s	IC TC7SH08FU (TE85R)
IC803	8-759-491-46	s	IC TC74VHCT04AFT (EL)
IC804	8-759-475-43	s	IC TC74LCX125FT(EL)
IC805	8-759-475-43	s	IC TC74LCX125FT(EL)
IC808	8-759-549-15	s	IC SN74LV245APWR
IC809	8-759-523-78	s	IC TC74VHC00FT(EL)
IC810	8-759-392-77	s	IC SN74LVC245APW (E20)
IC812	8-759-475-43	s	IC TC74LCX125FT(EL)
IC813	8-759-475-43	s	IC TC74LCX125FT(EL)
IC814	8-759-475-43	s	IC TC74LCX125FT(EL)
IC815	8-759-475-43	s	IC TC74LCX125FT(EL)
IC817	8-759-549-01	s	IC SN74LV125APWR
IC818	8-759-549-15	s	IC SN74LV245APWR
IC819	8-759-524-10	s	IC TC74VHC157FT (EL)
IC822	8-759-549-01	s	IC SN74LV125APWR

(DPR-155 BOARD [SUFFIX 13] for HDW-M and MSW)

Ref. No. or Q'ty	Part No.	SP	Description
IC823	8-759-549-15	s	IC SN74LV245APWR
IC824	8-759-549-15	s	IC SN74LV245APWR
IC825	8-759-549-15	s	IC SN74LV245APWR
IC826	8-759-549-01	s	IC SN74LV125APWR
IC827	6-702-658-01	s	IC XC2S150-5PQ208C1
IC829	8-759-524-10	s	IC TC74VHC157FT (EL)
IC831	8-759-524-27	s	IC TC74VHC244FT(EL)
IC834	6-802-191-01	s	IC XC18V02-DPR155-V2.00
IC902	8-759-525-59	s	IC CXD9012AR
IC903	8-759-549-15	s	IC SN74LV245APWR
IC904	8-759-549-15	s	IC SN74LV245APWR
IC905	6-702-238-11	s	IC HY57V643220CT-7TR
L100	1-412-056-11	s	INDUCTOR 4.7UH (3225)
L101	1-412-056-11	s	INDUCTOR 4.7UH (3225)
L102	1-412-056-11	s	INDUCTOR 4.7UH (3225)
L103	1-412-056-11	s	INDUCTOR 4.7UH (3225)
L200	1-412-056-11	s	INDUCTOR 4.7UH (3225)
L201	1-412-056-11	s	INDUCTOR 4.7UH (3225)
L204	1-412-056-11	s	INDUCTOR 4.7UH (3225)
L402	1-412-056-11	s	INDUCTOR 4.7UH (3225)
L405	1-412-056-11	s	INDUCTOR 4.7UH (3225)
L600	1-412-056-11	s	INDUCTOR 4.7UH (3225)
L800	1-406-864-21	s	COIL,CHOKE 4.7UH
L801	1-406-864-21	s	COIL,CHOKE 4.7UH
L802	1-406-864-21	s	COIL,CHOKE 4.7UH
L803	1-406-864-21	s	COIL,CHOKE 4.7UH
L804	1-412-056-11	s	INDUCTOR 4.7UH (3225)
L806	1-412-056-11	s	INDUCTOR 4.7UH (3225)
L807	1-412-056-11	s	INDUCTOR 4.7UH (3225)
L808	1-412-056-11	s	INDUCTOR 4.7UH (3225)
Q200	8-729-029-14	s	TRANSISTOR DTC144EUA-T106
Q400	8-729-029-14	s	TRANSISTOR DTC144EUA-T106
Q800	8-729-029-14	s	TRANSISTOR DTC144EUA-T106
R100	1-218-740-11	s	RESISTOR,CHIP 100K 1/16W(1608)
R101	1-218-740-11	s	RESISTOR,CHIP 100K 1/16W(1608)
R102	1-218-740-11	s	RESISTOR,CHIP 100K 1/16W(1608)
R103	1-218-740-11	s	RESISTOR,CHIP 100K 1/16W(1608)
R105	1-218-740-11	s	RESISTOR,CHIP 100K 1/16W(1608)
R106	1-218-660-91	s	RESISTOR,CHIP 47 1/16W (1608)
R107	1-218-660-91	s	RESISTOR,CHIP 47 1/16W (1608)
R108	1-218-660-91	s	RESISTOR,CHIP 47 1/16W (1608)
R109	1-218-660-91	s	RESISTOR,CHIP 47 1/16W (1608)
R110	1-218-740-11	s	RESISTOR,CHIP 100K 1/16W(1608)
R111	1-218-668-11	s	RESISTOR,CHIP 100 1/16W (1608)
R115	1-218-740-11	s	RESISTOR,CHIP 100K 1/16W(1608)
R117	1-218-708-11	s	RESISTOR,CHIP 4.7K 1/16W(1608)
R118	1-218-708-11	s	RESISTOR,CHIP 4.7K 1/16W(1608)
R122	1-218-708-11	s	RESISTOR,CHIP 4.7K 1/16W(1608)
R124	1-218-708-11	s	RESISTOR,CHIP 4.7K 1/16W(1608)
R125	1-218-708-11	s	RESISTOR,CHIP 4.7K 1/16W(1608)
R126	1-218-708-11	s	RESISTOR,CHIP 4.7K 1/16W(1608)
R130	1-216-864-11	s	CONDUCTOR, CHIP (1608)
R131	1-216-864-11	s	CONDUCTOR, CHIP (1608)
R132	1-216-864-11	s	CONDUCTOR, CHIP (1608)
R133	1-216-864-11	s	CONDUCTOR, CHIP (1608)
R135	1-218-708-11	s	RESISTOR,CHIP 4.7K 1/16W(1608)
R136	1-218-652-11	s	RESISTOR,CHIP 22 1/16W (1608)
R141	1-216-864-11	s	CONDUCTOR, CHIP (1608)

(DPR-155 BOARD [SUFFIX 13] for HDW-M and MSW)

Ref. No. or Q'ty	Part No.	SP	Description
R200	1-218-676-11	s	RESISTOR,CHIP 220 1/16W(1608)
R205	1-218-652-11	s	RESISTOR,CHIP 22 1/16W (1608)
R220	1-218-660-91	s	RESISTOR,CHIP 47 1/16W (1608)
R222	1-216-864-11	s	CONDUCTOR, CHIP (1608)
R223	1-216-864-11	s	CONDUCTOR, CHIP (1608)
R232	1-218-716-11	s	RESISTOR,CHIP 10K 1/16W(1608)
R250	1-218-652-11	s	RESISTOR,CHIP 22 1/16W (1608)
R251	1-218-652-11	s	RESISTOR,CHIP 22 1/16W (1608)
R252	1-218-652-11	s	RESISTOR,CHIP 22 1/16W (1608)
R253	1-218-652-11	s	RESISTOR,CHIP 22 1/16W (1608)
R254	1-218-652-11	s	RESISTOR,CHIP 22 1/16W (1608)
R255	1-218-652-11	s	RESISTOR,CHIP 22 1/16W (1608)
R256	1-218-652-11	s	RESISTOR,CHIP 22 1/16W (1608)
R257	1-218-740-11	s	RESISTOR,CHIP 100K 1/16W(1608)
R300	1-216-864-11	s	CONDUCTOR, CHIP (1608)
R301	1-216-864-11	s	CONDUCTOR, CHIP (1608)
R302	1-216-864-11	s	CONDUCTOR, CHIP (1608)
R303	1-218-708-11	s	RESISTOR,CHIP 4.7K 1/16W(1608)
R304	1-218-708-11	s	RESISTOR,CHIP 4.7K 1/16W(1608)
R305	1-218-708-11	s	RESISTOR,CHIP 4.7K 1/16W(1608)
R306	1-218-740-11	s	RESISTOR,CHIP 100K 1/16W(1608)
R307	1-218-708-11	s	RESISTOR,CHIP 4.7K 1/16W(1608)
R312	1-216-864-11	s	CONDUCTOR, CHIP (1608)
R313	1-216-864-11	s	CONDUCTOR, CHIP (1608)
R314	1-216-864-11	s	CONDUCTOR, CHIP (1608)
R315	1-216-864-11	s	CONDUCTOR, CHIP (1608)
R316	1-216-864-11	s	CONDUCTOR, CHIP (1608)
R317	1-218-740-11	s	RESISTOR,CHIP 100K 1/16W(1608)
R318	1-218-740-11	s	RESISTOR,CHIP 100K 1/16W(1608)
R319	1-218-740-11	s	RESISTOR,CHIP 100K 1/16W(1608)
R320	1-218-740-11	s	RESISTOR,CHIP 100K 1/16W(1608)
R321	1-218-740-11	s	RESISTOR,CHIP 100K 1/16W(1608)
R322	1-216-864-11	s	CONDUCTOR, CHIP (1608)
R323	1-216-864-11	s	CONDUCTOR, CHIP (1608)
R324	1-216-864-11	s	CONDUCTOR, CHIP (1608)
R325	1-216-864-11	s	CONDUCTOR, CHIP (1608)
R326	1-216-864-11	s	CONDUCTOR, CHIP (1608)
R327	1-216-864-11	s	CONDUCTOR, CHIP (1608)
R328	1-216-864-11	s	CONDUCTOR, CHIP (1608)
R329	1-216-864-11	s	CONDUCTOR, CHIP (1608)
R330	1-218-740-11	s	RESISTOR,CHIP 100K 1/16W(1608)
R331	1-216-864-11	s	CONDUCTOR, CHIP (1608)
R335	1-216-864-11	s	CONDUCTOR, CHIP (1608)
R338	1-218-708-11	s	RESISTOR,CHIP 4.7K 1/16W(1608)
R349	1-216-864-11	s	CONDUCTOR, CHIP (1608)
R351	1-218-652-11	s	RESISTOR,CHIP 22 1/16W (1608)
R352	1-218-652-11	s	RESISTOR,CHIP 22 1/16W (1608)
R353	1-218-708-11	s	RESISTOR,CHIP 4.7K 1/16W(1608)
R354	1-218-708-11	s	RESISTOR,CHIP 4.7K 1/16W(1608)
R355	1-218-708-11	s	RESISTOR,CHIP 4.7K 1/16W(1608)
R356	1-216-864-11	s	CONDUCTOR, CHIP (1608)
R359	1-218-652-11	s	RESISTOR,CHIP 22 1/16W (1608)
R400	1-218-740-11	s	RESISTOR,CHIP 100K 1/16W(1608)
R401	1-216-864-11	s	CONDUCTOR, CHIP (1608)
R402	1-218-660-91	s	RESISTOR,CHIP 47 1/16W (1608)
R403	1-218-660-91	s	RESISTOR,CHIP 47 1/16W (1608)
R404	1-216-864-11	s	CONDUCTOR, CHIP (1608)
R421	1-218-668-11	s	RESISTOR,CHIP 100 1/16W (1608)
R422	1-218-668-11	s	RESISTOR,CHIP 100 1/16W (1608)

(DPR-155 BOARD [SUFFIX 13] for HDW-M and MSW)

Ref. No. or Q'ty	Part No.	SP	Description
R423	1-218-668-11	s	RESISTOR,CHIP 100 1/16W (1608)
R424	1-218-668-11	s	RESISTOR,CHIP 100 1/16W (1608)
R428	1-218-668-11	s	RESISTOR,CHIP 100 1/16W (1608)
R429	1-218-668-11	s	RESISTOR,CHIP 100 1/16W (1608)
R430	1-218-668-11	s	RESISTOR,CHIP 100 1/16W (1608)
R431	1-218-668-11	s	RESISTOR,CHIP 100 1/16W (1608)
R432	1-218-652-11	s	RESISTOR,CHIP 22 1/16W (1608)
R433	1-218-652-11	s	RESISTOR,CHIP 22 1/16W (1608)
R434	1-218-652-11	s	RESISTOR,CHIP 22 1/16W (1608)
R435	1-216-864-11	s	CONDUCTOR, CHIP (1608)
R436	1-216-864-11	s	CONDUCTOR, CHIP (1608)
R437	1-218-660-91	s	RESISTOR,CHIP 47 1/16W (1608)
R439	1-216-864-11	s	CONDUCTOR, CHIP (1608)
R440	1-218-740-11	s	RESISTOR,CHIP 100K 1/16W(1608)
R442	1-218-660-91	s	RESISTOR,CHIP 47 1/16W (1608)
R443	1-218-716-11	s	RESISTOR,CHIP 10K 1/16W(1608)
R502	1-216-864-11	s	CONDUCTOR, CHIP (1608)
R503	1-216-864-11	s	CONDUCTOR, CHIP (1608)
R600	1-216-864-11	s	CONDUCTOR, CHIP (1608)
R601	1-216-864-11	s	CONDUCTOR, CHIP (1608)
R603	1-216-864-11	s	CONDUCTOR, CHIP (1608)
R605	1-216-864-11	s	CONDUCTOR, CHIP (1608)
R606	1-216-864-11	s	CONDUCTOR, CHIP (1608)
R610	1-216-864-11	s	CONDUCTOR, CHIP (1608)
R613	1-218-716-11	s	RESISTOR,CHIP 10K 1/16W(1608)
R614	1-218-716-11	s	RESISTOR,CHIP 10K 1/16W(1608)
R617	1-216-864-11	s	CONDUCTOR, CHIP (1608)
R715	1-216-864-11	s	CONDUCTOR, CHIP (1608)
R716	1-216-864-11	s	CONDUCTOR, CHIP (1608)
R717	1-216-864-11	s	CONDUCTOR, CHIP (1608)
R718	1-216-864-11	s	CONDUCTOR, CHIP (1608)
R719	1-216-864-11	s	CONDUCTOR, CHIP (1608)
R720	1-216-864-11	s	CONDUCTOR, CHIP (1608)
R722	1-216-864-11	s	CONDUCTOR, CHIP (1608)
R723	1-216-864-11	s	CONDUCTOR, CHIP (1608)
R724	1-216-864-11	s	CONDUCTOR, CHIP (1608)
R725	1-216-864-11	s	CONDUCTOR, CHIP (1608)
R726	1-216-864-11	s	CONDUCTOR, CHIP (1608)
R727	1-216-864-11	s	CONDUCTOR, CHIP (1608)
R728	1-216-864-11	s	CONDUCTOR, CHIP (1608)
R729	1-216-864-11	s	CONDUCTOR, CHIP (1608)
R738	1-218-692-11	s	RESISTOR,CHIP 1.0K 1/16W(1608)
R739	1-218-692-11	s	RESISTOR,CHIP 1.0K 1/16W(1608)
R740	1-218-692-11	s	RESISTOR,CHIP 1.0K 1/16W(1608)
R748	1-216-864-11	s	CONDUCTOR, CHIP (1608)
R749	1-216-864-11	s	CONDUCTOR, CHIP (1608)
R750	1-216-864-11	s	CONDUCTOR, CHIP (1608)
R751	1-216-864-11	s	CONDUCTOR, CHIP (1608)
R752	1-216-864-11	s	CONDUCTOR, CHIP (1608)
R753	1-216-864-11	s	CONDUCTOR, CHIP (1608)
R755	1-216-864-11	s	CONDUCTOR, CHIP (1608)
R756	1-216-864-11	s	CONDUCTOR, CHIP (1608)
R757	1-216-864-11	s	CONDUCTOR, CHIP (1608)
R758	1-216-864-11	s	CONDUCTOR, CHIP (1608)
R759	1-216-864-11	s	CONDUCTOR, CHIP (1608)
R760	1-216-864-11	s	CONDUCTOR, CHIP (1608)
R761	1-216-864-11	s	CONDUCTOR, CHIP (1608)
R762	1-216-864-11	s	CONDUCTOR, CHIP (1608)
R771	1-218-692-11	s	RESISTOR,CHIP 1.0K 1/16W(1608)

(DPR-155 BOARD [SUFFIX 13] for HDW-M and MSW)

Ref. No. or Q'ty	Part No.	SP	Description
R772	1-218-692-11	s	RESISTOR,CHIP 1.0K 1/16W(1608)
R773	1-218-692-11	s	RESISTOR,CHIP 1.0K 1/16W(1608)
R781	1-216-864-11	s	CONDUCTOR, CHIP (1608)
R782	1-216-864-11	s	CONDUCTOR, CHIP (1608)
R783	1-216-864-11	s	CONDUCTOR, CHIP (1608)
R784	1-216-864-11	s	CONDUCTOR, CHIP (1608)
R785	1-216-864-11	s	CONDUCTOR, CHIP (1608)
R786	1-216-864-11	s	CONDUCTOR, CHIP (1608)
R788	1-216-864-11	s	CONDUCTOR, CHIP (1608)
R789	1-216-864-11	s	CONDUCTOR, CHIP (1608)
R790	1-216-864-11	s	CONDUCTOR, CHIP (1608)
R791	1-216-864-11	s	CONDUCTOR, CHIP (1608)
R792	1-216-864-11	s	CONDUCTOR, CHIP (1608)
R793	1-216-864-11	s	CONDUCTOR, CHIP (1608)
R794	1-216-864-11	s	CONDUCTOR, CHIP (1608)
R795	1-216-864-11	s	CONDUCTOR, CHIP (1608)
R801	1-216-864-11	s	CONDUCTOR, CHIP (1608)
R803	1-216-864-11	s	CONDUCTOR, CHIP (1608)
R805	1-218-708-11	s	RESISTOR,CHIP 4.7K 1/16W(1608)
R806	1-218-708-11	s	RESISTOR,CHIP 4.7K 1/16W(1608)
R807	1-218-708-11	s	RESISTOR,CHIP 4.7K 1/16W(1608)
R811	1-216-864-11	s	CONDUCTOR, CHIP (1608)
R813	1-218-676-11	s	RESISTOR,CHIP 220 1/16W(1608)
R814	1-218-676-11	s	RESISTOR,CHIP 220 1/16W(1608)
R815	1-218-676-11	s	RESISTOR,CHIP 220 1/16W(1608)
R820	1-218-652-11	s	RESISTOR,CHIP 22 1/16W (1608)
R822	1-218-652-11	s	RESISTOR,CHIP 22 1/16W (1608)
R823	1-218-652-11	s	RESISTOR,CHIP 22 1/16W (1608)
R824	1-218-652-11	s	RESISTOR,CHIP 22 1/16W (1608)
R825	1-218-652-11	s	RESISTOR,CHIP 22 1/16W (1608)
R826	1-218-652-11	s	RESISTOR,CHIP 22 1/16W (1608)
R827	1-218-652-11	s	RESISTOR,CHIP 22 1/16W (1608)
R828	1-218-652-11	s	RESISTOR,CHIP 22 1/16W (1608)
R829	1-218-652-11	s	RESISTOR,CHIP 22 1/16W (1608)
R831	1-218-652-11	s	RESISTOR,CHIP 22 1/16W (1608)
R834	1-218-740-11	s	RESISTOR,CHIP 100K 1/16W(1608)
R835	1-218-740-11	s	RESISTOR,CHIP 100K 1/16W(1608)
R839	1-216-864-11	s	CONDUCTOR, CHIP (1608)
R841	1-218-652-11	s	RESISTOR,CHIP 22 1/16W (1608)
R854	1-218-652-11	s	RESISTOR,CHIP 22 1/16W (1608)
R855	1-218-652-11	s	RESISTOR,CHIP 22 1/16W (1608)
R856	1-218-652-11	s	RESISTOR,CHIP 22 1/16W (1608)
R857	1-218-652-11	s	RESISTOR,CHIP 22 1/16W (1608)
R858	1-218-652-11	s	RESISTOR,CHIP 22 1/16W (1608)
R859	1-218-652-11	s	RESISTOR,CHIP 22 1/16W (1608)
R860	1-218-652-11	s	RESISTOR,CHIP 22 1/16W (1608)
R861	1-218-652-11	s	RESISTOR,CHIP 22 1/16W (1608)
R862	1-218-652-11	s	RESISTOR,CHIP 22 1/16W (1608)
R863	1-218-716-11	s	RESISTOR,CHIP 10K 1/16W(1608)
R903	1-218-694-11	s	RESISTOR,CHIP 1.2K1/16W(1608)
R904	1-218-692-11	s	RESISTOR,CHIP 1.0K 1/16W(1608)
R905	1-216-864-11	s	CONDUCTOR, CHIP (1608)
R906	1-216-864-11	s	CONDUCTOR, CHIP (1608)
R907	1-216-864-11	s	CONDUCTOR, CHIP (1608)
R908	1-216-864-11	s	CONDUCTOR, CHIP (1608)
R909	1-218-740-11	s	RESISTOR,CHIP 100K 1/16W(1608)
R910	1-218-679-11	s	RESISTOR,CHIP 300 1/16W (1608)
R911	1-218-716-11	s	RESISTOR,CHIP 10K 1/16W(1608)
R912	1-218-680-11	s	RESISTOR,CHIP 330 1/16W(1608)

(DPR-155 BOARD [SUFFIX 13] for HDW-M and MSW)

Ref. No. or Q'ty	Part No.	SP	Description
R913	1-216-864-11	s	CONDUCTOR, CHIP (1608)
R914	1-216-864-11	s	CONDUCTOR, CHIP (1608)
R915	1-218-740-11	s	RESISTOR,CHIP 100K 1/16W(1608)
R1004	1-218-692-11	s	RESISTOR,CHIP 1.0K 1/16W(1608)
R1005	1-218-692-11	s	RESISTOR,CHIP 1.0K 1/16W(1608)
R1006	1-218-692-11	s	RESISTOR,CHIP 1.0K 1/16W(1608)
R1014	1-216-864-11	s	CONDUCTOR, CHIP (1608)
R1015	1-216-864-11	s	CONDUCTOR, CHIP (1608)
R1016	1-216-864-11	s	CONDUCTOR, CHIP (1608)
R1017	1-216-864-11	s	CONDUCTOR, CHIP (1608)
R1018	1-216-864-11	s	CONDUCTOR, CHIP (1608)
R1019	1-216-864-11	s	CONDUCTOR, CHIP (1608)
R1021	1-216-864-11	s	CONDUCTOR, CHIP (1608)
R1022	1-216-864-11	s	CONDUCTOR, CHIP (1608)
R1023	1-216-864-11	s	CONDUCTOR, CHIP (1608)
R1024	1-216-864-11	s	CONDUCTOR, CHIP (1608)
R1025	1-216-864-11	s	CONDUCTOR, CHIP (1608)
R1026	1-216-864-11	s	CONDUCTOR, CHIP (1608)
R1027	1-216-864-11	s	CONDUCTOR, CHIP (1608)
R1028	1-216-864-11	s	CONDUCTOR, CHIP (1608)
R1037	1-216-864-11	s	CONDUCTOR, CHIP (1608)
R1038	1-216-864-11	s	CONDUCTOR, CHIP (1608)
R1039	1-216-864-11	s	CONDUCTOR, CHIP (1608)
R1040	1-216-864-11	s	CONDUCTOR, CHIP (1608)
R1042	1-218-692-11	s	RESISTOR,CHIP 1.0K 1/16W(1608)
R1043	1-218-692-11	s	RESISTOR,CHIP 1.0K 1/16W(1608)
R1044	1-218-692-11	s	RESISTOR,CHIP 1.0K 1/16W(1608)
R1052	1-218-740-11	s	RESISTOR,CHIP 100K 1/16W(1608)
R1053	1-218-740-11	s	RESISTOR,CHIP 100K 1/16W(1608)
R1054	1-216-864-11	s	CONDUCTOR, CHIP (1608)
R1055	1-216-864-11	s	CONDUCTOR, CHIP (1608)
R1056	1-216-864-11	s	CONDUCTOR, CHIP (1608)
RB100	1-236-907-11	s	RESISTOR BLOCK 100K (1608)
RB101	1-236-907-11	s	RESISTOR BLOCK 100K (1608)
RB102	1-239-409-11	s	RESISTOR NETWORK 47 (1608)
RB103	1-239-409-11	s	RESISTOR NETWORK 47 (1608)
RB104	1-236-907-11	s	RESISTOR BLOCK 100K (1608)
RB106	1-234-397-11	s	NETWORK, RES (8 GANG) 100K
RB107	1-234-397-11	s	NETWORK, RES (8 GANG) 100K
RB108	1-239-621-11	s	NETWORK RESISTOR 22 (1608)
RB109	1-239-621-11	s	NETWORK RESISTOR 22 (1608)
RB110	1-239-621-11	s	NETWORK RESISTOR 22 (1608)
RB111	1-239-621-11	s	NETWORK RESISTOR 22 (1608)
RB112	1-239-621-11	s	NETWORK RESISTOR 22 (1608)
RB113	1-234-397-11	s	NETWORK, RES (8 GANG) 100K
RB114	1-239-412-11	s	NETWORK, RESISTOR 100 (1608)
RB115	1-239-412-11	s	NETWORK, RESISTOR 100 (1608)
RB116	1-236-907-11	s	RESISTOR BLOCK 100K (1608)
RB117	1-234-397-11	s	NETWORK, RES (8 GANG) 100K
RB118	1-234-397-11	s	NETWORK, RES (8 GANG) 100K
RB119	1-234-397-11	s	NETWORK, RES (8 GANG) 100K
RB120	1-234-397-11	s	NETWORK, RES (8 GANG) 100K
RB121	1-239-412-11	s	NETWORK, RESISTOR 100 (1608)
RB122	1-239-412-11	s	NETWORK, RESISTOR 100 (1608)
RB123	1-234-397-11	s	NETWORK, RES (8 GANG) 100K
RB200	1-239-416-11	s	NETWORK,RESISTOR 220 (1608)
RB201	1-239-416-11	s	NETWORK,RESISTOR 220 (1608)
RB202	1-239-416-11	s	NETWORK,RESISTOR 220 (1608)

(DPR-155 BOARD [SUFFIX 13] for HDW-M and MSW)

Ref. No. or Q'ty	Part No.	SP	Description
RB203	1-239-416-11	s	NETWORK,RESISTOR 220 (1608)
RB204	1-239-416-11	s	NETWORK,RESISTOR 220 (1608)
RB205	1-239-409-11	s	RESISTOR NETWORK 47 (1608)
RB206	1-239-409-11	s	RESISTOR NETWORK 47 (1608)
RB207	1-239-409-11	s	RESISTOR NETWORK 47 (1608)
RB208	1-239-409-11	s	RESISTOR NETWORK 47 (1608)
RB209	1-239-409-11	s	RESISTOR NETWORK 47 (1608)
RB210	1-239-409-11	s	RESISTOR NETWORK 47 (1608)
RB250	1-239-621-11	s	NETWORK RESISTOR 22 (1608)
RB251	1-239-621-11	s	NETWORK RESISTOR 22 (1608)
RB252	1-239-621-11	s	NETWORK RESISTOR 22 (1608)
RB253	1-239-621-11	s	NETWORK RESISTOR 22 (1608)
RB254	1-239-621-11	s	NETWORK RESISTOR 22 (1608)
RB400	1-239-409-11	s	RESISTOR NETWORK 47 (1608)
RB401	1-239-409-11	s	RESISTOR NETWORK 47 (1608)
RB402	1-239-409-11	s	RESISTOR NETWORK 47 (1608)
RB403	1-239-409-11	s	RESISTOR NETWORK 47 (1608)
RB404	1-239-409-11	s	RESISTOR NETWORK 47 (1608)
RB500	1-239-430-11	s	NETWORK RESISTOR 4.7K (1608)
RB501	1-236-904-11	s	RESISTOR NETWORK 1K (1608)
RB502	1-236-904-11	s	RESISTOR NETWORK 1K (1608)
RB503	1-236-904-11	s	RESISTOR NETWORK 1K (1608)
RB504	1-236-904-11	s	RESISTOR NETWORK 1K (1608)
RB505	1-236-904-11	s	RESISTOR NETWORK 1K (1608)
RB506	1-236-904-11	s	RESISTOR NETWORK 1K (1608)
RB507	1-236-904-11	s	RESISTOR NETWORK 1K (1608)
RB508	1-236-904-11	s	RESISTOR NETWORK 1K (1608)
RB509	1-236-904-11	s	RESISTOR NETWORK 1K (1608)
RB510	1-236-904-11	s	RESISTOR NETWORK 1K (1608)
RB511	1-236-904-11	s	RESISTOR NETWORK 1K (1608)
RB512	1-236-904-11	s	RESISTOR NETWORK 1K (1608)
RB513	1-236-904-11	s	RESISTOR NETWORK 1K (1608)
RB514	1-236-904-11	s	RESISTOR NETWORK 1K (1608)
RB515	1-236-904-11	s	RESISTOR NETWORK 1K (1608)
RB516	1-239-711-11	s	NETWORK, RESISTOR 0 (1608)
RB517	1-239-711-11	s	NETWORK, RESISTOR 0 (1608)
RB518	1-239-711-11	s	NETWORK, RESISTOR 0 (1608)
RB700	1-236-907-11	s	RESISTOR BLOCK 100K (1608)
RB701	1-236-907-11	s	RESISTOR BLOCK 100K (1608)
RB702	1-236-907-11	s	RESISTOR BLOCK 100K (1608)
RB703	1-236-907-11	s	RESISTOR BLOCK 100K (1608)
RB704	1-236-907-11	s	RESISTOR BLOCK 100K (1608)
RB705	1-236-907-11	s	RESISTOR BLOCK 100K (1608)
RB706	1-236-907-11	s	RESISTOR BLOCK 100K (1608)
RB707	1-236-907-11	s	RESISTOR BLOCK 100K (1608)
RB708	1-236-907-11	s	RESISTOR BLOCK 100K (1608)
RB709	1-234-397-11	s	NETWORK, RES (8 GANG) 100K
RB710	1-234-397-11	s	NETWORK, RES (8 GANG) 100K
RB711	1-234-397-11	s	NETWORK, RES (8 GANG) 100K
RB712	1-234-397-11	s	NETWORK, RES (8 GANG) 100K
RB800	1-236-907-11	s	RESISTOR BLOCK 100K (1608)
RB801	1-236-907-11	s	RESISTOR BLOCK 100K (1608)
RB804	1-239-416-11	s	NETWORK,RESISTOR 220 (1608)
RB805	1-239-416-11	s	NETWORK,RESISTOR 220 (1608)
RB806	1-239-416-11	s	NETWORK,RESISTOR 220 (1608)
RB807	1-239-430-11	s	NETWORK RESISTOR 4.7K (1608)
RB808	1-239-409-11	s	RESISTOR NETWORK 47 (1608)
RB809	1-239-409-11	s	RESISTOR NETWORK 47 (1608)
RB810	1-239-409-11	s	RESISTOR NETWORK 47 (1608)

(DPR-155 BOARD [SUFFIX 13] for HDW-M and MSW)

Ref. No. or Q'ty	Part No.	SP	Description
RB811	1-239-409-11	s	RESISTOR NETWORK 47 (1608)
RB812	1-239-409-11	s	RESISTOR NETWORK 47 (1608)
RB813	1-236-907-11	s	RESISTOR BLOCK 100K (1608)
RB814	1-236-907-11	s	RESISTOR BLOCK 100K (1608)
RB815	1-236-907-11	s	RESISTOR BLOCK 100K (1608)
RB816	1-236-907-11	s	RESISTOR BLOCK 100K (1608)
RB817	1-239-430-11	s	NETWORK RESISTOR 4.7K (1608)
RB818	1-236-908-11	s	RESISTOR,NETWORK 10K (3216)
S800	1-692-270-41	s	SWITCH, SLIDE
X200	1-781-809-21	s	OSCILLATOR, CRYSTAL (SMD)

DPR-155C BOARD [SUFFIX 14] for MSW-2000

[Lot No. 431 - 554] MSW-2000

Ref. No. or Q'ty	Part No.	SP	Description
1pc	A-8345-580-A	s	MOUNTED CIRCUIT BOARD, DPR-155
4pcs	3-191-747-01	o	SUPPORT (M3), HEXAGON
8pcs	7-682-545-04	s	SCREW +B3X4
1pc	3-179-084-11	s	LEVER (R), C BOARD
1pc	3-179-085-11	s	LEVER (L), C BOARD
C100	1-131-992-11	s	CAP, CERAMIC 100000PF F 1608
C101	1-131-992-11	s	CAP, CERAMIC 100000PF F 1608
C102	1-162-927-11	s	CAPACITOR,CERAMIC 100PF/50V CH
C103	1-126-394-11	s	CAPACITOR,ELECT 10MF/16V(CHIP)
C104	1-131-992-11	s	CAP, CERAMIC 100000PF F 1608
C105	1-131-992-11	s	CAP, CERAMIC 100000PF F 1608
C106	1-131-992-11	s	CAP, CERAMIC 100000PF F 1608
C107	1-131-992-11	s	CAP, CERAMIC 100000PF F 1608
C108	1-131-992-11	s	CAP, CERAMIC 100000PF F 1608
C109	1-131-992-11	s	CAP, CERAMIC 100000PF F 1608
C110	1-131-992-11	s	CAP, CERAMIC 100000PF F 1608
C111	1-131-992-11	s	CAP, CERAMIC 100000PF F 1608
C112	1-131-992-11	s	CAP, CERAMIC 100000PF F 1608
C113	1-131-992-11	s	CAP, CERAMIC 100000PF F 1608
C114	1-131-992-11	s	CAP, CERAMIC 100000PF F 1608
C115	1-131-992-11	s	CAP, CERAMIC 100000PF F 1608
C116	1-131-992-11	s	CAP, CERAMIC 100000PF F 1608
C117	1-131-992-11	s	CAP, CERAMIC 100000PF F 1608
C118	1-131-992-11	s	CAP, CERAMIC 100000PF F 1608
C119	1-131-992-11	s	CAP, CERAMIC 100000PF F 1608
C120	1-131-992-11	s	CAP, CERAMIC 100000PF F 1608
C121	1-131-992-11	s	CAP, CERAMIC 100000PF F 1608
C122	1-131-992-11	s	CAP, CERAMIC 100000PF F 1608
C123	1-131-992-11	s	CAP, CERAMIC 100000PF F 1608
C124	1-131-992-11	s	CAP, CERAMIC 100000PF F 1608
C125	1-131-992-11	s	CAP, CERAMIC 100000PF F 1608
C126	1-131-992-11	s	CAP, CERAMIC 100000PF F 1608
C127	1-131-992-11	s	CAP, CERAMIC 100000PF F 1608
C200	1-126-394-11	s	CAPACITOR,ELECT 10MF/16V(CHIP)
C201	1-131-992-11	s	CAP, CERAMIC 100000PF F 1608
C202	1-131-992-11	s	CAP, CERAMIC 100000PF F 1608
C203	1-131-992-11	s	CAP, CERAMIC 100000PF F 1608
C204	1-131-992-11	s	CAP, CERAMIC 100000PF F 1608
C205	1-126-394-11	s	CAPACITOR,ELECT 10MF/16V(CHIP)
C206	1-126-394-11	s	CAPACITOR,ELECT 10MF/16V(CHIP)
C207	1-131-992-11	s	CAP, CERAMIC 100000PF F 1608
C232	1-126-394-11	s	CAPACITOR,ELECT 10MF/16V(CHIP)
C233	1-131-992-11	s	CAP, CERAMIC 100000PF F 1608
C235	1-131-992-11	s	CAP, CERAMIC 100000PF F 1608
C237	1-131-992-11	s	CAP, CERAMIC 100000PF F 1608
C250	1-131-992-11	s	CAP, CERAMIC 100000PF F 1608
C251	1-131-992-11	s	CAP, CERAMIC 100000PF F 1608
C252	1-131-992-11	s	CAP, CERAMIC 100000PF F 1608
C253	1-131-992-11	s	CAP, CERAMIC 100000PF F 1608
C300	1-131-992-11	s	CAP, CERAMIC 100000PF F 1608
C301	1-131-992-11	s	CAP, CERAMIC 100000PF F 1608
C302	1-131-992-11	s	CAP, CERAMIC 100000PF F 1608
C303	1-131-992-11	s	CAP, CERAMIC 100000PF F 1608
C304	1-126-394-11	s	CAPACITOR,ELECT 10MF/16V(CHIP)
C305	1-131-992-11	s	CAP, CERAMIC 100000PF F 1608
C306	1-131-992-11	s	CAP, CERAMIC 100000PF F 1608
C307	1-131-992-11	s	CAP, CERAMIC 100000PF F 1608

(DPR-155C BOARD [SUFFIX 14] for MSW-2000)

Ref. No. or Q'ty	Part No.	SP	Description
C308	1-131-992-11	s	CAP, CERAMIC 100000PF F 1608
C309	1-131-992-11	s	CAP, CERAMIC 100000PF F 1608
C310	1-131-992-11	s	CAP, CERAMIC 100000PF F 1608
C311	1-131-992-11	s	CAP, CERAMIC 100000PF F 1608
C312	1-131-992-11	s	CAP, CERAMIC 100000PF F 1608
C313	1-131-992-11	s	CAP, CERAMIC 100000PF F 1608
C314	1-126-394-11	s	CAPACITOR,ELECT 10MF/16V(CHIP)
C315	1-131-992-11	s	CAP, CERAMIC 100000PF F 1608
C316	1-131-992-11	s	CAP, CERAMIC 100000PF F 1608
C320	1-131-992-11	s	CAP, CERAMIC 100000PF F 1608
C321	1-131-992-11	s	CAP, CERAMIC 100000PF F 1608
C322	1-131-992-11	s	CAP, CERAMIC 100000PF F 1608
C323	1-131-992-11	s	CAP, CERAMIC 100000PF F 1608
C324	1-131-992-11	s	CAP, CERAMIC 100000PF F 1608
C325	1-131-992-11	s	CAP, CERAMIC 100000PF F 1608
C326	1-131-992-11	s	CAP, CERAMIC 100000PF F 1608
C327	1-131-992-11	s	CAP, CERAMIC 100000PF F 1608
C328	1-131-992-11	s	CAP, CERAMIC 100000PF F 1608
C329	1-131-992-11	s	CAP, CERAMIC 100000PF F 1608
C330	1-131-992-11	s	CAP, CERAMIC 100000PF F 1608
C331	1-126-394-11	s	CAPACITOR,ELECT 10MF/16V(CHIP)
C332	1-131-992-11	s	CAP, CERAMIC 100000PF F 1608
C333	1-131-992-11	s	CAP, CERAMIC 100000PF F 1608
C334	1-131-992-11	s	CAP, CERAMIC 100000PF F 1608
C335	1-131-992-11	s	CAP, CERAMIC 100000PF F 1608
C336	1-131-992-11	s	CAP, CERAMIC 100000PF F 1608
C337	1-131-992-11	s	CAP, CERAMIC 100000PF F 1608
C338	1-131-992-11	s	CAP, CERAMIC 100000PF F 1608
C339	1-131-992-11	s	CAP, CERAMIC 100000PF F 1608
C404	1-131-992-11	s	CAP, CERAMIC 100000PF F 1608
C412	1-126-394-11	s	CAPACITOR,ELECT 10MF/16V(CHIP)
C413	1-131-992-11	s	CAP, CERAMIC 100000PF F 1608
C415	1-131-992-11	s	CAP, CERAMIC 100000PF F 1608
C417	1-131-992-11	s	CAP, CERAMIC 100000PF F 1608
C418	1-126-394-11	s	CAPACITOR,ELECT 10MF/16V(CHIP)
C419	1-131-992-11	s	CAP, CERAMIC 100000PF F 1608
C420	1-131-992-11	s	CAP, CERAMIC 100000PF F 1608
C421	1-131-992-11	s	CAP, CERAMIC 100000PF F 1608
C422	1-131-992-11	s	CAP, CERAMIC 100000PF F 1608
C423	1-131-992-11	s	CAP, CERAMIC 100000PF F 1608
C424	1-131-992-11	s	CAP, CERAMIC 100000PF F 1608
C425	1-131-992-11	s	CAP, CERAMIC 100000PF F 1608
C426	1-131-992-11	s	CAP, CERAMIC 100000PF F 1608
C427	1-131-992-11	s	CAP, CERAMIC 100000PF F 1608
C428	1-131-992-11	s	CAP, CERAMIC 100000PF F 1608
C429	1-131-992-11	s	CAP, CERAMIC 100000PF F 1608
C430	1-131-992-11	s	CAP, CERAMIC 100000PF F 1608
C431	1-131-992-11	s	CAP, CERAMIC 100000PF F 1608
C432	1-131-992-11	s	CAP, CERAMIC 100000PF F 1608
C433	1-126-394-11	s	CAPACITOR,ELECT 10MF/16V(CHIP)
C434	1-126-394-11	s	CAPACITOR,ELECT 10MF/16V(CHIP)
C435	1-131-992-11	s	CAP, CERAMIC 100000PF F 1608
C437	1-131-992-11	s	CAP, CERAMIC 100000PF F 1608
C439	1-131-992-11	s	CAP, CERAMIC 100000PF F 1608
C440	1-131-992-11	s	CAP, CERAMIC 100000PF F 1608
C600	1-104-851-11	s	CAPACITOR,TANTALUM 10MF/10V
C601	1-131-992-11	s	CAP, CERAMIC 100000PF F 1608
C602	1-131-992-11	s	CAP, CERAMIC 100000PF F 1608
C603	1-131-992-11	s	CAP, CERAMIC 100000PF F 1608

(DPR-155C BOARD [SUFFIX 14] for MSW-2000)

Ref. No. or Q'ty	Part No.	SP	Description
C604	1-131-992-11	s	CAP, CERAMIC 100000PF F 1608
C605	1-131-992-11	s	CAP, CERAMIC 100000PF F 1608
C606	1-131-992-11	s	CAP, CERAMIC 100000PF F 1608
C607	1-126-394-11	s	CAPACITOR,ELECT 10MF/16V(CHIP)
C608	1-131-992-11	s	CAP, CERAMIC 100000PF F 1608
C609	1-131-992-11	s	CAP, CERAMIC 100000PF F 1608
C610	1-131-992-11	s	CAP, CERAMIC 100000PF F 1608
C611	1-131-992-11	s	CAP, CERAMIC 100000PF F 1608
C612	1-131-992-11	s	CAP, CERAMIC 100000PF F 1608
C613	1-131-992-11	s	CAP, CERAMIC 100000PF F 1608
C614	1-131-992-11	s	CAP, CERAMIC 100000PF F 1608
C615	1-131-992-11	s	CAP, CERAMIC 100000PF F 1608
C616	1-131-992-11	s	CAP, CERAMIC 100000PF F 1608
C617	1-131-992-11	s	CAP, CERAMIC 100000PF F 1608
C618	1-131-992-11	s	CAP, CERAMIC 100000PF F 1608
C619	1-131-992-11	s	CAP, CERAMIC 100000PF F 1608
C620	1-131-992-11	s	CAP, CERAMIC 100000PF F 1608
C621	1-131-992-11	s	CAP, CERAMIC 100000PF F 1608
C622	1-131-992-11	s	CAP, CERAMIC 100000PF F 1608
C623	1-131-992-11	s	CAP, CERAMIC 100000PF F 1608
C624	1-131-992-11	s	CAP, CERAMIC 100000PF F 1608
C625	1-131-992-11	s	CAP, CERAMIC 100000PF F 1608
C626	1-131-992-11	s	CAP, CERAMIC 100000PF F 1608
C627	1-131-992-11	s	CAP, CERAMIC 100000PF F 1608
C628	1-131-992-11	s	CAP, CERAMIC 100000PF F 1608
C629	1-131-992-11	s	CAP, CERAMIC 100000PF F 1608
C630	1-104-851-11	s	CAPACITOR,TANTALUM 10MF/10V
C631	1-104-851-11	s	CAPACITOR,TANTALUM 10MF/10V
C632	1-131-992-11	s	CAP, CERAMIC 100000PF F 1608
C633	1-131-992-11	s	CAP, CERAMIC 100000PF F 1608
C634	1-131-992-11	s	CAP, CERAMIC 100000PF F 1608
C635	1-131-992-11	s	CAP, CERAMIC 100000PF F 1608
C636	1-131-992-11	s	CAP, CERAMIC 100000PF F 1608
C637	1-131-992-11	s	CAP, CERAMIC 100000PF F 1608
C638	1-131-992-11	s	CAP, CERAMIC 100000PF F 1608
C639	1-131-992-11	s	CAP, CERAMIC 100000PF F 1608
C640	1-131-992-11	s	CAP, CERAMIC 100000PF F 1608
C641	1-104-851-11	s	CAPACITOR,TANTALUM 10MF/10V
C700	1-131-992-11	s	CAP, CERAMIC 100000PF F 1608
C701	1-113-503-11	s	CAPACITOR,CERAMIC 3900PF CH
C702	1-162-968-11	s	CAPACITOR,CERAMIC 4700PF/50V B
C703	1-131-992-11	s	CAP, CERAMIC 100000PF F 1608
C704	1-131-992-11	s	CAP, CERAMIC 100000PF F 1608
C705	1-131-992-11	s	CAP, CERAMIC 100000PF F 1608
C706	1-131-992-11	s	CAP, CERAMIC 100000PF F 1608
C707	1-131-992-11	s	CAP, CERAMIC 100000PF F 1608
C708	1-131-992-11	s	CAP, CERAMIC 100000PF F 1608
C709	1-131-992-11	s	CAP, CERAMIC 100000PF F 1608
C710	1-131-992-11	s	CAP, CERAMIC 100000PF F 1608
C711	1-131-992-11	s	CAP, CERAMIC 100000PF F 1608
C712	1-131-992-11	s	CAP, CERAMIC 100000PF F 1608
C713	1-113-503-11	s	CAPACITOR,CERAMIC 3900PF CH
C714	1-162-968-11	s	CAPACITOR,CERAMIC 4700PF/50V B
C715	1-131-992-11	s	CAP, CERAMIC 100000PF F 1608
C716	1-131-992-11	s	CAP, CERAMIC 100000PF F 1608
C717	1-131-992-11	s	CAP, CERAMIC 100000PF F 1608
C718	1-131-992-11	s	CAP, CERAMIC 100000PF F 1608
C719	1-131-992-11	s	CAP, CERAMIC 100000PF F 1608
C720	1-131-992-11	s	CAP, CERAMIC 100000PF F 1608

(DPR-155C BOARD [SUFFIX 14] for MSW-2000)

Ref. No. or Q'ty	Part No.	SP	Description
C721	1-131-992-11	s	CAP, CERAMIC 100000PF F 1608
C722	1-131-992-11	s	CAP, CERAMIC 100000PF F 1608
C723	1-131-992-11	s	CAP, CERAMIC 100000PF F 1608
C724	1-131-992-11	s	CAP, CERAMIC 100000PF F 1608
C725	1-113-503-11	s	CAPACITOR,CERAMIC 3900PF CH
C726	1-162-968-11	s	CAPACITOR,CERAMIC 4700PF/50V B
C727	1-131-992-11	s	CAP, CERAMIC 100000PF F 1608
C728	1-131-992-11	s	CAP, CERAMIC 100000PF F 1608
C729	1-131-992-11	s	CAP, CERAMIC 100000PF F 1608
C730	1-131-992-11	s	CAP, CERAMIC 100000PF F 1608
C731	1-131-992-11	s	CAP, CERAMIC 100000PF F 1608
C732	1-131-992-11	s	CAP, CERAMIC 100000PF F 1608
C733	1-131-992-11	s	CAP, CERAMIC 100000PF F 1608
C734	1-131-992-11	s	CAP, CERAMIC 100000PF F 1608
C735	1-131-992-11	s	CAP, CERAMIC 100000PF F 1608
C736	1-131-992-11	s	CAP, CERAMIC 100000PF F 1608
C737	1-113-503-11	s	CAPACITOR,CERAMIC 3900PF CH
C738	1-162-968-11	s	CAPACITOR,CERAMIC 4700PF/50V B
C739	1-131-992-11	s	CAP, CERAMIC 100000PF F 1608
C740	1-131-992-11	s	CAP, CERAMIC 100000PF F 1608
C741	1-131-992-11	s	CAP, CERAMIC 100000PF F 1608
C742	1-131-992-11	s	CAP, CERAMIC 100000PF F 1608
C743	1-131-992-11	s	CAP, CERAMIC 100000PF F 1608
C744	1-131-992-11	s	CAP, CERAMIC 100000PF F 1608
C745	1-131-992-11	s	CAP, CERAMIC 100000PF F 1608
C746	1-131-992-11	s	CAP, CERAMIC 100000PF F 1608
C747	1-131-992-11	s	CAP, CERAMIC 100000PF F 1608
C748	1-131-992-11	s	CAP, CERAMIC 100000PF F 1608
C800	1-126-394-11	s	CAPACITOR,ELECT 10MF/16V(CHIP)
C801	1-131-992-11	s	CAP, CERAMIC 100000PF F 1608
C802	1-131-992-11	s	CAP, CERAMIC 100000PF F 1608
C803	1-131-992-11	s	CAP, CERAMIC 100000PF F 1608
C804	1-131-992-11	s	CAP, CERAMIC 100000PF F 1608
C805	1-131-992-11	s	CAP, CERAMIC 100000PF F 1608
C806	1-131-992-11	s	CAP, CERAMIC 100000PF F 1608
C807	1-131-992-11	s	CAP, CERAMIC 100000PF F 1608
C808	1-131-992-11	s	CAP, CERAMIC 100000PF F 1608
C809	1-104-915-11	s	CAPACITOR,CHIP 2.2MF/20V
C810	1-131-992-11	s	CAP, CERAMIC 100000PF F 1608
C811	1-131-992-11	s	CAP, CERAMIC 100000PF F 1608
C812	1-126-392-11	s	CAPACITOR,CHIP ELECT100MF/6.3V
C813	1-126-392-11	s	CAPACITOR,CHIP ELECT100MF/6.3V
C814	1-131-992-11	s	CAP, CERAMIC 100000PF F 1608
C815	1-104-915-11	s	CAPACITOR,CHIP 2.2MF/20V
C816	1-131-992-11	s	CAP, CERAMIC 100000PF F 1608
C817	1-131-992-11	s	CAP, CERAMIC 100000PF F 1608
C818	1-131-992-11	s	CAP, CERAMIC 100000PF F 1608
C819	1-126-392-11	s	CAPACITOR,CHIP ELECT100MF/6.3V
C820	1-131-992-11	s	CAP, CERAMIC 100000PF F 1608
C821	1-126-392-11	s	CAPACITOR,CHIP ELECT100MF/6.3V
C822	1-126-392-11	s	CAPACITOR,CHIP ELECT100MF/6.3V
C823	1-131-992-11	s	CAP, CERAMIC 100000PF F 1608
C824	1-126-392-11	s	CAPACITOR,CHIP ELECT100MF/6.3V
C827	1-131-992-11	s	CAP, CERAMIC 100000PF F 1608
C829	1-131-992-11	s	CAP, CERAMIC 100000PF F 1608
C831	1-131-992-11	s	CAP, CERAMIC 100000PF F 1608
C832	1-131-992-11	s	CAP, CERAMIC 100000PF F 1608
C833	1-131-992-11	s	CAP, CERAMIC 100000PF F 1608
C834	1-131-992-11	s	CAP, CERAMIC 100000PF F 1608

(DPR-155C BOARD [SUFFIX 14] for MSW-2000)

Ref. No. or Q'ty	Part No.	SP	Description
C835	1-131-992-11	s	CAP, CERAMIC 100000PF F 1608
C837	1-131-992-11	s	CAP, CERAMIC 100000PF F 1608
C838	1-131-992-11	s	CAP, CERAMIC 100000PF F 1608
C839	1-126-394-11	s	CAPACITOR,ELECT 10MF/16V(CHIP)
C842	1-131-992-11	s	CAP, CERAMIC 100000PF F 1608
C843	1-131-992-11	s	CAP, CERAMIC 100000PF F 1608
C844	1-131-992-11	s	CAP, CERAMIC 100000PF F 1608
C845	1-131-992-11	s	CAP, CERAMIC 100000PF F 1608
C846	1-131-992-11	s	CAP, CERAMIC 100000PF F 1608
C847	1-131-992-11	s	CAP, CERAMIC 100000PF F 1608
C848	1-126-394-11	s	CAPACITOR,ELECT 10MF/16V(CHIP)
C849	1-126-394-11	s	CAPACITOR,ELECT 10MF/16V(CHIP)
C850	1-131-992-11	s	CAP, CERAMIC 100000PF F 1608
C851	1-131-992-11	s	CAP, CERAMIC 100000PF F 1608
C852	1-131-992-11	s	CAP, CERAMIC 100000PF F 1608
C853	1-126-394-11	s	CAPACITOR,ELECT 10MF/16V(CHIP)
C863	1-131-992-11	s	CAP, CERAMIC 100000PF F 1608
C864	1-131-992-11	s	CAP, CERAMIC 100000PF F 1608
C866	1-126-394-11	s	CAPACITOR,ELECT 10MF/16V(CHIP)
C912	1-131-992-11	s	CAP, CERAMIC 100000PF F 1608
C913	1-126-394-11	s	CAPACITOR,ELECT 10MF/16V(CHIP)
C914	1-126-394-11	s	CAPACITOR,ELECT 10MF/16V(CHIP)
C915	1-131-992-11	s	CAP, CERAMIC 100000PF F 1608
C916	1-131-992-11	s	CAP, CERAMIC 100000PF F 1608
C917	1-131-992-11	s	CAP, CERAMIC 100000PF F 1608
C918	1-131-992-11	s	CAP, CERAMIC 100000PF F 1608
C919	1-131-992-11	s	CAP, CERAMIC 100000PF F 1608
C920	1-131-992-11	s	CAP, CERAMIC 100000PF F 1608
C921	1-131-992-11	s	CAP, CERAMIC 100000PF F 1608
C922	1-131-992-11	s	CAP, CERAMIC 100000PF F 1608
C923	1-131-992-11	s	CAP, CERAMIC 100000PF F 1608
C924	1-131-992-11	s	CAP, CERAMIC 100000PF F 1608
C925	1-131-992-11	s	CAP, CERAMIC 100000PF F 1608
C926	1-131-992-11	s	CAP, CERAMIC 100000PF F 1608
C927	1-131-992-11	s	CAP, CERAMIC 100000PF F 1608
C928	1-131-992-11	s	CAP, CERAMIC 100000PF F 1608
C929	1-131-992-11	s	CAP, CERAMIC 100000PF F 1608
C930	1-131-992-11	s	CAP, CERAMIC 100000PF F 1608
C931	1-131-992-11	s	CAP, CERAMIC 100000PF F 1608
C932	1-131-992-11	s	CAP, CERAMIC 100000PF F 1608
C933	1-131-992-11	s	CAP, CERAMIC 100000PF F 1608
C934	1-131-992-11	s	CAP, CERAMIC 100000PF F 1608
C935	1-131-992-11	s	CAP, CERAMIC 100000PF F 1608
C936	1-131-992-11	s	CAP, CERAMIC 100000PF F 1608
C937	1-131-992-11	s	CAP, CERAMIC 100000PF F 1608
C938	1-131-992-11	s	CAP, CERAMIC 100000PF F 1608
C939	1-131-992-11	s	CAP, CERAMIC 100000PF F 1608
CN16	1-580-789-91	s	PIN, CONNECTOR 6P
E100	1-535-877-22	s	CHIP,CHECKER (TEST POINT)
E200	1-535-877-22	s	CHIP,CHECKER (TEST POINT)
E300	1-535-877-22	s	CHIP,CHECKER (TEST POINT)
E400	1-535-877-22	s	CHIP,CHECKER (TEST POINT)
E401	1-535-877-22	s	CHIP,CHECKER (TEST POINT)
E600	1-535-877-22	s	CHIP,CHECKER (TEST POINT)
E700	1-535-877-22	s	CHIP,CHECKER (TEST POINT)
E800	1-535-877-22	s	CHIP,CHECKER (TEST POINT)
F801	⚠ 1-576-270-11	s	FUSE CHIP 4A/125V (6125)

(DPR-155C BOARD [SUFFIX 14] for MSW-2000)

Ref. No. or Q'ty	Part No.	SP	Description
F802	⚠ 1-576-270-11	s	FUSE CHIP 4A/125V (6125)
F803	⚠ 1-576-270-11	s	FUSE CHIP 4A/125V (6125)
FB200	1-469-094-11	s	FERRITE, EMI (SMD)
FB600	1-469-094-11	s	FERRITE, EMI (SMD)
FB601	1-469-094-11	s	FERRITE, EMI (SMD)
FL200	1-239-898-22	s	FILTER, EMI (SMD)
FL600	1-233-674-21	s	FILTER, EMI
FL601	1-233-674-21	s	FILTER, EMI
FL602	1-233-674-21	s	FILTER, EMI
IC100	8-759-549-15	s	IC SN74LV245APWR
IC101	8-759-549-15	s	IC SN74LV245APWR
IC102	8-759-523-84	s	IC TC74VHC14FT (EL)
IC103	8-759-491-46	s	IC TC74VHCT04AFT (EL)
IC104	8-759-491-46	s	IC TC74VHCT04AFT (EL)
IC105	8-759-523-94	s	IC TC74VHC32FT(EL)
IC106	8-759-549-01	s	IC SN74LV125APWR
IC107	8-759-392-77	s	IC SN74LVC245APW (E20)
IC108	8-759-549-15	s	IC SN74LV245APWR
IC109	8-759-524-07	s	IC TC74VHC138FT(EL)
IC110	8-759-549-15	s	IC SN74LV245APWR
IC111	8-759-491-46	s	IC TC74VHCT04AFT (EL)
IC112	8-759-549-15	s	IC SN74LV245APWR
IC113	8-759-549-15	s	IC SN74LV245APWR
IC114	8-759-549-15	s	IC SN74LV245APWR
IC115	8-759-549-15	s	IC SN74LV245APWR
IC116	8-759-549-15	s	IC SN74LV245APWR
IC117	8-759-549-15	s	IC SN74LV245APWR
IC118	8-759-524-07	s	IC TC74VHC138FT(EL)
IC119	8-759-524-07	s	IC TC74VHC138FT(EL)
IC120	8-759-523-81	s	IC TC74VHC08FT(EL)
IC121	8-759-196-96	s	IC TC7SH08FU (TE85R)
IC122	8-759-523-92	s	IC TC74VHC21FT(EL)
IC123	8-759-549-15	s	IC SN74LV245APWR
IC124	8-752-392-03	s	IC CXD1095BR
IC125	8-759-196-96	s	IC TC7SH08FU (TE85R)
IC200	8-759-475-55	s	IC TC74LCX574FT(EL)
IC201	8-759-475-55	s	IC TC74LCX574FT(EL)
IC202	8-759-475-55	s	IC TC74LCX574FT(EL)
IC203	8-759-475-43	s	IC TC74LCX125FT(EL)
IC204	8-759-475-43	s	IC TC74LCX125FT(EL)
IC210	8-759-712-32	s	IC SN65LVDS389DBTR
IC212	8-759-712-32	s	IC SN65LVDS389DBTR
IC214	8-759-712-32	s	IC SN65LVDS389DBTR
IC216	8-759-271-86	s	IC TC7SH04FU
IC217	8-759-271-86	s	IC TC7SH04FU
IC250	8-759-392-77	s	IC SN74LVC245APW (E20)
IC251	8-759-392-77	s	IC SN74LVC245APW (E20)
IC252	8-759-392-77	s	IC SN74LVC245APW (E20)
IC253	8-759-475-43	s	IC TC74LCX125FT(EL)
IC301	8-759-449-09	s	IC CXD8945BR
IC302	8-759-524-10	s	IC TC74VHC157FT (EL)
IC303	8-759-524-10	s	IC TC74VHC157FT (EL)
IC307	6-700-497-01	s	IC MSM56V16800F-10TS-K
IC308	6-700-497-01	s	IC MSM56V16800F-10TS-K
IC309	6-700-497-01	s	IC MSM56V16800F-10TS-K
IC310	8-759-392-77	s	IC SN74LVC245APW (E20)
IC311	8-759-392-77	s	IC SN74LVC245APW (E20)
IC312	6-702-238-11	s	IC HY57V643220CT-7TR

(DPR-155C BOARD [SUFFIX 14] for MSW-2000)

Ref. No. or Q'ty	Part No.	SP	Description
IC401	8-759-475-43	s	IC TC74LCX125FT(EL)
IC402	8-759-712-31	s	IC SN65LVDT388DBTR
IC404	8-759-712-31	s	IC SN65LVDT388DBTR
IC406	8-759-639-86	s	IC SN65LVDS32DR
IC407	8-759-656-31	o	IC CXD9094AR
IC408	8-759-712-32	s	IC SN65LVDS389DBTR
IC410	8-759-712-32	s	IC SN65LVDS389DBTR
IC412	8-759-712-32	s	IC SN65LVDS389DBTR
IC413	8-759-639-86	s	IC SN65LVDS32DR
IC601	8-759-524-09	s	IC TC74VHC153FT (EL)
IC602	8-759-475-55	s	IC TC74LCX574FT(EL)
IC603	8-759-475-55	s	IC TC74LCX574FT(EL)
IC604	8-759-475-55	s	IC TC74LCX574FT(EL)
IC605	6-702-238-11	s	IC HY57V643220CT-7TR
IC606	6-702-238-11	s	IC HY57V643220CT-7TR
IC607	6-702-238-11	s	IC HY57V643220CT-7TR
IC700	8-752-392-03	s	IC CXD1095BR
IC701	6-702-254-01	s	IC DSPB56362PV100-1J21D
IC702	8-759-543-83	s	IC KM416V1204CT-L6
IC703	8-759-543-83	s	IC KM416V1204CT-L6
IC704	6-702-254-01	s	IC DSPB56362PV100-1J21D
IC705	8-759-543-83	s	IC KM416V1204CT-L6
IC706	8-759-543-83	s	IC KM416V1204CT-L6
IC707	6-702-254-01	s	IC DSPB56362PV100-1J21D
IC708	8-759-543-83	s	IC KM416V1204CT-L6
IC709	8-759-543-83	s	IC KM416V1204CT-L6
IC710	6-702-254-01	s	IC DSPB56362PV100-1J21D
IC711	8-759-543-83	s	IC KM416V1204CT-L6
IC712	8-759-543-83	s	IC KM416V1204CT-L6
IC801	8-759-549-15	s	IC SN74LV245APWR
IC802	8-759-196-96	s	IC TC7SH08FU (TE85R)
IC803	8-759-491-46	s	IC TC74VHCT04AFT (EL)
IC804	8-759-475-43	s	IC TC74LCX125FT(EL)
IC805	8-759-475-43	s	IC TC74LCX125FT(EL)
IC808	8-759-549-15	s	IC SN74LV245APWR
IC809	8-759-523-78	s	IC TC74VHC00FT(EL)
IC810	8-759-392-77	s	IC SN74LVC245APW (E20)
IC812	8-759-475-43	s	IC TC74LCX125FT(EL)
IC813	8-759-475-43	s	IC TC74LCX125FT(EL)
IC814	8-759-475-43	s	IC TC74LCX125FT(EL)
IC815	8-759-475-43	s	IC TC74LCX125FT(EL)
IC817	8-759-549-01	s	IC SN74LV125APWR
IC818	8-759-549-15	s	IC SN74LV245APWR
IC819	8-759-524-10	s	IC TC74VHC157FT (EL)
IC822	8-759-549-01	s	IC SN74LV125APWR
IC823	8-759-549-15	s	IC SN74LV245APWR
IC824	8-759-549-15	s	IC SN74LV245APWR
IC825	8-759-549-15	s	IC SN74LV245APWR
IC826	8-759-549-01	s	IC SN74LV125APWR
IC827	6-702-658-01	s	IC XC2S150-5PQ208C1
IC829	8-759-524-10	s	IC TC74VHC157FT (EL)
IC831	8-759-524-27	s	IC TC74VHC244FT(EL)
IC834	6-802-191-02	s	IC XC18V02-DPR155-V2.00
IC902	6-802-024-01	s	IC CXD9012BR
IC903	8-759-549-15	s	IC SN74LV245APWR
IC904	8-759-549-15	s	IC SN74LV245APWR
L100	1-412-056-11	s	INDUCTOR 4.7UH (3225)
L101	1-412-056-11	s	INDUCTOR 4.7UH (3225)

(DPR-155C BOARD [SUFFIX 14] for MSW-2000)

Ref. No. or Q'ty	Part No.	SP	Description
L102	1-412-056-11	s	INDUCTOR 4.7UH (3225)
L103	1-412-056-11	s	INDUCTOR 4.7UH (3225)
L200	1-412-056-11	s	INDUCTOR 4.7UH (3225)
L201	1-412-056-11	s	INDUCTOR 4.7UH (3225)
L204	1-412-056-11	s	INDUCTOR 4.7UH (3225)
L402	1-412-056-11	s	INDUCTOR 4.7UH (3225)
L405	1-412-056-11	s	INDUCTOR 4.7UH (3225)
L600	1-412-056-11	s	INDUCTOR 4.7UH (3225)
L800	1-406-864-21	s	COIL,CHOKE 4.7UH
L801	1-406-864-21	s	COIL,CHOKE 4.7UH
L802	1-406-864-21	s	COIL,CHOKE 4.7UH
L803	1-406-864-21	s	COIL,CHOKE 4.7UH
L804	1-412-056-11	s	INDUCTOR 4.7UH (3225)
L806	1-412-056-11	s	INDUCTOR 4.7UH (3225)
L807	1-412-056-11	s	INDUCTOR 4.7UH (3225)
L808	1-412-056-11	s	INDUCTOR 4.7UH (3225)
Q200	8-729-029-14	s	TRANSISTOR DTC144EUA-T106
Q400	8-729-029-14	s	TRANSISTOR DTC144EUA-T106
Q800	8-729-029-14	s	TRANSISTOR DTC144EUA-T106
Q801	8-729-140-63	s	TRANSISTOR 2SA1611-M5M6
Q802	8-729-045-53	s	TRANSISTOR SI4431DY-T1
R100	1-218-740-11	s	RESISTOR,CHIP 100K 1/16W(1608)
R101	1-218-740-11	s	RESISTOR,CHIP 100K 1/16W(1608)
R102	1-218-740-11	s	RESISTOR,CHIP 100K 1/16W(1608)
R103	1-218-740-11	s	RESISTOR,CHIP 100K 1/16W(1608)
R105	1-218-740-11	s	RESISTOR,CHIP 100K 1/16W(1608)
R106	1-218-660-91	s	RESISTOR,CHIP 47 1/16W (1608)
R107	1-218-660-91	s	RESISTOR,CHIP 47 1/16W (1608)
R108	1-218-660-91	s	RESISTOR,CHIP 47 1/16W (1608)
R109	1-218-660-91	s	RESISTOR,CHIP 47 1/16W (1608)
R110	1-218-740-11	s	RESISTOR,CHIP 100K 1/16W(1608)
R111	1-218-668-11	s	RESISTOR,CHIP 100 1/16W (1608)
R115	1-218-740-11	s	RESISTOR,CHIP 100K 1/16W(1608)
R117	1-218-708-11	s	RESISTOR,CHIP 4.7K 1/16W(1608)
R118	1-218-708-11	s	RESISTOR,CHIP 4.7K 1/16W(1608)
R122	1-218-708-11	s	RESISTOR,CHIP 4.7K 1/16W(1608)
R124	1-218-708-11	s	RESISTOR,CHIP 4.7K 1/16W(1608)
R126	1-218-708-11	s	RESISTOR,CHIP 4.7K 1/16W(1608)
R130	1-216-864-11	s	CONDUCTOR, CHIP (1608)
R131	1-216-864-11	s	CONDUCTOR, CHIP (1608)
R132	1-216-864-11	s	CONDUCTOR, CHIP (1608)
R133	1-216-864-11	s	CONDUCTOR, CHIP (1608)
R135	1-218-708-11	s	RESISTOR,CHIP 4.7K 1/16W(1608)
R136	1-218-652-11	s	RESISTOR,CHIP 22 1/10W (1608)
R141	1-216-864-11	s	CONDUCTOR, CHIP (1608)
R200	1-218-676-11	s	RESISTOR,CHIP 220 1/16W(1608)
R205	1-218-652-11	s	RESISTOR,CHIP 22 1/10W (1608)
R220	1-218-660-91	s	RESISTOR,CHIP 47 1/16W (1608)
R222	1-216-864-11	s	CONDUCTOR, CHIP (1608)
R223	1-216-864-11	s	CONDUCTOR, CHIP (1608)
R232	1-218-716-11	s	RESISTOR,CHIP 10K 1/16W(1608)
R250	1-218-652-11	s	RESISTOR,CHIP 22 1/10W (1608)
R251	1-218-652-11	s	RESISTOR,CHIP 22 1/10W (1608)
R252	1-218-652-11	s	RESISTOR,CHIP 22 1/10W (1608)
R253	1-218-652-11	s	RESISTOR,CHIP 22 1/10W (1608)
R254	1-218-652-11	s	RESISTOR,CHIP 22 1/10W (1608)
R255	1-218-652-11	s	RESISTOR,CHIP 22 1/10W (1608)
R256	1-218-652-11	s	RESISTOR,CHIP 22 1/10W (1608)

(DPR-155C BOARD [SUFFIX 14] for MSW-2000)

Ref. No. or Q'ty	Part No.	SP	Description
R257	1-218-740-11	s	RESISTOR,CHIP 100K 1/16W(1608)
R300	1-216-864-11	s	CONDUCTOR, CHIP (1608)
R301	1-216-864-11	s	CONDUCTOR, CHIP (1608)
R302	1-216-864-11	s	CONDUCTOR, CHIP (1608)
R303	1-218-708-11	s	RESISTOR,CHIP 4.7K 1/16W(1608)
R304	1-218-708-11	s	RESISTOR,CHIP 4.7K 1/16W(1608)
R305	1-218-708-11	s	RESISTOR,CHIP 4.7K 1/16W(1608)
R306	1-218-740-11	s	RESISTOR,CHIP 100K 1/16W(1608)
R307	1-218-708-11	s	RESISTOR,CHIP 4.7K 1/16W(1608)
R312	1-216-864-11	s	CONDUCTOR, CHIP (1608)
R313	1-216-864-11	s	CONDUCTOR, CHIP (1608)
R314	1-216-864-11	s	CONDUCTOR, CHIP (1608)
R315	1-216-864-11	s	CONDUCTOR, CHIP (1608)
R316	1-216-864-11	s	CONDUCTOR, CHIP (1608)
R317	1-218-740-11	s	RESISTOR,CHIP 100K 1/16W(1608)
R318	1-218-740-11	s	RESISTOR,CHIP 100K 1/16W(1608)
R319	1-218-740-11	s	RESISTOR,CHIP 100K 1/16W(1608)
R320	1-218-740-11	s	RESISTOR,CHIP 100K 1/16W(1608)
R321	1-218-740-11	s	RESISTOR,CHIP 100K 1/16W(1608)
R322	1-216-864-11	s	CONDUCTOR, CHIP (1608)
R323	1-216-864-11	s	CONDUCTOR, CHIP (1608)
R324	1-216-864-11	s	CONDUCTOR, CHIP (1608)
R325	1-216-864-11	s	CONDUCTOR, CHIP (1608)
R326	1-216-864-11	s	CONDUCTOR, CHIP (1608)
R327	1-216-864-11	s	CONDUCTOR, CHIP (1608)
R328	1-216-864-11	s	CONDUCTOR, CHIP (1608)
R329	1-216-864-11	s	CONDUCTOR, CHIP (1608)
R330	1-218-740-11	s	RESISTOR,CHIP 100K 1/16W(1608)
R331	1-216-864-11	s	CONDUCTOR, CHIP (1608)
R335	1-216-864-11	s	CONDUCTOR, CHIP (1608)
R338	1-218-708-11	s	RESISTOR,CHIP 4.7K 1/16W(1608)
R349	1-216-864-11	s	CONDUCTOR, CHIP (1608)
R351	1-218-652-11	s	RESISTOR,CHIP 22 1/10W (1608)
R352	1-218-652-11	s	RESISTOR,CHIP 22 1/10W (1608)
R353	1-218-708-11	s	RESISTOR,CHIP 4.7K 1/16W(1608)
R354	1-218-708-11	s	RESISTOR,CHIP 4.7K 1/16W(1608)
R355	1-218-708-11	s	RESISTOR,CHIP 4.7K 1/16W(1608)
R356	1-216-864-11	s	CONDUCTOR, CHIP (1608)
R359	1-218-652-11	s	RESISTOR,CHIP 22 1/10W (1608)
R400	1-218-740-11	s	RESISTOR,CHIP 100K 1/16W(1608)
R402	1-218-660-91	s	RESISTOR,CHIP 47 1/16W (1608)
R403	1-218-660-91	s	RESISTOR,CHIP 47 1/16W (1608)
R421	1-218-668-11	s	RESISTOR,CHIP 100 1/16W (1608)
R422	1-218-668-11	s	RESISTOR,CHIP 100 1/16W (1608)
R423	1-218-668-11	s	RESISTOR,CHIP 100 1/16W (1608)
R424	1-218-668-11	s	RESISTOR,CHIP 100 1/16W (1608)
R428	1-218-668-11	s	RESISTOR,CHIP 100 1/16W (1608)
R429	1-218-668-11	s	RESISTOR,CHIP 100 1/16W (1608)
R430	1-218-668-11	s	RESISTOR,CHIP 100 1/16W (1608)
R431	1-218-668-11	s	RESISTOR,CHIP 100 1/16W (1608)
R432	1-218-652-11	s	RESISTOR,CHIP 22 1/10W (1608)
R433	1-218-652-11	s	RESISTOR,CHIP 22 1/10W (1608)
R434	1-218-652-11	s	RESISTOR,CHIP 22 1/10W (1608)
R435	1-216-864-11	s	CONDUCTOR, CHIP (1608)
R436	1-216-864-11	s	CONDUCTOR, CHIP (1608)
R437	1-218-660-91	s	RESISTOR,CHIP 47 1/16W (1608)
R439	1-216-864-11	s	CONDUCTOR, CHIP (1608)
R440	1-218-740-11	s	RESISTOR,CHIP 100K 1/16W(1608)
R442	1-218-660-91	s	RESISTOR,CHIP 47 1/16W (1608)

(DPR-155C BOARD [SUFFIX 14] for MSW-2000)

Ref. No. or Q'ty	Part No.	SP	Description
R443	1-218-716-11	s	RESISTOR,CHIP 10K 1/16W(1608)
R600	1-216-864-11	s	CONDUCTOR, CHIP (1608)
R601	1-216-864-11	s	CONDUCTOR, CHIP (1608)
R603	1-216-864-11	s	CONDUCTOR, CHIP (1608)
R605	1-216-864-11	s	CONDUCTOR, CHIP (1608)
R606	1-216-864-11	s	CONDUCTOR, CHIP (1608)
R610	1-216-864-11	s	CONDUCTOR, CHIP (1608)
R613	1-218-716-11	s	RESISTOR,CHIP 10K 1/16W(1608)
R614	1-218-716-11	s	RESISTOR,CHIP 10K 1/16W(1608)
R617	1-216-864-11	s	CONDUCTOR, CHIP (1608)
R715	1-216-864-11	s	CONDUCTOR, CHIP (1608)
R716	1-216-864-11	s	CONDUCTOR, CHIP (1608)
R717	1-216-864-11	s	CONDUCTOR, CHIP (1608)
R718	1-216-864-11	s	CONDUCTOR, CHIP (1608)
R719	1-216-864-11	s	CONDUCTOR, CHIP (1608)
R720	1-216-864-11	s	CONDUCTOR, CHIP (1608)
R722	1-216-864-11	s	CONDUCTOR, CHIP (1608)
R723	1-216-864-11	s	CONDUCTOR, CHIP (1608)
R724	1-216-864-11	s	CONDUCTOR, CHIP (1608)
R725	1-216-864-11	s	CONDUCTOR, CHIP (1608)
R726	1-216-864-11	s	CONDUCTOR, CHIP (1608)
R727	1-216-864-11	s	CONDUCTOR, CHIP (1608)
R728	1-216-864-11	s	CONDUCTOR, CHIP (1608)
R729	1-216-864-11	s	CONDUCTOR, CHIP (1608)
R738	1-218-692-11	s	RESISTOR,CHIP 1.0K 1/16W(1608)
R739	1-218-692-11	s	RESISTOR,CHIP 1.0K 1/16W(1608)
R740	1-218-692-11	s	RESISTOR,CHIP 1.0K 1/16W(1608)
R748	1-216-864-11	s	CONDUCTOR, CHIP (1608)
R749	1-216-864-11	s	CONDUCTOR, CHIP (1608)
R750	1-216-864-11	s	CONDUCTOR, CHIP (1608)
R751	1-216-864-11	s	CONDUCTOR, CHIP (1608)
R752	1-216-864-11	s	CONDUCTOR, CHIP (1608)
R753	1-216-864-11	s	CONDUCTOR, CHIP (1608)
R755	1-216-864-11	s	CONDUCTOR, CHIP (1608)
R756	1-216-864-11	s	CONDUCTOR, CHIP (1608)
R757	1-216-864-11	s	CONDUCTOR, CHIP (1608)
R758	1-216-864-11	s	CONDUCTOR, CHIP (1608)
R759	1-216-864-11	s	CONDUCTOR, CHIP (1608)
R760	1-216-864-11	s	CONDUCTOR, CHIP (1608)
R761	1-216-864-11	s	CONDUCTOR, CHIP (1608)
R762	1-216-864-11	s	CONDUCTOR, CHIP (1608)
R771	1-218-692-11	s	RESISTOR,CHIP 1.0K 1/16W(1608)
R772	1-218-692-11	s	RESISTOR,CHIP 1.0K 1/16W(1608)
R773	1-218-692-11	s	RESISTOR,CHIP 1.0K 1/16W(1608)
R781	1-216-864-11	s	CONDUCTOR, CHIP (1608)
R782	1-216-864-11	s	CONDUCTOR, CHIP (1608)
R783	1-216-864-11	s	CONDUCTOR, CHIP (1608)
R784	1-216-864-11	s	CONDUCTOR, CHIP (1608)
R785	1-216-864-11	s	CONDUCTOR, CHIP (1608)
R786	1-216-864-11	s	CONDUCTOR, CHIP (1608)
R788	1-216-864-11	s	CONDUCTOR, CHIP (1608)
R789	1-216-864-11	s	CONDUCTOR, CHIP (1608)
R790	1-216-864-11	s	CONDUCTOR, CHIP (1608)
R791	1-216-864-11	s	CONDUCTOR, CHIP (1608)
R792	1-216-864-11	s	CONDUCTOR, CHIP (1608)
R793	1-216-864-11	s	CONDUCTOR, CHIP (1608)
R794	1-216-864-11	s	CONDUCTOR, CHIP (1608)
R795	1-216-864-11	s	CONDUCTOR, CHIP (1608)
R801	1-216-864-11	s	CONDUCTOR, CHIP (1608)

(DPR-155C BOARD [SUFFIX 14] for MSW-2000)

Ref. No. or Q'ty	Part No.	SP	Description
R802	1-216-821-11	s	RESISTOR,CHIP 1.0K 1/10W(1608)
R803	1-216-864-11	s	CONDUCTOR, CHIP (1608)
R804	1-216-821-11	s	RESISTOR,CHIP 1.0K 1/10W(1608)
R805	1-218-708-11	s	RESISTOR,CHIP 4.7K 1/16W(1608)
R806	1-218-708-11	s	RESISTOR,CHIP 4.7K 1/16W(1608)
R807	1-218-708-11	s	RESISTOR,CHIP 4.7K 1/16W(1608)
R808	1-216-815-11	s	RESISTOR,CHIP 330 1/10W 1608
R809	1-216-815-11	s	RESISTOR,CHIP 330 1/10W 1608
R811	1-216-864-11	s	CONDUCTOR, CHIP (1608)
R813	1-218-676-11	s	RESISTOR,CHIP 220 1/16W(1608)
R814	1-218-676-11	s	RESISTOR,CHIP 220 1/16W(1608)
R815	1-218-676-11	s	RESISTOR,CHIP 220 1/16W(1608)
R820	1-218-652-11	s	RESISTOR,CHIP 22 1/10W (1608)
R822	1-218-652-11	s	RESISTOR,CHIP 22 1/10W (1608)
R823	1-218-652-11	s	RESISTOR,CHIP 22 1/10W (1608)
R824	1-218-652-11	s	RESISTOR,CHIP 22 1/10W (1608)
R825	1-218-652-11	s	RESISTOR,CHIP 22 1/10W (1608)
R826	1-218-652-11	s	RESISTOR,CHIP 22 1/10W (1608)
R827	1-218-652-11	s	RESISTOR,CHIP 22 1/10W (1608)
R828	1-218-652-11	s	RESISTOR,CHIP 22 1/10W (1608)
R829	1-218-652-11	s	RESISTOR,CHIP 22 1/10W (1608)
R831	1-218-652-11	s	RESISTOR,CHIP 22 1/10W (1608)
R834	1-218-740-11	s	RESISTOR,CHIP 100K 1/16W(1608)
R835	1-218-740-11	s	RESISTOR,CHIP 100K 1/16W(1608)
R839	1-216-864-11	s	CONDUCTOR, CHIP (1608)
R841	1-218-652-11	s	RESISTOR,CHIP 22 1/10W (1608)
R854	1-218-652-11	s	RESISTOR,CHIP 22 1/10W (1608)
R855	1-218-652-11	s	RESISTOR,CHIP 22 1/10W (1608)
R856	1-218-652-11	s	RESISTOR,CHIP 22 1/10W (1608)
R857	1-218-652-11	s	RESISTOR,CHIP 22 1/10W (1608)
R858	1-218-652-11	s	RESISTOR,CHIP 22 1/10W (1608)
R859	1-218-652-11	s	RESISTOR,CHIP 22 1/10W (1608)
R860	1-218-652-11	s	RESISTOR,CHIP 22 1/10W (1608)
R861	1-218-652-11	s	RESISTOR,CHIP 22 1/10W (1608)
R862	1-218-652-11	s	RESISTOR,CHIP 22 1/10W (1608)
R863	1-218-716-11	s	RESISTOR,CHIP 10K 1/16W(1608)
R903	1-218-694-11	s	RESISTOR,CHIP 1.2K1/16W(1608)
R904	1-218-692-11	s	RESISTOR,CHIP 1.0K 1/16W(1608)
R905	1-216-864-11	s	CONDUCTOR, CHIP (1608)
R906	1-216-864-11	s	CONDUCTOR, CHIP (1608)
R907	1-216-864-11	s	CONDUCTOR, CHIP (1608)
R908	1-216-864-11	s	CONDUCTOR, CHIP (1608)
R909	1-218-740-11	s	RESISTOR,CHIP 100K 1/16W(1608)
R910	1-218-679-11	s	RESISTOR,CHIP 300 1/16W (1608)
R911	1-218-716-11	s	RESISTOR,CHIP 10K 1/16W(1608)
R912	1-218-680-11	s	RESISTOR,CHIP 330 1/16W(1608)
R913	1-216-864-11	s	CONDUCTOR, CHIP (1608)
R914	1-216-864-11	s	CONDUCTOR, CHIP (1608)
R915	1-218-740-11	s	RESISTOR,CHIP 100K 1/16W(1608)
R1004	1-218-692-11	s	RESISTOR,CHIP 1.0K 1/16W(1608)
R1005	1-218-692-11	s	RESISTOR,CHIP 1.0K 1/16W(1608)
R1006	1-218-692-11	s	RESISTOR,CHIP 1.0K 1/16W(1608)
R1014	1-216-864-11	s	CONDUCTOR, CHIP (1608)
R1015	1-216-864-11	s	CONDUCTOR, CHIP (1608)
R1016	1-216-864-11	s	CONDUCTOR, CHIP (1608)
R1017	1-216-864-11	s	CONDUCTOR, CHIP (1608)
R1018	1-216-864-11	s	CONDUCTOR, CHIP (1608)
R1019	1-216-864-11	s	CONDUCTOR, CHIP (1608)
R1021	1-216-864-11	s	CONDUCTOR, CHIP (1608)

(DPR-155C BOARD [SUFFIX 14] for MSW-2000)

Ref. No. or Q'ty	Part No.	SP	Description
R1022	1-216-864-11	s	CONDUCTOR, CHIP (1608)
R1023	1-216-864-11	s	CONDUCTOR, CHIP (1608)
R1024	1-216-864-11	s	CONDUCTOR, CHIP (1608)
R1025	1-216-864-11	s	CONDUCTOR, CHIP (1608)
R1026	1-216-864-11	s	CONDUCTOR, CHIP (1608)
R1027	1-216-864-11	s	CONDUCTOR, CHIP (1608)
R1028	1-216-864-11	s	CONDUCTOR, CHIP (1608)
R1037	1-216-864-11	s	CONDUCTOR, CHIP (1608)
R1038	1-216-864-11	s	CONDUCTOR, CHIP (1608)
R1039	1-216-864-11	s	CONDUCTOR, CHIP (1608)
R1040	1-216-864-11	s	CONDUCTOR, CHIP (1608)
R1042	1-218-692-11	s	RESISTOR,CHIP 1.0K 1/16W(1608)
R1043	1-218-692-11	s	RESISTOR,CHIP 1.0K 1/16W(1608)
R1044	1-218-692-11	s	RESISTOR,CHIP 1.0K 1/16W(1608)
R1052	1-218-740-11	s	RESISTOR,CHIP 100K 1/16W(1608)
R1053	1-218-740-11	s	RESISTOR,CHIP 100K 1/16W(1608)
R1054	1-216-864-11	s	CONDUCTOR, CHIP (1608)
R1055	1-216-864-11	s	CONDUCTOR, CHIP (1608)
R1056	1-216-864-11	s	CONDUCTOR, CHIP (1608)
RB100	1-236-907-11	s	RESISTOR BLOCK 100K (1608)
RB101	1-236-907-11	s	RESISTOR BLOCK 100K (1608)
RB102	1-239-409-11	s	RESISTOR NETWORK 47 (1608)
RB103	1-239-409-11	s	RESISTOR NETWORK 47 (1608)
RB104	1-236-907-11	s	RESISTOR BLOCK 100K (1608)
RB106	1-234-397-11	s	NETWORK, RES (8 GANG) 100K
RB107	1-234-397-11	s	NETWORK, RES (8 GANG) 100K
RB108	1-239-621-11	s	NETWORK RESISTOR 22 (1608)
RB109	1-239-621-11	s	NETWORK RESISTOR 22 (1608)
RB110	1-239-621-11	s	NETWORK RESISTOR 22 (1608)
RB111	1-239-621-11	s	NETWORK RESISTOR 22 (1608)
RB112	1-239-621-11	s	NETWORK RESISTOR 22 (1608)
RB113	1-234-397-11	s	NETWORK, RES (8 GANG) 100K
RB114	1-239-412-11	s	NETWORK, RESISTOR 100 (1608)
RB115	1-239-412-11	s	NETWORK, RESISTOR 100 (1608)
RB116	1-236-907-11	s	RESISTOR BLOCK 100K (1608)
RB117	1-234-397-11	s	NETWORK, RES (8 GANG) 100K
RB118	1-234-397-11	s	NETWORK, RES (8 GANG) 100K
RB119	1-234-397-11	s	NETWORK, RES (8 GANG) 100K
RB120	1-234-397-11	s	NETWORK, RES (8 GANG) 100K
RB121	1-239-412-11	s	NETWORK, RESISTOR 100 (1608)
RB122	1-239-412-11	s	NETWORK, RESISTOR 100 (1608)
RB123	1-234-397-11	s	NETWORK, RES (8 GANG) 100K
RB200	1-239-416-11	s	NETWORK,RESISTOR 220 (1608)
RB201	1-239-416-11	s	NETWORK,RESISTOR 220 (1608)
RB202	1-239-416-11	s	NETWORK,RESISTOR 220 (1608)
RB203	1-239-416-11	s	NETWORK,RESISTOR 220 (1608)
RB204	1-239-416-11	s	NETWORK,RESISTOR 220 (1608)
RB205	1-239-409-11	s	RESISTOR NETWORK 47 (1608)
RB206	1-239-409-11	s	RESISTOR NETWORK 47 (1608)
RB207	1-239-409-11	s	RESISTOR NETWORK 47 (1608)
RB208	1-239-409-11	s	RESISTOR NETWORK 47 (1608)
RB209	1-239-409-11	s	RESISTOR NETWORK 47 (1608)
RB210	1-239-409-11	s	RESISTOR NETWORK 47 (1608)
RB250	1-239-621-11	s	NETWORK RESISTOR 22 (1608)
RB251	1-239-621-11	s	NETWORK RESISTOR 22 (1608)
RB252	1-239-621-11	s	NETWORK RESISTOR 22 (1608)
RB253	1-239-621-11	s	NETWORK RESISTOR 22 (1608)
RB254	1-239-621-11	s	NETWORK RESISTOR 22 (1608)
RB400	1-239-409-11	s	RESISTOR NETWORK 47 (1608)

(DPR-155C BOARD [SUFFIX 14] for MSW-2000)

Ref. No. or Q'ty	Part No.	SP	Description
RB401	1-239-409-11	s	RESISTOR NETWORK 47 (1608)
RB402	1-239-409-11	s	RESISTOR NETWORK 47 (1608)
RB403	1-239-409-11	s	RESISTOR NETWORK 47 (1608)
RB404	1-239-409-11	s	RESISTOR NETWORK 47 (1608)
RB700	1-236-907-11	s	RESISTOR BLOCK 100K (1608)
RB701	1-236-907-11	s	RESISTOR BLOCK 100K (1608)
RB702	1-236-907-11	s	RESISTOR BLOCK 100K (1608)
RB703	1-236-907-11	s	RESISTOR BLOCK 100K (1608)
RB704	1-236-907-11	s	RESISTOR BLOCK 100K (1608)
RB705	1-236-907-11	s	RESISTOR BLOCK 100K (1608)
RB706	1-236-907-11	s	RESISTOR BLOCK 100K (1608)
RB707	1-236-907-11	s	RESISTOR BLOCK 100K (1608)
RB708	1-236-907-11	s	RESISTOR BLOCK 100K (1608)
RB709	1-234-397-11	s	NETWORK, RES (8 GANG) 100K
RB710	1-234-397-11	s	NETWORK, RES (8 GANG) 100K
RB711	1-234-397-11	s	NETWORK, RES (8 GANG) 100K
RB712	1-234-397-11	s	NETWORK, RES (8 GANG) 100K
RB800	1-236-907-11	s	RESISTOR BLOCK 100K (1608)
RB801	1-236-907-11	s	RESISTOR BLOCK 100K (1608)
RB804	1-239-416-11	s	NETWORK,RESISTOR 220 (1608)
RB805	1-239-416-11	s	NETWORK,RESISTOR 220 (1608)
RB806	1-239-416-11	s	NETWORK,RESISTOR 220 (1608)
RB807	1-239-430-11	s	NETWORK RESISTOR 4.7K (1608)
RB808	1-239-409-11	s	RESISTOR NETWORK 47 (1608)
RB809	1-239-409-11	s	RESISTOR NETWORK 47 (1608)
RB810	1-239-409-11	s	RESISTOR NETWORK 47 (1608)
RB811	1-239-409-11	s	RESISTOR NETWORK 47 (1608)
RB812	1-239-409-11	s	RESISTOR NETWORK 47 (1608)
RB813	1-236-907-11	s	RESISTOR BLOCK 100K (1608)
RB814	1-236-907-11	s	RESISTOR BLOCK 100K (1608)
RB815	1-236-907-11	s	RESISTOR BLOCK 100K (1608)
RB816	1-236-907-11	s	RESISTOR BLOCK 100K (1608)
RB817	1-239-430-11	s	NETWORK RESISTOR 4.7K (1608)
RB818	1-236-908-11	s	RESISTOR,NETWORK 10K (3216)
S800	1-692-270-41	s	SWITCH, SLIDE
X200	1-781-809-21	s	OSCILLATOR, CRYSTAL (SMD)

DPR-155H BOARD [SUFFIX 13] for HDW-2000/A2100

[Lot No. 261 - 351] HDW-2000/A2100

Ref. No. or Q'ty	Part No.	SP	Description
1pc	A-8327-125-B	s	MOUNTED CIRCUIT BOARD, DPR-155H
4pcs	3-191-747-01	o	SUPPORT (M3), HEXAGON
8pcs	7-682-545-04	s	SCREW +B3X4
1pc	3-179-084-11	s	LEVER (R), C BOARD
1pc	3-179-085-11	s	LEVER (L), C BOARD
C100	1-164-156-11	s	CAPACITOR,CERAMIC 0.1MF/25V F
C101	1-164-156-11	s	CAPACITOR,CERAMIC 0.1MF/25V F
C102	1-162-927-11	s	CAPACITOR,CERAMIC 100PF/50V CH
C103	1-126-394-11	s	CAPACITOR,ELECT 10MF/16V(CHIP)
C104	1-164-156-11	s	CAPACITOR,CERAMIC 0.1MF/25V F
C105	1-164-156-11	s	CAPACITOR,CERAMIC 0.1MF/25V F
C106	1-164-156-11	s	CAPACITOR,CERAMIC 0.1MF/25V F
C107	1-164-156-11	s	CAPACITOR,CERAMIC 0.1MF/25V F
C108	1-164-156-11	s	CAPACITOR,CERAMIC 0.1MF/25V F
C109	1-164-156-11	s	CAPACITOR,CERAMIC 0.1MF/25V F
C110	1-164-156-11	s	CAPACITOR,CERAMIC 0.1MF/25V F
C111	1-164-156-11	s	CAPACITOR,CERAMIC 0.1MF/25V F
C112	1-164-156-11	s	CAPACITOR,CERAMIC 0.1MF/25V F
C113	1-164-156-11	s	CAPACITOR,CERAMIC 0.1MF/25V F
C114	1-164-156-11	s	CAPACITOR,CERAMIC 0.1MF/25V F
C115	1-164-156-11	s	CAPACITOR,CERAMIC 0.1MF/25V F
C116	1-164-156-11	s	CAPACITOR,CERAMIC 0.1MF/25V F
C117	1-164-156-11	s	CAPACITOR,CERAMIC 0.1MF/25V F
C118	1-164-156-11	s	CAPACITOR,CERAMIC 0.1MF/25V F
C119	1-164-156-11	s	CAPACITOR,CERAMIC 0.1MF/25V F
C120	1-164-156-11	s	CAPACITOR,CERAMIC 0.1MF/25V F
C121	1-164-156-11	s	CAPACITOR,CERAMIC 0.1MF/25V F
C122	1-164-156-11	s	CAPACITOR,CERAMIC 0.1MF/25V F
C123	1-164-156-11	s	CAPACITOR,CERAMIC 0.1MF/25V F
C124	1-164-156-11	s	CAPACITOR,CERAMIC 0.1MF/25V F
C125	1-164-156-11	s	CAPACITOR,CERAMIC 0.1MF/25V F
C126	1-164-156-11	s	CAPACITOR,CERAMIC 0.1MF/25V F
C127	1-164-156-11	s	CAPACITOR,CERAMIC 0.1MF/25V F
C200	1-126-394-11	s	CAPACITOR,ELECT 10MF/16V(CHIP)
C201	1-164-156-11	s	CAPACITOR,CERAMIC 0.1MF/25V F
C202	1-164-156-11	s	CAPACITOR,CERAMIC 0.1MF/25V F
C203	1-164-156-11	s	CAPACITOR,CERAMIC 0.1MF/25V F
C204	1-164-156-11	s	CAPACITOR,CERAMIC 0.1MF/25V F
C205	1-126-394-11	s	CAPACITOR,ELECT 10MF/16V(CHIP)
C206	1-126-394-11	s	CAPACITOR,ELECT 10MF/16V(CHIP)
C207	1-164-156-11	s	CAPACITOR,CERAMIC 0.1MF/25V F
C232	1-126-394-11	s	CAPACITOR,ELECT 10MF/16V(CHIP)
C233	1-164-156-11	s	CAPACITOR,CERAMIC 0.1MF/25V F
C235	1-164-156-11	s	CAPACITOR,CERAMIC 0.1MF/25V F
C237	1-164-156-11	s	CAPACITOR,CERAMIC 0.1MF/25V F
C250	1-164-156-11	s	CAPACITOR,CERAMIC 0.1MF/25V F
C251	1-164-156-11	s	CAPACITOR,CERAMIC 0.1MF/25V F
C252	1-164-156-11	s	CAPACITOR,CERAMIC 0.1MF/25V F
C253	1-164-156-11	s	CAPACITOR,CERAMIC 0.1MF/25V F
C300	1-164-156-11	s	CAPACITOR,CERAMIC 0.1MF/25V F
C301	1-164-156-11	s	CAPACITOR,CERAMIC 0.1MF/25V F
C302	1-164-156-11	s	CAPACITOR,CERAMIC 0.1MF/25V F
C303	1-164-156-11	s	CAPACITOR,CERAMIC 0.1MF/25V F
C304	1-126-394-11	s	CAPACITOR,ELECT 10MF/16V(CHIP)
C315	1-164-156-11	s	CAPACITOR,CERAMIC 0.1MF/25V F
C316	1-164-156-11	s	CAPACITOR,CERAMIC 0.1MF/25V F
C331	1-126-394-11	s	CAPACITOR,ELECT 10MF/16V(CHIP)

(DPR-155H BOARD [SUFFIX 13] for HDW-2000/A2100)

Ref. No. or Q'ty	Part No.	SP	Description
C332	1-164-156-11	s	CAPACITOR,CERAMIC 0.1MF/25V F
C333	1-164-156-11	s	CAPACITOR,CERAMIC 0.1MF/25V F
C334	1-164-156-11	s	CAPACITOR,CERAMIC 0.1MF/25V F
C335	1-164-156-11	s	CAPACITOR,CERAMIC 0.1MF/25V F
C412	1-126-394-11	s	CAPACITOR,ELECT 10MF/16V(CHIP)
C413	1-164-156-11	s	CAPACITOR,CERAMIC 0.1MF/25V F
C440	1-164-156-11	s	CAPACITOR,CERAMIC 0.1MF/25V F
C700	1-164-156-11	s	CAPACITOR,CERAMIC 0.1MF/25V F
C701	1-113-503-11	s	CAPACITOR,CERAMIC 3900PF CH
C702	1-162-968-11	s	CAPACITOR,CERAMIC 4700PF/50V B
C703	1-164-156-11	s	CAPACITOR,CERAMIC 0.1MF/25V F
C704	1-164-156-11	s	CAPACITOR,CERAMIC 0.1MF/25V F
C705	1-164-156-11	s	CAPACITOR,CERAMIC 0.1MF/25V F
C706	1-164-156-11	s	CAPACITOR,CERAMIC 0.1MF/25V F
C707	1-164-156-11	s	CAPACITOR,CERAMIC 0.1MF/25V F
C708	1-164-156-11	s	CAPACITOR,CERAMIC 0.1MF/25V F
C709	1-164-156-11	s	CAPACITOR,CERAMIC 0.1MF/25V F
C710	1-164-156-11	s	CAPACITOR,CERAMIC 0.1MF/25V F
C711	1-164-156-11	s	CAPACITOR,CERAMIC 0.1MF/25V F
C712	1-164-156-11	s	CAPACITOR,CERAMIC 0.1MF/25V F
C713	1-113-503-11	s	CAPACITOR,CERAMIC 3900PF CH
C714	1-162-968-11	s	CAPACITOR,CERAMIC 4700PF/50V B
C715	1-164-156-11	s	CAPACITOR,CERAMIC 0.1MF/25V F
C716	1-164-156-11	s	CAPACITOR,CERAMIC 0.1MF/25V F
C717	1-164-156-11	s	CAPACITOR,CERAMIC 0.1MF/25V F
C718	1-164-156-11	s	CAPACITOR,CERAMIC 0.1MF/25V F
C719	1-164-156-11	s	CAPACITOR,CERAMIC 0.1MF/25V F
C720	1-164-156-11	s	CAPACITOR,CERAMIC 0.1MF/25V F
C721	1-164-156-11	s	CAPACITOR,CERAMIC 0.1MF/25V F
C722	1-164-156-11	s	CAPACITOR,CERAMIC 0.1MF/25V F
C723	1-164-156-11	s	CAPACITOR,CERAMIC 0.1MF/25V F
C724	1-164-156-11	s	CAPACITOR,CERAMIC 0.1MF/25V F
C810	1-164-156-11	s	CAPACITOR,CERAMIC 0.1MF/25V F
C811	1-164-156-11	s	CAPACITOR,CERAMIC 0.1MF/25V F
C812	1-126-392-11	s	CAPACITOR,CHIP ELECT100MF/6.3V
C813	1-126-392-11	s	CAPACITOR,CHIP ELECT100MF/6.3V
C814	1-164-156-11	s	CAPACITOR,CERAMIC 0.1MF/25V F
C815	1-164-156-11	s	CAPACITOR,CERAMIC 0.1MF/25V F
C816	1-164-156-11	s	CAPACITOR,CERAMIC 0.1MF/25V F
C817	1-164-156-11	s	CAPACITOR,CERAMIC 0.1MF/25V F
C818	1-164-156-11	s	CAPACITOR,CERAMIC 0.1MF/25V F
C819	1-126-392-11	s	CAPACITOR,CHIP ELECT100MF/6.3V
C820	1-126-392-11	s	CAPACITOR,CHIP ELECT100MF/6.3V
C821	1-126-392-11	s	CAPACITOR,CHIP ELECT100MF/6.3V
C822	1-126-392-11	s	CAPACITOR,CHIP ELECT100MF/6.3V
C823	1-164-156-11	s	CAPACITOR,CERAMIC 0.1MF/25V F
C827	1-164-156-11	s	CAPACITOR,CERAMIC 0.1MF/25V F
C829	1-164-156-11	s	CAPACITOR,CERAMIC 0.1MF/25V F
C831	1-164-156-11	s	CAPACITOR,CERAMIC 0.1MF/25V F
C832	1-164-156-11	s	CAPACITOR,CERAMIC 0.1MF/25V F
C837	1-164-156-11	s	CAPACITOR,CERAMIC 0.1MF/25V F
C838	1-164-156-11	s	CAPACITOR,CERAMIC 0.1MF/25V F
C839	1-126-394-11	s	CAPACITOR,ELECT 10MF/16V(CHIP)
C842	1-164-156-11	s	CAPACITOR,CERAMIC 0.1MF/25V F
C844	1-164-156-11	s	CAPACITOR,CERAMIC 0.1MF/25V F
C845	1-164-156-11	s	CAPACITOR,CERAMIC 0.1MF/25V F
C847	1-164-156-11	s	CAPACITOR,CERAMIC 0.1MF/25V F
C849	1-126-394-11	s	CAPACITOR,ELECT 10MF/16V(CHIP)
C850	1-164-156-11	s	CAPACITOR,CERAMIC 0.1MF/25V F

(DPR-155H BOARD [SUFFIX 13] for HDW-2000/A2100)

Ref. No. or Q'ty	Part No.	SP	Description
C851	1-164-156-11	s	CAPACITOR,CERAMIC 0.1MF/25V F
C852	1-164-156-11	s	CAPACITOR,CERAMIC 0.1MF/25V F
C853	1-126-394-11	s	CAPACITOR,ELECT 10MF/16V(CHIP)
C864	1-164-156-11	s	CAPACITOR,CERAMIC 0.1MF/25V F
F802	⚠ 1-576-270-11	s	FUSE CHIP 4A/125V (6125)
F803	⚠ 1-576-270-11	s	FUSE CHIP 4A/125V (6125)
FB200	1-469-094-11	s	FERRITE, EMI (SMD)
FL200	1-239-898-22	s	FILTER, EMI (SMD)
IC100	8-759-549-15	s	IC SN74LV245APWR
IC101	8-759-549-15	s	IC SN74LV245APWR
IC102	8-759-523-84	s	IC TC74VHC14FT (EL)
IC103	8-759-491-46	s	IC TC74VHCT04AFT (EL)
IC104	8-759-491-46	s	IC TC74VHCT04AFT (EL)
IC105	8-759-523-94	s	IC TC74VHC32FT(EL)
IC106	8-759-549-01	s	IC SN74LV125APWR
IC107	8-759-392-77	s	IC SN74LVC245APW (E20)
IC108	8-759-549-15	s	IC SN74LV245APWR
IC109	8-759-524-07	s	IC TC74VHC138FT(EL)
IC110	8-759-549-15	s	IC SN74LV245APWR
IC111	8-759-491-46	s	IC TC74VHCT04AFT (EL)
IC112	8-759-549-15	s	IC SN74LV245APWR
IC113	8-759-549-15	s	IC SN74LV245APWR
IC114	8-759-549-15	s	IC SN74LV245APWR
IC115	8-759-549-15	s	IC SN74LV245APWR
IC116	8-759-549-15	s	IC SN74LV245APWR
IC117	8-759-549-15	s	IC SN74LV245APWR
IC118	8-759-524-07	s	IC TC74VHC138FT(EL)
IC119	8-759-524-07	s	IC TC74VHC138FT(EL)
IC120	8-759-523-81	s	IC TC74VHC08FT(EL)
IC121	8-759-196-96	s	IC TC7SH08FU (TE85R)
IC122	8-759-523-92	s	IC TC74VHC21FT(EL)
IC123	8-759-549-15	s	IC SN74LV245APWR
IC124	8-752-392-03	s	IC CXD1095BR
IC125	8-759-196-96	s	IC TC7SH08FU (TE85R)
IC200	8-759-475-55	s	IC TC74LCX574FT(EL)
IC201	8-759-475-55	s	IC TC74LCX574FT(EL)
IC202	8-759-475-55	s	IC TC74LCX574FT(EL)
IC203	8-759-475-43	s	IC TC74LCX125FT(EL)
IC204	8-759-475-43	s	IC TC74LCX125FT(EL)
IC210	8-759-712-32	s	IC SN65LVDS389DBTR
IC212	8-759-712-32	s	IC SN65LVDS389DBTR
IC214	8-759-712-32	s	IC SN65LVDS389DBTR
IC216	8-759-271-86	s	IC TC7SH04FU
IC217	8-759-271-86	s	IC TC7SH04FU
IC250	8-759-392-77	s	IC SN74LVC245APW (E20)
IC251	8-759-392-77	s	IC SN74LVC245APW (E20)
IC252	8-759-392-77	s	IC SN74LVC245APW (E20)
IC253	8-759-475-43	s	IC TC74LCX125FT(EL)
IC302	8-759-524-10	s	IC TC74VHC157FT (EL)
IC303	8-759-524-10	s	IC TC74VHC157FT (EL)
IC413	8-759-639-86	s	IC SN65LVDS32DR
IC700	8-752-392-03	s	IC CXD1095BR
IC701	6-702-254-01	s	IC DSPB56362PV100-1J21D
IC702	8-759-543-83	s	IC KM416V1204CT-L6
IC703	8-759-543-83	s	IC KM416V1204CT-L6
IC704	6-702-254-01	s	IC DSPB56362PV100-1J21D
IC705	8-759-543-83	s	IC KM416V1204CT-L6

(DPR-155H BOARD [SUFFIX 13] for HDW-2000/A2100)

Ref. No. or Q'ty	Part No.	SP	Description
IC706	8-759-543-83	s	IC KM416V1204CT-L6
IC801	8-759-549-15	s	IC SN74LV245APWR
IC802	8-759-196-96	s	IC TC7SH08FU (TE85R)
IC803	8-759-491-46	s	IC TC74VHCT04AFT (EL)
IC804	8-759-475-43	s	IC TC74LCX125FT(EL)
IC805	8-759-475-43	s	IC TC74LCX125FT(EL)
IC808	8-759-549-15	s	IC SN74LV245APWR
IC809	8-759-523-78	s	IC TC74VHC00FT(EL)
IC810	8-759-392-77	s	IC SN74LVC245APW (E20)
IC812	8-759-475-43	s	IC TC74LCX125FT(EL)
IC817	8-759-549-01	s	IC SN74LV125APWR
IC818	8-759-549-15	s	IC SN74LV245APWR
IC819	8-759-524-10	s	IC TC74VHC157FT (EL)
IC822	8-759-549-01	s	IC SN74LV125APWR
IC823	8-759-549-15	s	IC SN74LV245APWR
IC825	8-759-549-15	s	IC SN74LV245APWR
IC829	8-759-524-10	s	IC TC74VHC157FT (EL)
IC831	8-759-524-27	s	IC TC74VHC244FT(EL)
L100	1-412-056-11	s	INDUCTOR 4.7UH (3225)
L101	1-412-056-11	s	INDUCTOR 4.7UH (3225)
L102	1-412-056-11	s	INDUCTOR 4.7UH (3225)
L103	1-412-056-11	s	INDUCTOR 4.7UH (3225)
L200	1-412-056-11	s	INDUCTOR 4.7UH (3225)
L201	1-412-056-11	s	INDUCTOR 4.7UH (3225)
L204	1-412-056-11	s	INDUCTOR 4.7UH (3225)
L402	1-412-056-11	s	INDUCTOR 4.7UH (3225)
L800	1-406-864-21	s	COIL,CHOKE 4.7UH
L801	1-406-864-21	s	COIL,CHOKE 4.7UH
L802	1-406-864-21	s	COIL,CHOKE 4.7UH
L803	1-406-864-21	s	COIL,CHOKE 4.7UH
L804	1-412-056-11	s	INDUCTOR 4.7UH (3225)
L806	1-412-056-11	s	INDUCTOR 4.7UH (3225)
L808	1-412-056-11	s	INDUCTOR 4.7UH (3225)
Q200	8-729-029-14	s	TRANSISTOR DTC144EUA-T106
Q800	8-729-029-14	s	TRANSISTOR DTC144EUA-T106
R100	1-218-740-11	s	RESISTOR,CHIP 100K 1/16W(1608)
R101	1-218-740-11	s	RESISTOR,CHIP 100K 1/16W(1608)
R102	1-218-740-11	s	RESISTOR,CHIP 100K 1/16W(1608)
R103	1-218-740-11	s	RESISTOR,CHIP 100K 1/16W(1608)
R105	1-218-740-11	s	RESISTOR,CHIP 100K 1/16W(1608)
R106	1-218-660-91	s	RESISTOR,CHIP 47 1/16W (1608)
R107	1-218-660-91	s	RESISTOR,CHIP 47 1/16W (1608)
R108	1-218-660-91	s	RESISTOR,CHIP 47 1/16W (1608)
R109	1-218-660-91	s	RESISTOR,CHIP 47 1/16W (1608)
R110	1-218-740-11	s	RESISTOR,CHIP 100K 1/16W(1608)
R111	1-218-668-11	s	RESISTOR,CHIP 100 1/16W (1608)
R113	1-218-740-11	s	RESISTOR,CHIP 100K 1/16W(1608)
R114	1-218-740-11	s	RESISTOR,CHIP 100K 1/16W(1608)
R115	1-218-740-11	s	RESISTOR,CHIP 100K 1/16W(1608)
R116	1-218-740-11	s	RESISTOR,CHIP 100K 1/16W(1608)
R117	1-218-708-11	s	RESISTOR,CHIP 4.7K 1/16W(1608)
R118	1-218-708-11	s	RESISTOR,CHIP 4.7K 1/16W(1608)
R122	1-218-708-11	s	RESISTOR,CHIP 4.7K 1/16W(1608)
R130	1-216-864-11	s	CONDUCTOR, CHIP (1608)
R131	1-216-864-11	s	CONDUCTOR, CHIP (1608)
R132	1-216-864-11	s	CONDUCTOR, CHIP (1608)
R133	1-216-864-11	s	CONDUCTOR, CHIP (1608)
R135	1-218-708-11	s	RESISTOR,CHIP 4.7K 1/16W(1608)

(DPR-155H BOARD [SUFFIX 13] for HDW-2000/A2100)

Ref. No. or Q'ty	Part No.	SP	Description
R136	1-218-652-11	s	RESISTOR,CHIP 22 1/16W (1608)
R138	1-218-740-11	s	RESISTOR,CHIP 100K 1/16W(1608)
R139	1-218-740-11	s	RESISTOR,CHIP 100K 1/16W(1608)
R141	1-216-864-11	s	CONDUCTOR, CHIP (1608)
R200	1-218-676-11	s	RESISTOR,CHIP 220 1/16W(1608)
R205	1-218-652-11	s	RESISTOR,CHIP 22 1/16W (1608)
R220	1-218-660-91	s	RESISTOR,CHIP 47 1/16W (1608)
R222	1-216-864-11	s	CONDUCTOR, CHIP (1608)
R223	1-216-864-11	s	CONDUCTOR, CHIP (1608)
R232	1-218-716-11	s	RESISTOR,CHIP 10K 1/16W(1608)
R250	1-218-652-11	s	RESISTOR,CHIP 22 1/16W (1608)
R251	1-218-652-11	s	RESISTOR,CHIP 22 1/16W (1608)
R252	1-218-652-11	s	RESISTOR,CHIP 22 1/16W (1608)
R253	1-218-652-11	s	RESISTOR,CHIP 22 1/16W (1608)
R254	1-218-652-11	s	RESISTOR,CHIP 22 1/16W (1608)
R255	1-218-652-11	s	RESISTOR,CHIP 22 1/16W (1608)
R256	1-218-652-11	s	RESISTOR,CHIP 22 1/16W (1608)
R257	1-218-740-11	s	RESISTOR,CHIP 100K 1/16W(1608)
R300	1-216-864-11	s	CONDUCTOR, CHIP (1608)
R301	1-216-864-11	s	CONDUCTOR, CHIP (1608)
R302	1-216-864-11	s	CONDUCTOR, CHIP (1608)
R303	1-218-708-11	s	RESISTOR,CHIP 4.7K 1/16W(1608)
R304	1-218-708-11	s	RESISTOR,CHIP 4.7K 1/16W(1608)
R305	1-218-708-11	s	RESISTOR,CHIP 4.7K 1/16W(1608)
R306	1-218-740-11	s	RESISTOR,CHIP 100K 1/16W(1608)
R307	1-218-708-11	s	RESISTOR,CHIP 4.7K 1/16W(1608)
R349	1-216-864-11	s	CONDUCTOR, CHIP (1608)
R351	1-218-652-11	s	RESISTOR,CHIP 22 1/16W (1608)
R352	1-218-652-11	s	RESISTOR,CHIP 22 1/16W (1608)
R353	1-218-708-11	s	RESISTOR,CHIP 4.7K 1/16W(1608)
R354	1-218-680-11	s	RESISTOR,CHIP 330 1/16W(1608)
R355	1-218-708-11	s	RESISTOR,CHIP 4.7K 1/16W(1608)
R357	1-218-740-11	s	RESISTOR,CHIP 100K 1/16W(1608)
R358	1-218-740-11	s	RESISTOR,CHIP 100K 1/16W(1608)
R359	1-218-652-11	s	RESISTOR,CHIP 22 1/16W (1608)
R428	1-218-668-11	s	RESISTOR,CHIP 100 1/16W (1608)
R429	1-218-668-11	s	RESISTOR,CHIP 100 1/16W (1608)
R430	1-218-668-11	s	RESISTOR,CHIP 100 1/16W (1608)
R431	1-218-668-11	s	RESISTOR,CHIP 100 1/16W (1608)
R432	1-218-652-11	s	RESISTOR,CHIP 22 1/16W (1608)
R433	1-218-652-11	s	RESISTOR,CHIP 22 1/16W (1608)
R434	1-218-652-11	s	RESISTOR,CHIP 22 1/16W (1608)
R441	1-216-864-11	s	CONDUCTOR, CHIP (1608)
R618	1-216-864-11	s	CONDUCTOR, CHIP (1608)
R715	1-216-864-11	s	CONDUCTOR, CHIP (1608)
R716	1-216-864-11	s	CONDUCTOR, CHIP (1608)
R717	1-216-864-11	s	CONDUCTOR, CHIP (1608)
R718	1-216-864-11	s	CONDUCTOR, CHIP (1608)
R719	1-216-864-11	s	CONDUCTOR, CHIP (1608)
R720	1-216-864-11	s	CONDUCTOR, CHIP (1608)
R722	1-216-864-11	s	CONDUCTOR, CHIP (1608)
R723	1-216-864-11	s	CONDUCTOR, CHIP (1608)
R724	1-216-864-11	s	CONDUCTOR, CHIP (1608)
R725	1-216-864-11	s	CONDUCTOR, CHIP (1608)
R726	1-216-864-11	s	CONDUCTOR, CHIP (1608)
R727	1-216-864-11	s	CONDUCTOR, CHIP (1608)
R728	1-216-864-11	s	CONDUCTOR, CHIP (1608)
R729	1-216-864-11	s	CONDUCTOR, CHIP (1608)
R738	1-218-692-11	s	RESISTOR,CHIP 1.0K 1/16W(1608)

(DPR-155H BOARD [SUFFIX 13] for HDW-2000/A2100)

Ref. No. or Q'ty	Part No.	SP	Description
R739	1-218-692-11	s	RESISTOR,CHIP 1.0K 1/16W(1608)
R740	1-218-692-11	s	RESISTOR,CHIP 1.0K 1/16W(1608)
R748	1-216-864-11	s	CONDUCTOR, CHIP (1608)
R749	1-216-864-11	s	CONDUCTOR, CHIP (1608)
R750	1-216-864-11	s	CONDUCTOR, CHIP (1608)
R751	1-216-864-11	s	CONDUCTOR, CHIP (1608)
R752	1-216-864-11	s	CONDUCTOR, CHIP (1608)
R753	1-216-864-11	s	CONDUCTOR, CHIP (1608)
R755	1-216-864-11	s	CONDUCTOR, CHIP (1608)
R756	1-216-864-11	s	CONDUCTOR, CHIP (1608)
R757	1-216-864-11	s	CONDUCTOR, CHIP (1608)
R758	1-216-864-11	s	CONDUCTOR, CHIP (1608)
R759	1-216-864-11	s	CONDUCTOR, CHIP (1608)
R760	1-216-864-11	s	CONDUCTOR, CHIP (1608)
R761	1-216-864-11	s	CONDUCTOR, CHIP (1608)
R762	1-216-864-11	s	CONDUCTOR, CHIP (1608)
R771	1-218-692-11	s	RESISTOR,CHIP 1.0K 1/16W(1608)
R772	1-218-692-11	s	RESISTOR,CHIP 1.0K 1/16W(1608)
R773	1-218-692-11	s	RESISTOR,CHIP 1.0K 1/16W(1608)
R796	1-216-864-11	s	CONDUCTOR, CHIP (1608)
R797	1-216-864-11	s	CONDUCTOR, CHIP (1608)
R811	1-216-864-11	s	CONDUCTOR, CHIP (1608)
R813	1-218-676-11	s	RESISTOR,CHIP 220 1/16W(1608)
R814	1-218-676-11	s	RESISTOR,CHIP 220 1/16W(1608)
R815	1-218-676-11	s	RESISTOR,CHIP 220 1/16W(1608)
R820	1-218-652-11	s	RESISTOR,CHIP 22 1/16W (1608)
R831	1-218-652-11	s	RESISTOR,CHIP 22 1/16W (1608)
R834	1-218-740-11	s	RESISTOR,CHIP 100K 1/16W(1608)
R835	1-218-740-11	s	RESISTOR,CHIP 100K 1/16W(1608)
R839	1-216-864-11	s	CONDUCTOR, CHIP (1608)
R841	1-218-652-11	s	RESISTOR,CHIP 22 1/16W (1608)
R851	1-216-864-11	s	CONDUCTOR, CHIP (1608)
R852	1-216-864-11	s	CONDUCTOR, CHIP (1608)
R854	1-218-652-11	s	RESISTOR,CHIP 22 1/16W (1608)
R856	1-218-652-11	s	RESISTOR,CHIP 22 1/16W (1608)
R863	1-218-716-11	s	RESISTOR,CHIP 10K 1/16W(1608)
R1037	1-216-864-11	s	CONDUCTOR, CHIP (1608)
R1038	1-216-864-11	s	CONDUCTOR, CHIP (1608)
R1039	1-216-864-11	s	CONDUCTOR, CHIP (1608)
R1040	1-216-864-11	s	CONDUCTOR, CHIP (1608)
R1052	1-218-740-11	s	RESISTOR,CHIP 100K 1/16W(1608)
R1053	1-218-740-11	s	RESISTOR,CHIP 100K 1/16W(1608)
R1054	1-216-864-11	s	CONDUCTOR, CHIP (1608)
RB100	1-236-907-11	s	RESISTOR BLOCK 100K (1608)
RB101	1-236-907-11	s	RESISTOR BLOCK 100K (1608)
RB102	1-239-409-11	s	RESISTOR NETWORK 47 (1608)
RB103	1-239-409-11	s	RESISTOR NETWORK 47 (1608)
RB104	1-236-907-11	s	RESISTOR BLOCK 100K (1608)
RB106	1-234-397-11	s	NETWORK, RES (8 GANG) 100K
RB107	1-234-397-11	s	NETWORK, RES (8 GANG) 100K
RB108	1-239-621-11	s	NETWORK RESISTOR 22 (1608)
RB109	1-239-621-11	s	NETWORK RESISTOR 22 (1608)
RB110	1-239-621-11	s	NETWORK RESISTOR 22 (1608)
RB111	1-239-621-11	s	NETWORK RESISTOR 22 (1608)
RB112	1-239-621-11	s	NETWORK RESISTOR 22 (1608)
RB113	1-234-397-11	s	NETWORK, RES (8 GANG) 100K
RB114	1-239-412-11	s	NETWORK, RESISTOR 100 (1608)
RB115	1-239-412-11	s	NETWORK, RESISTOR 100 (1608)

(DPR-155H BOARD [SUFFIX 13] for HDW-2000/A2100)

Ref. No. or Q'ty	Part No.	SP	Description
RB116	1-236-907-11	s	RESISTOR BLOCK 100K (1608)
RB117	1-234-397-11	s	NETWORK, RES (8 GANG) 100K
RB118	1-234-397-11	s	NETWORK, RES (8 GANG) 100K
RB119	1-234-397-11	s	NETWORK, RES (8 GANG) 100K
RB120	1-234-397-11	s	NETWORK, RES (8 GANG) 100K
RB121	1-239-412-11	s	NETWORK, RESISTOR 100 (1608)
RB122	1-239-412-11	s	NETWORK, RESISTOR 100 (1608)
RB123	1-234-397-11	s	NETWORK, RES (8 GANG) 100K
RB200	1-239-416-11	s	NETWORK,RESISTOR 220 (1608)
RB201	1-239-416-11	s	NETWORK,RESISTOR 220 (1608)
RB202	1-239-416-11	s	NETWORK,RESISTOR 220 (1608)
RB203	1-239-416-11	s	NETWORK,RESISTOR 220 (1608)
RB204	1-239-416-11	s	NETWORK,RESISTOR 220 (1608)
RB205	1-239-409-11	s	RESISTOR NETWORK 47 (1608)
RB206	1-239-409-11	s	RESISTOR NETWORK 47 (1608)
RB207	1-239-409-11	s	RESISTOR NETWORK 47 (1608)
RB208	1-239-409-11	s	RESISTOR NETWORK 47 (1608)
RB209	1-239-409-11	s	RESISTOR NETWORK 47 (1608)
RB210	1-239-409-11	s	RESISTOR NETWORK 47 (1608)
RB250	1-239-621-11	s	NETWORK RESISTOR 22 (1608)
RB251	1-239-621-11	s	NETWORK RESISTOR 22 (1608)
RB252	1-239-621-11	s	NETWORK RESISTOR 22 (1608)
RB253	1-239-621-11	s	NETWORK RESISTOR 22 (1608)
RB254	1-239-621-11	s	NETWORK RESISTOR 22 (1608)
RB300	1-236-907-11	s	RESISTOR BLOCK 100K (1608)
RB700	1-236-907-11	s	RESISTOR BLOCK 100K (1608)
RB701	1-236-907-11	s	RESISTOR BLOCK 100K (1608)
RB702	1-236-907-11	s	RESISTOR BLOCK 100K (1608)
RB703	1-236-907-11	s	RESISTOR BLOCK 100K (1608)
RB704	1-236-907-11	s	RESISTOR BLOCK 100K (1608)
RB705	1-236-907-11	s	RESISTOR BLOCK 100K (1608)
RB706	1-236-907-11	s	RESISTOR BLOCK 100K (1608)
RB707	1-236-907-11	s	RESISTOR BLOCK 100K (1608)
RB708	1-236-907-11	s	RESISTOR BLOCK 100K (1608)
RB709	1-234-397-11	s	NETWORK, RES (8 GANG) 100K
RB710	1-234-397-11	s	NETWORK, RES (8 GANG) 100K
RB801	1-236-907-11	s	RESISTOR BLOCK 100K (1608)
RB804	1-239-416-11	s	NETWORK,RESISTOR 220 (1608)
RB805	1-239-416-11	s	NETWORK,RESISTOR 220 (1608)
RB806	1-239-416-11	s	NETWORK,RESISTOR 220 (1608)
RB807	1-239-430-11	s	NETWORK RESISTOR 4.7K (1608)
RB811	1-239-409-11	s	RESISTOR NETWORK 47 (1608)
RB812	1-239-409-11	s	RESISTOR NETWORK 47 (1608)
RB813	1-236-907-11	s	RESISTOR BLOCK 100K (1608)
RB814	1-236-907-11	s	RESISTOR BLOCK 100K (1608)
RB815	1-236-907-11	s	RESISTOR BLOCK 100K (1608)
RB816	1-236-907-11	s	RESISTOR BLOCK 100K (1608)
RB817	1-239-430-11	s	NETWORK RESISTOR 4.7K (1608)
RB818	1-236-908-11	s	RESISTOR,NETWORK 10K (3216)
RB819	1-236-907-11	s	RESISTOR BLOCK 100K (1608)
X200	1-781-809-21	s	OSCILLATOR, CRYSTAL (SMD)

DPR-194 BOARD

[Lot No. 261 - 554] [SUFFIX 11] MSW-2000

Ref. No. or Q'ty	Part No.	SP	Description
1pc	A-8345-223-A	s	MOUNTED CIRCUIT BOARD, DPR-194
C100	1-164-156-11	s	CAPACITOR,CERAMIC 0.1MF/25V F
C101	1-164-156-11	s	CAPACITOR,CERAMIC 0.1MF/25V F
C102	1-164-156-11	s	CAPACITOR,CERAMIC 0.1MF/25V F
C103	1-104-851-11	s	CAPACITOR,TANTALUM 10MF/10V
C104	1-104-851-11	s	CAPACITOR,TANTALUM 10MF/10V
C105	1-164-156-11	s	CAPACITOR,CERAMIC 0.1MF/25V F
C106	1-164-156-11	s	CAPACITOR,CERAMIC 0.1MF/25V F
C107	1-164-156-11	s	CAPACITOR,CERAMIC 0.1MF/25V F
C108	1-164-156-11	s	CAPACITOR,CERAMIC 0.1MF/25V F
C109	1-164-156-11	s	CAPACITOR,CERAMIC 0.1MF/25V F
C110	1-164-156-11	s	CAPACITOR,CERAMIC 0.1MF/25V F
C111	1-164-156-11	s	CAPACITOR,CERAMIC 0.1MF/25V F
C112	1-164-156-11	s	CAPACITOR,CERAMIC 0.1MF/25V F
C113	1-164-156-11	s	CAPACITOR,CERAMIC 0.1MF/25V F
C114	1-164-156-11	s	CAPACITOR,CERAMIC 0.1MF/25V F
C115	1-164-156-11	s	CAPACITOR,CERAMIC 0.1MF/25V F
C116	1-164-156-11	s	CAPACITOR,CERAMIC 0.1MF/25V F
C117	1-164-156-11	s	CAPACITOR,CERAMIC 0.1MF/25V F
C118	1-164-156-11	s	CAPACITOR,CERAMIC 0.1MF/25V F
C119	1-164-156-11	s	CAPACITOR,CERAMIC 0.1MF/25V F
C120	1-164-156-11	s	CAPACITOR,CERAMIC 0.1MF/25V F
C121	1-164-156-11	s	CAPACITOR,CERAMIC 0.1MF/25V F
C122	1-164-156-11	s	CAPACITOR,CERAMIC 0.1MF/25V F
C123	1-126-392-11	s	CAPACITOR,CHIP ELECT100MF/6.3V
C124	1-126-392-11	s	CAPACITOR,CHIP ELECT100MF/6.3V
C127	1-164-156-11	s	CAPACITOR,CERAMIC 0.1MF/25V F
C128	1-164-156-11	s	CAPACITOR,CERAMIC 0.1MF/25V F
C129	1-164-156-11	s	CAPACITOR,CERAMIC 0.1MF/25V F
C130	1-164-156-11	s	CAPACITOR,CERAMIC 0.1MF/25V F
C131	1-164-156-11	s	CAPACITOR,CERAMIC 0.1MF/25V F
C132	1-164-156-11	s	CAPACITOR,CERAMIC 0.1MF/25V F
CN2	1-580-789-21	o	PIN,CONNECTOR (SMD) 6P
IC100	8-759-640-95	o	IC CXD9097AR
IC101	8-759-392-77	s	IC SN74LVC245APW (E20)
IC102	8-759-392-77	s	IC SN74LVC245APW (E20)
IC103	8-759-392-77	s	IC SN74LVC245APW (E20)
IC104	6-702-238-11	s	IC HY57V643220CT-7TR
IC106	8-759-524-27	s	IC TC74VHC244FT(EL)
IC107	8-759-271-86	s	IC TC7SH04FU
IC108	6-802-191-01	s	IC XC18V02-DPR155-V2.00
Q100	8-729-029-14	s	TRANSISTOR DTC144EUA-T106
R100	1-216-864-11	s	RESISTOR,CHIP 0 1/16W (1608)
R101	1-218-716-11	s	RESISTOR,CHIP 10K 1/16W(1608)
R102	1-216-864-11	s	RESISTOR,CHIP 0 1/16W (1608)
R105	1-216-864-11	s	RESISTOR,CHIP 0 1/16W (1608)
R106	1-216-864-11	s	RESISTOR,CHIP 0 1/16W (1608)
R108	1-216-864-11	s	RESISTOR,CHIP 0 1/16W (1608)
R111	1-218-652-11	s	RESISTOR,CHIP 22 1/16W (1608)
R112	1-218-708-11	s	RESISTOR,CHIP 4.7K 1/16W(1608)
R113	1-218-716-11	s	RESISTOR,CHIP 10K 1/16W(1608)
RB100	1-239-621-11	s	NETWORK RESISTOR 22 (1608)
RB101	1-239-621-11	s	NETWORK RESISTOR 22 (1608)
RB102	1-239-711-11	s	NETWORK, RESISTOR 0 (1608)

(DPR-194 BOARD)

Ref. No. or Q'ty	Part No.	SP	Description
RB103	1-239-711-11	s	NETWORK, RESISTOR 0 (1608)
RB104	1-239-711-11	s	NETWORK, RESISTOR 0 (1608)
RB105	1-239-711-11	s	NETWORK, RESISTOR 0 (1608)
RB106	1-239-711-11	s	NETWORK, RESISTOR 0 (1608)
RB107	1-239-711-11	s	NETWORK, RESISTOR 0 (1608)
RB108	1-236-908-11	s	RESISTOR,NETWORK 10K (3216)
RB109	1-239-430-11	s	NETWORK RESISTOR 4.7K (1608)

DPR-195H BOARD

[Lot No. 261 - 351] [SUFFIX 11] HDW-2000, M2000/P, M2100/P, A2100

Ref. No. or Q'ty	Part No.	SP	Description
1pc	A-8345-221-A	s	MOUNTED CIRCUIT BOARD, DPR-195H
C100	1-164-156-11	s	CAPACITOR,CERAMIC 0.1MF/25V F
C101	1-164-156-11	s	CAPACITOR,CERAMIC 0.1MF/25V F
C102	1-164-156-11	s	CAPACITOR,CERAMIC 0.1MF/25V F
C103	1-104-851-11	s	CAPACITOR,TANTALUM 10MF/10V
C104	1-104-851-11	s	CAPACITOR,TANTALUM 10MF/10V
C105	1-164-156-11	s	CAPACITOR,CERAMIC 0.1MF/25V F
C106	1-164-156-11	s	CAPACITOR,CERAMIC 0.1MF/25V F
C107	1-164-156-11	s	CAPACITOR,CERAMIC 0.1MF/25V F
C108	1-164-156-11	s	CAPACITOR,CERAMIC 0.1MF/25V F
C109	1-164-156-11	s	CAPACITOR,CERAMIC 0.1MF/25V F
C110	1-164-156-11	s	CAPACITOR,CERAMIC 0.1MF/25V F
C111	1-164-156-11	s	CAPACITOR,CERAMIC 0.1MF/25V F
C112	1-164-156-11	s	CAPACITOR,CERAMIC 0.1MF/25V F
C113	1-164-156-11	s	CAPACITOR,CERAMIC 0.1MF/25V F
C114	1-164-156-11	s	CAPACITOR,CERAMIC 0.1MF/25V F
C115	1-164-156-11	s	CAPACITOR,CERAMIC 0.1MF/25V F
C116	1-164-156-11	s	CAPACITOR,CERAMIC 0.1MF/25V F
C117	1-164-156-11	s	CAPACITOR,CERAMIC 0.1MF/25V F
C118	1-164-156-11	s	CAPACITOR,CERAMIC 0.1MF/25V F
C119	1-164-156-11	s	CAPACITOR,CERAMIC 0.1MF/25V F
C120	1-164-156-11	s	CAPACITOR,CERAMIC 0.1MF/25V F
C121	1-164-156-11	s	CAPACITOR,CERAMIC 0.1MF/25V F
C122	1-164-156-11	s	CAPACITOR,CERAMIC 0.1MF/25V F
C123	1-126-392-11	s	CAPACITOR,CHIP ELECT100MF/6.3V
C124	1-126-392-11	s	CAPACITOR,CHIP ELECT100MF/6.3V
C125	1-126-394-11	s	CAPACITOR,ELECT 10MF/16V(CHIP)
C126	1-164-156-11	s	CAPACITOR,CERAMIC 0.1MF/25V F
C127	1-164-156-11	s	CAPACITOR,CERAMIC 0.1MF/25V F
C128	1-164-156-11	s	CAPACITOR,CERAMIC 0.1MF/25V F
C129	1-164-156-11	s	CAPACITOR,CERAMIC 0.1MF/25V F
CN1	1-794-413-11	s	CONNECTOR, BOARD TO BOARD 140P
CN2	1-580-789-21	o	PIN,CONNECTOR (SMD) 6P
IC101	8-759-392-77	s	IC SN74LVC245APW (E20)
IC102	8-759-392-77	s	IC SN74LVC245APW (E20)
IC103	8-759-392-77	s	IC SN74LVC245APW (E20)
IC104	6-702-238-11	s	IC HY57V643220CT-7TR
IC105	8-759-696-35	s	IC TPS7101QDR
IC106	8-759-524-27	s	IC TC74VHC244FT(EL)
IC107	8-759-271-86	s	IC TC7SH04FU
IC108	6-802-189-02	s	IC XC18V02-DPR195H/208-V3.03
Q100	8-729-029-14	s	TRANSISTOR DTC144EUA-T106
R100	1-216-864-11	s	CONDUCTOR, CHIP (1608)
R101	1-218-716-11	s	RESISTOR,CHIP 10K 1/16W(1608)
R102	1-216-864-11	s	CONDUCTOR, CHIP (1608)
R103	1-216-864-11	s	CONDUCTOR, CHIP (1608)
R105	1-216-864-11	s	CONDUCTOR, CHIP (1608)
R106	1-216-864-11	s	CONDUCTOR, CHIP (1608)
R108	1-216-864-11	s	CONDUCTOR, CHIP (1608)
R109	1-216-864-11	s	CONDUCTOR, CHIP (1608)
R110	1-216-864-11	s	CONDUCTOR, CHIP (1608)
R111	1-218-652-11	s	RESISTOR,CHIP 22 1/16W (1608)
R112	1-218-708-11	s	RESISTOR,CHIP 4.7K 1/16W(1608)
R113	1-218-716-11	s	RESISTOR,CHIP 10K 1/16W(1608)
R114	1-218-748-11	s	RESISTOR,CHIP 220K 1/16W(1608)

(DPR-195H BOARD)

Ref. No. or Q'ty	Part No.	SP	Description
R117	1-218-740-11	s	RESISTOR,CHIP 100K 1/16W(1608)
RB100	1-239-621-11	s	NETWORK RESISTOR 22 (1608)
RB101	1-239-621-11	s	NETWORK RESISTOR 22 (1608)
RB102	1-239-711-11	s	NETWORK, RESISTOR 0 (1608)
RB103	1-239-711-11	s	NETWORK, RESISTOR 0 (1608)
RB104	1-239-711-11	s	NETWORK, RESISTOR 0 (1608)
RB105	1-239-711-11	s	NETWORK, RESISTOR 0 (1608)
RB106	1-239-711-11	s	NETWORK, RESISTOR 0 (1608)
RB107	1-239-711-11	s	NETWORK, RESISTOR 0 (1608)
RB108	1-236-908-11	s	RESISTOR,NETWORK 10K (3216)
RB109	1-239-430-11	s	NETWORK RESISTOR 4.7K (1608)

DPR-208 BOARD

[Lot No. 261 - 351] [SUFFIX 11] MSW-2000, M2000/P, A2000/P, M2100/P

Ref. No. or Q'ty	Part No.	SP	Description
1pc	A-8329-567-A	s	MOUNTED CIRCUIT BOARD, DPR-208
C100	1-164-156-11	s	CAPACITOR,CERAMIC 0.1MF/25V F
C101	1-164-156-11	s	CAPACITOR,CERAMIC 0.1MF/25V F
C102	1-164-156-11	s	CAPACITOR,CERAMIC 0.1MF/25V F
C103	1-104-851-11	s	CAPACITOR,TANTALUM 10MF/10V
C104	1-104-851-11	s	CAPACITOR,TANTALUM 10MF/10V
C105	1-164-156-11	s	CAPACITOR,CERAMIC 0.1MF/25V F
C106	1-164-156-11	s	CAPACITOR,CERAMIC 0.1MF/25V F
C107	1-164-156-11	s	CAPACITOR,CERAMIC 0.1MF/25V F
C108	1-164-156-11	s	CAPACITOR,CERAMIC 0.1MF/25V F
C109	1-164-156-11	s	CAPACITOR,CERAMIC 0.1MF/25V F
C110	1-164-156-11	s	CAPACITOR,CERAMIC 0.1MF/25V F
C111	1-164-156-11	s	CAPACITOR,CERAMIC 0.1MF/25V F
C112	1-164-156-11	s	CAPACITOR,CERAMIC 0.1MF/25V F
C113	1-164-156-11	s	CAPACITOR,CERAMIC 0.1MF/25V F
C114	1-164-156-11	s	CAPACITOR,CERAMIC 0.1MF/25V F
C115	1-164-156-11	s	CAPACITOR,CERAMIC 0.1MF/25V F
C116	1-164-156-11	s	CAPACITOR,CERAMIC 0.1MF/25V F
C117	1-164-156-11	s	CAPACITOR,CERAMIC 0.1MF/25V F
C118	1-164-156-11	s	CAPACITOR,CERAMIC 0.1MF/25V F
C119	1-164-156-11	s	CAPACITOR,CERAMIC 0.1MF/25V F
C120	1-164-156-11	s	CAPACITOR,CERAMIC 0.1MF/25V F
C121	1-164-156-11	s	CAPACITOR,CERAMIC 0.1MF/25V F
C122	1-164-156-11	s	CAPACITOR,CERAMIC 0.1MF/25V F
C123	1-126-392-11	s	CAPACITOR,CHIP ELECT100MF/6.3V
C124	1-126-392-11	s	CAPACITOR,CHIP ELECT100MF/6.3V
C125	1-126-394-11	s	CAPACITOR,ELECT 10MF/16V(CHIP)
C126	1-164-156-11	s	CAPACITOR,CERAMIC 0.1MF/25V F
C127	1-164-156-11	s	CAPACITOR,CERAMIC 0.1MF/25V F
C128	1-164-156-11	s	CAPACITOR,CERAMIC 0.1MF/25V F
C129	1-164-156-11	s	CAPACITOR,CERAMIC 0.1MF/25V F
C130	1-162-921-11	s	CAPACITOR,CERAMIC 33PF/50V CH
CN2	1-580-789-21	o	PIN,CONNECTOR (SMD) 6P
IC101	8-759-392-77	s	IC SN74LVC245APW (E20)
IC102	8-759-392-77	s	IC SN74LVC245APW (E20)
IC103	8-759-392-77	s	IC SN74LVC245APW (E20)
IC104	6-702-238-11	s	IC HY57V643220CT-7TR
IC105	8-759-696-35	s	IC TPS7101QDR
IC106	8-759-524-27	s	IC TC74VHC244FT(EL)
IC107	8-759-271-86	s	IC TC7SH04FU
IC108	6-802-189-02	s	IC XC18V02-DPR195H/208-V3.03
Q100	8-729-029-14	s	TRANSISTOR DTC144EUA-T106
R100	1-216-864-11	s	CONDUCTOR, CHIP (1608)
R101	1-218-716-11	s	RESISTOR,CHIP 10K 1/16W(1608)
R102	1-216-864-11	s	CONDUCTOR, CHIP (1608)
R103	1-216-864-11	s	CONDUCTOR, CHIP (1608)
R105	1-216-864-11	s	CONDUCTOR, CHIP (1608)
R106	1-216-864-11	s	CONDUCTOR, CHIP (1608)
R108	1-216-864-11	s	CONDUCTOR, CHIP (1608)
R109	1-216-864-11	s	CONDUCTOR, CHIP (1608)
R110	1-216-864-11	s	CONDUCTOR, CHIP (1608)
R111	1-218-652-11	s	RESISTOR,CHIP 22 1/16W (1608)
R112	1-218-708-11	s	RESISTOR,CHIP 4.7K 1/16W(1608)
R113	1-218-716-11	s	RESISTOR,CHIP 10K 1/16W(1608)

(DPR-208 BOARD)

Ref. No. or Q'ty	Part No.	SP	Description
R114	1-218-748-11	s	RESISTOR,CHIP 220K 1/16W(1608)
R115	1-218-680-11	s	RESISTOR,CHIP 330 1/16W(1608)
R116	1-218-726-11	s	RESISTOR CHIP 27K 1/16W (1608)
R117	1-218-740-11	s	RESISTOR,CHIP 100K 1/16W(1608)
RB100	1-239-621-11	s	NETWORK RESISTOR 22 (1608)
RB101	1-239-621-11	s	NETWORK RESISTOR 22 (1608)
RB102	1-239-711-11	s	NETWORK, RESISTOR 0 (1608)
RB103	1-239-711-11	s	NETWORK, RESISTOR 0 (1608)
RB104	1-239-711-11	s	NETWORK, RESISTOR 0 (1608)
RB105	1-239-711-11	s	NETWORK, RESISTOR 0 (1608)
RB106	1-239-711-11	s	NETWORK, RESISTOR 0 (1608)
RB107	1-239-711-11	s	NETWORK, RESISTOR 0 (1608)
RB108	1-236-908-11	s	RESISTOR,NETWORK 10K (3216)
RB109	1-239-430-11	s	NETWORK RESISTOR 4.7K (1608)

DPR-229/HM/M BOARD [SUFFIX 11-13]

---

*1: [Lot No. 352 - 554] [Board No. suffix 11 - 13]
*2: [Lot No. 421 - 554] [Board No. suffix 12, 13]
*3: [Lot No. 461 - 554] [Board No. suffix 13]

*H, *E : [Lot No. 352 -] HDW-M2000/P, M2100/P
*M, *E, *F: [Lot No. 352 -] DVW-M2000/P
[Lot No. 352 -] MSW-M2000/P, M2100/P
[Lot No. 495 -] MSW-M2000E/P, M2100E/P
*A, *F : [Lot No. 352 -] MSW-A2000/P

Ref. No. or Q'ty		Part No.	SP	Description
1pc	*H	A-8346-101-A	s	MOUNTED CIRCUIT BOARD, DPR-229HM
	*M	A-8346-097-A	s	MOUNTED CIRCUIT BOARD, DPR-229M
	*A	A-8346-095-A	s	MOUNTED CIRCUIT BOARD, DPR-229
4pcs		3-191-747-01	o	SUPPORT (M3), HEXAGON
8pcs		7-682-545-04	s	SCREW +B3X4
1pc		3-179-084-11	s	LEVER (R), C BOARD
1pc		3-179-085-11	s	LEVER (L), C BOARD
C100		1-131-992-11	s	CAP, CERAMIC 100000PF F 1608
C101		1-131-992-11	s	CAP, CERAMIC 100000PF F 1608
C102		1-162-927-11	s	CAPACITOR,CERAMIC 100PF/50V CH
C103		1-126-394-11	s	CAPACITOR,ELECT 10MF/16V(CHIP)
C104		1-131-992-11	s	CAP, CERAMIC 100000PF F 1608
C105		1-131-992-11	s	CAP, CERAMIC 100000PF F 1608
C106		1-131-992-11	s	CAP, CERAMIC 100000PF F 1608
C107		1-131-992-11	s	CAP, CERAMIC 100000PF F 1608
C108		1-131-992-11	s	CAP, CERAMIC 100000PF F 1608
C109		1-131-992-11	s	CAP, CERAMIC 100000PF F 1608
C110		1-131-992-11	s	CAP, CERAMIC 100000PF F 1608
C111		1-131-992-11	s	CAP, CERAMIC 100000PF F 1608
C112		1-131-992-11	s	CAP, CERAMIC 100000PF F 1608
C113		1-131-992-11	s	CAP, CERAMIC 100000PF F 1608
C114		1-131-992-11	s	CAP, CERAMIC 100000PF F 1608
C115		1-131-992-11	s	CAP, CERAMIC 100000PF F 1608
C116		1-131-992-11	s	CAP, CERAMIC 100000PF F 1608
C117		1-131-992-11	s	CAP, CERAMIC 100000PF F 1608
C118		1-131-992-11	s	CAP, CERAMIC 100000PF F 1608
C119		1-131-992-11	s	CAP, CERAMIC 100000PF F 1608
C120		1-131-992-11	s	CAP, CERAMIC 100000PF F 1608
C121		1-131-992-11	s	CAP, CERAMIC 100000PF F 1608
C122		1-131-992-11	s	CAP, CERAMIC 100000PF F 1608
C123		1-131-992-11	s	CAP, CERAMIC 100000PF F 1608
C124		1-131-992-11	s	CAP, CERAMIC 100000PF F 1608
C125		1-131-992-11	s	CAP, CERAMIC 100000PF F 1608
C126		1-131-992-11	s	CAP, CERAMIC 100000PF F 1608
C127		1-131-992-11	s	CAP, CERAMIC 100000PF F 1608
C200		1-126-394-11	s	CAPACITOR,ELECT 10MF/16V(CHIP)
C201		1-131-992-11	s	CAP, CERAMIC 100000PF F 1608
C202		1-131-992-11	s	CAP, CERAMIC 100000PF F 1608
C203		1-131-992-11	s	CAP, CERAMIC 100000PF F 1608
C204		1-126-394-11	s	CAPACITOR,ELECT 10MF/16V(CHIP)
C205		1-131-992-11	s	CAP, CERAMIC 100000PF F 1608
C206		1-131-992-11	s	CAP, CERAMIC 100000PF F 1608
C207		1-126-394-11	s	CAPACITOR,ELECT 10MF/16V(CHIP)
C208		1-131-992-11	s	CAP, CERAMIC 100000PF F 1608
C209		1-131-992-11	s	CAP, CERAMIC 100000PF F 1608
C210		1-131-992-11	s	CAP, CERAMIC 100000PF F 1608
C211	*2	1-127-692-11	s	CAP, CHIP CERAMIC 10MF B 3216
	*1	1-104-851-11	s	CAPACITOR,TANTALUM 10MF/10V
C212	*2	1-127-692-11	s	CAP, CHIP CERAMIC 10MF B 3216
	*1	1-104-851-11	s	CAPACITOR,TANTALUM 10MF/10V
C213		1-131-992-11	s	CAP, CERAMIC 100000PF F 1608
C214		1-131-992-11	s	CAP, CERAMIC 100000PF F 1608
C215		1-131-992-11	s	CAP, CERAMIC 100000PF F 1608

(DPR-229/HM/M BOARD [SUFFIX 11-13])

Ref. No. or Q'ty		Part No.	SP	Description
C216		1-131-992-11	s	CAP, CERAMIC 100000PF F 1608
C217		1-131-992-11	s	CAP, CERAMIC 100000PF F 1608
C218		1-131-992-11	s	CAP, CERAMIC 100000PF F 1608
C219		1-131-992-11	s	CAP, CERAMIC 100000PF F 1608
C220		1-131-992-11	s	CAP, CERAMIC 100000PF F 1608
C221		1-131-992-11	s	CAP, CERAMIC 100000PF F 1608
C222		1-131-992-11	s	CAP, CERAMIC 100000PF F 1608
C223		1-131-992-11	s	CAP, CERAMIC 100000PF F 1608
C224		1-131-992-11	s	CAP, CERAMIC 100000PF F 1608
C225		1-131-992-11	s	CAP, CERAMIC 100000PF F 1608
C226		1-131-992-11	s	CAP, CERAMIC 100000PF F 1608
C227		1-131-992-11	s	CAP, CERAMIC 100000PF F 1608
C228		1-131-992-11	s	CAP, CERAMIC 100000PF F 1608
C230	*H	1-126-394-11	s	CAPACITOR,ELECT 10MF/16V(CHIP)
C231	*H	1-131-992-11	s	CAP, CERAMIC 100000PF F 1608
C232	*H	1-131-992-11	s	CAP, CERAMIC 100000PF F 1608
C233	*H	1-131-992-11	s	CAP, CERAMIC 100000PF F 1608
C234		1-131-992-11	s	CAP, CERAMIC 100000PF F 1608
C235		1-131-992-11	s	CAP, CERAMIC 100000PF F 1608
C300		1-131-992-11	s	CAP, CERAMIC 100000PF F 1608
C301		1-131-992-11	s	CAP, CERAMIC 100000PF F 1608
C302		1-131-992-11	s	CAP, CERAMIC 100000PF F 1608
C303		1-131-992-11	s	CAP, CERAMIC 100000PF F 1608
C304		1-126-394-11	s	CAPACITOR,ELECT 10MF/16V(CHIP)
C305		1-131-992-11	s	CAP, CERAMIC 100000PF F 1608
C306		1-131-992-11	s	CAP, CERAMIC 100000PF F 1608
C307		1-131-992-11	s	CAP, CERAMIC 100000PF F 1608
C308		1-131-992-11	s	CAP, CERAMIC 100000PF F 1608
C309		1-131-992-11	s	CAP, CERAMIC 100000PF F 1608
C310		1-131-992-11	s	CAP, CERAMIC 100000PF F 1608
C311		1-131-992-11	s	CAP, CERAMIC 100000PF F 1608
C312		1-131-992-11	s	CAP, CERAMIC 100000PF F 1608
C313		1-131-992-11	s	CAP, CERAMIC 100000PF F 1608
C314		1-126-394-11	s	CAPACITOR,ELECT 10MF/16V(CHIP)
C315		1-131-992-11	s	CAP, CERAMIC 100000PF F 1608
C316		1-131-992-11	s	CAP, CERAMIC 100000PF F 1608
C320		1-131-992-11	s	CAP, CERAMIC 100000PF F 1608
C321		1-131-992-11	s	CAP, CERAMIC 100000PF F 1608
C322		1-131-992-11	s	CAP, CERAMIC 100000PF F 1608
C323		1-131-992-11	s	CAP, CERAMIC 100000PF F 1608
C324		1-131-992-11	s	CAP, CERAMIC 100000PF F 1608
C325		1-131-992-11	s	CAP, CERAMIC 100000PF F 1608
C326		1-131-992-11	s	CAP, CERAMIC 100000PF F 1608
C327		1-131-992-11	s	CAP, CERAMIC 100000PF F 1608
C328		1-131-992-11	s	CAP, CERAMIC 100000PF F 1608
C329		1-131-992-11	s	CAP, CERAMIC 100000PF F 1608
C330		1-131-992-11	s	CAP, CERAMIC 100000PF F 1608
C331		1-126-394-11	s	CAPACITOR,ELECT 10MF/16V(CHIP)
C332		1-131-992-11	s	CAP, CERAMIC 100000PF F 1608
C333		1-131-992-11	s	CAP, CERAMIC 100000PF F 1608
C334		1-131-992-11	s	CAP, CERAMIC 100000PF F 1608
C335		1-131-992-11	s	CAP, CERAMIC 100000PF F 1608
C336		1-131-992-11	s	CAP, CERAMIC 100000PF F 1608
C337		1-131-992-11	s	CAP, CERAMIC 100000PF F 1608
C338		1-131-992-11	s	CAP, CERAMIC 100000PF F 1608
C339		1-131-992-11	s	CAP, CERAMIC 100000PF F 1608
C404		1-131-992-11	s	CAP, CERAMIC 100000PF F 1608
C412		1-126-394-11	s	CAPACITOR,ELECT 10MF/16V(CHIP)
C413		1-131-992-11	s	CAP, CERAMIC 100000PF F 1608

(DPR-229/HM/M BOARD [SUFFIX 11-13])

Ref. No. or Q'ty	Part No.	SP	Description
C415	*F 1-131-992-11	s	CAP, CERAMIC 100000PF F 1608
C417	*F 1-131-992-11	s	CAP, CERAMIC 100000PF F 1608
C418	1-126-394-11	s	CAPACITOR,ELECT 10MF/16V(CHIP)
C419	1-131-992-11	s	CAP, CERAMIC 100000PF F 1608
C420	1-131-992-11	s	CAP, CERAMIC 100000PF F 1608
C421	1-131-992-11	s	CAP, CERAMIC 100000PF F 1608
C422	1-131-992-11	s	CAP, CERAMIC 100000PF F 1608
C423	1-131-992-11	s	CAP, CERAMIC 100000PF F 1608
C424	1-131-992-11	s	CAP, CERAMIC 100000PF F 1608
C425	1-131-992-11	s	CAP, CERAMIC 100000PF F 1608
C426	1-131-992-11	s	CAP, CERAMIC 100000PF F 1608
C427	1-131-992-11	s	CAP, CERAMIC 100000PF F 1608
C428	1-131-992-11	s	CAP, CERAMIC 100000PF F 1608
C429	1-131-992-11	s	CAP, CERAMIC 100000PF F 1608
C430	1-131-992-11	s	CAP, CERAMIC 100000PF F 1608
C431	1-131-992-11	s	CAP, CERAMIC 100000PF F 1608
C432	1-131-992-11	s	CAP, CERAMIC 100000PF F 1608
C433	1-126-394-11	s	CAPACITOR,ELECT 10MF/16V(CHIP)
C434	*F 1-126-394-11	s	CAPACITOR,ELECT 10MF/16V(CHIP)
C435	*F 1-131-992-11	s	CAP, CERAMIC 100000PF F 1608
C437	*F 1-131-992-11	s	CAP, CERAMIC 100000PF F 1608
C439	*F 1-131-992-11	s	CAP, CERAMIC 100000PF F 1608
C440	1-131-992-11	s	CAP, CERAMIC 100000PF F 1608
C500	*E 1-131-992-11	s	CAP, CERAMIC 100000PF F 1608
C501	*E 1-131-992-11	s	CAP, CERAMIC 100000PF F 1608
C502	*E 1-131-992-11	s	CAP, CERAMIC 100000PF F 1608
C503	*E 1-131-992-11	s	CAP, CERAMIC 100000PF F 1608
C504	*E 1-131-992-11	s	CAP, CERAMIC 100000PF F 1608
C505	*E 1-131-992-11	s	CAP, CERAMIC 100000PF F 1608
C506	*E 1-131-992-11	s	CAP, CERAMIC 100000PF F 1608
C507	*E 1-131-992-11	s	CAP, CERAMIC 100000PF F 1608
C508	*E 1-131-992-11	s	CAP, CERAMIC 100000PF F 1608
C509	*E 1-131-992-11	s	CAP, CERAMIC 100000PF F 1608
C510	*E 1-131-992-11	s	CAP, CERAMIC 100000PF F 1608
C511	*E 1-131-992-11	s	CAP, CERAMIC 100000PF F 1608
C512	*E 1-131-992-11	s	CAP, CERAMIC 100000PF F 1608
C513	*E 1-131-992-11	s	CAP, CERAMIC 100000PF F 1608
C514	*E 1-131-992-11	s	CAP, CERAMIC 100000PF F 1608
C515	*E 1-131-992-11	s	CAP, CERAMIC 100000PF F 1608
C516	*E 1-131-992-11	s	CAP, CERAMIC 100000PF F 1608
C517	*E 1-131-992-11	s	CAP, CERAMIC 100000PF F 1608
C518	*E 1-131-992-11	s	CAP, CERAMIC 100000PF F 1608
C519	*E 1-131-992-11	s	CAP, CERAMIC 100000PF F 1608
C520	*E 1-131-992-11	s	CAP, CERAMIC 100000PF F 1608
C521	*E 1-131-992-11	s	CAP, CERAMIC 100000PF F 1608
C522	*E 1-131-992-11	s	CAP, CERAMIC 100000PF F 1608
C523	*E 1-126-394-11	s	CAPACITOR,ELECT 10MF/16V(CHIP)
C524	*E 1-131-992-11	s	CAP, CERAMIC 100000PF F 1608
C525	*E 1-131-992-11	s	CAP, CERAMIC 100000PF F 1608
C526	*E 1-162-922-11	s	CAPACITOR,CERAMIC 39PF/50V CH
C527	*E 1-131-992-11	s	CAP, CERAMIC 100000PF F 1608
C528	*E 1-131-992-11	s	CAP, CERAMIC 100000PF F 1608
C529	*E 1-131-992-11	s	CAP, CERAMIC 100000PF F 1608
C530	*E 1-131-992-11	s	CAP, CERAMIC 100000PF F 1608
C531	*E 1-131-992-11	s	CAP, CERAMIC 100000PF F 1608
C532	*E 1-131-992-11	s	CAP, CERAMIC 100000PF F 1608
C533	*E 1-131-992-11	s	CAP, CERAMIC 100000PF F 1608
C534	*E 1-131-992-11	s	CAP, CERAMIC 100000PF F 1608
C535	*E 1-131-992-11	s	CAP, CERAMIC 100000PF F 1608

(DPR-229/HM/M BOARD [SUFFIX 11-13])

Ref. No. or Q'ty	Part No.	SP	Description
C536	*E 1-131-992-11	s	CAP, CERAMIC 100000PF F 1608
C537	*E 1-131-992-11	s	CAP, CERAMIC 100000PF F 1608
C538	*E 1-131-992-11	s	CAP, CERAMIC 100000PF F 1608
C539	*E 1-131-992-11	s	CAP, CERAMIC 100000PF F 1608
C540	*E 1-131-992-11	s	CAP, CERAMIC 100000PF F 1608
C541	*E 1-131-992-11	s	CAP, CERAMIC 100000PF F 1608
C542	*E 1-131-992-11	s	CAP, CERAMIC 100000PF F 1608
C543	*E 1-131-992-11	s	CAP, CERAMIC 100000PF F 1608
C544	*E 1-131-992-11	s	CAP, CERAMIC 100000PF F 1608
C545	*E 1-131-992-11	s	CAP, CERAMIC 100000PF F 1608
C546	*E 1-131-992-11	s	CAP, CERAMIC 100000PF F 1608
C547	*E 1-131-992-11	s	CAP, CERAMIC 100000PF F 1608
C548	*E 1-131-992-11	s	CAP, CERAMIC 100000PF F 1608
C549	*E 1-131-992-11	s	CAP, CERAMIC 100000PF F 1608
C550	*E 1-131-992-11	s	CAP, CERAMIC 100000PF F 1608
C551	*E 1-131-992-11	s	CAP, CERAMIC 100000PF F 1608
C552	*E 1-131-992-11	s	CAP, CERAMIC 100000PF F 1608
C606	1-131-992-11	s	CAP, CERAMIC 100000PF F 1608
C607	1-126-394-11	s	CAPACITOR,ELECT 10MF/16V(CHIP)
C608	1-131-992-11	s	CAP, CERAMIC 100000PF F 1608
C609	1-131-992-11	s	CAP, CERAMIC 100000PF F 1608
C650	1-162-970-11	s	CAPACITOR CERAMIC 0.01MF/25V B
C651	1-162-970-11	s	CAPACITOR CERAMIC 0.01MF/25V B
C652	1-131-992-11	s	CAP, CERAMIC 100000PF F 1608
C653	1-131-992-11	s	CAP, CERAMIC 100000PF F 1608
C654	1-126-394-11	s	CAPACITOR,ELECT 10MF/16V(CHIP)
C655	1-131-992-11	s	CAP, CERAMIC 100000PF F 1608
C656	1-131-992-11	s	CAP, CERAMIC 100000PF F 1608
C657	1-131-992-11	s	CAP, CERAMIC 100000PF F 1608
C658	1-131-992-11	s	CAP, CERAMIC 100000PF F 1608
C659	1-131-992-11	s	CAP, CERAMIC 100000PF F 1608
C660	1-131-992-11	s	CAP, CERAMIC 100000PF F 1608
C661	1-131-992-11	s	CAP, CERAMIC 100000PF F 1608
C662	1-131-992-11	s	CAP, CERAMIC 100000PF F 1608
C663	1-126-394-11	s	CAPACITOR,ELECT 10MF/16V(CHIP)
C664	*2 1-165-870-21	s	CAPACITOR, ELECT 100MF(6.3X6)
	*1 1-165-811-11	s	CAPACITOR CHIP CERAMIC 22MF B
C665	1-126-394-11	s	CAPACITOR,ELECT 10MF/16V(CHIP)
C666	1-131-992-11	s	CAP, CERAMIC 100000PF F 1608
C667	1-131-992-11	s	CAP, CERAMIC 100000PF F 1608
C668	1-131-992-11	s	CAP, CERAMIC 100000PF F 1608
C669	1-131-992-11	s	CAP, CERAMIC 100000PF F 1608
C670	1-131-992-11	s	CAP, CERAMIC 100000PF F 1608
C671	1-131-992-11	s	CAP, CERAMIC 100000PF F 1608
C672	1-131-992-11	s	CAP, CERAMIC 100000PF F 1608
C673	1-131-992-11	s	CAP, CERAMIC 100000PF F 1608
C674	1-131-992-11	s	CAP, CERAMIC 100000PF F 1608
C675	1-131-992-11	s	CAP, CERAMIC 100000PF F 1608
C676	1-131-992-11	s	CAP, CERAMIC 100000PF F 1608
C677	1-131-992-11	s	CAP, CERAMIC 100000PF F 1608
C678	1-131-992-11	s	CAP, CERAMIC 100000PF F 1608
C679	1-131-992-11	s	CAP, CERAMIC 100000PF F 1608
C680	1-131-992-11	s	CAP, CERAMIC 100000PF F 1608
C681	1-131-992-11	s	CAP, CERAMIC 100000PF F 1608
C682	1-131-992-11	s	CAP, CERAMIC 100000PF F 1608
C683	1-131-992-11	s	CAP, CERAMIC 100000PF F 1608
C684	1-131-992-11	s	CAP, CERAMIC 100000PF F 1608
C685	1-162-925-11	s	CAPACITOR,CERAMIC 68PF/50V CH
C686	*2 1-165-872-21	s	CAPACITOR,SOLID ELECT 47MF
	*1 1-110-569-21	s	CAPACITOR CHIP TANTAL47MF/6.3V

(DPR-229/HM/M BOARD [SUFFIX 11-13])

Ref. No. or Q'ty	Part No.	SP	Description
C687	1-126-394-11	s	CAPACITOR,ELECT 10MF/16V(CHIP)
C688	1-126-394-11	s	CAPACITOR,ELECT 10MF/16V(CHIP)
C689	1-131-992-11	s	CAP, CERAMIC 100000PF F 1608
C690	1-131-992-11	s	CAP, CERAMIC 100000PF F 1608
C700	1-131-992-11	s	CAP, CERAMIC 100000PF F 1608
C701	1-113-503-11	s	CAPACITOR,CERAMIC 3900PF CH
C702	1-162-968-11	s	CAPACITOR,CERAMIC 4700PF/50V B
C703	1-131-992-11	s	CAP, CERAMIC 100000PF F 1608
C704	1-131-992-11	s	CAP, CERAMIC 100000PF F 1608
C705	1-131-992-11	s	CAP, CERAMIC 100000PF F 1608
C706	1-131-992-11	s	CAP, CERAMIC 100000PF F 1608
C707	1-131-992-11	s	CAP, CERAMIC 100000PF F 1608
C708	1-131-992-11	s	CAP, CERAMIC 100000PF F 1608
C709	1-131-992-11	s	CAP, CERAMIC 100000PF F 1608
C710	1-131-992-11	s	CAP, CERAMIC 100000PF F 1608
C711	1-131-992-11	s	CAP, CERAMIC 100000PF F 1608
C712	1-131-992-11	s	CAP, CERAMIC 100000PF F 1608
C713	1-113-503-11	s	CAPACITOR,CERAMIC 3900PF CH
C714	1-162-968-11	s	CAPACITOR,CERAMIC 4700PF/50V B
C715	1-131-992-11	s	CAP, CERAMIC 100000PF F 1608
C716	1-131-992-11	s	CAP, CERAMIC 100000PF F 1608
C717	1-131-992-11	s	CAP, CERAMIC 100000PF F 1608
C718	1-131-992-11	s	CAP, CERAMIC 100000PF F 1608
C719	1-131-992-11	s	CAP, CERAMIC 100000PF F 1608
C720	1-131-992-11	s	CAP, CERAMIC 100000PF F 1608
C721	1-131-992-11	s	CAP, CERAMIC 100000PF F 1608
C722	1-131-992-11	s	CAP, CERAMIC 100000PF F 1608
C723	1-131-992-11	s	CAP, CERAMIC 100000PF F 1608
C724	1-131-992-11	s	CAP, CERAMIC 100000PF F 1608
C725	1-113-503-11	s	CAPACITOR,CERAMIC 3900PF CH
C726	1-162-968-11	s	CAPACITOR,CERAMIC 4700PF/50V B
C727	1-131-992-11	s	CAP, CERAMIC 100000PF F 1608
C728	1-131-992-11	s	CAP, CERAMIC 100000PF F 1608
C729	1-131-992-11	s	CAP, CERAMIC 100000PF F 1608
C730	1-131-992-11	s	CAP, CERAMIC 100000PF F 1608
C731	1-131-992-11	s	CAP, CERAMIC 100000PF F 1608
C732	1-131-992-11	s	CAP, CERAMIC 100000PF F 1608
C733	1-131-992-11	s	CAP, CERAMIC 100000PF F 1608
C734	1-131-992-11	s	CAP, CERAMIC 100000PF F 1608
C735	1-131-992-11	s	CAP, CERAMIC 100000PF F 1608
C736	1-131-992-11	s	CAP, CERAMIC 100000PF F 1608
C737	1-113-503-11	s	CAPACITOR,CERAMIC 3900PF CH
C738	1-162-968-11	s	CAPACITOR,CERAMIC 4700PF/50V B
C739	1-131-992-11	s	CAP, CERAMIC 100000PF F 1608
C740	1-131-992-11	s	CAP, CERAMIC 100000PF F 1608
C741	1-131-992-11	s	CAP, CERAMIC 100000PF F 1608
C742	1-131-992-11	s	CAP, CERAMIC 100000PF F 1608
C743	1-131-992-11	s	CAP, CERAMIC 100000PF F 1608
C744	1-131-992-11	s	CAP, CERAMIC 100000PF F 1608
C745	1-131-992-11	s	CAP, CERAMIC 100000PF F 1608
C746	1-131-992-11	s	CAP, CERAMIC 100000PF F 1608
C747	1-131-992-11	s	CAP, CERAMIC 100000PF F 1608
C748	1-131-992-11	s	CAP, CERAMIC 100000PF F 1608
C800	1-126-394-11	s	CAPACITOR,ELECT 10MF/16V(CHIP)
C801	1-131-992-11	s	CAP, CERAMIC 100000PF F 1608
C802	1-131-992-11	s	CAP, CERAMIC 100000PF F 1608
C803	1-131-992-11	s	CAP, CERAMIC 100000PF F 1608
C804	1-131-992-11	s	CAP, CERAMIC 100000PF F 1608
C810	1-131-992-11	s	CAP, CERAMIC 100000PF F 1608

(DPR-229/HM/M BOARD [SUFFIX 11-13])

Ref. No. or Q'ty	Part No.	SP	Description
C811	1-131-992-11	s	CAP, CERAMIC 100000PF F 1608
C812	1-128-590-11	s	CAPACITOR ELECT 100MF/6.3V(105
C813	1-128-590-11	s	CAPACITOR ELECT 100MF/6.3V(105
C814	1-131-992-11	s	CAP, CERAMIC 100000PF F 1608
C815	1-131-992-11	s	CAP, CERAMIC 100000PF F 1608
C816	1-131-992-11	s	CAP, CERAMIC 100000PF F 1608
C817	1-131-992-11	s	CAP, CERAMIC 100000PF F 1608
C818	1-131-992-11	s	CAP, CERAMIC 100000PF F 1608
C819	1-128-590-11	s	CAPACITOR ELECT 100MF/6.3V(105
C820	1-128-590-11	s	CAPACITOR ELECT 100MF/6.3V(105
C821	1-128-590-11	s	CAPACITOR ELECT 100MF/6.3V(105
C822	1-128-590-11	s	CAPACITOR ELECT 100MF/6.3V(105
C823	1-131-992-11	s	CAP, CERAMIC 100000PF F 1608
C827	1-131-992-11	s	CAP, CERAMIC 100000PF F 1608
C829	1-131-992-11	s	CAP, CERAMIC 100000PF F 1608
C831	1-131-992-11	s	CAP, CERAMIC 100000PF F 1608
C832	1-131-992-11	s	CAP, CERAMIC 100000PF F 1608
C833	1-131-992-11	s	CAP, CERAMIC 100000PF F 1608
C834	1-131-992-11	s	CAP, CERAMIC 100000PF F 1608
C835	1-131-992-11	s	CAP, CERAMIC 100000PF F 1608
C837	1-131-992-11	s	CAP, CERAMIC 100000PF F 1608
C838	1-131-992-11	s	CAP, CERAMIC 100000PF F 1608
C839	1-126-394-11	s	CAPACITOR,ELECT 10MF/16V(CHIP)
C842	1-131-992-11	s	CAP, CERAMIC 100000PF F 1608
C843	1-131-992-11	s	CAP, CERAMIC 100000PF F 1608
C844	1-131-992-11	s	CAP, CERAMIC 100000PF F 1608
C845	1-131-992-11	s	CAP, CERAMIC 100000PF F 1608
C846	1-131-992-11	s	CAP, CERAMIC 100000PF F 1608
C847	1-131-992-11	s	CAP, CERAMIC 100000PF F 1608
C848	1-126-394-11	s	CAPACITOR,ELECT 10MF/16V(CHIP)
C849	1-126-394-11	s	CAPACITOR,ELECT 10MF/16V(CHIP)
C850	1-131-992-11	s	CAP, CERAMIC 100000PF F 1608
C851	1-131-992-11	s	CAP, CERAMIC 100000PF F 1608
C852	1-131-992-11	s	CAP, CERAMIC 100000PF F 1608
C853	1-126-394-11	s	CAPACITOR,ELECT 10MF/16V(CHIP)
C862	1-131-992-11	s	CAP, CERAMIC 100000PF F 1608
C863	1-131-992-11	s	CAP, CERAMIC 100000PF F 1608
C864	1-131-992-11	s	CAP, CERAMIC 100000PF F 1608
C865	1-131-992-11	s	CAP, CERAMIC 100000PF F 1608
C867	*2 1-127-861-11	s	CAP, CERAMIC 2.2MF B (3216)
	*1 1-113-986-11	s	CAPACITOR,TANTALUM 2.2MF/25V
C868	*2 1-127-861-11	s	CAP, CERAMIC 2.2MF B (3216)
	*1 1-113-986-11	s	CAPACITOR,TANTALUM 2.2MF/25V
C869	1-131-992-11	s	CAP, CERAMIC 100000PF F 1608
C912	1-131-992-11	s	CAP, CERAMIC 100000PF F 1608
C913	1-126-394-11	s	CAPACITOR,ELECT 10MF/16V(CHIP)
C914	1-126-394-11	s	CAPACITOR,ELECT 10MF/16V(CHIP)
C915	1-131-992-11	s	CAP, CERAMIC 100000PF F 1608
C916	1-131-992-11	s	CAP, CERAMIC 100000PF F 1608
C917	1-131-992-11	s	CAP, CERAMIC 100000PF F 1608
C918	1-131-992-11	s	CAP, CERAMIC 100000PF F 1608
C919	1-131-992-11	s	CAP, CERAMIC 100000PF F 1608
C920	1-131-992-11	s	CAP, CERAMIC 100000PF F 1608
C921	1-131-992-11	s	CAP, CERAMIC 100000PF F 1608
C922	1-131-992-11	s	CAP, CERAMIC 100000PF F 1608
C923	1-131-992-11	s	CAP, CERAMIC 100000PF F 1608
C924	1-131-992-11	s	CAP, CERAMIC 100000PF F 1608
C925	1-131-992-11	s	CAP, CERAMIC 100000PF F 1608
C926	1-131-992-11	s	CAP, CERAMIC 100000PF F 1608

(DPR-229/HM/M BOARD [SUFFIX 11-13])

Ref. No. or Q'ty	Part No.	SP	Description
C927	1-131-992-11	s	CAP, CERAMIC 100000PF F 1608
C928	1-131-992-11	s	CAP, CERAMIC 100000PF F 1608
C929	1-131-992-11	s	CAP, CERAMIC 100000PF F 1608
C930	1-131-992-11	s	CAP, CERAMIC 100000PF F 1608
C931	1-131-992-11	s	CAP, CERAMIC 100000PF F 1608
C932	1-131-992-11	s	CAP, CERAMIC 100000PF F 1608
C933	1-131-992-11	s	CAP, CERAMIC 100000PF F 1608
C934	1-131-992-11	s	CAP, CERAMIC 100000PF F 1608
C935	1-131-992-11	s	CAP, CERAMIC 100000PF F 1608
C936	1-131-992-11	s	CAP, CERAMIC 100000PF F 1608
C937	1-131-992-11	s	CAP, CERAMIC 100000PF F 1608
C938	1-131-992-11	s	CAP, CERAMIC 100000PF F 1608
C939	1-131-992-11	s	CAP, CERAMIC 100000PF F 1608
CN16	1-580-789-91	s	PIN, CONNECTOR 6P
E100	1-535-877-22	s	CHIP,CHECKER (TEST POINT)
E200	1-535-877-22	s	CHIP,CHECKER (TEST POINT)
E300	1-535-877-22	s	CHIP,CHECKER (TEST POINT)
E400	1-535-877-22	s	CHIP,CHECKER (TEST POINT)
E401	1-535-877-22	s	CHIP,CHECKER (TEST POINT)
*M E500	1-535-877-22	s	CHIP,CHECKER (TEST POINT)
*E E600	1-535-877-22	s	CHIP,CHECKER (TEST POINT)
E700	1-535-877-22	s	CHIP,CHECKER (TEST POINT)
E800	1-535-877-22	s	CHIP,CHECKER (TEST POINT)
⚠ F800	1-576-270-11	s	FUSE CHIP 4A/125V (6125)
⚠ F802	1-576-270-11	s	FUSE CHIP 4A/125V (6125)
⚠ F803	1-576-270-11	s	FUSE CHIP 4A/125V (6125)
FB200	1-469-094-11	s	FERRITE, EMI (SMD)
FL200	1-239-898-22	s	FILTER, EMI (SMD)
FL600	1-233-674-21	s	FILTER, EMI
FL601	1-233-674-21	s	FILTER, EMI
IC100	8-759-549-15	s	IC SN74LV245APWR
IC101	8-759-549-15	s	IC SN74LV245APWR
IC102	8-759-523-84	s	IC TC74VHC14FT (EL)
IC103	8-759-491-46	s	IC TC74VHCT04AFT (EL)
IC104	8-759-491-46	s	IC TC74VHCT04AFT (EL)
IC105	8-759-523-94	s	IC TC74VHC32FT(EL)
IC106	8-759-549-01	s	IC SN74LV125APWR
IC107	8-759-392-77	s	IC SN74LVC245APW (E20)
IC108	8-759-549-15	s	IC SN74LV245APWR
IC109	8-759-524-07	s	IC TC74VHC138FT(EL)
IC110	8-759-549-15	s	IC SN74LV245APWR
IC111	8-759-491-46	s	IC TC74VHCT04AFT (EL)
IC112	8-759-549-15	s	IC SN74LV245APWR
IC113	8-759-549-15	s	IC SN74LV245APWR
IC114	8-759-549-15	s	IC SN74LV245APWR
IC115	8-759-549-15	s	IC SN74LV245APWR
IC116	8-759-549-15	s	IC SN74LV245APWR
IC117	8-759-549-15	s	IC SN74LV245APWR
IC118	8-759-524-07	s	IC TC74VHC138FT(EL)
IC119	8-759-524-07	s	IC TC74VHC138FT(EL)
IC120	8-759-523-81	s	IC TC74VHC08FT(EL)
IC121	6-706-487-01	s	IC TC7SH08FU(T5RSOYJF)
IC122	8-759-523-92	s	IC TC74VHC21FT(EL)
IC123	8-759-549-15	s	IC SN74LV245APWR
IC124	8-752-392-03	s	IC CXD1095BR
IC125	6-706-487-01	s	IC TC7SH08FU(T5RSOYJF)

(DPR-229/HM/M BOARD [SUFFIX 11-13])

Ref. No. or Q'ty	Part No.	SP	Description
IC126	6-706-482-01	s	IC TC7SH00FU(T5RSOYJF)
IC200	8-759-475-55	s	IC TC74LCX574FT(EL)
IC201	8-759-475-55	s	IC TC74LCX574FT(EL)
IC202	8-759-475-55	s	IC TC74LCX574FT(EL)
IC203	8-759-669-41	s	IC SN74LVC125APWR-12
IC204	6-706-484-01	s	IC TC7SH04FU(T5RSOYJF)
IC205	8-759-669-41	s	IC SN74LVC125APWR-12
IC208	8-759-392-77	s	IC SN74LVC245APW (E20)
IC209	8-759-392-77	s	IC SN74LVC245APW (E20)
IC210	8-759-392-77	s	IC SN74LVC245APW (E20)
*1 IC211	6-702-238-11	s	IC HY57V643220CT-7TR
*H IC212	8-759-712-32	s	IC SN65LVDS389DBTR
*H IC213	8-759-712-32	s	IC SN65LVDS389DBTR
*H IC214	8-759-712-32	s	IC SN65LVDS389DBTR
IC217	6-706-484-01	s	IC TC7SH04FU(T5RSOYJF)
IC301	8-759-449-09	s	IC CXD8945BR
IC302	8-759-524-10	s	IC TC74VHC157FT (EL)
IC303	8-759-524-10	s	IC TC74VHC157FT (EL)
IC307	6-700-497-01	s	IC MSM56V16800F-10TS-K
IC308	6-700-497-01	s	IC MSM56V16800F-10TS-K
IC309	6-700-497-01	s	IC MSM56V16800F-10TS-K
IC310	8-759-392-77	s	IC SN74LVC245APW (E20)
IC311	8-759-392-77	s	IC SN74LVC245APW (E20)
*1 IC312	6-702-238-11	s	IC HY57V643220CT-7TR
IC401	8-759-669-41	s	IC SN74LVC125APWR-12
*F IC402	8-759-712-31	s	IC SN65LVDT388DBTR
*F IC404	8-759-712-31	s	IC SN65LVDT388DBTR
*F IC406	8-759-639-86	s	IC SN65LVDS32DR
IC407	8-759-656-31	o	IC CXD9094AR
*F IC408	8-759-712-32	s	IC SN65LVDS389DBTR
*F IC410	8-759-712-32	s	IC SN65LVDS389DBTR
*F IC412	8-759-712-32	s	IC SN65LVDS389DBTR
IC413	8-759-639-86	s	IC SN65LVDS32DR
*E IC500	8-759-199-86	s	IC CXD8807BR
*E IC501	8-759-549-15	s	IC SN74LV245APWR
*E IC502	8-759-549-15	s	IC SN74LV245APWR
*E IC506	8-752-373-24	s	IC CXK48324R-1-T6
*E IC507	8-752-373-24	s	IC CXK48324R-1-T6
*E IC508	8-752-373-24	s	IC CXK48324R-1-T6
*E IC509	8-752-373-24	s	IC CXK48324R-1-T6
*E IC510	8-752-373-24	s	IC CXK48324R-1-T6
IC601	8-759-524-09	s	IC TC74VHC153FT (EL)
IC602	8-759-475-55	s	IC TC74LCX574FT(EL)
IC603	8-759-475-55	s	IC TC74LCX574FT(EL)
IC653	8-759-549-15	s	IC SN74LV245APWR
IC654	8-759-549-15	s	IC SN74LV245APWR
IC655	8-759-664-03	s	IC LP3964EMPX-ADJ
IC700	8-752-392-03	s	IC CXD1095BR
IC701	6-702-254-01	s	IC DSPB56362PV100-1J21D
IC702	8-759-543-83	s	IC KM416V1204CT-L6
IC703	8-759-543-83	s	IC KM416V1204CT-L6
IC704	6-702-254-01	s	IC DSPB56362PV100-1J21D
IC705	8-759-543-83	s	IC KM416V1204CT-L6
IC706	8-759-543-83	s	IC KM416V1204CT-L6
IC707	6-702-254-01	s	IC DSPB56362PV100-1J21D
IC708	8-759-543-83	s	IC KM416V1204CT-L6
IC709	8-759-543-83	s	IC KM416V1204CT-L6

(DPR-229/HM/M BOARD [SUFFIX 11-13])

Ref. No. or Q'ty	Part No.	SP	Description
IC710	6-702-254-01	s	IC DSPB56362PV100-1J21D
IC711	8-759-543-83	s	IC KM416V1204CT-L6
IC712	8-759-543-83	s	IC KM416V1204CT-L6
IC801	8-759-549-15	s	IC SN74LV245APWR
IC802	6-706-487-01	s	IC TC7SH08FU(T5RSOYJF)
IC803	8-759-491-46	s	IC TC74VHCT04AFT (EL)
IC804	8-759-669-41	s	IC SN74LVC125APWR-12
IC805	8-759-475-43	s	IC TC74LCX125FT(EL)
IC808	8-759-549-15	s	IC SN74LV245APWR
IC809	8-759-523-78	s	IC TC74VHC00FT(EL)
IC810	8-759-392-77	s	IC SN74LVC245APW (E20)
IC812	8-759-669-41	s	IC SN74LVC125APWR-12
IC813	8-759-669-41	s	IC SN74LVC125APWR-12
IC814	8-759-669-41	s	IC SN74LVC125APWR-12
IC815	8-759-475-43	s	IC TC74LCX125FT(EL)
IC817	8-759-549-01	s	IC SN74LV125APWR
IC818	8-759-549-15	s	IC SN74LV245APWR
IC819	8-759-524-10	s	IC TC74VHC157FT (EL)
IC822	8-759-549-01	s	IC SN74LV125APWR
IC823	8-759-549-15	s	IC SN74LV245APWR
IC824	8-759-549-15	s	IC SN74LV245APWR
IC825	8-759-549-15	s	IC SN74LV245APWR
IC826	8-759-549-01	s	IC SN74LV125APWR
IC827	6-704-723-01	s	IC XCS20XL-4VQG100C
IC829	8-759-524-10	s	IC TC74VHC157FT (EL)
IC831	8-759-524-27	s	IC TC74VHC244FT(EL)
IC832	6-706-484-01	s	IC TC7SH04FU(T5RSOYJF)
IC833	6-803-242-02	s	IC XC18V02-DPR229IMX-V4.00
IC834	6-803-243-03	s	IC XC18V02-DPR229SX-V3.01
IC902	6-802-024-01	s	IC CXD9012BR
IC903	8-759-549-15	s	IC SN74LV245APWR
IC904	8-759-549-15	s	IC SN74LV245APWR
IC905 *1	6-702-238-11	s	IC HY57V643220CT-7TR
L100	1-412-056-11	s	INDUCTOR 4.7UH (3225)
L101	1-412-056-11	s	INDUCTOR 4.7UH (3225)
L102	1-412-056-11	s	INDUCTOR 4.7UH (3225)
L103	1-412-056-11	s	INDUCTOR 4.7UH (3225)
L200	1-412-056-11	s	INDUCTOR 4.7UH (3225)
L201	1-412-056-11	s	INDUCTOR 4.7UH (3225)
L202 *H	1-412-056-11	s	INDUCTOR 4.7UH (3225)
L402	1-412-056-11	s	INDUCTOR 4.7UH (3225)
L405 *F	1-412-056-11	s	INDUCTOR 4.7UH (3225)
L600	1-412-056-11	s	INDUCTOR 4.7UH (3225)
L651	1-412-056-11	s	INDUCTOR 4.7UH (3225)
L800	1-419-630-11	s	COIL, CHOKE 4.7UH
L801	1-419-630-11	s	COIL, CHOKE 4.7UH
L802	1-419-630-11	s	COIL, CHOKE 4.7UH
L803	1-419-630-11	s	COIL, CHOKE 4.7UH
L804	1-412-056-11	s	INDUCTOR 4.7UH (3225)
L806	1-412-056-11	s	INDUCTOR 4.7UH (3225)
L807	1-412-056-11	s	INDUCTOR 4.7UH (3225)
L808	1-412-056-11	s	INDUCTOR 4.7UH (3225)
Q200 *H	8-729-928-81	s	TRANSISTOR DTC144EE
Q400 *F	8-729-928-81	s	TRANSISTOR DTC144EE
Q800	8-729-928-81	s	TRANSISTOR DTC144EE
Q801	8-729-045-53	s	TRANSISTOR SI4431DY-T1
Q802	8-729-140-63	s	TRANSISTOR 2SA1611-M5M6

(DPR-229/HM/M BOARD [SUFFIX 11-13])

Ref. No. or Q'ty	Part No.	SP	Description
R100	1-218-895-11	s	RESISTOR,CHIP 100K 1/10W(1608)
R101	1-218-895-11	s	RESISTOR,CHIP 100K 1/10W(1608)
R102	1-218-895-11	s	RESISTOR,CHIP 100K 1/10W(1608)
R103	1-218-895-11	s	RESISTOR,CHIP 100K 1/10W(1608)
R105	1-218-895-11	s	RESISTOR,CHIP 100K 1/10W(1608)
R106	1-211-985-11	s	RESISTOR,CHIP 47 1/10W (1608)
R107	1-211-985-11	s	RESISTOR,CHIP 47 1/10W (1608)
R108	1-211-985-11	s	RESISTOR,CHIP 47 1/10W (1608)
R109	1-211-985-11	s	RESISTOR,CHIP 47 1/10W (1608)
R110	1-218-895-11	s	RESISTOR,CHIP 100K 1/10W(1608)
R111	1-218-823-11	s	RESISTOR,CHIP 100 1/10W (1608)
R115 *A	1-218-895-11	s	RESISTOR,CHIP 100K 1/10W(1608)
R117	1-218-863-11	s	RESISTOR,CHIP 4.7K 1/10W(1608)
R118	1-218-863-11	s	RESISTOR,CHIP 4.7K 1/10W(1608)
R122 *E	1-218-863-11	s	RESISTOR,CHIP 4.7K 1/10W(1608)
R124	1-218-863-11	s	RESISTOR,CHIP 4.7K 1/10W(1608)
R125 *E	1-218-863-11	s	RESISTOR,CHIP 4.7K 1/10W(1608)
R126	1-218-863-11	s	RESISTOR,CHIP 4.7K 1/10W(1608)
R130	1-216-864-11	s	CONDUCTOR, CHIP (1608)
R131	1-216-864-11	s	CONDUCTOR, CHIP (1608)
R132	1-216-864-11	s	CONDUCTOR, CHIP (1608)
R133	1-216-864-11	s	CONDUCTOR, CHIP (1608)
R134	1-218-863-11	s	RESISTOR,CHIP 4.7K 1/10W(1608)
R136	1-211-977-11	s	RESISTOR,CHIP 22 1/10W (1608)
R141	1-216-864-11	s	CONDUCTOR, CHIP (1608)
R143 *2	1-218-895-11	s	RESISTOR,CHIP 100K 1/10W(1608)
R144 *2	1-211-977-11	s	RESISTOR,CHIP 22 1/10W (1608)
R200	1-218-831-11	s	RESISTOR, CHIP 220 1/10W(1608)
R201 *A	1-211-977-11	s	RESISTOR,CHIP 22 1/10W (1608)
R202 *E	1-216-864-11	s	CONDUCTOR, CHIP (1608)
R203	1-211-985-11	s	RESISTOR,CHIP 47 1/10W (1608)
R204	1-211-977-11	s	RESISTOR,CHIP 22 1/10W (1608)
R207	1-216-864-11	s	CONDUCTOR, CHIP (1608)
R208	1-218-871-11	s	RESISTOR,CHIP 10K 1/10W (1608)
R209	1-216-864-11	s	CONDUCTOR, CHIP (1608)
R210	1-216-864-11	s	CONDUCTOR, CHIP (1608)
R212	1-216-864-11	s	CONDUCTOR, CHIP (1608)
R213	1-216-864-11	s	CONDUCTOR, CHIP (1608)
R215	1-216-864-11	s	CONDUCTOR, CHIP (1608)
R216	1-216-864-11	s	CONDUCTOR, CHIP (1608)
R217	1-216-864-11	s	CONDUCTOR, CHIP (1608)
R218	1-211-977-11	s	RESISTOR,CHIP 22 1/10W (1608)
R219	1-218-863-11	s	RESISTOR,CHIP 4.7K 1/10W(1608)
R220 *H	1-216-864-11	s	CONDUCTOR, CHIP (1608)
R221 *H	1-216-864-11	s	CONDUCTOR, CHIP (1608)
R222 *H	1-218-863-11	s	RESISTOR,CHIP 4.7K 1/10W(1608)
R300	1-216-864-11	s	CONDUCTOR, CHIP (1608)
R301	1-216-864-11	s	CONDUCTOR, CHIP (1608)
R302	1-216-864-11	s	CONDUCTOR, CHIP (1608)
R303	1-218-863-11	s	RESISTOR,CHIP 4.7K 1/10W(1608)
R304	1-218-863-11	s	RESISTOR,CHIP 4.7K 1/10W(1608)
R305	1-218-863-11	s	RESISTOR,CHIP 4.7K 1/10W(1608)
R306	1-218-895-11	s	RESISTOR,CHIP 100K 1/10W(1608)
R307	1-218-863-11	s	RESISTOR,CHIP 4.7K 1/10W(1608)
R312	1-216-864-11	s	CONDUCTOR, CHIP (1608)
R313	1-216-864-11	s	CONDUCTOR, CHIP (1608)
R314	1-216-864-11	s	CONDUCTOR, CHIP (1608)
R315	1-216-864-11	s	CONDUCTOR, CHIP (1608)
R316	1-216-864-11	s	CONDUCTOR, CHIP (1608)

(DPR-229/HM/M BOARD [SUFFIX 11-13])

Ref. No. or Q'ty	Part No.	SP	Description
R317	1-218-895-11	s	RESISTOR,CHIP 100K 1/10W(1608)
R318	1-218-895-11	s	RESISTOR,CHIP 100K 1/10W(1608)
R319	1-218-895-11	s	RESISTOR,CHIP 100K 1/10W(1608)
R320	1-218-895-11	s	RESISTOR,CHIP 100K 1/10W(1608)
R321	1-218-895-11	s	RESISTOR,CHIP 100K 1/10W(1608)
R322	1-216-864-11	s	CONDUCTOR, CHIP (1608)
R323	1-216-864-11	s	CONDUCTOR, CHIP (1608)
R324	1-216-864-11	s	CONDUCTOR, CHIP (1608)
R325	1-216-864-11	s	CONDUCTOR, CHIP (1608)
R326	1-216-864-11	s	CONDUCTOR, CHIP (1608)
R327	1-216-864-11	s	CONDUCTOR, CHIP (1608)
R328	1-216-864-11	s	CONDUCTOR, CHIP (1608)
R329	1-216-864-11	s	CONDUCTOR, CHIP (1608)
R330	1-218-895-11	s	RESISTOR,CHIP 100K 1/10W(1608)
R331	1-216-864-11	s	CONDUCTOR, CHIP (1608)
R335	1-216-864-11	s	CONDUCTOR, CHIP (1608)
R338	1-218-863-11	s	RESISTOR,CHIP 4.7K 1/10W(1608)
R349	1-216-864-11	s	CONDUCTOR, CHIP (1608)
R351	1-211-977-11	s	RESISTOR,CHIP 22 1/10W (1608)
R352	1-211-977-11	s	RESISTOR,CHIP 22 1/10W (1608)
R353	1-218-863-11	s	RESISTOR,CHIP 4.7K 1/10W(1608)
R354	1-218-863-11	s	RESISTOR,CHIP 4.7K 1/10W(1608)
R355	1-218-863-11	s	RESISTOR,CHIP 4.7K 1/10W(1608)
R356	1-216-864-11	s	CONDUCTOR, CHIP (1608)
R359	1-211-977-11	s	RESISTOR,CHIP 22 1/10W (1608)
R400	1-218-895-11	s	RESISTOR,CHIP 100K 1/10W(1608)
R402	1-211-985-11	s	RESISTOR,CHIP 47 1/10W (1608)
R403	1-211-985-11	s	RESISTOR,CHIP 47 1/10W (1608)
*F R421	1-218-823-11	s	RESISTOR,CHIP 100 1/10W (1608)
*F R422	1-218-823-11	s	RESISTOR,CHIP 100 1/10W (1608)
*F R423	1-218-823-11	s	RESISTOR,CHIP 100 1/10W (1608)
*F R424	1-218-823-11	s	RESISTOR,CHIP 100 1/10W (1608)
R428	1-218-823-11	s	RESISTOR,CHIP 100 1/10W (1608)
R429	1-218-823-11	s	RESISTOR,CHIP 100 1/10W (1608)
R430	1-218-823-11	s	RESISTOR,CHIP 100 1/10W (1608)
R431	1-218-823-11	s	RESISTOR,CHIP 100 1/10W (1608)
R432	1-211-977-11	s	RESISTOR,CHIP 22 1/10W (1608)
R433	1-211-977-11	s	RESISTOR,CHIP 22 1/10W (1608)
R434	1-211-977-11	s	RESISTOR,CHIP 22 1/10W (1608)
R435	1-216-864-11	s	CONDUCTOR, CHIP (1608)
R436	1-216-864-11	s	CONDUCTOR, CHIP (1608)
R437	1-211-985-11	s	RESISTOR,CHIP 47 1/10W (1608)
R439	1-216-864-11	s	CONDUCTOR, CHIP (1608)
R440	1-218-895-11	s	RESISTOR,CHIP 100K 1/10W(1608)
*F R442	1-211-985-11	s	RESISTOR,CHIP 47 1/10W (1608)
*F R443	1-218-863-11	s	RESISTOR,CHIP 4.7K 1/10W(1608)
*E R502	1-216-864-11	s	CONDUCTOR, CHIP (1608)
*E R503	1-216-864-11	s	CONDUCTOR, CHIP (1608)
R605	1-216-864-11	s	CONDUCTOR, CHIP (1608)
R606	1-216-864-11	s	CONDUCTOR, CHIP (1608)
R607	1-216-864-11	s	CONDUCTOR, CHIP (1608)
R619*A*2	1-218-895-11	s	RESISTOR,CHIP 100K 1/10W(1608)
R650	1-218-847-11	s	RESISTOR, CHIP 1K 1/10W (1608)
R652	1-216-864-11	s	CONDUCTOR, CHIP (1608)
R653	1-216-864-11	s	CONDUCTOR, CHIP (1608)
R654	1-216-864-11	s	CONDUCTOR, CHIP (1608)
R657	1-218-871-11	s	RESISTOR,CHIP 10K 1/10W (1608)
R658	1-216-864-11	s	CONDUCTOR, CHIP (1608)
R659	1-216-864-11	s	CONDUCTOR, CHIP (1608)

(DPR-229/HM/M BOARD [SUFFIX 11-13])

Ref. No. or Q'ty	Part No.	SP	Description
R660	1-216-864-11	s	CONDUCTOR, CHIP (1608)
R661	1-218-903-11	s	RESISTOR,CHIP 220K 1/10W(1608)
R662	1-218-878-11	s	RESISTOR,CHIP 20K 1/10W (1608)
R663	1-218-878-11	s	RESISTOR,CHIP 20K 1/10W (1608)
R666	1-211-990-11	s	RESISTOR,CHIP 75 1/10W (1608)
R668	1-211-990-11	s	RESISTOR,CHIP 75 1/10W (1608)
R670	1-218-903-11	s	RESISTOR,CHIP 220K 1/10W(1608)
R671	1-218-903-11	s	RESISTOR,CHIP 220K 1/10W(1608)
R672	1-218-871-11	s	RESISTOR,CHIP 10K 1/10W (1608)
R673	1-218-856-11	s	RESISTOR,CHIP 2.4K 1/10W(1608)
R674	1-218-871-11	s	RESISTOR,CHIP 10K 1/10W (1608)
*2 R676	1-211-899-11	s	RESISTOR,CHIP 0.221/4W (3225)
R715	1-216-864-11	s	CONDUCTOR, CHIP (1608)
R716	1-216-864-11	s	CONDUCTOR, CHIP (1608)
R717	1-216-864-11	s	CONDUCTOR, CHIP (1608)
R718	1-216-864-11	s	CONDUCTOR, CHIP (1608)
R719	1-216-864-11	s	CONDUCTOR, CHIP (1608)
R720	1-216-864-11	s	CONDUCTOR, CHIP (1608)
R722	1-216-864-11	s	CONDUCTOR, CHIP (1608)
R723	1-216-864-11	s	CONDUCTOR, CHIP (1608)
R724	1-216-864-11	s	CONDUCTOR, CHIP (1608)
R725	1-216-864-11	s	CONDUCTOR, CHIP (1608)
R726	1-216-864-11	s	CONDUCTOR, CHIP (1608)
R727	1-216-864-11	s	CONDUCTOR, CHIP (1608)
R728	1-216-864-11	s	CONDUCTOR, CHIP (1608)
R729	1-216-864-11	s	CONDUCTOR, CHIP (1608)
R738	1-218-847-11	s	RESISTOR, CHIP 1K 1/10W (1608)
R739	1-218-847-11	s	RESISTOR, CHIP 1K 1/10W (1608)
R740	1-218-847-11	s	RESISTOR, CHIP 1K 1/10W (1608)
R748	1-216-864-11	s	CONDUCTOR, CHIP (1608)
R749	1-216-864-11	s	CONDUCTOR, CHIP (1608)
R750	1-216-864-11	s	CONDUCTOR, CHIP (1608)
R751	1-216-864-11	s	CONDUCTOR, CHIP (1608)
R752	1-216-864-11	s	CONDUCTOR, CHIP (1608)
R753	1-216-864-11	s	CONDUCTOR, CHIP (1608)
R755	1-216-864-11	s	CONDUCTOR, CHIP (1608)
R756	1-216-864-11	s	CONDUCTOR, CHIP (1608)
R757	1-216-864-11	s	CONDUCTOR, CHIP (1608)
R758	1-216-864-11	s	CONDUCTOR, CHIP (1608)
R759	1-216-864-11	s	CONDUCTOR, CHIP (1608)
R760	1-216-864-11	s	CONDUCTOR, CHIP (1608)
R761	1-216-864-11	s	CONDUCTOR, CHIP (1608)
R762	1-216-864-11	s	CONDUCTOR, CHIP (1608)
R771	1-218-847-11	s	RESISTOR, CHIP 1K 1/10W (1608)
R772	1-218-847-11	s	RESISTOR, CHIP 1K 1/10W (1608)
R773	1-218-847-11	s	RESISTOR, CHIP 1K 1/10W (1608)
R781	1-216-864-11	s	CONDUCTOR, CHIP (1608)
R782	1-216-864-11	s	CONDUCTOR, CHIP (1608)
R783	1-216-864-11	s	CONDUCTOR, CHIP (1608)
R784	1-216-864-11	s	CONDUCTOR, CHIP (1608)
R785	1-216-864-11	s	CONDUCTOR, CHIP (1608)
R786	1-216-864-11	s	CONDUCTOR, CHIP (1608)
R788	1-216-864-11	s	CONDUCTOR, CHIP (1608)
R789	1-216-864-11	s	CONDUCTOR, CHIP (1608)
R790	1-216-864-11	s	CONDUCTOR, CHIP (1608)
R791	1-216-864-11	s	CONDUCTOR, CHIP (1608)
R792	1-216-864-11	s	CONDUCTOR, CHIP (1608)
R793	1-216-864-11	s	CONDUCTOR, CHIP (1608)
R794	1-216-864-11	s	CONDUCTOR, CHIP (1608)

(DPR-229/HM/M BOARD [SUFFIX 11-13])

Ref. No. or Q'ty	Part No.	SP	Description
R795	1-216-864-11	s	CONDUCTOR, CHIP (1608)
R801	1-216-864-11	s	CONDUCTOR, CHIP (1608)
R802	1-216-864-11	s	CONDUCTOR, CHIP (1608)
R803	1-218-863-11	s	RESISTOR,CHIP 4.7K 1/10W(1608)
R805	1-218-863-11	s	RESISTOR,CHIP 4.7K 1/10W(1608)
R811	1-216-864-11	s	CONDUCTOR, CHIP (1608)
R813	1-218-831-11	s	RESISTOR, CHIP 220 1/10W(1608)
R814	1-218-831-11	s	RESISTOR, CHIP 220 1/10W(1608)
R815	1-218-831-11	s	RESISTOR, CHIP 220 1/10W(1608)
R820	1-211-977-11	s	RESISTOR,CHIP 22 1/10W (1608)
R822	1-211-977-11	s	RESISTOR,CHIP 22 1/10W (1608)
R823	1-211-977-11	s	RESISTOR,CHIP 22 1/10W (1608)
R824	1-211-977-11	s	RESISTOR,CHIP 22 1/10W (1608)
R825	1-211-977-11	s	RESISTOR,CHIP 22 1/10W (1608)
R826	1-211-977-11	s	RESISTOR,CHIP 22 1/10W (1608)
R827	1-211-977-11	s	RESISTOR,CHIP 22 1/10W (1608)
R828	1-211-977-11	s	RESISTOR,CHIP 22 1/10W (1608)
R831	1-211-977-11	s	RESISTOR,CHIP 22 1/10W (1608)
R834	1-218-895-11	s	RESISTOR,CHIP 100K 1/10W(1608)
R835	1-218-895-11	s	RESISTOR,CHIP 100K 1/10W(1608)
R839	1-216-864-11	s	CONDUCTOR, CHIP (1608)
R841	1-211-977-11	s	RESISTOR,CHIP 22 1/10W (1608)
R854	1-211-977-11	s	RESISTOR,CHIP 22 1/10W (1608)
R855	1-211-977-11	s	RESISTOR,CHIP 22 1/10W (1608)
R856	1-211-977-11	s	RESISTOR,CHIP 22 1/10W (1608)
R857	1-211-977-11	s	RESISTOR,CHIP 22 1/10W (1608)
R858	1-211-977-11	s	RESISTOR,CHIP 22 1/10W (1608)
R859	1-211-977-11	s	RESISTOR,CHIP 22 1/10W (1608)
R860	1-211-977-11	s	RESISTOR,CHIP 22 1/10W (1608)
R861	1-211-977-11	s	RESISTOR,CHIP 22 1/10W (1608)
R862	1-211-977-11	s	RESISTOR,CHIP 22 1/10W (1608)
R863	1-218-871-11	s	RESISTOR,CHIP 10K 1/10W (1608)
R864	1-218-847-11	s	RESISTOR, CHIP 1K 1/10W (1608)
R865	1-218-847-11	s	RESISTOR, CHIP 1K 1/10W (1608)
R866	1-218-835-11	s	RESISTOR,CHIP 330 1/10W (1608)
R867	1-218-835-11	s	RESISTOR,CHIP 330 1/10W (1608)
R903	1-218-849-11	s	RESISTOR,CHIP 1.2K 1/10W(1608)
R904	1-218-847-11	s	RESISTOR, CHIP 1K 1/10W (1608)
R905	1-216-864-11	s	CONDUCTOR, CHIP (1608)
R906	1-216-864-11	s	CONDUCTOR, CHIP (1608)
R907	1-216-864-11	s	CONDUCTOR, CHIP (1608)
R908	1-216-864-11	s	CONDUCTOR, CHIP (1608)
R909	1-218-895-11	s	RESISTOR,CHIP 100K 1/10W(1608)
R911	1-218-871-11	s	RESISTOR,CHIP 10K 1/10W (1608)
R912	1-218-835-11	s	RESISTOR,CHIP 330 1/10W (1608)
R913	1-216-864-11	s	CONDUCTOR, CHIP (1608)
R914	1-216-864-11	s	CONDUCTOR, CHIP (1608)
R915	1-218-895-11	s	RESISTOR,CHIP 100K 1/10W(1608)
R1004	1-218-847-11	s	RESISTOR, CHIP 1K 1/10W (1608)
R1005	1-218-847-11	s	RESISTOR, CHIP 1K 1/10W (1608)
R1006	1-218-847-11	s	RESISTOR, CHIP 1K 1/10W (1608)
R1014	1-216-864-11	s	CONDUCTOR, CHIP (1608)
R1015	1-216-864-11	s	CONDUCTOR, CHIP (1608)
R1016	1-216-864-11	s	CONDUCTOR, CHIP (1608)
R1017	1-216-864-11	s	CONDUCTOR, CHIP (1608)
R1018	1-216-864-11	s	CONDUCTOR, CHIP (1608)
R1019	1-216-864-11	s	CONDUCTOR, CHIP (1608)
R1021	1-216-864-11	s	CONDUCTOR, CHIP (1608)
R1022	1-216-864-11	s	CONDUCTOR, CHIP (1608)

(DPR-229/HM/M BOARD [SUFFIX 11-13])

Ref. No. or Q'ty	Part No.	SP	Description
R1023	1-216-864-11	s	CONDUCTOR, CHIP (1608)
R1024	1-216-864-11	s	CONDUCTOR, CHIP (1608)
R1025	1-216-864-11	s	CONDUCTOR, CHIP (1608)
R1026	1-216-864-11	s	CONDUCTOR, CHIP (1608)
R1027	1-216-864-11	s	CONDUCTOR, CHIP (1608)
R1028	1-216-864-11	s	CONDUCTOR, CHIP (1608)
R1037	1-216-864-11	s	CONDUCTOR, CHIP (1608)
R1038	1-216-864-11	s	CONDUCTOR, CHIP (1608)
R1039	1-216-864-11	s	CONDUCTOR, CHIP (1608)
R1040	1-216-864-11	s	CONDUCTOR, CHIP (1608)
R1042	1-218-847-11	s	RESISTOR, CHIP 1K 1/10W (1608)
R1043	1-218-847-11	s	RESISTOR, CHIP 1K 1/10W (1608)
R1044	1-218-847-11	s	RESISTOR, CHIP 1K 1/10W (1608)
R1052	1-218-895-11	s	RESISTOR,CHIP 100K 1/10W(1608)
R1053	1-218-895-11	s	RESISTOR,CHIP 100K 1/10W(1608)
R1054	1-216-864-11	s	CONDUCTOR, CHIP (1608)
R1055	1-216-864-11	s	CONDUCTOR, CHIP (1608)
R1056	1-216-864-11	s	CONDUCTOR, CHIP (1608)
RB100	1-233-810-21	s	RES, NETWORK 100K (3216)
RB101	1-233-810-21	s	RES, NETWORK 100K (3216)
RB102	1-239-409-11	s	RESISTOR NETWORK 47 (1608)
RB103	1-239-409-11	s	RESISTOR NETWORK 47 (1608)
RB104	1-233-810-21	s	RES, NETWORK 100K (3216)
RB106	1-234-397-11	s	NETWORK, RES (8 GANG) 100K
RB107	1-234-397-11	s	NETWORK, RES (8 GANG) 100K
RB108	1-233-575-11	s	RES, CHIP NETWORK 22
RB109	1-233-575-11	s	RES, CHIP NETWORK 22
RB110	1-233-575-11	s	RES, CHIP NETWORK 22
RB111	1-233-575-11	s	RES, CHIP NETWORK 22
RB112	1-233-575-11	s	RES, CHIP NETWORK 22
RB113	1-234-397-11	s	NETWORK, RES (8 GANG) 100K
RB114	1-233-576-11	s	RESISTOR,CHIP NETWORK 100
RB115	1-233-576-11	s	RESISTOR,CHIP NETWORK 100
RB116	1-233-810-21	s	RES, NETWORK 100K (3216)
RB117	1-234-397-11	s	NETWORK, RES (8 GANG) 100K
RB118	1-234-397-11	s	NETWORK, RES (8 GANG) 100K
RB119	1-234-397-11	s	NETWORK, RES (8 GANG) 100K
RB120	1-234-397-11	s	NETWORK, RES (8 GANG) 100K
RB121	1-233-576-11	s	RESISTOR,CHIP NETWORK 100
RB122	1-233-576-11	s	RESISTOR,CHIP NETWORK 100
RB123	1-234-397-11	s	NETWORK, RES (8 GANG) 100K
RB200	1-233-411-11	s	RESISTOR,CHIP NETWORK 220/3216
RB201	1-233-411-11	s	RESISTOR,CHIP NETWORK 220/3216
RB202	1-233-411-11	s	RESISTOR,CHIP NETWORK 220/3216
RB203	1-233-411-11	s	RESISTOR,CHIP NETWORK 220/3216
RB204	1-233-411-11	s	RESISTOR,CHIP NETWORK 220/3216
RB205	1-233-575-11	s	RES, CHIP NETWORK 22
RB206	1-233-575-11	s	RES, CHIP NETWORK 22
RB213 *H	1-239-409-11	s	RESISTOR NETWORK 47 (1608)
RB214 *H	1-239-409-11	s	RESISTOR NETWORK 47 (1608)
RB215 *H	1-239-409-11	s	RESISTOR NETWORK 47 (1608)
RB216 *H	1-239-409-11	s	RESISTOR NETWORK 47 (1608)
RB217 *H	1-239-409-11	s	RESISTOR NETWORK 47 (1608)
RB218 *H	1-239-409-11	s	RESISTOR NETWORK 47 (1608)
RB400 *F	1-239-409-11	s	RESISTOR NETWORK 47 (1608)
RB401 *F	1-239-409-11	s	RESISTOR NETWORK 47 (1608)
RB402 *F	1-239-409-11	s	RESISTOR NETWORK 47 (1608)
RB403 *F	1-239-409-11	s	RESISTOR NETWORK 47 (1608)

(DPR-229/HM/M BOARD [SUFFIX 11-13])

Ref. No. or Q'ty	Part No.	SP	Description
RB404	*F 1-239-409-11	s	RESISTOR NETWORK 47 (1608)
RB500	*E 1-233-414-11	s	RESISTOR,CHIP NETWORK 4.7K
RB501	*E 1-233-412-11	s	RESISTOR,CHIP NETWORK 1K
RB502	*E 1-233-412-11	s	RESISTOR,CHIP NETWORK 1K
RB503	*E 1-233-412-11	s	RESISTOR,CHIP NETWORK 1K
RB504	*E 1-233-412-11	s	RESISTOR,CHIP NETWORK 1K
RB505	*E 1-233-412-11	s	RESISTOR,CHIP NETWORK 1K
RB506	*E 1-233-412-11	s	RESISTOR,CHIP NETWORK 1K
RB507	*E 1-233-412-11	s	RESISTOR,CHIP NETWORK 1K
RB508	*E 1-233-412-11	s	RESISTOR,CHIP NETWORK 1K
RB509	*E 1-233-412-11	s	RESISTOR,CHIP NETWORK 1K
RB510	*E 1-233-412-11	s	RESISTOR,CHIP NETWORK 1K
RB511	*E 1-233-412-11	s	RESISTOR,CHIP NETWORK 1K
RB512	*E 1-233-412-11	s	RESISTOR,CHIP NETWORK 1K
RB513	*E 1-233-412-11	s	RESISTOR,CHIP NETWORK 1K
RB514	*E 1-233-412-11	s	RESISTOR,CHIP NETWORK 1K
RB515	*E 1-233-412-11	s	RESISTOR,CHIP NETWORK 1K
RB516	*E 1-234-523-21	s	RESISTOR,CHIP NETWORK
RB517	*E 1-234-523-21	s	RESISTOR,CHIP NETWORK
RB518	*E 1-234-523-21	s	RESISTOR,CHIP NETWORK
RB600	1-234-523-21	s	RESISTOR,CHIP NETWORK
RB601	1-234-523-21	s	RESISTOR,CHIP NETWORK
RB602	1-234-523-21	s	RESISTOR,CHIP NETWORK
RB700	1-233-810-21	s	RES, NETWORK 100K (3216)
RB701	1-233-810-21	s	RES, NETWORK 100K (3216)
RB702	1-233-810-21	s	RES, NETWORK 100K (3216)
RB703	1-233-810-21	s	RES, NETWORK 100K (3216)
RB704	1-233-810-21	s	RES, NETWORK 100K (3216)
RB705	1-233-810-21	s	RES, NETWORK 100K (3216)
RB706	1-233-810-21	s	RES, NETWORK 100K (3216)
RB707	1-233-810-21	s	RES, NETWORK 100K (3216)
RB708	1-233-810-21	s	RES, NETWORK 100K (3216)
RB709	1-234-397-11	s	NETWORK, RES (8 GANG) 100K
RB710	1-234-397-11	s	NETWORK, RES (8 GANG) 100K
RB711	1-234-397-11	s	NETWORK, RES (8 GANG) 100K
RB712	1-234-397-11	s	NETWORK, RES (8 GANG) 100K
RB801	1-233-810-21	s	RES, NETWORK 100K (3216)
RB804	1-233-411-11	s	RESISTOR,CHIP NETWORK 220/3216
RB805	1-233-411-11	s	RESISTOR,CHIP NETWORK 220/3216
RB806	1-233-411-11	s	RESISTOR,CHIP NETWORK 220/3216
RB807	1-233-414-11	s	RESISTOR,CHIP NETWORK 4.7K
RB808	1-239-409-11	s	RESISTOR NETWORK 47 (1608)
RB809	1-239-409-11	s	RESISTOR NETWORK 47 (1608)
RB810	1-239-409-11	s	RESISTOR NETWORK 47 (1608)
RB811	1-239-409-11	s	RESISTOR NETWORK 47 (1608)
RB812	1-239-409-11	s	RESISTOR NETWORK 47 (1608)
RB813	1-233-810-21	s	RES, NETWORK 100K (3216)
RB814	1-233-810-21	s	RES, NETWORK 100K (3216)
RB815	1-233-810-21	s	RES, NETWORK 100K (3216)
RB816	1-233-810-21	s	RES, NETWORK 100K (3216)
RB817	1-233-414-11	s	RESISTOR,CHIP NETWORK 4.7K
RB818	1-236-908-11	s	RESISTOR,NETWORK 10K (3216)
X200	1-781-809-21	s	OSCILLATOR, CRYSTAL (SMD)

DPR-229 BOARD [SUFFIX 14-]

[Lot No. 561 -] MSW-A2000/P

Ref. No. or Q'ty	Part No.	SP	Description
1pc	A-8346-095-A	s	MOUNTED CIRCUIT BOARD, DPR-229
1pc	3-179-084-11	s	LEVER (R), C BOARD
1pc	3-179-085-11	s	LEVER (L), C BOARD
C100	1-131-992-11	s	CAP, CERAMIC 100000PF F 1608
C101	1-131-992-11	s	CAP, CERAMIC 100000PF F 1608
C102	1-162-927-11	s	CAPACITOR,CERAMIC 100PF/50V CH
C103	1-126-394-11	s	CAPACITOR,ELECT 10MF/16V(CHIP)
C104	1-131-992-11	s	CAP, CERAMIC 100000PF F 1608
C105	1-131-992-11	s	CAP, CERAMIC 100000PF F 1608
C106	1-131-992-11	s	CAP, CERAMIC 100000PF F 1608
C107	1-131-992-11	s	CAP, CERAMIC 100000PF F 1608
C108	1-131-992-11	s	CAP, CERAMIC 100000PF F 1608
C109	1-131-992-11	s	CAP, CERAMIC 100000PF F 1608
C110	1-131-992-11	s	CAP, CERAMIC 100000PF F 1608
C111	1-131-992-11	s	CAP, CERAMIC 100000PF F 1608
C112	1-131-992-11	s	CAP, CERAMIC 100000PF F 1608
C113	1-131-992-11	s	CAP, CERAMIC 100000PF F 1608
C114	1-131-992-11	s	CAP, CERAMIC 100000PF F 1608
C115	1-131-992-11	s	CAP, CERAMIC 100000PF F 1608
C116	1-131-992-11	s	CAP, CERAMIC 100000PF F 1608
C117	1-131-992-11	s	CAP, CERAMIC 100000PF F 1608
C118	1-131-992-11	s	CAP, CERAMIC 100000PF F 1608
C119	1-131-992-11	s	CAP, CERAMIC 100000PF F 1608
C120	1-131-992-11	s	CAP, CERAMIC 100000PF F 1608
C121	1-131-992-11	s	CAP, CERAMIC 100000PF F 1608
C122	1-131-992-11	s	CAP, CERAMIC 100000PF F 1608
C123	1-131-992-11	s	CAP, CERAMIC 100000PF F 1608
C124	1-131-992-11	s	CAP, CERAMIC 100000PF F 1608
C125	1-131-992-11	s	CAP, CERAMIC 100000PF F 1608
C126	1-131-992-11	s	CAP, CERAMIC 100000PF F 1608
C127	1-131-992-11	s	CAP, CERAMIC 100000PF F 1608
C200	1-126-394-11	s	CAPACITOR,ELECT 10MF/16V(CHIP)
C201	1-131-992-11	s	CAP, CERAMIC 100000PF F 1608
C202	1-131-992-11	s	CAP, CERAMIC 100000PF F 1608
C203	1-131-992-11	s	CAP, CERAMIC 100000PF F 1608
C204	1-126-394-11	s	CAPACITOR,ELECT 10MF/16V(CHIP)
C205	1-131-992-11	s	CAP, CERAMIC 100000PF F 1608
C206	1-131-992-11	s	CAP, CERAMIC 100000PF F 1608
C207	1-126-394-11	s	CAPACITOR,ELECT 10MF/16V(CHIP)
C208	1-131-992-11	s	CAP, CERAMIC 100000PF F 1608
C209	1-131-992-11	s	CAP, CERAMIC 100000PF F 1608
C210	1-131-992-11	s	CAP, CERAMIC 100000PF F 1608
C211	1-127-692-91	s	CAP, CHIP CERAMIC 10MF B 3216
C212	1-127-692-91	s	CAP, CHIP CERAMIC 10MF B 3216
C213	1-131-992-11	s	CAP, CERAMIC 100000PF F 1608
C214	1-131-992-11	s	CAP, CERAMIC 100000PF F 1608
C215	1-131-992-11	s	CAP, CERAMIC 100000PF F 1608
C216	1-131-992-11	s	CAP, CERAMIC 100000PF F 1608
C217	1-131-992-11	s	CAP, CERAMIC 100000PF F 1608
C218	1-131-992-11	s	CAP, CERAMIC 100000PF F 1608
C219	1-131-992-11	s	CAP, CERAMIC 100000PF F 1608
C220	1-131-992-11	s	CAP, CERAMIC 100000PF F 1608
C221	1-131-992-11	s	CAP, CERAMIC 100000PF F 1608
C222	1-131-992-11	s	CAP, CERAMIC 100000PF F 1608
C223	1-131-992-11	s	CAP, CERAMIC 100000PF F 1608
C224	1-131-992-11	s	CAP, CERAMIC 100000PF F 1608
C225	1-131-992-11	s	CAP, CERAMIC 100000PF F 1608

(DPR-229 BOARD [SUFFIX 14-])

Ref. No. or Q'ty	Part No.	SP	Description
C226	1-131-992-11	s	CAP, CERAMIC 100000PF F 1608
C227	1-131-992-11	s	CAP, CERAMIC 100000PF F 1608
C228	1-131-992-11	s	CAP, CERAMIC 100000PF F 1608
C234	1-131-992-11	s	CAP, CERAMIC 100000PF F 1608
C235	1-131-992-11	s	CAP, CERAMIC 100000PF F 1608
C300	1-131-992-11	s	CAP, CERAMIC 100000PF F 1608
C301	1-131-992-11	s	CAP, CERAMIC 100000PF F 1608
C302	1-131-992-11	s	CAP, CERAMIC 100000PF F 1608
C303	1-131-992-11	s	CAP, CERAMIC 100000PF F 1608
C304	1-126-394-11	s	CAPACITOR,ELECT 10MF/16V(CHIP)
C305	1-131-992-11	s	CAP, CERAMIC 100000PF F 1608
C306	1-131-992-11	s	CAP, CERAMIC 100000PF F 1608
C307	1-131-992-11	s	CAP, CERAMIC 100000PF F 1608
C308	1-131-992-11	s	CAP, CERAMIC 100000PF F 1608
C309	1-131-992-11	s	CAP, CERAMIC 100000PF F 1608
C310	1-131-992-11	s	CAP, CERAMIC 100000PF F 1608
C311	1-131-992-11	s	CAP, CERAMIC 100000PF F 1608
C312	1-131-992-11	s	CAP, CERAMIC 100000PF F 1608
C313	1-131-992-11	s	CAP, CERAMIC 100000PF F 1608
C314	1-126-394-11	s	CAPACITOR,ELECT 10MF/16V(CHIP)
C315	1-131-992-11	s	CAP, CERAMIC 100000PF F 1608
C316	1-131-992-11	s	CAP, CERAMIC 100000PF F 1608
C320	1-131-992-11	s	CAP, CERAMIC 100000PF F 1608
C321	1-131-992-11	s	CAP, CERAMIC 100000PF F 1608
C322	1-131-992-11	s	CAP, CERAMIC 100000PF F 1608
C323	1-131-992-11	s	CAP, CERAMIC 100000PF F 1608
C324	1-131-992-11	s	CAP, CERAMIC 100000PF F 1608
C325	1-131-992-11	s	CAP, CERAMIC 100000PF F 1608
C326	1-131-992-11	s	CAP, CERAMIC 100000PF F 1608
C327	1-131-992-11	s	CAP, CERAMIC 100000PF F 1608
C328	1-131-992-11	s	CAP, CERAMIC 100000PF F 1608
C329	1-131-992-11	s	CAP, CERAMIC 100000PF F 1608
C330	1-131-992-11	s	CAP, CERAMIC 100000PF F 1608
C331	1-126-394-11	s	CAPACITOR,ELECT 10MF/16V(CHIP)
C332	1-131-992-11	s	CAP, CERAMIC 100000PF F 1608
C333	1-131-992-11	s	CAP, CERAMIC 100000PF F 1608
C334	1-131-992-11	s	CAP, CERAMIC 100000PF F 1608
C335	1-131-992-11	s	CAP, CERAMIC 100000PF F 1608
C336	1-131-992-11	s	CAP, CERAMIC 100000PF F 1608
C337	1-131-992-11	s	CAP, CERAMIC 100000PF F 1608
C338	1-131-992-11	s	CAP, CERAMIC 100000PF F 1608
C339	1-131-992-11	s	CAP, CERAMIC 100000PF F 1608
C404	1-131-992-11	s	CAP, CERAMIC 100000PF F 1608
C412	1-126-394-11	s	CAPACITOR,ELECT 10MF/16V(CHIP)
C413	1-131-992-11	s	CAP, CERAMIC 100000PF F 1608
C415	1-131-992-11	s	CAP, CERAMIC 100000PF F 1608
C417	1-131-992-11	s	CAP, CERAMIC 100000PF F 1608
C418	1-126-394-11	s	CAPACITOR,ELECT 10MF/16V(CHIP)
C419	1-131-992-11	s	CAP, CERAMIC 100000PF F 1608
C420	1-131-992-11	s	CAP, CERAMIC 100000PF F 1608
C421	1-131-992-11	s	CAP, CERAMIC 100000PF F 1608
C422	1-131-992-11	s	CAP, CERAMIC 100000PF F 1608
C423	1-131-992-11	s	CAP, CERAMIC 100000PF F 1608
C424	1-131-992-11	s	CAP, CERAMIC 100000PF F 1608
C425	1-131-992-11	s	CAP, CERAMIC 100000PF F 1608
C426	1-131-992-11	s	CAP, CERAMIC 100000PF F 1608
C427	1-131-992-11	s	CAP, CERAMIC 100000PF F 1608
C428	1-131-992-11	s	CAP, CERAMIC 100000PF F 1608
C429	1-131-992-11	s	CAP, CERAMIC 100000PF F 1608

(DPR-229 BOARD [SUFFIX 14-])

Ref. No. or Q'ty	Part No.	SP	Description
C430	1-131-992-11	s	CAP, CERAMIC 100000PF F 1608
C431	1-131-992-11	s	CAP, CERAMIC 100000PF F 1608
C432	1-131-992-11	s	CAP, CERAMIC 100000PF F 1608
C433	1-126-394-11	s	CAPACITOR,ELECT 10MF/16V(CHIP)
C434	1-126-394-11	s	CAPACITOR,ELECT 10MF/16V(CHIP)
C435	1-131-992-11	s	CAP, CERAMIC 100000PF F 1608
C437	1-131-992-11	s	CAP, CERAMIC 100000PF F 1608
C439	1-131-992-11	s	CAP, CERAMIC 100000PF F 1608
C440	1-131-992-11	s	CAP, CERAMIC 100000PF F 1608
C606	1-131-992-11	s	CAP, CERAMIC 100000PF F 1608
C607	1-126-394-11	s	CAPACITOR,ELECT 10MF/16V(CHIP)
C608	1-131-992-11	s	CAP, CERAMIC 100000PF F 1608
C609	1-131-992-11	s	CAP, CERAMIC 100000PF F 1608
C650	1-162-970-11	s	CAPACITOR CERAMIC 0.01MF/25V B
C651	1-162-970-11	s	CAPACITOR CERAMIC 0.01MF/25V B
C652	1-131-992-11	s	CAP, CERAMIC 100000PF F 1608
C653	1-131-992-11	s	CAP, CERAMIC 100000PF F 1608
C654	1-126-394-11	s	CAPACITOR,ELECT 10MF/16V(CHIP)
C655	1-131-992-11	s	CAP, CERAMIC 100000PF F 1608
C656	1-131-992-11	s	CAP, CERAMIC 100000PF F 1608
C657	1-131-992-11	s	CAP, CERAMIC 100000PF F 1608
C658	1-131-992-11	s	CAP, CERAMIC 100000PF F 1608
C659	1-131-992-11	s	CAP, CERAMIC 100000PF F 1608
C660	1-131-992-11	s	CAP, CERAMIC 100000PF F 1608
C661	1-131-992-11	s	CAP, CERAMIC 100000PF F 1608
C662	1-131-992-11	s	CAP, CERAMIC 100000PF F 1608
C663	1-126-394-11	s	CAPACITOR,ELECT 10MF/16V(CHIP)
C664	1-165-870-21	s	CAPACITOR, ELECT 100MF(6.3X6)
C665	1-126-394-11	s	CAPACITOR,ELECT 10MF/16V(CHIP)
C666	1-131-992-11	s	CAP, CERAMIC 100000PF F 1608
C667	1-131-992-11	s	CAP, CERAMIC 100000PF F 1608
C668	1-131-992-11	s	CAP, CERAMIC 100000PF F 1608
C669	1-131-992-11	s	CAP, CERAMIC 100000PF F 1608
C670	1-131-992-11	s	CAP, CERAMIC 100000PF F 1608
C671	1-131-992-11	s	CAP, CERAMIC 100000PF F 1608
C672	1-131-992-11	s	CAP, CERAMIC 100000PF F 1608
C673	1-131-992-11	s	CAP, CERAMIC 100000PF F 1608
C674	1-131-992-11	s	CAP, CERAMIC 100000PF F 1608
C675	1-131-992-11	s	CAP, CERAMIC 100000PF F 1608
C676	1-131-992-11	s	CAP, CERAMIC 100000PF F 1608
C677	1-131-992-11	s	CAP, CERAMIC 100000PF F 1608
C678	1-131-992-11	s	CAP, CERAMIC 100000PF F 1608
C679	1-131-992-11	s	CAP, CERAMIC 100000PF F 1608
C680	1-131-992-11	s	CAP, CERAMIC 100000PF F 1608
C681	1-131-992-11	s	CAP, CERAMIC 100000PF F 1608
C682	1-131-992-11	s	CAP, CERAMIC 100000PF F 1608
C683	1-131-992-11	s	CAP, CERAMIC 100000PF F 1608
C684	1-131-992-11	s	CAP, CERAMIC 100000PF F 1608
C685	1-162-925-11	s	CAPACITOR,CERAMIC 68PF/50V CH
C686	1-165-872-21	s	CAPACITOR,SOLID ELECT 47MF
C687	1-126-394-11	s	CAPACITOR,ELECT 10MF/16V(CHIP)
C688	1-126-394-11	s	CAPACITOR,ELECT 10MF/16V(CHIP)
C689	1-131-992-11	s	CAP, CERAMIC 100000PF F 1608
C690	1-131-992-11	s	CAP, CERAMIC 100000PF F 1608
C700	1-131-992-11	s	CAP, CERAMIC 100000PF F 1608
C701	1-113-503-11	s	CAPACITOR,CERAMIC 3900PF CH
C702	1-162-968-11	s	CAPACITOR,CERAMIC 4700PF/50V B
C703	1-131-992-11	s	CAP, CERAMIC 100000PF F 1608
C704	1-131-992-11	s	CAP, CERAMIC 100000PF F 1608

(DPR-229 BOARD [SUFFIX 14-])

Ref. No. or Q'ty	Part No.	SP	Description
C705	1-131-992-11	s	CAP, CERAMIC 100000PF F 1608
C706	1-131-992-11	s	CAP, CERAMIC 100000PF F 1608
C707	1-131-992-11	s	CAP, CERAMIC 100000PF F 1608
C708	1-131-992-11	s	CAP, CERAMIC 100000PF F 1608
C709	1-131-992-11	s	CAP, CERAMIC 100000PF F 1608
C710	1-131-992-11	s	CAP, CERAMIC 100000PF F 1608
C711	1-131-992-11	s	CAP, CERAMIC 100000PF F 1608
C712	1-131-992-11	s	CAP, CERAMIC 100000PF F 1608
C713	1-113-503-11	s	CAPACITOR,CERAMIC 3900PF CH
C714	1-162-968-11	s	CAPACITOR,CERAMIC 4700PF/50V B
C715	1-131-992-11	s	CAP, CERAMIC 100000PF F 1608
C716	1-131-992-11	s	CAP, CERAMIC 100000PF F 1608
C717	1-131-992-11	s	CAP, CERAMIC 100000PF F 1608
C718	1-131-992-11	s	CAP, CERAMIC 100000PF F 1608
C719	1-131-992-11	s	CAP, CERAMIC 100000PF F 1608
C720	1-131-992-11	s	CAP, CERAMIC 100000PF F 1608
C721	1-131-992-11	s	CAP, CERAMIC 100000PF F 1608
C722	1-131-992-11	s	CAP, CERAMIC 100000PF F 1608
C723	1-131-992-11	s	CAP, CERAMIC 100000PF F 1608
C724	1-131-992-11	s	CAP, CERAMIC 100000PF F 1608
C725	1-113-503-11	s	CAPACITOR,CERAMIC 3900PF CH
C726	1-162-968-11	s	CAPACITOR,CERAMIC 4700PF/50V B
C727	1-131-992-11	s	CAP, CERAMIC 100000PF F 1608
C728	1-131-992-11	s	CAP, CERAMIC 100000PF F 1608
C729	1-131-992-11	s	CAP, CERAMIC 100000PF F 1608
C730	1-131-992-11	s	CAP, CERAMIC 100000PF F 1608
C731	1-131-992-11	s	CAP, CERAMIC 100000PF F 1608
C732	1-131-992-11	s	CAP, CERAMIC 100000PF F 1608
C733	1-131-992-11	s	CAP, CERAMIC 100000PF F 1608
C734	1-131-992-11	s	CAP, CERAMIC 100000PF F 1608
C735	1-131-992-11	s	CAP, CERAMIC 100000PF F 1608
C736	1-131-992-11	s	CAP, CERAMIC 100000PF F 1608
C737	1-113-503-11	s	CAPACITOR,CERAMIC 3900PF CH
C738	1-162-968-11	s	CAPACITOR,CERAMIC 4700PF/50V B
C739	1-131-992-11	s	CAP, CERAMIC 100000PF F 1608
C740	1-131-992-11	s	CAP, CERAMIC 100000PF F 1608
C741	1-131-992-11	s	CAP, CERAMIC 100000PF F 1608
C742	1-131-992-11	s	CAP, CERAMIC 100000PF F 1608
C743	1-131-992-11	s	CAP, CERAMIC 100000PF F 1608
C744	1-131-992-11	s	CAP, CERAMIC 100000PF F 1608
C745	1-131-992-11	s	CAP, CERAMIC 100000PF F 1608
C746	1-131-992-11	s	CAP, CERAMIC 100000PF F 1608
C747	1-131-992-11	s	CAP, CERAMIC 100000PF F 1608
C748	1-131-992-11	s	CAP, CERAMIC 100000PF F 1608
C800	1-126-394-11	s	CAPACITOR,ELECT 10MF/16V(CHIP)
C801	1-131-992-11	s	CAP, CERAMIC 100000PF F 1608
C802	1-131-992-11	s	CAP, CERAMIC 100000PF F 1608
C803	1-131-992-11	s	CAP, CERAMIC 100000PF F 1608
C804	1-131-992-11	s	CAP, CERAMIC 100000PF F 1608
C810	1-131-992-11	s	CAP, CERAMIC 100000PF F 1608
C811	1-131-992-11	s	CAP, CERAMIC 100000PF F 1608
C812	1-128-590-11	s	CAPACITOR ELECT 100MF/6.3V(105
C813	1-128-590-11	s	CAPACITOR ELECT 100MF/6.3V(105
C814	1-131-992-11	s	CAP, CERAMIC 100000PF F 1608
C815	1-131-992-11	s	CAP, CERAMIC 100000PF F 1608
C816	1-131-992-11	s	CAP, CERAMIC 100000PF F 1608
C817	1-131-992-11	s	CAP, CERAMIC 100000PF F 1608
C818	1-131-992-11	s	CAP, CERAMIC 100000PF F 1608
C819	1-128-590-11	s	CAPACITOR ELECT 100MF/6.3V(105

(DPR-229 BOARD [SUFFIX 14-])

Ref. No. or Q'ty	Part No.	SP	Description
C820	1-128-590-11	s	CAPACITOR ELECT 100MF/6.3V(105
C821	1-128-590-11	s	CAPACITOR ELECT 100MF/6.3V(105
C822	1-128-590-11	s	CAPACITOR ELECT 100MF/6.3V(105
C823	1-131-992-11	s	CAP, CERAMIC 100000PF F 1608
C827	1-131-992-11	s	CAP, CERAMIC 100000PF F 1608
C829	1-131-992-11	s	CAP, CERAMIC 100000PF F 1608
C831	1-131-992-11	s	CAP, CERAMIC 100000PF F 1608
C832	1-131-992-11	s	CAP, CERAMIC 100000PF F 1608
C833	1-131-992-11	s	CAP, CERAMIC 100000PF F 1608
C834	1-131-992-11	s	CAP, CERAMIC 100000PF F 1608
C835	1-131-992-11	s	CAP, CERAMIC 100000PF F 1608
C837	1-131-992-11	s	CAP, CERAMIC 100000PF F 1608
C838	1-131-992-11	s	CAP, CERAMIC 100000PF F 1608
C839	1-126-394-11	s	CAPACITOR,ELECT 10MF/16V(CHIP)
C842	1-131-992-11	s	CAP, CERAMIC 100000PF F 1608
C843	1-131-992-11	s	CAP, CERAMIC 100000PF F 1608
C844	1-131-992-11	s	CAP, CERAMIC 100000PF F 1608
C845	1-131-992-11	s	CAP, CERAMIC 100000PF F 1608
C846	1-131-992-11	s	CAP, CERAMIC 100000PF F 1608
C847	1-131-992-11	s	CAP, CERAMIC 100000PF F 1608
C848	1-126-394-11	s	CAPACITOR,ELECT 10MF/16V(CHIP)
C849	1-126-394-11	s	CAPACITOR,ELECT 10MF/16V(CHIP)
C850	1-131-992-11	s	CAP, CERAMIC 100000PF F 1608
C851	1-131-992-11	s	CAP, CERAMIC 100000PF F 1608
C852	1-131-992-11	s	CAP, CERAMIC 100000PF F 1608
C853	1-126-394-11	s	CAPACITOR,ELECT 10MF/16V(CHIP)
C862	1-131-992-11	s	CAP, CERAMIC 100000PF F 1608
C863	1-131-992-11	s	CAP, CERAMIC 100000PF F 1608
C864	1-131-992-11	s	CAP, CERAMIC 100000PF F 1608
C865	1-131-992-11	s	CAP, CERAMIC 100000PF F 1608
C867	1-127-861-11	s	CAP, CERAMIC 2.2MF B (3216)
C868	1-127-861-11	s	CAP, CERAMIC 2.2MF B (3216)
C869	1-131-992-11	s	CAP, CERAMIC 100000PF F 1608
C912	1-131-992-11	s	CAP, CERAMIC 100000PF F 1608
C913	1-126-394-11	s	CAPACITOR,ELECT 10MF/16V(CHIP)
C914	1-126-394-11	s	CAPACITOR,ELECT 10MF/16V(CHIP)
C915	1-131-992-11	s	CAP, CERAMIC 100000PF F 1608
C916	1-131-992-11	s	CAP, CERAMIC 100000PF F 1608
C917	1-131-992-11	s	CAP, CERAMIC 100000PF F 1608
C918	1-131-992-11	s	CAP, CERAMIC 100000PF F 1608
C919	1-131-992-11	s	CAP, CERAMIC 100000PF F 1608
C920	1-131-992-11	s	CAP, CERAMIC 100000PF F 1608
C921	1-131-992-11	s	CAP, CERAMIC 100000PF F 1608
C922	1-131-992-11	s	CAP, CERAMIC 100000PF F 1608
C923	1-131-992-11	s	CAP, CERAMIC 100000PF F 1608
C924	1-131-992-11	s	CAP, CERAMIC 100000PF F 1608
C925	1-131-992-11	s	CAP, CERAMIC 100000PF F 1608
C926	1-131-992-11	s	CAP, CERAMIC 100000PF F 1608
C927	1-131-992-11	s	CAP, CERAMIC 100000PF F 1608
C928	1-131-992-11	s	CAP, CERAMIC 100000PF F 1608
C929	1-131-992-11	s	CAP, CERAMIC 100000PF F 1608
C930	1-131-992-11	s	CAP, CERAMIC 100000PF F 1608
C931	1-131-992-11	s	CAP, CERAMIC 100000PF F 1608
C932	1-131-992-11	s	CAP, CERAMIC 100000PF F 1608
C933	1-131-992-11	s	CAP, CERAMIC 100000PF F 1608
C934	1-131-992-11	s	CAP, CERAMIC 100000PF F 1608
C935	1-131-992-11	s	CAP, CERAMIC 100000PF F 1608
C936	1-131-992-11	s	CAP, CERAMIC 100000PF F 1608
C937	1-131-992-11	s	CAP, CERAMIC 100000PF F 1608

(DPR-229 BOARD [SUFFIX 14-])

Ref. No. or Q'ty	Part No.	SP	Description
C938	1-131-992-11	s	CAP, CERAMIC 100000PF F 1608
C939	1-131-992-11	s	CAP, CERAMIC 100000PF F 1608
CN16	1-580-789-91	s	PIN, CONNECTOR 6P
E100	1-535-877-22	s	CHIP,CHECKER (TEST POINT)
E200	1-535-877-22	s	CHIP,CHECKER (TEST POINT)
E300	1-535-877-22	s	CHIP,CHECKER (TEST POINT)
E400	1-535-877-22	s	CHIP,CHECKER (TEST POINT)
E401	1-535-877-22	s	CHIP,CHECKER (TEST POINT)
E600	1-535-877-22	s	CHIP,CHECKER (TEST POINT)
E700	1-535-877-22	s	CHIP,CHECKER (TEST POINT)
E800	1-535-877-22	s	CHIP,CHECKER (TEST POINT)
F800	⚠ 1-576-270-11	s	FUSE CHIP 4A/125V (6125)
F802	⚠ 1-576-270-11	s	FUSE CHIP 4A/125V (6125)
F803	⚠ 1-576-270-11	s	FUSE CHIP 4A/125V (6125)
FB200	1-469-094-21	s	FERRITE, EMI (SMD)
FL200	1-239-898-22	s	FILTER, EMI (SMD)
FL600	1-233-674-21	s	FILTER, EMI
FL601	1-233-674-21	s	FILTER, EMI
IC100	8-759-549-15	s	IC SN74LV245APWR
IC101	8-759-549-15	s	IC SN74LV245APWR
IC102	8-759-523-84	s	IC TC74VHC14FT (EL)
IC103	8-759-491-46	s	IC TC74VHCT04AFT (EL)
IC104	8-759-491-46	s	IC TC74VHCT04AFT (EL)
IC105	8-759-523-94	s	IC TC74VHC32FT(EL)
IC106	8-759-549-01	s	IC SN74LV125APWR
IC107	8-759-392-77	s	IC SN74LVC245APW (E20)
IC108	8-759-549-15	s	IC SN74LV245APWR
IC109	8-759-524-07	s	IC TC74VHC138FT(EL)
IC110	8-759-549-15	s	IC SN74LV245APWR
IC111	8-759-491-46	s	IC TC74VHCT04AFT (EL)
IC112	8-759-549-15	s	IC SN74LV245APWR
IC113	8-759-549-15	s	IC SN74LV245APWR
IC114	8-759-549-15	s	IC SN74LV245APWR
IC115	8-759-549-15	s	IC SN74LV245APWR
IC116	8-759-549-15	s	IC SN74LV245APWR
IC117	8-759-549-15	s	IC SN74LV245APWR
IC118	8-759-524-07	s	IC TC74VHC138FT(EL)
IC119	8-759-524-07	s	IC TC74VHC138FT(EL)
IC120	8-759-523-81	s	IC TC74VHC08FT(EL)
IC121	6-706-487-01	s	IC TC7SH08FU(T5RSOYJF)
IC122	8-759-523-92	s	IC TC74VHC21FT(EL)
IC123	8-759-549-15	s	IC SN74LV245APWR
IC124	8-752-392-03	s	IC CXD1095BR
IC125	6-706-487-01	s	IC TC7SH08FU(T5RSOYJF)
IC126	6-706-482-01	s	IC TC7SH00FU(T5RSOYJF)
IC200	8-759-475-55	s	IC TC74LCX574FT(EL)
IC201	8-759-475-55	s	IC TC74LCX574FT(EL)
IC202	8-759-475-55	s	IC TC74LCX574FT(EL)
IC203	8-759-669-41	s	IC SN74LVC125APWR-12
IC204	6-706-484-01	s	IC TC7SH04FU(T5RSOYJF)
IC205	8-759-669-41	s	IC SN74LVC125APWR-12
IC208	8-759-392-77	s	IC SN74LVC245APW (E20)
IC209	8-759-392-77	s	IC SN74LVC245APW (E20)
IC210	8-759-392-77	s	IC SN74LVC245APW (E20)
IC211	6-705-983-01	s	IC IS42S32200B-6TL-TR
IC217	6-706-484-01	s	IC TC7SH04FU(T5RSOYJF)

(DPR-229 BOARD [SUFFIX 14-])

Ref. No. or Q'ty	Part No.	SP	Description
IC301	8-759-449-09	s	IC CXD8945BR
IC302	8-759-524-10	s	IC TC74VHC157FT (EL)
IC303	8-759-524-10	s	IC TC74VHC157FT (EL)
IC307	6-700-497-01	s	IC MSM56V16800F-10TS-K
IC308	6-700-497-01	s	IC MSM56V16800F-10TS-K
IC309	6-700-497-01	s	IC MSM56V16800F-10TS-K
IC310	8-759-392-77	s	IC SN74LVC245APW (E20)
IC311	8-759-392-77	s	IC SN74LVC245APW (E20)
IC312	6-705-983-01	s	IC IS42S32200B-6TL-TR
IC401	8-759-669-41	s	IC SN74LVC125APWR-12
IC402	8-759-712-31	s	IC SN65LVDT388DBTR
IC404	8-759-712-31	s	IC SN65LVDT388DBTR
IC406	8-759-639-86	s	IC SN65LVDS32DR
IC407	8-759-656-31	o	IC CXD9094AR
IC408	8-759-712-32	s	IC SN65LVDS389DBTR
IC410	8-759-712-32	s	IC SN65LVDS389DBTR
IC412	8-759-712-32	s	IC SN65LVDS389DBTR
IC413	8-759-639-86	s	IC SN65LVDS32DR
IC601	8-759-524-09	s	IC TC74VHC153FT (EL)
IC602	8-759-475-55	s	IC TC74LCX574FT(EL)
IC603	8-759-475-55	s	IC TC74LCX574FT(EL)
IC653	8-759-549-15	s	IC SN74LV245APWR
IC654	8-759-549-15	s	IC SN74LV245APWR
IC655	8-759-664-03	s	IC LP3964EMPX-ADJ
IC700	8-752-392-03	s	IC CXD1095BR
IC701	6-702-254-01	s	IC DSPB56362PV100-1J21D
IC702	8-759-543-83	s	IC KM416V1204CT-L6
IC703	8-759-543-83	s	IC KM416V1204CT-L6
IC704	6-702-254-01	s	IC DSPB56362PV100-1J21D
IC705	8-759-543-83	s	IC KM416V1204CT-L6
IC706	8-759-543-83	s	IC KM416V1204CT-L6
IC707	6-702-254-01	s	IC DSPB56362PV100-1J21D
IC708	8-759-543-83	s	IC KM416V1204CT-L6
IC709	8-759-543-83	s	IC KM416V1204CT-L6
IC710	6-702-254-01	s	IC DSPB56362PV100-1J21D
IC711	8-759-543-83	s	IC KM416V1204CT-L6
IC712	8-759-543-83	s	IC KM416V1204CT-L6
IC801	8-759-549-15	s	IC SN74LV245APWR
IC802	6-706-487-01	s	IC TC7SH08FU(T5RSOYJF)
IC803	8-759-491-46	s	IC TC74VHCT04AFT (EL)
IC804	8-759-669-41	s	IC SN74LVC125APWR-12
IC805	8-759-475-43	s	IC TC74LCX125FT(EL)
IC808	8-759-549-15	s	IC SN74LV245APWR
IC809	8-759-523-78	s	IC TC74VHC00FT(EL)
IC810	8-759-392-77	s	IC SN74LVC245APW (E20)
IC812	8-759-669-41	s	IC SN74LVC125APWR-12
IC813	8-759-669-41	s	IC SN74LVC125APWR-12
IC814	8-759-669-41	s	IC SN74LVC125APWR-12
IC815	8-759-475-43	s	IC TC74LCX125FT(EL)
IC817	8-759-549-01	s	IC SN74LV125APWR
IC818	8-759-549-15	s	IC SN74LV245APWR
IC819	8-759-524-10	s	IC TC74VHC157FT (EL)
IC822	8-759-549-01	s	IC SN74LV125APWR
IC823	8-759-549-15	s	IC SN74LV245APWR
IC824	8-759-549-15	s	IC SN74LV245APWR
IC825	8-759-549-15	s	IC SN74LV245APWR
IC826	8-759-549-01	s	IC SN74LV125APWR
IC827	6-704-723-01	s	IC XCS20XL-4VQG100C
IC829	8-759-524-10	s	IC TC74VHC157FT (EL)

(DPR-229 BOARD [SUFFIX 14-])

Ref. No. or Q'ty	Part No.	SP	Description
IC831	8-759-524-27	s	IC TC74VHC244FT(EL)
IC832	6-706-484-01	s	IC TC7SH04FU(T5RSOYJF)
IC833	6-803-242-02	s	IC XC18V02-DPR229IMX-V4.00
IC834	6-803-243-03	s	IC XC18V02-DPR229SX-V3.01
IC902	6-802-024-01	s	IC CXD9012BR
IC903	8-759-549-15	s	IC SN74LV245APWR
IC904	8-759-549-15	s	IC SN74LV245APWR
IC905	6-705-983-01	s	IC IS42S32200B-6TL-TR
L100	1-412-056-11	s	INDUCTOR 4.7UH (3225)
L101	1-412-056-11	s	INDUCTOR 4.7UH (3225)
L102	1-412-056-11	s	INDUCTOR 4.7UH (3225)
L103	1-412-056-11	s	INDUCTOR 4.7UH (3225)
L200	1-412-056-11	s	INDUCTOR 4.7UH (3225)
L201	1-412-056-11	s	INDUCTOR 4.7UH (3225)
L402	1-412-056-11	s	INDUCTOR 4.7UH (3225)
L405	1-412-056-11	s	INDUCTOR 4.7UH (3225)
L600	1-412-056-11	s	INDUCTOR 4.7UH (3225)
L651	1-412-056-11	s	INDUCTOR 4.7UH (3225)
L800	1-419-630-11	s	COIL, CHOKE 4.7UH
L801	1-419-630-11	s	COIL, CHOKE 4.7UH
L802	1-419-630-11	s	COIL, CHOKE 4.7UH
L803	1-419-630-11	s	COIL, CHOKE 4.7UH
L804	1-412-056-11	s	INDUCTOR 4.7UH (3225)
L806	1-412-056-11	s	INDUCTOR 4.7UH (3225)
L807	1-412-056-11	s	INDUCTOR 4.7UH (3225)
L808	1-412-056-11	s	INDUCTOR 4.7UH (3225)
Q400	8-729-928-81	s	TRANSISTOR DTC144EE
Q800	8-729-928-81	s	TRANSISTOR DTC144EE
Q801	8-729-045-53	s	TRANSISTOR SI4431DY-T1
Q802	8-729-140-63	s	TRANSISTOR 2SA1611-M5M6
R100	1-218-895-11	s	RESISTOR,CHIP 100K 1/10W(1608)
R101	1-218-895-11	s	RESISTOR,CHIP 100K 1/10W(1608)
R102	1-218-895-11	s	RESISTOR,CHIP 100K 1/10W(1608)
R103	1-218-895-11	s	RESISTOR,CHIP 100K 1/10W(1608)
R105	1-218-895-11	s	RESISTOR,CHIP 100K 1/10W(1608)
R106	1-211-985-11	s	RESISTOR,CHIP 47 1/10W (1608)
R107	1-211-985-11	s	RESISTOR,CHIP 47 1/10W (1608)
R108	1-211-985-11	s	RESISTOR,CHIP 47 1/10W (1608)
R109	1-211-985-11	s	RESISTOR,CHIP 47 1/10W (1608)
R110	1-218-895-11	s	RESISTOR,CHIP 100K 1/10W(1608)
R111	1-218-823-11	s	RESISTOR,CHIP 100 1/10W (1608)
R115	1-218-895-11	s	RESISTOR,CHIP 100K 1/10W(1608)
R117	1-218-863-11	s	RESISTOR,CHIP 4.7K 1/10W(1608)
R118	1-218-863-11	s	RESISTOR,CHIP 4.7K 1/10W(1608)
R124	1-218-863-11	s	RESISTOR,CHIP 4.7K 1/10W(1608)
R126	1-218-863-11	s	RESISTOR,CHIP 4.7K 1/10W(1608)
R130	1-216-864-11	s	CONDUCTOR, CHIP (1608)
R131	1-216-864-11	s	CONDUCTOR, CHIP (1608)
R132	1-216-864-11	s	CONDUCTOR, CHIP (1608)
R133	1-216-864-11	s	CONDUCTOR, CHIP (1608)
R134	1-218-863-11	s	RESISTOR,CHIP 4.7K 1/10W(1608)
R136	1-211-977-11	s	RESISTOR,CHIP 22 1/10W (1608)
R141	1-216-864-11	s	CONDUCTOR, CHIP (1608)
R143	1-218-895-11	s	RESISTOR,CHIP 100K 1/10W(1608)
R144	1-211-977-11	s	RESISTOR,CHIP 22 1/10W (1608)
R200	1-218-831-11	s	RESISTOR, CHIP 220 1/10W(1608)
R201	1-211-977-11	s	RESISTOR,CHIP 22 1/10W (1608)
R203	1-211-985-11	s	RESISTOR,CHIP 47 1/10W (1608)

(DPR-229 BOARD [SUFFIX 14-])

Ref. No. or Q'ty	Part No.	SP	Description
R204	1-211-977-11	s	RESISTOR,CHIP 22 1/10W (1608)
R207	1-216-864-11	s	CONDUCTOR, CHIP (1608)
R208	1-218-871-11	s	RESISTOR,CHIP 10K 1/10W (1608)
R209	1-216-864-11	s	CONDUCTOR, CHIP (1608)
R210	1-216-864-11	s	CONDUCTOR, CHIP (1608)
R212	1-216-864-11	s	CONDUCTOR, CHIP (1608)
R213	1-216-864-11	s	CONDUCTOR, CHIP (1608)
R215	1-216-864-11	s	CONDUCTOR, CHIP (1608)
R216	1-216-864-11	s	CONDUCTOR, CHIP (1608)
R217	1-216-864-11	s	CONDUCTOR, CHIP (1608)
R218	1-211-977-11	s	RESISTOR,CHIP 22 1/10W (1608)
R219	1-218-863-11	s	RESISTOR,CHIP 4.7K 1/10W(1608)
R300	1-216-864-11	s	CONDUCTOR, CHIP (1608)
R301	1-216-864-11	s	CONDUCTOR, CHIP (1608)
R302	1-216-864-11	s	CONDUCTOR, CHIP (1608)
R303	1-218-863-11	s	RESISTOR,CHIP 4.7K 1/10W(1608)
R304	1-218-863-11	s	RESISTOR,CHIP 4.7K 1/10W(1608)
R305	1-218-863-11	s	RESISTOR,CHIP 4.7K 1/10W(1608)
R306	1-218-895-11	s	RESISTOR,CHIP 100K 1/10W(1608)
R307	1-218-863-11	s	RESISTOR,CHIP 4.7K 1/10W(1608)
R312	1-216-864-11	s	CONDUCTOR, CHIP (1608)
R313	1-216-864-11	s	CONDUCTOR, CHIP (1608)
R314	1-216-864-11	s	CONDUCTOR, CHIP (1608)
R315	1-216-864-11	s	CONDUCTOR, CHIP (1608)
R316	1-216-864-11	s	CONDUCTOR, CHIP (1608)
R317	1-218-895-11	s	RESISTOR,CHIP 100K 1/10W(1608)
R318	1-218-895-11	s	RESISTOR,CHIP 100K 1/10W(1608)
R319	1-218-895-11	s	RESISTOR,CHIP 100K 1/10W(1608)
R320	1-218-895-11	s	RESISTOR,CHIP 100K 1/10W(1608)
R321	1-218-895-11	s	RESISTOR,CHIP 100K 1/10W(1608)
R322	1-216-864-11	s	CONDUCTOR, CHIP (1608)
R323	1-216-864-11	s	CONDUCTOR, CHIP (1608)
R324	1-216-864-11	s	CONDUCTOR, CHIP (1608)
R325	1-216-864-11	s	CONDUCTOR, CHIP (1608)
R326	1-216-864-11	s	CONDUCTOR, CHIP (1608)
R327	1-216-864-11	s	CONDUCTOR, CHIP (1608)
R328	1-216-864-11	s	CONDUCTOR, CHIP (1608)
R329	1-216-864-11	s	CONDUCTOR, CHIP (1608)
R330	1-218-895-11	s	RESISTOR,CHIP 100K 1/10W(1608)
R331	1-216-864-11	s	CONDUCTOR, CHIP (1608)
R335	1-216-864-11	s	CONDUCTOR, CHIP (1608)
R338	1-218-863-11	s	RESISTOR,CHIP 4.7K 1/10W(1608)
R349	1-216-864-11	s	CONDUCTOR, CHIP (1608)
R351	1-211-977-11	s	RESISTOR,CHIP 22 1/10W (1608)
R352	1-211-977-11	s	RESISTOR,CHIP 22 1/10W (1608)
R353	1-218-863-11	s	RESISTOR,CHIP 4.7K 1/10W(1608)
R354	1-218-863-11	s	RESISTOR,CHIP 4.7K 1/10W(1608)
R355	1-218-863-11	s	RESISTOR,CHIP 4.7K 1/10W(1608)
R356	1-216-864-11	s	CONDUCTOR, CHIP (1608)
R359	1-211-977-11	s	RESISTOR,CHIP 22 1/10W (1608)
R400	1-218-895-11	s	RESISTOR,CHIP 100K 1/10W(1608)
R402	1-211-985-11	s	RESISTOR,CHIP 47 1/10W (1608)
R403	1-211-985-11	s	RESISTOR,CHIP 47 1/10W (1608)
R421	1-218-823-11	s	RESISTOR,CHIP 100 1/10W (1608)
R422	1-218-823-11	s	RESISTOR,CHIP 100 1/10W (1608)
R423	1-218-823-11	s	RESISTOR,CHIP 100 1/10W (1608)
R424	1-218-823-11	s	RESISTOR,CHIP 100 1/10W (1608)
R428	1-218-823-11	s	RESISTOR,CHIP 100 1/10W (1608)
R429	1-218-823-11	s	RESISTOR,CHIP 100 1/10W (1608)

(DPR-229 BOARD [SUFFIX 14-])

Ref. No. or Q'ty	Part No.	SP	Description
R430	1-218-823-11	s	RESISTOR,CHIP 100 1/10W (1608)
R431	1-218-823-11	s	RESISTOR,CHIP 100 1/10W (1608)
R432	1-211-977-11	s	RESISTOR,CHIP 22 1/10W (1608)
R433	1-211-977-11	s	RESISTOR,CHIP 22 1/10W (1608)
R434	1-211-977-11	s	RESISTOR,CHIP 22 1/10W (1608)
R435	1-216-864-11	s	CONDUCTOR, CHIP (1608)
R436	1-216-864-11	s	CONDUCTOR, CHIP (1608)
R437	1-211-985-11	s	RESISTOR,CHIP 47 1/10W (1608)
R439	1-216-864-11	s	CONDUCTOR, CHIP (1608)
R440	1-218-895-11	s	RESISTOR,CHIP 100K 1/10W(1608)
R442	1-211-985-11	s	RESISTOR,CHIP 47 1/10W (1608)
R443	1-218-863-11	s	RESISTOR,CHIP 4.7K 1/10W(1608)
R605	1-216-864-11	s	CONDUCTOR, CHIP (1608)
R606	1-216-864-11	s	CONDUCTOR, CHIP (1608)
R607	1-216-864-11	s	CONDUCTOR, CHIP (1608)
R619	1-218-895-11	s	RESISTOR,CHIP 100K 1/10W(1608)
R650	1-218-847-11	s	RESISTOR, CHIP 1K 1/10W (1608)
R652	1-216-864-11	s	CONDUCTOR, CHIP (1608)
R653	1-216-864-11	s	CONDUCTOR, CHIP (1608)
R654	1-216-864-11	s	CONDUCTOR, CHIP (1608)
R657	1-218-871-11	s	RESISTOR,CHIP 10K 1/10W (1608)
R658	1-216-864-11	s	CONDUCTOR, CHIP (1608)
R659	1-216-864-11	s	CONDUCTOR, CHIP (1608)
R660	1-216-864-11	s	CONDUCTOR, CHIP (1608)
R661	1-218-903-11	s	RESISTOR,CHIP 220K 1/10W(1608)
R662	1-218-878-11	s	RESISTOR,CHIP 20K 1/10W (1608)
R663	1-218-878-11	s	RESISTOR,CHIP 20K 1/10W (1608)
R666	1-211-990-11	s	RESISTOR,CHIP 75 1/10W (1608)
R668	1-211-990-11	s	RESISTOR,CHIP 75 1/10W (1608)
R670	1-218-903-11	s	RESISTOR,CHIP 220K 1/10W(1608)
R671	1-218-903-11	s	RESISTOR,CHIP 220K 1/10W(1608)
R672	1-218-871-11	s	RESISTOR,CHIP 10K 1/10W (1608)
R673	1-218-856-11	s	RESISTOR,CHIP 2.4K 1/10W(1608)
R674	1-218-871-11	s	RESISTOR,CHIP 10K 1/10W (1608)
R676	1-211-899-11	s	RESISTOR,CHIP 0.22 1/4W (3225)
R715	1-216-864-11	s	CONDUCTOR, CHIP (1608)
R716	1-216-864-11	s	CONDUCTOR, CHIP (1608)
R717	1-216-864-11	s	CONDUCTOR, CHIP (1608)
R718	1-216-864-11	s	CONDUCTOR, CHIP (1608)
R719	1-216-864-11	s	CONDUCTOR, CHIP (1608)
R720	1-216-864-11	s	CONDUCTOR, CHIP (1608)
R722	1-216-864-11	s	CONDUCTOR, CHIP (1608)
R723	1-216-864-11	s	CONDUCTOR, CHIP (1608)
R724	1-216-864-11	s	CONDUCTOR, CHIP (1608)
R725	1-216-864-11	s	CONDUCTOR, CHIP (1608)
R726	1-216-864-11	s	CONDUCTOR, CHIP (1608)
R727	1-216-864-11	s	CONDUCTOR, CHIP (1608)
R728	1-216-864-11	s	CONDUCTOR, CHIP (1608)
R729	1-216-864-11	s	CONDUCTOR, CHIP (1608)
R738	1-218-847-11	s	RESISTOR, CHIP 1K 1/10W (1608)
R739	1-218-847-11	s	RESISTOR, CHIP 1K 1/10W (1608)
R740	1-218-847-11	s	RESISTOR, CHIP 1K 1/10W (1608)
R748	1-216-864-11	s	CONDUCTOR, CHIP (1608)
R749	1-216-864-11	s	CONDUCTOR, CHIP (1608)
R750	1-216-864-11	s	CONDUCTOR, CHIP (1608)
R751	1-216-864-11	s	CONDUCTOR, CHIP (1608)
R752	1-216-864-11	s	CONDUCTOR, CHIP (1608)
R753	1-216-864-11	s	CONDUCTOR, CHIP (1608)
R755	1-216-864-11	s	CONDUCTOR, CHIP (1608)

(DPR-229 BOARD [SUFFIX 14-])

Ref. No. or Q'ty	Part No.	SP	Description
R756	1-216-864-11	s	CONDUCTOR, CHIP (1608)
R757	1-216-864-11	s	CONDUCTOR, CHIP (1608)
R758	1-216-864-11	s	CONDUCTOR, CHIP (1608)
R759	1-216-864-11	s	CONDUCTOR, CHIP (1608)
R760	1-216-864-11	s	CONDUCTOR, CHIP (1608)
R761	1-216-864-11	s	CONDUCTOR, CHIP (1608)
R762	1-216-864-11	s	CONDUCTOR, CHIP (1608)
R771	1-218-847-11	s	RESISTOR, CHIP 1K 1/10W (1608)
R772	1-218-847-11	s	RESISTOR, CHIP 1K 1/10W (1608)
R773	1-218-847-11	s	RESISTOR, CHIP 1K 1/10W (1608)
R781	1-216-864-11	s	CONDUCTOR, CHIP (1608)
R782	1-216-864-11	s	CONDUCTOR, CHIP (1608)
R783	1-216-864-11	s	CONDUCTOR, CHIP (1608)
R784	1-216-864-11	s	CONDUCTOR, CHIP (1608)
R785	1-216-864-11	s	CONDUCTOR, CHIP (1608)
R786	1-216-864-11	s	CONDUCTOR, CHIP (1608)
R788	1-216-864-11	s	CONDUCTOR, CHIP (1608)
R789	1-216-864-11	s	CONDUCTOR, CHIP (1608)
R790	1-216-864-11	s	CONDUCTOR, CHIP (1608)
R791	1-216-864-11	s	CONDUCTOR, CHIP (1608)
R792	1-216-864-11	s	CONDUCTOR, CHIP (1608)
R793	1-216-864-11	s	CONDUCTOR, CHIP (1608)
R794	1-216-864-11	s	CONDUCTOR, CHIP (1608)
R795	1-216-864-11	s	CONDUCTOR, CHIP (1608)
R801	1-216-864-11	s	CONDUCTOR, CHIP (1608)
R802	1-216-864-11	s	CONDUCTOR, CHIP (1608)
R803	1-218-863-11	s	RESISTOR,CHIP 4.7K 1/10W(1608)
R805	1-218-863-11	s	RESISTOR,CHIP 4.7K 1/10W(1608)
R811	1-216-864-11	s	CONDUCTOR, CHIP (1608)
R813	1-218-831-11	s	RESISTOR, CHIP 220 1/10W(1608)
R814	1-218-831-11	s	RESISTOR, CHIP 220 1/10W(1608)
R815	1-218-831-11	s	RESISTOR, CHIP 220 1/10W(1608)
R820	1-211-977-11	s	RESISTOR,CHIP 22 1/10W (1608)
R822	1-211-977-11	s	RESISTOR,CHIP 22 1/10W (1608)
R823	1-211-977-11	s	RESISTOR,CHIP 22 1/10W (1608)
R824	1-211-977-11	s	RESISTOR,CHIP 22 1/10W (1608)
R825	1-211-977-11	s	RESISTOR,CHIP 22 1/10W (1608)
R826	1-211-977-11	s	RESISTOR,CHIP 22 1/10W (1608)
R827	1-211-977-11	s	RESISTOR,CHIP 22 1/10W (1608)
R828	1-211-977-11	s	RESISTOR,CHIP 22 1/10W (1608)
R831	1-211-977-11	s	RESISTOR,CHIP 22 1/10W (1608)
R834	1-218-895-11	s	RESISTOR,CHIP 100K 1/10W(1608)
R835	1-218-895-11	s	RESISTOR,CHIP 100K 1/10W(1608)
R839	1-216-864-11	s	CONDUCTOR, CHIP (1608)
R841	1-211-977-11	s	RESISTOR,CHIP 22 1/10W (1608)
R854	1-211-977-11	s	RESISTOR,CHIP 22 1/10W (1608)
R855	1-211-977-11	s	RESISTOR,CHIP 22 1/10W (1608)
R856	1-211-977-11	s	RESISTOR,CHIP 22 1/10W (1608)
R857	1-211-977-11	s	RESISTOR,CHIP 22 1/10W (1608)
R858	1-211-977-11	s	RESISTOR,CHIP 22 1/10W (1608)
R859	1-211-977-11	s	RESISTOR,CHIP 22 1/10W (1608)
R860	1-211-977-11	s	RESISTOR,CHIP 22 1/10W (1608)
R861	1-211-977-11	s	RESISTOR,CHIP 22 1/10W (1608)
R862	1-211-977-11	s	RESISTOR,CHIP 22 1/10W (1608)
R863	1-218-871-11	s	RESISTOR,CHIP 10K 1/10W (1608)
R864	1-218-847-11	s	RESISTOR, CHIP 1K 1/10W (1608)
R865	1-218-847-11	s	RESISTOR, CHIP 1K 1/10W (1608)
R866	1-218-835-11	s	RESISTOR,CHIP 330 1/10W (1608)
R867	1-218-835-11	s	RESISTOR,CHIP 330 1/10W (1608)

(DPR-229 BOARD [SUFFIX 14-])

Ref. No. or Q'ty	Part No.	SP	Description
R903	1-218-849-11	s	RESISTOR,CHIP 1.2K 1/10W(1608)
R904	1-218-847-11	s	RESISTOR, CHIP 1K 1/10W (1608)
R905	1-216-864-11	s	CONDUCTOR, CHIP (1608)
R906	1-216-864-11	s	CONDUCTOR, CHIP (1608)
R907	1-216-864-11	s	CONDUCTOR, CHIP (1608)
R908	1-216-864-11	s	CONDUCTOR, CHIP (1608)
R909	1-218-895-11	s	RESISTOR,CHIP 100K 1/10W(1608)
R911	1-218-871-11	s	RESISTOR,CHIP 10K 1/10W (1608)
R912	1-218-835-11	s	RESISTOR,CHIP 330 1/10W (1608)
R913	1-216-864-11	s	CONDUCTOR, CHIP (1608)
R914	1-216-864-11	s	CONDUCTOR, CHIP (1608)
R915	1-218-895-11	s	RESISTOR,CHIP 100K 1/10W(1608)
R1004	1-218-847-11	s	RESISTOR, CHIP 1K 1/10W (1608)
R1005	1-218-847-11	s	RESISTOR, CHIP 1K 1/10W (1608)
R1006	1-218-847-11	s	RESISTOR, CHIP 1K 1/10W (1608)
R1014	1-216-864-11	s	CONDUCTOR, CHIP (1608)
R1015	1-216-864-11	s	CONDUCTOR, CHIP (1608)
R1016	1-216-864-11	s	CONDUCTOR, CHIP (1608)
R1017	1-216-864-11	s	CONDUCTOR, CHIP (1608)
R1018	1-216-864-11	s	CONDUCTOR, CHIP (1608)
R1019	1-216-864-11	s	CONDUCTOR, CHIP (1608)
R1021	1-216-864-11	s	CONDUCTOR, CHIP (1608)
R1022	1-216-864-11	s	CONDUCTOR, CHIP (1608)
R1023	1-216-864-11	s	CONDUCTOR, CHIP (1608)
R1024	1-216-864-11	s	CONDUCTOR, CHIP (1608)
R1025	1-216-864-11	s	CONDUCTOR, CHIP (1608)
R1026	1-216-864-11	s	CONDUCTOR, CHIP (1608)
R1027	1-216-864-11	s	CONDUCTOR, CHIP (1608)
R1028	1-216-864-11	s	CONDUCTOR, CHIP (1608)
R1037	1-216-864-11	s	CONDUCTOR, CHIP (1608)
R1038	1-216-864-11	s	CONDUCTOR, CHIP (1608)
R1039	1-216-864-11	s	CONDUCTOR, CHIP (1608)
R1040	1-216-864-11	s	CONDUCTOR, CHIP (1608)
R1042	1-218-847-11	s	RESISTOR, CHIP 1K 1/10W (1608)
R1043	1-218-847-11	s	RESISTOR, CHIP 1K 1/10W (1608)
R1044	1-218-847-11	s	RESISTOR, CHIP 1K 1/10W (1608)
R1052	1-218-895-11	s	RESISTOR,CHIP 100K 1/10W(1608)
R1053	1-218-895-11	s	RESISTOR,CHIP 100K 1/10W(1608)
R1054	1-216-864-11	s	CONDUCTOR, CHIP (1608)
R1055	1-216-864-11	s	CONDUCTOR, CHIP (1608)
R1056	1-216-864-11	s	CONDUCTOR, CHIP (1608)
RB100	1-233-810-21	s	RES, NETWORK 100K (3216)
RB101	1-233-810-21	s	RES, NETWORK 100K (3216)
RB102	1-239-409-11	s	RESISTOR NETWORK 47 (3216)
RB103	1-239-409-11	s	RESISTOR NETWORK 47 (3216)
RB104	1-233-810-21	s	RES, NETWORK 100K (3216)
RB106	1-234-397-11	s	NETWORK, RES (8 GANG) 100K
RB107	1-234-397-11	s	NETWORK, RES (8 GANG) 100K
RB108	1-233-575-11	s	RES, CHIP NETWORK 22
RB109	1-233-575-11	s	RES, CHIP NETWORK 22
RB110	1-233-575-11	s	RES, CHIP NETWORK 22
RB111	1-233-575-11	s	RES, CHIP NETWORK 22
RB112	1-233-575-11	s	RES, CHIP NETWORK 22
RB113	1-234-397-11	s	NETWORK, RES (8 GANG) 100K
RB114	1-233-576-11	s	RESISTOR,CHIP NETWORK 100
RB115	1-233-576-11	s	RESISTOR,CHIP NETWORK 100
RB116	1-233-810-21	s	RES, NETWORK 100K (3216)
RB117	1-234-397-11	s	NETWORK, RES (8 GANG) 100K

(DPR-229 BOARD [SUFFIX 14-])

Ref. No. or Q'ty	Part No.	SP	Description
RB118	1-234-397-11	s	NETWORK, RES (8 GANG) 100K
RB119	1-234-397-11	s	NETWORK, RES (8 GANG) 100K
RB120	1-234-397-11	s	NETWORK, RES (8 GANG) 100K
RB121	1-233-576-11	s	RESISTOR,CHIP NETWORK 100
RB122	1-233-576-11	s	RESISTOR,CHIP NETWORK 100
RB123	1-234-397-11	s	NETWORK, RES (8 GANG) 100K
RB200	1-233-411-11	s	RESISTOR,CHIP NETWORK 220/3216
RB201	1-233-411-11	s	RESISTOR,CHIP NETWORK 220/3216
RB202	1-233-411-11	s	RESISTOR,CHIP NETWORK 220/3216
RB203	1-233-411-11	s	RESISTOR,CHIP NETWORK 220/3216
RB204	1-233-411-11	s	RESISTOR,CHIP NETWORK 220/3216
RB205	1-233-575-11	s	RES, CHIP NETWORK 22
RB206	1-233-575-11	s	RES, CHIP NETWORK 22
RB400	1-239-409-11	s	RESISTOR NETWORK 47 (3216)
RB401	1-239-409-11	s	RESISTOR NETWORK 47 (3216)
RB402	1-239-409-11	s	RESISTOR NETWORK 47 (3216)
RB403	1-239-409-11	s	RESISTOR NETWORK 47 (3216)
RB404	1-239-409-11	s	RESISTOR NETWORK 47 (3216)
RB600	1-234-523-21	s	RESISTOR,CHIP NETWORK
RB601	1-234-523-21	s	RESISTOR,CHIP NETWORK
RB602	1-234-523-21	s	RESISTOR,CHIP NETWORK
RB700	1-233-810-21	s	RES, NETWORK 100K (3216)
RB701	1-233-810-21	s	RES, NETWORK 100K (3216)
RB702	1-233-810-21	s	RES, NETWORK 100K (3216)
RB703	1-233-810-21	s	RES, NETWORK 100K (3216)
RB704	1-233-810-21	s	RES, NETWORK 100K (3216)
RB705	1-233-810-21	s	RES, NETWORK 100K (3216)
RB706	1-233-810-21	s	RES, NETWORK 100K (3216)
RB707	1-233-810-21	s	RES, NETWORK 100K (3216)
RB708	1-233-810-21	s	RES, NETWORK 100K (3216)
RB709	1-234-397-11	s	NETWORK, RES (8 GANG) 100K
RB710	1-234-397-11	s	NETWORK, RES (8 GANG) 100K
RB711	1-234-397-11	s	NETWORK, RES (8 GANG) 100K
RB712	1-234-397-11	s	NETWORK, RES (8 GANG) 100K
RB801	1-233-810-21	s	RES, NETWORK 100K (3216)
RB804	1-233-411-11	s	RESISTOR,CHIP NETWORK 220/3216
RB805	1-233-411-11	s	RESISTOR,CHIP NETWORK 220/3216
RB806	1-233-411-11	s	RESISTOR,CHIP NETWORK 220/3216
RB807	1-233-414-11	s	RESISTOR,CHIP NETWORK 4.7K
RB808	1-239-409-11	s	RESISTOR NETWORK 47 (3216)
RB809	1-239-409-11	s	RESISTOR NETWORK 47 (3216)
RB810	1-239-409-11	s	RESISTOR NETWORK 47 (3216)
RB811	1-239-409-11	s	RESISTOR NETWORK 47 (3216)
RB812	1-239-409-11	s	RESISTOR NETWORK 47 (3216)
RB813	1-233-810-21	s	RES, NETWORK 100K (3216)
RB814	1-233-810-21	s	RES, NETWORK 100K (3216)
RB815	1-233-810-21	s	RES, NETWORK 100K (3216)
RB816	1-233-810-21	s	RES, NETWORK 100K (3216)
RB817	1-233-414-11	s	RESISTOR,CHIP NETWORK 4.7K
RB818	1-236-908-11	s	RESISTOR,NETWORK 10K (3216)
X200	1-781-809-21	s	OSCILLATOR, CRYSTAL (SMD)

DPR-229C BOARD [SUFFIX 14-]

[Lot No. 561 -] MSW-2000

Ref. No. or Q'ty	Part No.	SP	Description
1pc	A-1119-167-A	s	MOUNTED CIRCUIT BOARD, DPR-229C
1pc	3-179-084-11	s	LEVER (R), C BOARD
1pc	3-179-085-11	s	LEVER (L), C BOARD
C100	1-131-992-11	s	CAP, CERAMIC 100000PF F 1608
C101	1-131-992-11	s	CAP, CERAMIC 100000PF F 1608
C102	1-162-927-11	s	CAPACITOR,CERAMIC 100PF/50V CH
C103	1-126-394-11	s	CAPACITOR,ELECT 10MF/16V(CHIP)
C104	1-131-992-11	s	CAP, CERAMIC 100000PF F 1608
C105	1-131-992-11	s	CAP, CERAMIC 100000PF F 1608
C106	1-131-992-11	s	CAP, CERAMIC 100000PF F 1608
C107	1-131-992-11	s	CAP, CERAMIC 100000PF F 1608
C108	1-131-992-11	s	CAP, CERAMIC 100000PF F 1608
C109	1-131-992-11	s	CAP, CERAMIC 100000PF F 1608
C110	1-131-992-11	s	CAP, CERAMIC 100000PF F 1608
C111	1-131-992-11	s	CAP, CERAMIC 100000PF F 1608
C112	1-131-992-11	s	CAP, CERAMIC 100000PF F 1608
C113	1-131-992-11	s	CAP, CERAMIC 100000PF F 1608
C114	1-131-992-11	s	CAP, CERAMIC 100000PF F 1608
C115	1-131-992-11	s	CAP, CERAMIC 100000PF F 1608
C116	1-131-992-11	s	CAP, CERAMIC 100000PF F 1608
C117	1-131-992-11	s	CAP, CERAMIC 100000PF F 1608
C118	1-131-992-11	s	CAP, CERAMIC 100000PF F 1608
C119	1-131-992-11	s	CAP, CERAMIC 100000PF F 1608
C120	1-131-992-11	s	CAP, CERAMIC 100000PF F 1608
C121	1-131-992-11	s	CAP, CERAMIC 100000PF F 1608
C122	1-131-992-11	s	CAP, CERAMIC 100000PF F 1608
C123	1-131-992-11	s	CAP, CERAMIC 100000PF F 1608
C124	1-131-992-11	s	CAP, CERAMIC 100000PF F 1608
C125	1-131-992-11	s	CAP, CERAMIC 100000PF F 1608
C126	1-131-992-11	s	CAP, CERAMIC 100000PF F 1608
C127	1-131-992-11	s	CAP, CERAMIC 100000PF F 1608
C200	1-126-394-11	s	CAPACITOR,ELECT 10MF/16V(CHIP)
C201	1-131-992-11	s	CAP, CERAMIC 100000PF F 1608
C202	1-131-992-11	s	CAP, CERAMIC 100000PF F 1608
C203	1-131-992-11	s	CAP, CERAMIC 100000PF F 1608
C204	1-126-394-11	s	CAPACITOR,ELECT 10MF/16V(CHIP)
C205	1-131-992-11	s	CAP, CERAMIC 100000PF F 1608
C206	1-131-992-11	s	CAP, CERAMIC 100000PF F 1608
C207	1-126-394-11	s	CAPACITOR,ELECT 10MF/16V(CHIP)
C208	1-131-992-11	s	CAP, CERAMIC 100000PF F 1608
C209	1-131-992-11	s	CAP, CERAMIC 100000PF F 1608
C210	1-131-992-11	s	CAP, CERAMIC 100000PF F 1608
C211	1-127-692-91	s	CAP, CHIP CERAMIC 10MF B 3216
C212	1-127-692-91	s	CAP, CHIP CERAMIC 10MF B 3216
C213	1-131-992-11	s	CAP, CERAMIC 100000PF F 1608
C214	1-131-992-11	s	CAP, CERAMIC 100000PF F 1608
C215	1-131-992-11	s	CAP, CERAMIC 100000PF F 1608
C216	1-131-992-11	s	CAP, CERAMIC 100000PF F 1608
C217	1-131-992-11	s	CAP, CERAMIC 100000PF F 1608
C218	1-131-992-11	s	CAP, CERAMIC 100000PF F 1608
C219	1-131-992-11	s	CAP, CERAMIC 100000PF F 1608
C220	1-131-992-11	s	CAP, CERAMIC 100000PF F 1608
C221	1-131-992-11	s	CAP, CERAMIC 100000PF F 1608
C222	1-131-992-11	s	CAP, CERAMIC 100000PF F 1608
C223	1-131-992-11	s	CAP, CERAMIC 100000PF F 1608
C224	1-131-992-11	s	CAP, CERAMIC 100000PF F 1608
C225	1-131-992-11	s	CAP, CERAMIC 100000PF F 1608

(DPR-229C BOARD [SUFFIX 14-])

Ref. No. or Q'ty	Part No.	SP	Description
C226	1-131-992-11	s	CAP, CERAMIC 100000PF F 1608
C227	1-131-992-11	s	CAP, CERAMIC 100000PF F 1608
C228	1-131-992-11	s	CAP, CERAMIC 100000PF F 1608
C230	1-126-394-11	s	CAPACITOR,ELECT 10MF/16V(CHIP)
C231	1-131-992-11	s	CAP, CERAMIC 100000PF F 1608
C232	1-131-992-11	s	CAP, CERAMIC 100000PF F 1608
C233	1-131-992-11	s	CAP, CERAMIC 100000PF F 1608
C234	1-131-992-11	s	CAP, CERAMIC 100000PF F 1608
C235	1-131-992-11	s	CAP, CERAMIC 100000PF F 1608
C300	1-131-992-11	s	CAP, CERAMIC 100000PF F 1608
C301	1-131-992-11	s	CAP, CERAMIC 100000PF F 1608
C302	1-131-992-11	s	CAP, CERAMIC 100000PF F 1608
C303	1-131-992-11	s	CAP, CERAMIC 100000PF F 1608
C304	1-126-394-11	s	CAPACITOR,ELECT 10MF/16V(CHIP)
C305	1-131-992-11	s	CAP, CERAMIC 100000PF F 1608
C306	1-131-992-11	s	CAP, CERAMIC 100000PF F 1608
C307	1-131-992-11	s	CAP, CERAMIC 100000PF F 1608
C308	1-131-992-11	s	CAP, CERAMIC 100000PF F 1608
C309	1-131-992-11	s	CAP, CERAMIC 100000PF F 1608
C310	1-131-992-11	s	CAP, CERAMIC 100000PF F 1608
C311	1-131-992-11	s	CAP, CERAMIC 100000PF F 1608
C312	1-131-992-11	s	CAP, CERAMIC 100000PF F 1608
C313	1-131-992-11	s	CAP, CERAMIC 100000PF F 1608
C314	1-126-394-11	s	CAPACITOR,ELECT 10MF/16V(CHIP)
C315	1-131-992-11	s	CAP, CERAMIC 100000PF F 1608
C316	1-131-992-11	s	CAP, CERAMIC 100000PF F 1608
C320	1-131-992-11	s	CAP, CERAMIC 100000PF F 1608
C321	1-131-992-11	s	CAP, CERAMIC 100000PF F 1608
C322	1-131-992-11	s	CAP, CERAMIC 100000PF F 1608
C323	1-131-992-11	s	CAP, CERAMIC 100000PF F 1608
C324	1-131-992-11	s	CAP, CERAMIC 100000PF F 1608
C325	1-131-992-11	s	CAP, CERAMIC 100000PF F 1608
C326	1-131-992-11	s	CAP, CERAMIC 100000PF F 1608
C327	1-131-992-11	s	CAP, CERAMIC 100000PF F 1608
C328	1-131-992-11	s	CAP, CERAMIC 100000PF F 1608
C329	1-131-992-11	s	CAP, CERAMIC 100000PF F 1608
C330	1-131-992-11	s	CAP, CERAMIC 100000PF F 1608
C331	1-126-394-11	s	CAPACITOR,ELECT 10MF/16V(CHIP)
C332	1-131-992-11	s	CAP, CERAMIC 100000PF F 1608
C333	1-131-992-11	s	CAP, CERAMIC 100000PF F 1608
C334	1-131-992-11	s	CAP, CERAMIC 100000PF F 1608
C335	1-131-992-11	s	CAP, CERAMIC 100000PF F 1608
C336	1-131-992-11	s	CAP, CERAMIC 100000PF F 1608
C337	1-131-992-11	s	CAP, CERAMIC 100000PF F 1608
C338	1-131-992-11	s	CAP, CERAMIC 100000PF F 1608
C339	1-131-992-11	s	CAP, CERAMIC 100000PF F 1608
C404	1-131-992-11	s	CAP, CERAMIC 100000PF F 1608
C412	1-126-394-11	s	CAPACITOR,ELECT 10MF/16V(CHIP)
C413	1-131-992-11	s	CAP, CERAMIC 100000PF F 1608
C415	1-131-992-11	s	CAP, CERAMIC 100000PF F 1608
C417	1-131-992-11	s	CAP, CERAMIC 100000PF F 1608
C418	1-126-394-11	s	CAPACITOR,ELECT 10MF/16V(CHIP)
C419	1-131-992-11	s	CAP, CERAMIC 100000PF F 1608
C420	1-131-992-11	s	CAP, CERAMIC 100000PF F 1608
C421	1-131-992-11	s	CAP, CERAMIC 100000PF F 1608
C422	1-131-992-11	s	CAP, CERAMIC 100000PF F 1608
C423	1-131-992-11	s	CAP, CERAMIC 100000PF F 1608
C424	1-131-992-11	s	CAP, CERAMIC 100000PF F 1608
C425	1-131-992-11	s	CAP, CERAMIC 100000PF F 1608

(DPR-229C BOARD [SUFFIX 14-])

Ref. No. or Q'ty	Part No.	SP	Description
C426	1-131-992-11	s	CAP, CERAMIC 100000PF F 1608
C427	1-131-992-11	s	CAP, CERAMIC 100000PF F 1608
C428	1-131-992-11	s	CAP, CERAMIC 100000PF F 1608
C429	1-131-992-11	s	CAP, CERAMIC 100000PF F 1608
C430	1-131-992-11	s	CAP, CERAMIC 100000PF F 1608
C431	1-131-992-11	s	CAP, CERAMIC 100000PF F 1608
C432	1-131-992-11	s	CAP, CERAMIC 100000PF F 1608
C433	1-126-394-11	s	CAPACITOR,ELECT 10MF/16V(CHIP)
C434	1-126-394-11	s	CAPACITOR,ELECT 10MF/16V(CHIP)
C435	1-131-992-11	s	CAP, CERAMIC 100000PF F 1608
C437	1-131-992-11	s	CAP, CERAMIC 100000PF F 1608
C439	1-131-992-11	s	CAP, CERAMIC 100000PF F 1608
C440	1-131-992-11	s	CAP, CERAMIC 100000PF F 1608
C606	1-131-992-11	s	CAP, CERAMIC 100000PF F 1608
C607	1-126-394-11	s	CAPACITOR,ELECT 10MF/16V(CHIP)
C608	1-131-992-11	s	CAP, CERAMIC 100000PF F 1608
C609	1-131-992-11	s	CAP, CERAMIC 100000PF F 1608
C650	1-162-970-11	s	CAPACITOR CERAMIC 0.01MF/25V B
C651	1-162-970-11	s	CAPACITOR CERAMIC 0.01MF/25V B
C652	1-131-992-11	s	CAP, CERAMIC 100000PF F 1608
C653	1-131-992-11	s	CAP, CERAMIC 100000PF F 1608
C654	1-126-394-11	s	CAPACITOR,ELECT 10MF/16V(CHIP)
C655	1-131-992-11	s	CAP, CERAMIC 100000PF F 1608
C656	1-131-992-11	s	CAP, CERAMIC 100000PF F 1608
C657	1-131-992-11	s	CAP, CERAMIC 100000PF F 1608
C658	1-131-992-11	s	CAP, CERAMIC 100000PF F 1608
C659	1-131-992-11	s	CAP, CERAMIC 100000PF F 1608
C660	1-131-992-11	s	CAP, CERAMIC 100000PF F 1608
C661	1-131-992-11	s	CAP, CERAMIC 100000PF F 1608
C662	1-131-992-11	s	CAP, CERAMIC 100000PF F 1608
C663	1-126-394-11	s	CAPACITOR,ELECT 10MF/16V(CHIP)
C664	1-165-870-21	s	CAPACITOR, ELECT 100MF(6.3X6)
C665	1-126-394-11	s	CAPACITOR,ELECT 10MF/16V(CHIP)
C666	1-131-992-11	s	CAP, CERAMIC 100000PF F 1608
C667	1-131-992-11	s	CAP, CERAMIC 100000PF F 1608
C668	1-131-992-11	s	CAP, CERAMIC 100000PF F 1608
C669	1-131-992-11	s	CAP, CERAMIC 100000PF F 1608
C670	1-131-992-11	s	CAP, CERAMIC 100000PF F 1608
C671	1-131-992-11	s	CAP, CERAMIC 100000PF F 1608
C672	1-131-992-11	s	CAP, CERAMIC 100000PF F 1608
C673	1-131-992-11	s	CAP, CERAMIC 100000PF F 1608
C674	1-131-992-11	s	CAP, CERAMIC 100000PF F 1608
C675	1-131-992-11	s	CAP, CERAMIC 100000PF F 1608
C676	1-131-992-11	s	CAP, CERAMIC 100000PF F 1608
C677	1-131-992-11	s	CAP, CERAMIC 100000PF F 1608
C678	1-131-992-11	s	CAP, CERAMIC 100000PF F 1608
C679	1-131-992-11	s	CAP, CERAMIC 100000PF F 1608
C680	1-131-992-11	s	CAP, CERAMIC 100000PF F 1608
C681	1-131-992-11	s	CAP, CERAMIC 100000PF F 1608
C682	1-131-992-11	s	CAP, CERAMIC 100000PF F 1608
C683	1-131-992-11	s	CAP, CERAMIC 100000PF F 1608
C684	1-131-992-11	s	CAP, CERAMIC 100000PF F 1608
C685	1-162-925-11	s	CAPACITOR,CERAMIC 68PF/50V CH
C686	1-165-872-21	s	CAPACITOR,SOLID ELECT 47MF
C687	1-126-394-11	s	CAPACITOR,ELECT 10MF/16V(CHIP)
C688	1-126-394-11	s	CAPACITOR,ELECT 10MF/16V(CHIP)
C689	1-131-992-11	s	CAP, CERAMIC 100000PF F 1608
C690	1-131-992-11	s	CAP, CERAMIC 100000PF F 1608
C700	1-131-992-11	s	CAP, CERAMIC 100000PF F 1608

(DPR-229C BOARD [SUFFIX 14-])

Ref. No. or Q'ty	Part No.	SP	Description
C701	1-113-503-11	s	CAPACITOR,CERAMIC 3900PF CH
C702	1-162-968-11	s	CAPACITOR,CERAMIC 4700PF/50V B
C703	1-131-992-11	s	CAP, CERAMIC 100000PF F 1608
C704	1-131-992-11	s	CAP, CERAMIC 100000PF F 1608
C705	1-131-992-11	s	CAP, CERAMIC 100000PF F 1608
C706	1-131-992-11	s	CAP, CERAMIC 100000PF F 1608
C707	1-131-992-11	s	CAP, CERAMIC 100000PF F 1608
C708	1-131-992-11	s	CAP, CERAMIC 100000PF F 1608
C709	1-131-992-11	s	CAP, CERAMIC 100000PF F 1608
C710	1-131-992-11	s	CAP, CERAMIC 100000PF F 1608
C711	1-131-992-11	s	CAP, CERAMIC 100000PF F 1608
C712	1-131-992-11	s	CAP, CERAMIC 100000PF F 1608
C713	1-113-503-11	s	CAPACITOR,CERAMIC 3900PF CH
C714	1-162-968-11	s	CAPACITOR,CERAMIC 4700PF/50V B
C715	1-131-992-11	s	CAP, CERAMIC 100000PF F 1608
C716	1-131-992-11	s	CAP, CERAMIC 100000PF F 1608
C717	1-131-992-11	s	CAP, CERAMIC 100000PF F 1608
C718	1-131-992-11	s	CAP, CERAMIC 100000PF F 1608
C719	1-131-992-11	s	CAP, CERAMIC 100000PF F 1608
C720	1-131-992-11	s	CAP, CERAMIC 100000PF F 1608
C721	1-131-992-11	s	CAP, CERAMIC 100000PF F 1608
C722	1-131-992-11	s	CAP, CERAMIC 100000PF F 1608
C723	1-131-992-11	s	CAP, CERAMIC 100000PF F 1608
C724	1-131-992-11	s	CAP, CERAMIC 100000PF F 1608
C725	1-113-503-11	s	CAPACITOR,CERAMIC 3900PF CH
C726	1-162-968-11	s	CAPACITOR,CERAMIC 4700PF/50V B
C727	1-131-992-11	s	CAP, CERAMIC 100000PF F 1608
C728	1-131-992-11	s	CAP, CERAMIC 100000PF F 1608
C729	1-131-992-11	s	CAP, CERAMIC 100000PF F 1608
C730	1-131-992-11	s	CAP, CERAMIC 100000PF F 1608
C731	1-131-992-11	s	CAP, CERAMIC 100000PF F 1608
C732	1-131-992-11	s	CAP, CERAMIC 100000PF F 1608
C733	1-131-992-11	s	CAP, CERAMIC 100000PF F 1608
C734	1-131-992-11	s	CAP, CERAMIC 100000PF F 1608
C735	1-131-992-11	s	CAP, CERAMIC 100000PF F 1608
C736	1-131-992-11	s	CAP, CERAMIC 100000PF F 1608
C737	1-113-503-11	s	CAPACITOR,CERAMIC 3900PF CH
C738	1-162-968-11	s	CAPACITOR,CERAMIC 4700PF/50V B
C739	1-131-992-11	s	CAP, CERAMIC 100000PF F 1608
C740	1-131-992-11	s	CAP, CERAMIC 100000PF F 1608
C741	1-131-992-11	s	CAP, CERAMIC 100000PF F 1608
C742	1-131-992-11	s	CAP, CERAMIC 100000PF F 1608
C743	1-131-992-11	s	CAP, CERAMIC 100000PF F 1608
C744	1-131-992-11	s	CAP, CERAMIC 100000PF F 1608
C745	1-131-992-11	s	CAP, CERAMIC 100000PF F 1608
C746	1-131-992-11	s	CAP, CERAMIC 100000PF F 1608
C747	1-131-992-11	s	CAP, CERAMIC 100000PF F 1608
C748	1-131-992-11	s	CAP, CERAMIC 100000PF F 1608
C800	1-126-394-11	s	CAPACITOR,ELECT 10MF/16V(CHIP)
C801	1-131-992-11	s	CAP, CERAMIC 100000PF F 1608
C802	1-131-992-11	s	CAP, CERAMIC 100000PF F 1608
C803	1-131-992-11	s	CAP, CERAMIC 100000PF F 1608
C804	1-131-992-11	s	CAP, CERAMIC 100000PF F 1608
C810	1-131-992-11	s	CAP, CERAMIC 100000PF F 1608
C811	1-131-992-11	s	CAP, CERAMIC 100000PF F 1608
C812	1-128-590-11	s	CAPACITOR ELECT 100MF/6.3V(105
C813	1-128-590-11	s	CAPACITOR ELECT 100MF/6.3V(105
C814	1-131-992-11	s	CAP, CERAMIC 100000PF F 1608
C815	1-131-992-11	s	CAP, CERAMIC 100000PF F 1608

(DPR-229C BOARD [SUFFIX 14-])

Ref. No. or Q'ty	Part No.	SP	Description
C816	1-131-992-11	s	CAP, CERAMIC 100000PF F 1608
C817	1-131-992-11	s	CAP, CERAMIC 100000PF F 1608
C818	1-131-992-11	s	CAP, CERAMIC 100000PF F 1608
C819	1-128-590-11	s	CAPACITOR ELECT 100MF/6.3V(105
C820	1-128-590-11	s	CAPACITOR ELECT 100MF/6.3V(105
C821	1-128-590-11	s	CAPACITOR ELECT 100MF/6.3V(105
C822	1-128-590-11	s	CAPACITOR ELECT 100MF/6.3V(105
C823	1-131-992-11	s	CAP, CERAMIC 100000PF F 1608
C827	1-131-992-11	s	CAP, CERAMIC 100000PF F 1608
C829	1-131-992-11	s	CAP, CERAMIC 100000PF F 1608
C831	1-131-992-11	s	CAP, CERAMIC 100000PF F 1608
C832	1-131-992-11	s	CAP, CERAMIC 100000PF F 1608
C833	1-131-992-11	s	CAP, CERAMIC 100000PF F 1608
C834	1-131-992-11	s	CAP, CERAMIC 100000PF F 1608
C835	1-131-992-11	s	CAP, CERAMIC 100000PF F 1608
C837	1-131-992-11	s	CAP, CERAMIC 100000PF F 1608
C838	1-131-992-11	s	CAP, CERAMIC 100000PF F 1608
C839	1-126-394-11	s	CAPACITOR,ELECT 10MF/16V(CHIP)
C842	1-131-992-11	s	CAP, CERAMIC 100000PF F 1608
C843	1-131-992-11	s	CAP, CERAMIC 100000PF F 1608
C844	1-131-992-11	s	CAP, CERAMIC 100000PF F 1608
C845	1-131-992-11	s	CAP, CERAMIC 100000PF F 1608
C846	1-131-992-11	s	CAP, CERAMIC 100000PF F 1608
C847	1-131-992-11	s	CAP, CERAMIC 100000PF F 1608
C848	1-126-394-11	s	CAPACITOR,ELECT 10MF/16V(CHIP)
C849	1-126-394-11	s	CAPACITOR,ELECT 10MF/16V(CHIP)
C850	1-131-992-11	s	CAP, CERAMIC 100000PF F 1608
C851	1-131-992-11	s	CAP, CERAMIC 100000PF F 1608
C852	1-131-992-11	s	CAP, CERAMIC 100000PF F 1608
C853	1-126-394-11	s	CAPACITOR,ELECT 10MF/16V(CHIP)
C862	1-131-992-11	s	CAP, CERAMIC 100000PF F 1608
C863	1-131-992-11	s	CAP, CERAMIC 100000PF F 1608
C864	1-131-992-11	s	CAP, CERAMIC 100000PF F 1608
C865	1-131-992-11	s	CAP, CERAMIC 100000PF F 1608
C867	1-127-861-11	s	CAP, CERAMIC 2.2MF B (3216)
C868	1-127-861-11	s	CAP, CERAMIC 2.2MF B (3216)
C869	1-131-992-11	s	CAP, CERAMIC 100000PF F 1608
C912	1-131-992-11	s	CAP, CERAMIC 100000PF F 1608
C913	1-126-394-11	s	CAPACITOR,ELECT 10MF/16V(CHIP)
C914	1-126-394-11	s	CAPACITOR,ELECT 10MF/16V(CHIP)
C915	1-131-992-11	s	CAP, CERAMIC 100000PF F 1608
C916	1-131-992-11	s	CAP, CERAMIC 100000PF F 1608
C917	1-131-992-11	s	CAP, CERAMIC 100000PF F 1608
C918	1-131-992-11	s	CAP, CERAMIC 100000PF F 1608
C919	1-131-992-11	s	CAP, CERAMIC 100000PF F 1608
C920	1-131-992-11	s	CAP, CERAMIC 100000PF F 1608
C921	1-131-992-11	s	CAP, CERAMIC 100000PF F 1608
C922	1-131-992-11	s	CAP, CERAMIC 100000PF F 1608
C923	1-131-992-11	s	CAP, CERAMIC 100000PF F 1608
C924	1-131-992-11	s	CAP, CERAMIC 100000PF F 1608
C925	1-131-992-11	s	CAP, CERAMIC 100000PF F 1608
C926	1-131-992-11	s	CAP, CERAMIC 100000PF F 1608
C927	1-131-992-11	s	CAP, CERAMIC 100000PF F 1608
C928	1-131-992-11	s	CAP, CERAMIC 100000PF F 1608
C929	1-131-992-11	s	CAP, CERAMIC 100000PF F 1608
C930	1-131-992-11	s	CAP, CERAMIC 100000PF F 1608
C931	1-131-992-11	s	CAP, CERAMIC 100000PF F 1608
C932	1-131-992-11	s	CAP, CERAMIC 100000PF F 1608
C933	1-131-992-11	s	CAP, CERAMIC 100000PF F 1608

(DPR-229C BOARD [SUFFIX 14-])

Ref. No. or Q'ty	Part No.	SP	Description
C934	1-131-992-11	s	CAP, CERAMIC 100000PF F 1608
C935	1-131-992-11	s	CAP, CERAMIC 100000PF F 1608
C936	1-131-992-11	s	CAP, CERAMIC 100000PF F 1608
C937	1-131-992-11	s	CAP, CERAMIC 100000PF F 1608
C938	1-131-992-11	s	CAP, CERAMIC 100000PF F 1608
C939	1-131-992-11	s	CAP, CERAMIC 100000PF F 1608
CN16	1-580-789-91	s	PIN, CONNECTOR 6P
E100	1-535-877-22	s	CHIP,CHECKER (TEST POINT)
E200	1-535-877-22	s	CHIP,CHECKER (TEST POINT)
E300	1-535-877-22	s	CHIP,CHECKER (TEST POINT)
E400	1-535-877-22	s	CHIP,CHECKER (TEST POINT)
E401	1-535-877-22	s	CHIP,CHECKER (TEST POINT)
E600	1-535-877-22	s	CHIP,CHECKER (TEST POINT)
E700	1-535-877-22	s	CHIP,CHECKER (TEST POINT)
E800	1-535-877-22	s	CHIP,CHECKER (TEST POINT)
F800	⚠ 1-576-270-11	s	FUSE CHIP 4A/125V (6125)
F802	⚠ 1-576-270-11	s	FUSE CHIP 4A/125V (6125)
F803	⚠ 1-576-270-11	s	FUSE CHIP 4A/125V (6125)
FB200	1-469-094-21	s	FERRITE, EMI (SMD)
FL200	1-239-898-22	s	FILTER, EMI (SMD)
FL600	1-233-674-21	s	FILTER, EMI
FL601	1-233-674-21	s	FILTER, EMI
IC100	8-759-549-15	s	IC SN74LV245APWR
IC101	8-759-549-15	s	IC SN74LV245APWR
IC102	8-759-523-84	s	IC TC74VHC14FT (EL)
IC103	8-759-491-46	s	IC TC74VHCT04AFT (EL)
IC104	8-759-491-46	s	IC TC74VHCT04AFT (EL)
IC105	8-759-523-94	s	IC TC74VHC32FT(EL)
IC106	8-759-549-01	s	IC SN74LV125APWR
IC107	8-759-392-77	s	IC SN74LVC245APW (E20)
IC108	8-759-549-15	s	IC SN74LV245APWR
IC109	8-759-524-07	s	IC TC74VHC138FT(EL)
IC110	8-759-549-15	s	IC SN74LV245APWR
IC111	8-759-491-46	s	IC TC74VHCT04AFT (EL)
IC112	8-759-549-15	s	IC SN74LV245APWR
IC113	8-759-549-15	s	IC SN74LV245APWR
IC114	8-759-549-15	s	IC SN74LV245APWR
IC115	8-759-549-15	s	IC SN74LV245APWR
IC116	8-759-549-15	s	IC SN74LV245APWR
IC117	8-759-549-15	s	IC SN74LV245APWR
IC118	8-759-524-07	s	IC TC74VHC138FT(EL)
IC119	8-759-524-07	s	IC TC74VHC138FT(EL)
IC120	8-759-523-81	s	IC TC74VHC08FT(EL)
IC121	6-706-487-01	s	IC TC7SH08FU(T5RSOYJF)
IC122	8-759-523-92	s	IC TC74VHC21FT(EL)
IC123	8-759-549-15	s	IC SN74LV245APWR
IC124	8-752-392-03	s	IC CXD1095BR
IC125	6-706-487-01	s	IC TC7SH08FU(T5RSOYJF)
IC126	6-706-482-01	s	IC TC7SH00FU(T5RSOYJF)
IC200	8-759-475-55	s	IC TC74LCX574FT(EL)
IC201	8-759-475-55	s	IC TC74LCX574FT(EL)
IC202	8-759-475-55	s	IC TC74LCX574FT(EL)
IC203	8-759-669-41	s	IC SN74LVC125APWR-12
IC204	6-706-484-01	s	IC TC7SH04FU(T5RSOYJF)
IC205	8-759-669-41	s	IC SN74LVC125APWR-12
IC208	8-759-392-77	s	IC SN74LVC245APW (E20)

(DPR-229C BOARD [SUFFIX 14-])

Ref. No. or Q'ty	Part No.	SP	Description
IC209	8-759-392-77	s	IC SN74LVC245APW (E20)
IC210	8-759-392-77	s	IC SN74LVC245APW (E20)
IC212	8-759-712-32	s	IC SN65LVDS389DBTR
IC213	8-759-712-32	s	IC SN65LVDS389DBTR
IC214	8-759-712-32	s	IC SN65LVDS389DBTR
IC217	6-706-484-01	s	IC TC7SH04FU(T5RSOYJF)
IC301	8-759-449-09	s	IC CXD8945BR
IC302	8-759-524-10	s	IC TC74VHC157FT (EL)
IC303	8-759-524-10	s	IC TC74VHC157FT (EL)
IC307	6-700-497-01	s	IC MSM56V16800F-10TS-K
IC308	6-700-497-01	s	IC MSM56V16800F-10TS-K
IC309	6-700-497-01	s	IC MSM56V16800F-10TS-K
IC310	8-759-392-77	s	IC SN74LVC245APW (E20)
IC311	8-759-392-77	s	IC SN74LVC245APW (E20)
IC401	8-759-669-41	s	IC SN74LVC125APWR-12
IC402	8-759-712-31	s	IC SN65LVDT388DBTR
IC404	8-759-712-31	s	IC SN65LVDT388DBTR
IC406	8-759-639-86	s	IC SN65LVDS32DR
IC407	8-759-656-31	o	IC CXD9094AR
IC408	8-759-712-32	s	IC SN65LVDS389DBTR
IC410	8-759-712-32	s	IC SN65LVDS389DBTR
IC412	8-759-712-32	s	IC SN65LVDS389DBTR
IC413	8-759-639-86	s	IC SN65LVDS32DR
IC601	8-759-524-09	s	IC TC74VHC153FT (EL)
IC602	8-759-475-55	s	IC TC74LCX574FT(EL)
IC603	8-759-475-55	s	IC TC74LCX574FT(EL)
IC653	8-759-549-15	s	IC SN74LV245APWR
IC654	8-759-549-15	s	IC SN74LV245APWR
IC655	8-759-664-03	s	IC LP3964EMPX-ADJ
IC700	8-752-392-03	s	IC CXD1095BR
IC701	6-702-254-01	s	IC DSPB56362PV100-1J21D
IC702	8-759-543-83	s	IC KM416V1204CT-L6
IC703	8-759-543-83	s	IC KM416V1204CT-L6
IC704	6-702-254-01	s	IC DSPB56362PV100-1J21D
IC705	8-759-543-83	s	IC KM416V1204CT-L6
IC706	8-759-543-83	s	IC KM416V1204CT-L6
IC707	6-702-254-01	s	IC DSPB56362PV100-1J21D
IC708	8-759-543-83	s	IC KM416V1204CT-L6
IC709	8-759-543-83	s	IC KM416V1204CT-L6
IC710	6-702-254-01	s	IC DSPB56362PV100-1J21D
IC711	8-759-543-83	s	IC KM416V1204CT-L6
IC712	8-759-543-83	s	IC KM416V1204CT-L6
IC801	8-759-549-15	s	IC SN74LV245APWR
IC802	6-706-487-01	s	IC TC7SH08FU(T5RSOYJF)
IC803	8-759-491-46	s	IC TC74VHCT04AFT (EL)
IC804	8-759-669-41	s	IC SN74LVC125APWR-12
IC805	8-759-475-43	s	IC TC74LCX125FT(EL)
IC808	8-759-549-15	s	IC SN74LV245APWR
IC809	8-759-523-78	s	IC TC74VHC00FT(EL)
IC810	8-759-392-77	s	IC SN74LVC245APW (E20)
IC812	8-759-669-41	s	IC SN74LVC125APWR-12
IC813	8-759-669-41	s	IC SN74LVC125APWR-12
IC814	8-759-669-41	s	IC SN74LVC125APWR-12
IC815	8-759-475-43	s	IC TC74LCX125FT(EL)
IC817	8-759-549-01	s	IC SN74LV125APWR
IC818	8-759-549-15	s	IC SN74LV245APWR
IC819	8-759-524-10	s	IC TC74VHC157FT (EL)
IC822	8-759-549-01	s	IC SN74LV125APWR
IC823	8-759-549-15	s	IC SN74LV245APWR

(DPR-229C BOARD [SUFFIX 14-])

Ref. No. or Q'ty	Part No.	SP	Description
IC824	8-759-549-15	s	IC SN74LV245APWR
IC825	8-759-549-15	s	IC SN74LV245APWR
IC826	8-759-549-01	s	IC SN74LV125APWR
IC827	6-704-723-01	s	IC XCS20XL-4VQG100C
IC829	8-759-524-10	s	IC TC74VHC157FT (EL)
IC831	8-759-524-27	s	IC TC74VHC244FT(EL)
IC832	6-706-484-01	s	IC TC7SH04FU(T5RSOYJF)
IC833	6-803-242-02	s	IC XC18V02-DPR229IMX-V4.00
IC834	6-803-243-03	s	IC XC18V02-DPR229SX-V3.01
IC902	6-802-024-01	s	IC CXD9012BR
IC903	8-759-549-15	s	IC SN74LV245APWR
IC904	8-759-549-15	s	IC SN74LV245APWR
L100	1-412-056-11	s	INDUCTOR 4.7UH (3225)
L101	1-412-056-11	s	INDUCTOR 4.7UH (3225)
L102	1-412-056-11	s	INDUCTOR 4.7UH (3225)
L103	1-412-056-11	s	INDUCTOR 4.7UH (3225)
L200	1-412-056-11	s	INDUCTOR 4.7UH (3225)
L201	1-412-056-11	s	INDUCTOR 4.7UH (3225)
L202	1-412-056-11	s	INDUCTOR 4.7UH (3225)
L402	1-412-056-11	s	INDUCTOR 4.7UH (3225)
L405	1-412-056-11	s	INDUCTOR 4.7UH (3225)
L600	1-412-056-11	s	INDUCTOR 4.7UH (3225)
L651	1-412-056-11	s	INDUCTOR 4.7UH (3225)
L800	1-419-630-11	s	COIL, CHOKE 4.7UH
L801	1-419-630-11	s	COIL, CHOKE 4.7UH
L802	1-419-630-11	s	COIL, CHOKE 4.7UH
L803	1-419-630-11	s	COIL, CHOKE 4.7UH
L804	1-412-056-11	s	INDUCTOR 4.7UH (3225)
L806	1-412-056-11	s	INDUCTOR 4.7UH (3225)
L807	1-412-056-11	s	INDUCTOR 4.7UH (3225)
L808	1-412-056-11	s	INDUCTOR 4.7UH (3225)
Q200	8-729-928-81	s	TRANSISTOR DTC144EE
Q400	8-729-928-81	s	TRANSISTOR DTC144EE
Q800	8-729-928-81	s	TRANSISTOR DTC144EE
Q801	8-729-045-53	s	TRANSISTOR SI4431DY-T1
Q802	8-729-140-63	s	TRANSISTOR 2SA1611-M5M6
R100	1-218-895-11	s	RESISTOR,CHIP 100K 1/10W(1608)
R101	1-218-895-11	s	RESISTOR,CHIP 100K 1/10W(1608)
R102	1-218-895-11	s	RESISTOR,CHIP 100K 1/10W(1608)
R103	1-218-895-11	s	RESISTOR,CHIP 100K 1/10W(1608)
R105	1-218-895-11	s	RESISTOR,CHIP 100K 1/10W(1608)
R106	1-211-985-11	s	RESISTOR,CHIP 47 1/10W (1608)
R107	1-211-985-11	s	RESISTOR,CHIP 47 1/10W (1608)
R108	1-211-985-11	s	RESISTOR,CHIP 47 1/10W (1608)
R109	1-211-985-11	s	RESISTOR,CHIP 47 1/10W (1608)
R110	1-218-895-11	s	RESISTOR,CHIP 100K 1/10W(1608)
R111	1-218-823-11	s	RESISTOR,CHIP 100 1/10W (1608)
R115	1-218-895-11	s	RESISTOR,CHIP 100K 1/10W(1608)
R117	1-218-863-11	s	RESISTOR,CHIP 4.7K 1/10W(1608)
R118	1-218-863-11	s	RESISTOR,CHIP 4.7K 1/10W(1608)
R124	1-218-863-11	s	RESISTOR,CHIP 4.7K 1/10W(1608)
R126	1-218-863-11	s	RESISTOR,CHIP 4.7K 1/10W(1608)
R130	1-216-864-11	s	CONDUCTOR, CHIP (1608)
R131	1-216-864-11	s	CONDUCTOR, CHIP (1608)
R132	1-216-864-11	s	CONDUCTOR, CHIP (1608)
R133	1-216-864-11	s	CONDUCTOR, CHIP (1608)
R134	1-218-863-11	s	RESISTOR,CHIP 4.7K 1/10W(1608)
R136	1-211-977-11	s	RESISTOR,CHIP 22 1/10W (1608)

(DPR-229C BOARD [SUFFIX 14-])

Ref. No. or Q'ty	Part No.	SP	Description
R141	1-216-864-11	s	CONDUCTOR, CHIP (1608)
R143	1-218-895-11	s	RESISTOR,CHIP 100K 1/10W(1608)
R144	1-211-977-11	s	RESISTOR,CHIP 22 1/10W (1608)
R200	1-218-831-11	s	RESISTOR, CHIP 220 1/10W(1608)
R202	1-216-864-11	s	CONDUCTOR, CHIP (1608)
R203	1-211-985-11	s	RESISTOR,CHIP 47 1/10W (1608)
R204	1-211-977-11	s	RESISTOR,CHIP 22 1/10W (1608)
R207	1-216-864-11	s	CONDUCTOR, CHIP (1608)
R208	1-218-871-11	s	RESISTOR,CHIP 10K 1/10W (1608)
R209	1-216-864-11	s	CONDUCTOR, CHIP (1608)
R210	1-216-864-11	s	CONDUCTOR, CHIP (1608)
R212	1-216-864-11	s	CONDUCTOR, CHIP (1608)
R213	1-216-864-11	s	CONDUCTOR, CHIP (1608)
R215	1-216-864-11	s	CONDUCTOR, CHIP (1608)
R216	1-216-864-11	s	CONDUCTOR, CHIP (1608)
R217	1-216-864-11	s	CONDUCTOR, CHIP (1608)
R218	1-211-977-11	s	RESISTOR,CHIP 22 1/10W (1608)
R219	1-218-863-11	s	RESISTOR,CHIP 4.7K 1/10W(1608)
R220	1-216-864-11	s	CONDUCTOR, CHIP (1608)
R221	1-216-864-11	s	CONDUCTOR, CHIP (1608)
R222	1-218-863-11	s	RESISTOR,CHIP 4.7K 1/10W(1608)
R300	1-216-864-11	s	CONDUCTOR, CHIP (1608)
R301	1-216-864-11	s	CONDUCTOR, CHIP (1608)
R302	1-216-864-11	s	CONDUCTOR, CHIP (1608)
R303	1-218-863-11	s	RESISTOR,CHIP 4.7K 1/10W(1608)
R304	1-218-863-11	s	RESISTOR,CHIP 4.7K 1/10W(1608)
R305	1-218-863-11	s	RESISTOR,CHIP 4.7K 1/10W(1608)
R306	1-218-895-11	s	RESISTOR,CHIP 100K 1/10W(1608)
R307	1-218-863-11	s	RESISTOR,CHIP 4.7K 1/10W(1608)
R312	1-216-864-11	s	CONDUCTOR, CHIP (1608)
R313	1-216-864-11	s	CONDUCTOR, CHIP (1608)
R314	1-216-864-11	s	CONDUCTOR, CHIP (1608)
R315	1-216-864-11	s	CONDUCTOR, CHIP (1608)
R316	1-216-864-11	s	CONDUCTOR, CHIP (1608)
R317	1-218-895-11	s	RESISTOR,CHIP 100K 1/10W(1608)
R318	1-218-895-11	s	RESISTOR,CHIP 100K 1/10W(1608)
R319	1-218-895-11	s	RESISTOR,CHIP 100K 1/10W(1608)
R320	1-218-895-11	s	RESISTOR,CHIP 100K 1/10W(1608)
R321	1-218-895-11	s	RESISTOR,CHIP 100K 1/10W(1608)
R322	1-216-864-11	s	CONDUCTOR, CHIP (1608)
R323	1-216-864-11	s	CONDUCTOR, CHIP (1608)
R324	1-216-864-11	s	CONDUCTOR, CHIP (1608)
R325	1-216-864-11	s	CONDUCTOR, CHIP (1608)
R326	1-216-864-11	s	CONDUCTOR, CHIP (1608)
R327	1-216-864-11	s	CONDUCTOR, CHIP (1608)
R328	1-216-864-11	s	CONDUCTOR, CHIP (1608)
R329	1-216-864-11	s	CONDUCTOR, CHIP (1608)
R330	1-218-895-11	s	RESISTOR,CHIP 100K 1/10W(1608)
R331	1-216-864-11	s	CONDUCTOR, CHIP (1608)
R335	1-216-864-11	s	CONDUCTOR, CHIP (1608)
R338	1-218-863-11	s	RESISTOR,CHIP 4.7K 1/10W(1608)
R349	1-216-864-11	s	CONDUCTOR, CHIP (1608)
R351	1-211-977-11	s	RESISTOR,CHIP 22 1/10W (1608)
R352	1-211-977-11	s	RESISTOR,CHIP 22 1/10W (1608)
R353	1-218-863-11	s	RESISTOR,CHIP 4.7K 1/10W(1608)
R354	1-218-863-11	s	RESISTOR,CHIP 4.7K 1/10W(1608)
R355	1-218-863-11	s	RESISTOR,CHIP 4.7K 1/10W(1608)
R356	1-216-864-11	s	CONDUCTOR, CHIP (1608)
R359	1-211-977-11	s	RESISTOR,CHIP 22 1/10W (1608)

(DPR-229C BOARD [SUFFIX 14-])

Ref. No. or Q'ty	Part No.	SP	Description
R400	1-218-895-11	s	RESISTOR,CHIP 100K 1/10W(1608)
R402	1-211-985-11	s	RESISTOR,CHIP 47 1/10W (1608)
R403	1-211-985-11	s	RESISTOR,CHIP 47 1/10W (1608)
R421	1-218-823-11	s	RESISTOR,CHIP 100 1/10W (1608)
R422	1-218-823-11	s	RESISTOR,CHIP 100 1/10W (1608)
R423	1-218-823-11	s	RESISTOR,CHIP 100 1/10W (1608)
R424	1-218-823-11	s	RESISTOR,CHIP 100 1/10W (1608)
R428	1-218-823-11	s	RESISTOR,CHIP 100 1/10W (1608)
R429	1-218-823-11	s	RESISTOR,CHIP 100 1/10W (1608)
R430	1-218-823-11	s	RESISTOR,CHIP 100 1/10W (1608)
R431	1-218-823-11	s	RESISTOR,CHIP 100 1/10W (1608)
R432	1-211-977-11	s	RESISTOR,CHIP 22 1/10W (1608)
R433	1-211-977-11	s	RESISTOR,CHIP 22 1/10W (1608)
R434	1-211-977-11	s	RESISTOR,CHIP 22 1/10W (1608)
R435	1-216-864-11	s	CONDUCTOR, CHIP (1608)
R436	1-216-864-11	s	CONDUCTOR, CHIP (1608)
R437	1-211-985-11	s	RESISTOR,CHIP 47 1/10W (1608)
R439	1-216-864-11	s	CONDUCTOR, CHIP (1608)
R440	1-218-895-11	s	RESISTOR,CHIP 100K 1/10W(1608)
R442	1-211-985-11	s	RESISTOR,CHIP 47 1/10W (1608)
R443	1-218-863-11	s	RESISTOR,CHIP 4.7K 1/10W(1608)
R605	1-216-864-11	s	CONDUCTOR, CHIP (1608)
R606	1-216-864-11	s	CONDUCTOR, CHIP (1608)
R607	1-216-864-11	s	CONDUCTOR, CHIP (1608)
R619	1-218-895-11	s	RESISTOR,CHIP 100K 1/10W(1608)
R650	1-218-847-11	s	RESISTOR, CHIP 1K 1/10W (1608)
R652	1-216-864-11	s	CONDUCTOR, CHIP (1608)
R653	1-216-864-11	s	CONDUCTOR, CHIP (1608)
R654	1-216-864-11	s	CONDUCTOR, CHIP (1608)
R657	1-218-871-11	s	RESISTOR,CHIP 10K 1/10W (1608)
R658	1-216-864-11	s	CONDUCTOR, CHIP (1608)
R659	1-216-864-11	s	CONDUCTOR, CHIP (1608)
R660	1-216-864-11	s	CONDUCTOR, CHIP (1608)
R661	1-218-903-11	s	RESISTOR,CHIP 220K 1/10W(1608)
R662	1-218-878-11	s	RESISTOR,CHIP 20K 1/10W (1608)
R663	1-218-878-11	s	RESISTOR,CHIP 20K 1/10W (1608)
R666	1-211-990-11	s	RESISTOR,CHIP 75 1/10W (1608)
R668	1-211-990-11	s	RESISTOR,CHIP 75 1/10W (1608)
R670	1-218-903-11	s	RESISTOR,CHIP 220K 1/10W(1608)
R671	1-218-903-11	s	RESISTOR,CHIP 220K 1/10W(1608)
R672	1-218-871-11	s	RESISTOR,CHIP 10K 1/10W (1608)
R673	1-218-856-11	s	RESISTOR,CHIP 2.4K 1/10W(1608)
R674	1-218-871-11	s	RESISTOR,CHIP 10K 1/10W (1608)
R676	1-211-899-11	s	RESISTOR,CHIP 0.22 1/4W (3225)
R715	1-216-864-11	s	CONDUCTOR, CHIP (1608)
R716	1-216-864-11	s	CONDUCTOR, CHIP (1608)
R717	1-216-864-11	s	CONDUCTOR, CHIP (1608)
R718	1-216-864-11	s	CONDUCTOR, CHIP (1608)
R719	1-216-864-11	s	CONDUCTOR, CHIP (1608)
R720	1-216-864-11	s	CONDUCTOR, CHIP (1608)
R722	1-216-864-11	s	CONDUCTOR, CHIP (1608)
R723	1-216-864-11	s	CONDUCTOR, CHIP (1608)
R724	1-216-864-11	s	CONDUCTOR, CHIP (1608)
R725	1-216-864-11	s	CONDUCTOR, CHIP (1608)
R726	1-216-864-11	s	CONDUCTOR, CHIP (1608)
R727	1-216-864-11	s	CONDUCTOR, CHIP (1608)
R728	1-216-864-11	s	CONDUCTOR, CHIP (1608)
R729	1-216-864-11	s	CONDUCTOR, CHIP (1608)
R738	1-218-847-11	s	RESISTOR, CHIP 1K 1/10W (1608)

(DPR-229C BOARD [SUFFIX 14-])

Ref. No. or Q'ty	Part No.	SP	Description
R739	1-218-847-11	s	RESISTOR, CHIP 1K 1/10W (1608)
R740	1-218-847-11	s	RESISTOR, CHIP 1K 1/10W (1608)
R748	1-216-864-11	s	CONDUCTOR, CHIP (1608)
R749	1-216-864-11	s	CONDUCTOR, CHIP (1608)
R750	1-216-864-11	s	CONDUCTOR, CHIP (1608)
R751	1-216-864-11	s	CONDUCTOR, CHIP (1608)
R752	1-216-864-11	s	CONDUCTOR, CHIP (1608)
R753	1-216-864-11	s	CONDUCTOR, CHIP (1608)
R755	1-216-864-11	s	CONDUCTOR, CHIP (1608)
R756	1-216-864-11	s	CONDUCTOR, CHIP (1608)
R757	1-216-864-11	s	CONDUCTOR, CHIP (1608)
R758	1-216-864-11	s	CONDUCTOR, CHIP (1608)
R759	1-216-864-11	s	CONDUCTOR, CHIP (1608)
R760	1-216-864-11	s	CONDUCTOR, CHIP (1608)
R761	1-216-864-11	s	CONDUCTOR, CHIP (1608)
R762	1-216-864-11	s	CONDUCTOR, CHIP (1608)
R771	1-218-847-11	s	RESISTOR, CHIP 1K 1/10W (1608)
R772	1-218-847-11	s	RESISTOR, CHIP 1K 1/10W (1608)
R773	1-218-847-11	s	RESISTOR, CHIP 1K 1/10W (1608)
R781	1-216-864-11	s	CONDUCTOR, CHIP (1608)
R782	1-216-864-11	s	CONDUCTOR, CHIP (1608)
R783	1-216-864-11	s	CONDUCTOR, CHIP (1608)
R784	1-216-864-11	s	CONDUCTOR, CHIP (1608)
R785	1-216-864-11	s	CONDUCTOR, CHIP (1608)
R786	1-216-864-11	s	CONDUCTOR, CHIP (1608)
R788	1-216-864-11	s	CONDUCTOR, CHIP (1608)
R789	1-216-864-11	s	CONDUCTOR, CHIP (1608)
R790	1-216-864-11	s	CONDUCTOR, CHIP (1608)
R791	1-216-864-11	s	CONDUCTOR, CHIP (1608)
R792	1-216-864-11	s	CONDUCTOR, CHIP (1608)
R793	1-216-864-11	s	CONDUCTOR, CHIP (1608)
R794	1-216-864-11	s	CONDUCTOR, CHIP (1608)
R795	1-216-864-11	s	CONDUCTOR, CHIP (1608)
R801	1-216-864-11	s	CONDUCTOR, CHIP (1608)
R802	1-216-864-11	s	CONDUCTOR, CHIP (1608)
R803	1-218-863-11	s	RESISTOR,CHIP 4.7K 1/10W(1608)
R805	1-218-863-11	s	RESISTOR,CHIP 4.7K 1/10W(1608)
R811	1-216-864-11	s	CONDUCTOR, CHIP (1608)
R813	1-218-831-11	s	RESISTOR, CHIP 220 1/10W(1608)
R814	1-218-831-11	s	RESISTOR, CHIP 220 1/10W(1608)
R815	1-218-831-11	s	RESISTOR, CHIP 220 1/10W(1608)
R820	1-211-977-11	s	RESISTOR,CHIP 22 1/10W (1608)
R822	1-211-977-11	s	RESISTOR,CHIP 22 1/10W (1608)
R823	1-211-977-11	s	RESISTOR,CHIP 22 1/10W (1608)
R824	1-211-977-11	s	RESISTOR,CHIP 22 1/10W (1608)
R825	1-211-977-11	s	RESISTOR,CHIP 22 1/10W (1608)
R826	1-211-977-11	s	RESISTOR,CHIP 22 1/10W (1608)
R827	1-211-977-11	s	RESISTOR,CHIP 22 1/10W (1608)
R828	1-211-977-11	s	RESISTOR,CHIP 22 1/10W (1608)
R831	1-211-977-11	s	RESISTOR,CHIP 22 1/10W (1608)
R834	1-218-895-11	s	RESISTOR,CHIP 100K 1/10W(1608)
R835	1-218-895-11	s	RESISTOR,CHIP 100K 1/10W(1608)
R839	1-216-864-11	s	CONDUCTOR, CHIP (1608)
R841	1-211-977-11	s	RESISTOR,CHIP 22 1/10W (1608)
R854	1-211-977-11	s	RESISTOR,CHIP 22 1/10W (1608)
R855	1-211-977-11	s	RESISTOR,CHIP 22 1/10W (1608)
R856	1-211-977-11	s	RESISTOR,CHIP 22 1/10W (1608)
R857	1-211-977-11	s	RESISTOR,CHIP 22 1/10W (1608)
R858	1-211-977-11	s	RESISTOR,CHIP 22 1/10W (1608)

(DPR-229C BOARD [SUFFIX 14-])

Ref. No. or Q'ty	Part No.	SP	Description
R859	1-211-977-11	s	RESISTOR,CHIP 22 1/10W (1608)
R860	1-211-977-11	s	RESISTOR,CHIP 22 1/10W (1608)
R861	1-211-977-11	s	RESISTOR,CHIP 22 1/10W (1608)
R862	1-211-977-11	s	RESISTOR,CHIP 22 1/10W (1608)
R863	1-218-871-11	s	RESISTOR,CHIP 10K 1/10W (1608)
R864	1-218-847-11	s	RESISTOR, CHIP 1K 1/10W (1608)
R865	1-218-847-11	s	RESISTOR, CHIP 1K 1/10W (1608)
R866	1-218-835-11	s	RESISTOR,CHIP 330 1/10W (1608)
R867	1-218-835-11	s	RESISTOR,CHIP 330 1/10W (1608)
R903	1-218-849-11	s	RESISTOR,CHIP 1.2K 1/10W(1608)
R904	1-218-847-11	s	RESISTOR, CHIP 1K 1/10W (1608)
R905	1-216-864-11	s	CONDUCTOR, CHIP (1608)
R906	1-216-864-11	s	CONDUCTOR, CHIP (1608)
R907	1-216-864-11	s	CONDUCTOR, CHIP (1608)
R908	1-216-864-11	s	CONDUCTOR, CHIP (1608)
R909	1-218-895-11	s	RESISTOR,CHIP 100K 1/10W(1608)
R911	1-218-871-11	s	RESISTOR,CHIP 10K 1/10W (1608)
R912	1-218-835-11	s	RESISTOR,CHIP 330 1/10W (1608)
R913	1-216-864-11	s	CONDUCTOR, CHIP (1608)
R914	1-216-864-11	s	CONDUCTOR, CHIP (1608)
R915	1-218-895-11	s	RESISTOR,CHIP 100K 1/10W(1608)
R1004	1-218-847-11	s	RESISTOR, CHIP 1K 1/10W (1608)
R1005	1-218-847-11	s	RESISTOR, CHIP 1K 1/10W (1608)
R1006	1-218-847-11	s	RESISTOR, CHIP 1K 1/10W (1608)
R1014	1-216-864-11	s	CONDUCTOR, CHIP (1608)
R1015	1-216-864-11	s	CONDUCTOR, CHIP (1608)
R1016	1-216-864-11	s	CONDUCTOR, CHIP (1608)
R1017	1-216-864-11	s	CONDUCTOR, CHIP (1608)
R1018	1-216-864-11	s	CONDUCTOR, CHIP (1608)
R1019	1-216-864-11	s	CONDUCTOR, CHIP (1608)
R1021	1-216-864-11	s	CONDUCTOR, CHIP (1608)
R1022	1-216-864-11	s	CONDUCTOR, CHIP (1608)
R1023	1-216-864-11	s	CONDUCTOR, CHIP (1608)
R1024	1-216-864-11	s	CONDUCTOR, CHIP (1608)
R1025	1-216-864-11	s	CONDUCTOR, CHIP (1608)
R1026	1-216-864-11	s	CONDUCTOR, CHIP (1608)
R1027	1-216-864-11	s	CONDUCTOR, CHIP (1608)
R1028	1-216-864-11	s	CONDUCTOR, CHIP (1608)
R1037	1-216-864-11	s	CONDUCTOR, CHIP (1608)
R1038	1-216-864-11	s	CONDUCTOR, CHIP (1608)
R1039	1-216-864-11	s	CONDUCTOR, CHIP (1608)
R1040	1-216-864-11	s	CONDUCTOR, CHIP (1608)
R1042	1-218-847-11	s	RESISTOR, CHIP 1K 1/10W (1608)
R1043	1-218-847-11	s	RESISTOR, CHIP 1K 1/10W (1608)
R1044	1-218-847-11	s	RESISTOR, CHIP 1K 1/10W (1608)
R1052	1-218-895-11	s	RESISTOR,CHIP 100K 1/10W(1608)
R1053	1-218-895-11	s	RESISTOR,CHIP 100K 1/10W(1608)
R1054	1-216-864-11	s	CONDUCTOR, CHIP (1608)
R1055	1-216-864-11	s	CONDUCTOR, CHIP (1608)
R1056	1-216-864-11	s	CONDUCTOR, CHIP (1608)
RB100	1-233-810-21	s	RES, NETWORK 100K (3216)
RB101	1-233-810-21	s	RES, NETWORK 100K (3216)
RB102	1-239-409-11	s	RESISTOR NETWORK 47 (3216)
RB103	1-239-409-11	s	RESISTOR NETWORK 47 (3216)
RB104	1-233-810-21	s	RES, NETWORK 100K (3216)
RB106	1-234-397-11	s	NETWORK, RES (8 GANG) 100K
RB107	1-234-397-11	s	NETWORK, RES (8 GANG) 100K
RB108	1-233-575-11	s	RES, CHIP NETWORK 22
RB109	1-233-575-11	s	RES, CHIP NETWORK 22

(DPR-229C BOARD [SUFFIX 14-])

Ref. No. or Q'ty	Part No.	SP	Description
RB110	1-233-575-11	s	RES, CHIP NETWORK 22
RB111	1-233-575-11	s	RES, CHIP NETWORK 22
RB112	1-233-575-11	s	RES, CHIP NETWORK 22
RB113	1-234-397-11	s	NETWORK, RES (8 GANG) 100K
RB114	1-233-576-11	s	RESISTOR,CHIP NETWORK 100
RB115	1-233-576-11	s	RESISTOR,CHIP NETWORK 100
RB116	1-233-810-21	s	RES, NETWORK 100K (3216)
RB117	1-234-397-11	s	NETWORK, RES (8 GANG) 100K
RB118	1-234-397-11	s	NETWORK, RES (8 GANG) 100K
RB119	1-234-397-11	s	NETWORK, RES (8 GANG) 100K
RB120	1-234-397-11	s	NETWORK, RES (8 GANG) 100K
RB121	1-233-576-11	s	RESISTOR,CHIP NETWORK 100
RB122	1-233-576-11	s	RESISTOR,CHIP NETWORK 100
RB123	1-234-397-11	s	NETWORK, RES (8 GANG) 100K
RB200	1-233-411-11	s	RESISTOR,CHIP NETWORK 220/3216
RB201	1-233-411-11	s	RESISTOR,CHIP NETWORK 220/3216
RB202	1-233-411-11	s	RESISTOR,CHIP NETWORK 220/3216
RB203	1-233-411-11	s	RESISTOR,CHIP NETWORK 220/3216
RB204	1-233-411-11	s	RESISTOR,CHIP NETWORK 220/3216
RB205	1-233-575-11	s	RES, CHIP NETWORK 22
RB206	1-233-575-11	s	RES, CHIP NETWORK 22
RB213	1-239-409-11	s	RESISTOR NETWORK 47 (3216)
RB214	1-239-409-11	s	RESISTOR NETWORK 47 (3216)
RB215	1-239-409-11	s	RESISTOR NETWORK 47 (3216)
RB216	1-239-409-11	s	RESISTOR NETWORK 47 (3216)
RB217	1-239-409-11	s	RESISTOR NETWORK 47 (3216)
RB218	1-239-409-11	s	RESISTOR NETWORK 47 (3216)
RB400	1-239-409-11	s	RESISTOR NETWORK 47 (3216)
RB401	1-239-409-11	s	RESISTOR NETWORK 47 (3216)
RB402	1-239-409-11	s	RESISTOR NETWORK 47 (3216)
RB403	1-239-409-11	s	RESISTOR NETWORK 47 (3216)
RB404	1-239-409-11	s	RESISTOR NETWORK 47 (3216)
RB600	1-234-523-21	s	RESISTOR,CHIP NETWORK
RB601	1-234-523-21	s	RESISTOR,CHIP NETWORK
RB602	1-234-523-21	s	RESISTOR,CHIP NETWORK
RB700	1-233-810-21	s	RES, NETWORK 100K (3216)
RB701	1-233-810-21	s	RES, NETWORK 100K (3216)
RB702	1-233-810-21	s	RES, NETWORK 100K (3216)
RB703	1-233-810-21	s	RES, NETWORK 100K (3216)
RB704	1-233-810-21	s	RES, NETWORK 100K (3216)
RB705	1-233-810-21	s	RES, NETWORK 100K (3216)
RB706	1-233-810-21	s	RES, NETWORK 100K (3216)
RB707	1-233-810-21	s	RES, NETWORK 100K (3216)
RB708	1-233-810-21	s	RES, NETWORK 100K (3216)
RB709	1-234-397-11	s	NETWORK, RES (8 GANG) 100K
RB710	1-234-397-11	s	NETWORK, RES (8 GANG) 100K
RB711	1-234-397-11	s	NETWORK, RES (8 GANG) 100K
RB712	1-234-397-11	s	NETWORK, RES (8 GANG) 100K
RB801	1-233-810-21	s	RES, NETWORK 100K (3216)
RB804	1-233-411-11	s	RESISTOR,CHIP NETWORK 220/3216
RB805	1-233-411-11	s	RESISTOR,CHIP NETWORK 220/3216
RB806	1-233-411-11	s	RESISTOR,CHIP NETWORK 220/3216
RB807	1-233-414-11	s	RESISTOR,CHIP NETWORK 4.7K
RB808	1-239-409-11	s	RESISTOR NETWORK 47 (3216)
RB809	1-239-409-11	s	RESISTOR NETWORK 47 (3216)
RB810	1-239-409-11	s	RESISTOR NETWORK 47 (3216)
RB811	1-239-409-11	s	RESISTOR NETWORK 47 (3216)
RB812	1-239-409-11	s	RESISTOR NETWORK 47 (3216)
RB813	1-233-810-21	s	RES, NETWORK 100K (3216)

(DPR-229C BOARD [SUFFIX 14-])

Ref. No. or Q'ty	Part No.	SP	Description
RB814	1-233-810-21	s	RES, NETWORK 100K (3216)
RB815	1-233-810-21	s	RES, NETWORK 100K (3216)
RB816	1-233-810-21	s	RES, NETWORK 100K (3216)
RB817	1-233-414-11	s	RESISTOR,CHIP NETWORK 4.7K
RB818	1-236-908-11	s	RESISTOR,NETWORK 10K (3216)
X200	1-781-809-21	s	OSCILLATOR, CRYSTAL (SMD)

DPR-229HM BOARD [SUFFIX 14-]

[Lot No. 561 -] HDW-M2000/P, M2100/P

Ref. No. or Q'ty	Part No.	SP	Description
1pc	A-8346-101-A	s	MOUNTED CIRCUIT BOARD, DPR-229HM
1pc	3-179-084-11	s	LEVER (R), C BOARD
1pc	3-179-085-11	s	LEVER (L), C BOARD
C100	1-131-992-11	s	CAP, CERAMIC 100000PF F 1608
C101	1-131-992-11	s	CAP, CERAMIC 100000PF F 1608
C102	1-162-927-11	s	CAPACITOR,CERAMIC 100PF/50V CH
C103	1-126-394-11	s	CAPACITOR,ELECT 10MF/16V(CHIP)
C104	1-131-992-11	s	CAP, CERAMIC 100000PF F 1608
C105	1-131-992-11	s	CAP, CERAMIC 100000PF F 1608
C106	1-131-992-11	s	CAP, CERAMIC 100000PF F 1608
C107	1-131-992-11	s	CAP, CERAMIC 100000PF F 1608
C108	1-131-992-11	s	CAP, CERAMIC 100000PF F 1608
C109	1-131-992-11	s	CAP, CERAMIC 100000PF F 1608
C110	1-131-992-11	s	CAP, CERAMIC 100000PF F 1608
C111	1-131-992-11	s	CAP, CERAMIC 100000PF F 1608
C112	1-131-992-11	s	CAP, CERAMIC 100000PF F 1608
C113	1-131-992-11	s	CAP, CERAMIC 100000PF F 1608
C114	1-131-992-11	s	CAP, CERAMIC 100000PF F 1608
C115	1-131-992-11	s	CAP, CERAMIC 100000PF F 1608
C116	1-131-992-11	s	CAP, CERAMIC 100000PF F 1608
C117	1-131-992-11	s	CAP, CERAMIC 100000PF F 1608
C118	1-131-992-11	s	CAP, CERAMIC 100000PF F 1608
C119	1-131-992-11	s	CAP, CERAMIC 100000PF F 1608
C120	1-131-992-11	s	CAP, CERAMIC 100000PF F 1608
C121	1-131-992-11	s	CAP, CERAMIC 100000PF F 1608
C122	1-131-992-11	s	CAP, CERAMIC 100000PF F 1608
C123	1-131-992-11	s	CAP, CERAMIC 100000PF F 1608
C124	1-131-992-11	s	CAP, CERAMIC 100000PF F 1608
C125	1-131-992-11	s	CAP, CERAMIC 100000PF F 1608
C126	1-131-992-11	s	CAP, CERAMIC 100000PF F 1608
C127	1-131-992-11	s	CAP, CERAMIC 100000PF F 1608
C200	1-126-394-11	s	CAPACITOR,ELECT 10MF/16V(CHIP)
C201	1-131-992-11	s	CAP, CERAMIC 100000PF F 1608
C202	1-131-992-11	s	CAP, CERAMIC 100000PF F 1608
C203	1-131-992-11	s	CAP, CERAMIC 100000PF F 1608
C204	1-126-394-11	s	CAPACITOR,ELECT 10MF/16V(CHIP)
C205	1-131-992-11	s	CAP, CERAMIC 100000PF F 1608
C206	1-131-992-11	s	CAP, CERAMIC 100000PF F 1608
C207	1-126-394-11	s	CAPACITOR,ELECT 10MF/16V(CHIP)
C208	1-131-992-11	s	CAP, CERAMIC 100000PF F 1608
C209	1-131-992-11	s	CAP, CERAMIC 100000PF F 1608
C210	1-131-992-11	s	CAP, CERAMIC 100000PF F 1608
C211	1-127-692-91	s	CAP, CHIP CERAMIC 10MF B 3216
C212	1-127-692-91	s	CAP, CHIP CERAMIC 10MF B 3216
C213	1-131-992-11	s	CAP, CERAMIC 100000PF F 1608
C214	1-131-992-11	s	CAP, CERAMIC 100000PF F 1608
C215	1-131-992-11	s	CAP, CERAMIC 100000PF F 1608
C216	1-131-992-11	s	CAP, CERAMIC 100000PF F 1608
C217	1-131-992-11	s	CAP, CERAMIC 100000PF F 1608
C218	1-131-992-11	s	CAP, CERAMIC 100000PF F 1608
C219	1-131-992-11	s	CAP, CERAMIC 100000PF F 1608
C220	1-131-992-11	s	CAP, CERAMIC 100000PF F 1608
C221	1-131-992-11	s	CAP, CERAMIC 100000PF F 1608
C222	1-131-992-11	s	CAP, CERAMIC 100000PF F 1608
C223	1-131-992-11	s	CAP, CERAMIC 100000PF F 1608
C224	1-131-992-11	s	CAP, CERAMIC 100000PF F 1608
C225	1-131-992-11	s	CAP, CERAMIC 100000PF F 1608

(DPR-229HM BOARD [SUFFIX 14-])

Ref. No. or Q'ty	Part No.	SP	Description
C226	1-131-992-11	s	CAP, CERAMIC 100000PF F 1608
C227	1-131-992-11	s	CAP, CERAMIC 100000PF F 1608
C228	1-131-992-11	s	CAP, CERAMIC 100000PF F 1608
C230	1-126-394-11	s	CAPACITOR,ELECT 10MF/16V(CHIP)
C231	1-131-992-11	s	CAP, CERAMIC 100000PF F 1608
C232	1-131-992-11	s	CAP, CERAMIC 100000PF F 1608
C233	1-131-992-11	s	CAP, CERAMIC 100000PF F 1608
C234	1-131-992-11	s	CAP, CERAMIC 100000PF F 1608
C235	1-131-992-11	s	CAP, CERAMIC 100000PF F 1608
C300	1-131-992-11	s	CAP, CERAMIC 100000PF F 1608
C301	1-131-992-11	s	CAP, CERAMIC 100000PF F 1608
C302	1-131-992-11	s	CAP, CERAMIC 100000PF F 1608
C303	1-131-992-11	s	CAP, CERAMIC 100000PF F 1608
C304	1-126-394-11	s	CAPACITOR,ELECT 10MF/16V(CHIP)
C305	1-131-992-11	s	CAP, CERAMIC 100000PF F 1608
C306	1-131-992-11	s	CAP, CERAMIC 100000PF F 1608
C307	1-131-992-11	s	CAP, CERAMIC 100000PF F 1608
C308	1-131-992-11	s	CAP, CERAMIC 100000PF F 1608
C309	1-131-992-11	s	CAP, CERAMIC 100000PF F 1608
C310	1-131-992-11	s	CAP, CERAMIC 100000PF F 1608
C311	1-131-992-11	s	CAP, CERAMIC 100000PF F 1608
C312	1-131-992-11	s	CAP, CERAMIC 100000PF F 1608
C313	1-131-992-11	s	CAP, CERAMIC 100000PF F 1608
C314	1-126-394-11	s	CAPACITOR,ELECT 10MF/16V(CHIP)
C315	1-131-992-11	s	CAP, CERAMIC 100000PF F 1608
C316	1-131-992-11	s	CAP, CERAMIC 100000PF F 1608
C320	1-131-992-11	s	CAP, CERAMIC 100000PF F 1608
C321	1-131-992-11	s	CAP, CERAMIC 100000PF F 1608
C322	1-131-992-11	s	CAP, CERAMIC 100000PF F 1608
C323	1-131-992-11	s	CAP, CERAMIC 100000PF F 1608
C324	1-131-992-11	s	CAP, CERAMIC 100000PF F 1608
C325	1-131-992-11	s	CAP, CERAMIC 100000PF F 1608
C326	1-131-992-11	s	CAP, CERAMIC 100000PF F 1608
C327	1-131-992-11	s	CAP, CERAMIC 100000PF F 1608
C328	1-131-992-11	s	CAP, CERAMIC 100000PF F 1608
C329	1-131-992-11	s	CAP, CERAMIC 100000PF F 1608
C330	1-131-992-11	s	CAP, CERAMIC 100000PF F 1608
C331	1-126-394-11	s	CAPACITOR,ELECT 10MF/16V(CHIP)
C332	1-131-992-11	s	CAP, CERAMIC 100000PF F 1608
C333	1-131-992-11	s	CAP, CERAMIC 100000PF F 1608
C334	1-131-992-11	s	CAP, CERAMIC 100000PF F 1608
C335	1-131-992-11	s	CAP, CERAMIC 100000PF F 1608
C336	1-131-992-11	s	CAP, CERAMIC 100000PF F 1608
C337	1-131-992-11	s	CAP, CERAMIC 100000PF F 1608
C338	1-131-992-11	s	CAP, CERAMIC 100000PF F 1608
C339	1-131-992-11	s	CAP, CERAMIC 100000PF F 1608
C404	1-131-992-11	s	CAP, CERAMIC 100000PF F 1608
C412	1-126-394-11	s	CAPACITOR,ELECT 10MF/16V(CHIP)
C413	1-131-992-11	s	CAP, CERAMIC 100000PF F 1608
C418	1-126-394-11	s	CAPACITOR,ELECT 10MF/16V(CHIP)
C419	1-131-992-11	s	CAP, CERAMIC 100000PF F 1608
C420	1-131-992-11	s	CAP, CERAMIC 100000PF F 1608
C421	1-131-992-11	s	CAP, CERAMIC 100000PF F 1608
C422	1-131-992-11	s	CAP, CERAMIC 100000PF F 1608
C423	1-131-992-11	s	CAP, CERAMIC 100000PF F 1608
C424	1-131-992-11	s	CAP, CERAMIC 100000PF F 1608
C425	1-131-992-11	s	CAP, CERAMIC 100000PF F 1608
C426	1-131-992-11	s	CAP, CERAMIC 100000PF F 1608
C427	1-131-992-11	s	CAP, CERAMIC 100000PF F 1608

(DPR-229HM BOARD [SUFFIX 14-])

Ref. No. or Q'ty	Part No.	SP	Description
C428	1-131-992-11	s	CAP, CERAMIC 100000PF F 1608
C429	1-131-992-11	s	CAP, CERAMIC 100000PF F 1608
C430	1-131-992-11	s	CAP, CERAMIC 100000PF F 1608
C431	1-131-992-11	s	CAP, CERAMIC 100000PF F 1608
C432	1-131-992-11	s	CAP, CERAMIC 100000PF F 1608
C433	1-126-394-11	s	CAPACITOR,ELECT 10MF/16V(CHIP)
C440	1-131-992-11	s	CAP, CERAMIC 100000PF F 1608
C500	1-131-992-11	s	CAP, CERAMIC 100000PF F 1608
C501	1-131-992-11	s	CAP, CERAMIC 100000PF F 1608
C502	1-131-992-11	s	CAP, CERAMIC 100000PF F 1608
C503	1-131-992-11	s	CAP, CERAMIC 100000PF F 1608
C504	1-131-992-11	s	CAP, CERAMIC 100000PF F 1608
C505	1-131-992-11	s	CAP, CERAMIC 100000PF F 1608
C506	1-131-992-11	s	CAP, CERAMIC 100000PF F 1608
C507	1-131-992-11	s	CAP, CERAMIC 100000PF F 1608
C508	1-131-992-11	s	CAP, CERAMIC 100000PF F 1608
C509	1-131-992-11	s	CAP, CERAMIC 100000PF F 1608
C510	1-131-992-11	s	CAP, CERAMIC 100000PF F 1608
C511	1-131-992-11	s	CAP, CERAMIC 100000PF F 1608
C512	1-131-992-11	s	CAP, CERAMIC 100000PF F 1608
C513	1-131-992-11	s	CAP, CERAMIC 100000PF F 1608
C514	1-131-992-11	s	CAP, CERAMIC 100000PF F 1608
C515	1-131-992-11	s	CAP, CERAMIC 100000PF F 1608
C516	1-131-992-11	s	CAP, CERAMIC 100000PF F 1608
C517	1-131-992-11	s	CAP, CERAMIC 100000PF F 1608
C518	1-131-992-11	s	CAP, CERAMIC 100000PF F 1608
C519	1-131-992-11	s	CAP, CERAMIC 100000PF F 1608
C520	1-131-992-11	s	CAP, CERAMIC 100000PF F 1608
C521	1-131-992-11	s	CAP, CERAMIC 100000PF F 1608
C522	1-131-992-11	s	CAP, CERAMIC 100000PF F 1608
C523	1-126-394-11	s	CAPACITOR,ELECT 10MF/16V(CHIP)
C524	1-131-992-11	s	CAP, CERAMIC 100000PF F 1608
C525	1-131-992-11	s	CAP, CERAMIC 100000PF F 1608
C526	1-162-922-11	s	CAPACITOR,CERAMIC 39PF/50V CH
C527	1-131-992-11	s	CAP, CERAMIC 100000PF F 1608
C528	1-131-992-11	s	CAP, CERAMIC 100000PF F 1608
C529	1-131-992-11	s	CAP, CERAMIC 100000PF F 1608
C530	1-131-992-11	s	CAP, CERAMIC 100000PF F 1608
C531	1-131-992-11	s	CAP, CERAMIC 100000PF F 1608
C532	1-131-992-11	s	CAP, CERAMIC 100000PF F 1608
C533	1-131-992-11	s	CAP, CERAMIC 100000PF F 1608
C534	1-131-992-11	s	CAP, CERAMIC 100000PF F 1608
C535	1-131-992-11	s	CAP, CERAMIC 100000PF F 1608
C536	1-131-992-11	s	CAP, CERAMIC 100000PF F 1608
C537	1-131-992-11	s	CAP, CERAMIC 100000PF F 1608
C538	1-131-992-11	s	CAP, CERAMIC 100000PF F 1608
C539	1-131-992-11	s	CAP, CERAMIC 100000PF F 1608
C540	1-131-992-11	s	CAP, CERAMIC 100000PF F 1608
C541	1-131-992-11	s	CAP, CERAMIC 100000PF F 1608
C542	1-131-992-11	s	CAP, CERAMIC 100000PF F 1608
C543	1-131-992-11	s	CAP, CERAMIC 100000PF F 1608
C544	1-131-992-11	s	CAP, CERAMIC 100000PF F 1608
C545	1-131-992-11	s	CAP, CERAMIC 100000PF F 1608
C546	1-131-992-11	s	CAP, CERAMIC 100000PF F 1608
C547	1-131-992-11	s	CAP, CERAMIC 100000PF F 1608
C548	1-131-992-11	s	CAP, CERAMIC 100000PF F 1608
C549	1-131-992-11	s	CAP, CERAMIC 100000PF F 1608
C550	1-131-992-11	s	CAP, CERAMIC 100000PF F 1608
C551	1-131-992-11	s	CAP, CERAMIC 100000PF F 1608

(DPR-229HM BOARD [SUFFIX 14-])

Ref. No. or Q'ty	Part No.	SP	Description
C552	1-131-992-11	s	CAP, CERAMIC 100000PF F 1608
C606	1-131-992-11	s	CAP, CERAMIC 100000PF F 1608
C607	1-126-394-11	s	CAPACITOR,ELECT 10MF/16V(CHIP)
C608	1-131-992-11	s	CAP, CERAMIC 100000PF F 1608
C609	1-131-992-11	s	CAP, CERAMIC 100000PF F 1608
C650	1-162-970-11	s	CAPACITOR CERAMIC 0.01MF/25V B
C651	1-162-970-11	s	CAPACITOR CERAMIC 0.01MF/25V B
C652	1-131-992-11	s	CAP, CERAMIC 100000PF F 1608
C653	1-131-992-11	s	CAP, CERAMIC 100000PF F 1608
C654	1-126-394-11	s	CAPACITOR,ELECT 10MF/16V(CHIP)
C655	1-131-992-11	s	CAP, CERAMIC 100000PF F 1608
C656	1-131-992-11	s	CAP, CERAMIC 100000PF F 1608
C657	1-131-992-11	s	CAP, CERAMIC 100000PF F 1608
C658	1-131-992-11	s	CAP, CERAMIC 100000PF F 1608
C659	1-131-992-11	s	CAP, CERAMIC 100000PF F 1608
C660	1-131-992-11	s	CAP, CERAMIC 100000PF F 1608
C661	1-131-992-11	s	CAP, CERAMIC 100000PF F 1608
C662	1-131-992-11	s	CAP, CERAMIC 100000PF F 1608
C663	1-126-394-11	s	CAPACITOR,ELECT 10MF/16V(CHIP)
C664	1-165-870-21	s	CAPACITOR, ELECT 100MF(6.3X6)
C665	1-126-394-11	s	CAPACITOR,ELECT 10MF/16V(CHIP)
C666	1-131-992-11	s	CAP, CERAMIC 100000PF F 1608
C667	1-131-992-11	s	CAP, CERAMIC 100000PF F 1608
C668	1-131-992-11	s	CAP, CERAMIC 100000PF F 1608
C669	1-131-992-11	s	CAP, CERAMIC 100000PF F 1608
C670	1-131-992-11	s	CAP, CERAMIC 100000PF F 1608
C671	1-131-992-11	s	CAP, CERAMIC 100000PF F 1608
C672	1-131-992-11	s	CAP, CERAMIC 100000PF F 1608
C673	1-131-992-11	s	CAP, CERAMIC 100000PF F 1608
C674	1-131-992-11	s	CAP, CERAMIC 100000PF F 1608
C675	1-131-992-11	s	CAP, CERAMIC 100000PF F 1608
C676	1-131-992-11	s	CAP, CERAMIC 100000PF F 1608
C677	1-131-992-11	s	CAP, CERAMIC 100000PF F 1608
C678	1-131-992-11	s	CAP, CERAMIC 100000PF F 1608
C679	1-131-992-11	s	CAP, CERAMIC 100000PF F 1608
C680	1-131-992-11	s	CAP, CERAMIC 100000PF F 1608
C681	1-131-992-11	s	CAP, CERAMIC 100000PF F 1608
C682	1-131-992-11	s	CAP, CERAMIC 100000PF F 1608
C683	1-131-992-11	s	CAP, CERAMIC 100000PF F 1608
C684	1-131-992-11	s	CAP, CERAMIC 100000PF F 1608
C685	1-162-925-11	s	CAPACITOR,CERAMIC 68PF/50V CH
C686	1-165-872-21	s	CAPACITOR,SOLID ELECT 47MF
C687	1-126-394-11	s	CAPACITOR,ELECT 10MF/16V(CHIP)
C688	1-126-394-11	s	CAPACITOR,ELECT 10MF/16V(CHIP)
C689	1-131-992-11	s	CAP, CERAMIC 100000PF F 1608
C690	1-131-992-11	s	CAP, CERAMIC 100000PF F 1608
C700	1-131-992-11	s	CAP, CERAMIC 100000PF F 1608
C701	1-113-503-11	s	CAPACITOR,CERAMIC 3900PF CH
C702	1-162-968-11	s	CAPACITOR,CERAMIC 4700PF/50V B
C703	1-131-992-11	s	CAP, CERAMIC 100000PF F 1608
C704	1-131-992-11	s	CAP, CERAMIC 100000PF F 1608
C705	1-131-992-11	s	CAP, CERAMIC 100000PF F 1608
C706	1-131-992-11	s	CAP, CERAMIC 100000PF F 1608
C707	1-131-992-11	s	CAP, CERAMIC 100000PF F 1608
C708	1-131-992-11	s	CAP, CERAMIC 100000PF F 1608
C709	1-131-992-11	s	CAP, CERAMIC 100000PF F 1608
C710	1-131-992-11	s	CAP, CERAMIC 100000PF F 1608
C711	1-131-992-11	s	CAP, CERAMIC 100000PF F 1608
C712	1-131-992-11	s	CAP, CERAMIC 100000PF F 1608

(DPR-229HM BOARD [SUFFIX 14-])

Ref. No. or Q'ty	Part No.	SP	Description
C713	1-113-503-11	s	CAPACITOR,CERAMIC 3900PF CH
C714	1-162-968-11	s	CAPACITOR,CERAMIC 4700PF/50V B
C715	1-131-992-11	s	CAP, CERAMIC 100000PF F 1608
C716	1-131-992-11	s	CAP, CERAMIC 100000PF F 1608
C717	1-131-992-11	s	CAP, CERAMIC 100000PF F 1608
C718	1-131-992-11	s	CAP, CERAMIC 100000PF F 1608
C719	1-131-992-11	s	CAP, CERAMIC 100000PF F 1608
C720	1-131-992-11	s	CAP, CERAMIC 100000PF F 1608
C721	1-131-992-11	s	CAP, CERAMIC 100000PF F 1608
C722	1-131-992-11	s	CAP, CERAMIC 100000PF F 1608
C723	1-131-992-11	s	CAP, CERAMIC 100000PF F 1608
C724	1-131-992-11	s	CAP, CERAMIC 100000PF F 1608
C725	1-113-503-11	s	CAPACITOR,CERAMIC 3900PF CH
C726	1-162-968-11	s	CAPACITOR,CERAMIC 4700PF/50V B
C727	1-131-992-11	s	CAP, CERAMIC 100000PF F 1608
C728	1-131-992-11	s	CAP, CERAMIC 100000PF F 1608
C729	1-131-992-11	s	CAP, CERAMIC 100000PF F 1608
C730	1-131-992-11	s	CAP, CERAMIC 100000PF F 1608
C731	1-131-992-11	s	CAP, CERAMIC 100000PF F 1608
C732	1-131-992-11	s	CAP, CERAMIC 100000PF F 1608
C733	1-131-992-11	s	CAP, CERAMIC 100000PF F 1608
C734	1-131-992-11	s	CAP, CERAMIC 100000PF F 1608
C735	1-131-992-11	s	CAP, CERAMIC 100000PF F 1608
C736	1-131-992-11	s	CAP, CERAMIC 100000PF F 1608
C737	1-113-503-11	s	CAPACITOR,CERAMIC 3900PF CH
C738	1-162-968-11	s	CAPACITOR,CERAMIC 4700PF/50V B
C739	1-131-992-11	s	CAP, CERAMIC 100000PF F 1608
C740	1-131-992-11	s	CAP, CERAMIC 100000PF F 1608
C741	1-131-992-11	s	CAP, CERAMIC 100000PF F 1608
C742	1-131-992-11	s	CAP, CERAMIC 100000PF F 1608
C743	1-131-992-11	s	CAP, CERAMIC 100000PF F 1608
C744	1-131-992-11	s	CAP, CERAMIC 100000PF F 1608
C745	1-131-992-11	s	CAP, CERAMIC 100000PF F 1608
C746	1-131-992-11	s	CAP, CERAMIC 100000PF F 1608
C747	1-131-992-11	s	CAP, CERAMIC 100000PF F 1608
C748	1-131-992-11	s	CAP, CERAMIC 100000PF F 1608
C800	1-126-394-11	s	CAPACITOR,ELECT 10MF/16V(CHIP)
C801	1-131-992-11	s	CAP, CERAMIC 100000PF F 1608
C802	1-131-992-11	s	CAP, CERAMIC 100000PF F 1608
C803	1-131-992-11	s	CAP, CERAMIC 100000PF F 1608
C804	1-131-992-11	s	CAP, CERAMIC 100000PF F 1608
C810	1-131-992-11	s	CAP, CERAMIC 100000PF F 1608
C811	1-131-992-11	s	CAP, CERAMIC 100000PF F 1608
C812	1-128-590-11	s	CAPACITOR ELECT 100MF/6.3V(105
C813	1-128-590-11	s	CAPACITOR ELECT 100MF/6.3V(105
C814	1-131-992-11	s	CAP, CERAMIC 100000PF F 1608
C815	1-131-992-11	s	CAP, CERAMIC 100000PF F 1608
C816	1-131-992-11	s	CAP, CERAMIC 100000PF F 1608
C817	1-131-992-11	s	CAP, CERAMIC 100000PF F 1608
C818	1-131-992-11	s	CAP, CERAMIC 100000PF F 1608
C819	1-128-590-11	s	CAPACITOR ELECT 100MF/6.3V(105
C820	1-128-590-11	s	CAPACITOR ELECT 100MF/6.3V(105
C821	1-128-590-11	s	CAPACITOR ELECT 100MF/6.3V(105
C822	1-128-590-11	s	CAPACITOR ELECT 100MF/6.3V(105
C823	1-131-992-11	s	CAP, CERAMIC 100000PF F 1608
C827	1-131-992-11	s	CAP, CERAMIC 100000PF F 1608
C829	1-131-992-11	s	CAP, CERAMIC 100000PF F 1608
C831	1-131-992-11	s	CAP, CERAMIC 100000PF F 1608
C832	1-131-992-11	s	CAP, CERAMIC 100000PF F 1608

(DPR-229HM BOARD [SUFFIX 14-])

Ref. No. or Q'ty	Part No.	SP	Description
C833	1-131-992-11	s	CAP, CERAMIC 100000PF F 1608
C834	1-131-992-11	s	CAP, CERAMIC 100000PF F 1608
C835	1-131-992-11	s	CAP, CERAMIC 100000PF F 1608
C837	1-131-992-11	s	CAP, CERAMIC 100000PF F 1608
C838	1-131-992-11	s	CAP, CERAMIC 100000PF F 1608
C839	1-126-394-11	s	CAPACITOR,ELECT 10MF/16V(CHIP)
C842	1-131-992-11	s	CAP, CERAMIC 100000PF F 1608
C843	1-131-992-11	s	CAP, CERAMIC 100000PF F 1608
C844	1-131-992-11	s	CAP, CERAMIC 100000PF F 1608
C845	1-131-992-11	s	CAP, CERAMIC 100000PF F 1608
C846	1-131-992-11	s	CAP, CERAMIC 100000PF F 1608
C847	1-131-992-11	s	CAP, CERAMIC 100000PF F 1608
C848	1-126-394-11	s	CAPACITOR,ELECT 10MF/16V(CHIP)
C849	1-126-394-11	s	CAPACITOR,ELECT 10MF/16V(CHIP)
C850	1-131-992-11	s	CAP, CERAMIC 100000PF F 1608
C851	1-131-992-11	s	CAP, CERAMIC 100000PF F 1608
C852	1-131-992-11	s	CAP, CERAMIC 100000PF F 1608
C853	1-126-394-11	s	CAPACITOR,ELECT 10MF/16V(CHIP)
C862	1-131-992-11	s	CAP, CERAMIC 100000PF F 1608
C863	1-131-992-11	s	CAP, CERAMIC 100000PF F 1608
C864	1-131-992-11	s	CAP, CERAMIC 100000PF F 1608
C865	1-131-992-11	s	CAP, CERAMIC 100000PF F 1608
C867	1-127-861-11	s	CAP, CERAMIC 2.2MF B (3216)
C868	1-127-861-11	s	CAP, CERAMIC 2.2MF B (3216)
C869	1-131-992-11	s	CAP, CERAMIC 100000PF F 1608
C912	1-131-992-11	s	CAP, CERAMIC 100000PF F 1608
C913	1-126-394-11	s	CAPACITOR,ELECT 10MF/16V(CHIP)
C914	1-126-394-11	s	CAPACITOR,ELECT 10MF/16V(CHIP)
C915	1-131-992-11	s	CAP, CERAMIC 100000PF F 1608
C916	1-131-992-11	s	CAP, CERAMIC 100000PF F 1608
C917	1-131-992-11	s	CAP, CERAMIC 100000PF F 1608
C918	1-131-992-11	s	CAP, CERAMIC 100000PF F 1608
C919	1-131-992-11	s	CAP, CERAMIC 100000PF F 1608
C920	1-131-992-11	s	CAP, CERAMIC 100000PF F 1608
C921	1-131-992-11	s	CAP, CERAMIC 100000PF F 1608
C922	1-131-992-11	s	CAP, CERAMIC 100000PF F 1608
C923	1-131-992-11	s	CAP, CERAMIC 100000PF F 1608
C924	1-131-992-11	s	CAP, CERAMIC 100000PF F 1608
C925	1-131-992-11	s	CAP, CERAMIC 100000PF F 1608
C926	1-131-992-11	s	CAP, CERAMIC 100000PF F 1608
C927	1-131-992-11	s	CAP, CERAMIC 100000PF F 1608
C928	1-131-992-11	s	CAP, CERAMIC 100000PF F 1608
C929	1-131-992-11	s	CAP, CERAMIC 100000PF F 1608
C930	1-131-992-11	s	CAP, CERAMIC 100000PF F 1608
C931	1-131-992-11	s	CAP, CERAMIC 100000PF F 1608
C932	1-131-992-11	s	CAP, CERAMIC 100000PF F 1608
C933	1-131-992-11	s	CAP, CERAMIC 100000PF F 1608
C934	1-131-992-11	s	CAP, CERAMIC 100000PF F 1608
C935	1-131-992-11	s	CAP, CERAMIC 100000PF F 1608
C936	1-131-992-11	s	CAP, CERAMIC 100000PF F 1608
C937	1-131-992-11	s	CAP, CERAMIC 100000PF F 1608
C938	1-131-992-11	s	CAP, CERAMIC 100000PF F 1608
C939	1-131-992-11	s	CAP, CERAMIC 100000PF F 1608
CN16	1-580-789-91	s	PIN, CONNECTOR 6P
E100	1-535-877-22	s	CHIP,CHECKER (TEST POINT)
E200	1-535-877-22	s	CHIP,CHECKER (TEST POINT)
E300	1-535-877-22	s	CHIP,CHECKER (TEST POINT)
E400	1-535-877-22	s	CHIP,CHECKER (TEST POINT)

(DPR-229HM BOARD [SUFFIX 14-])

Ref. No. or Q'ty	Part No.	SP	Description
E401	1-535-877-22	s	CHIP,CHECKER (TEST POINT)
E500	1-535-877-22	s	CHIP,CHECKER (TEST POINT)
E600	1-535-877-22	s	CHIP,CHECKER (TEST POINT)
E700	1-535-877-22	s	CHIP,CHECKER (TEST POINT)
E800	1-535-877-22	s	CHIP,CHECKER (TEST POINT)
F800	⚠ 1-576-270-11	s	FUSE CHIP 4A/125V (6125)
F802	⚠ 1-576-270-11	s	FUSE CHIP 4A/125V (6125)
F803	⚠ 1-576-270-11	s	FUSE CHIP 4A/125V (6125)
FB200	1-469-094-21	s	FERRITE, EMI (SMD)
FL200	1-239-898-22	s	FILTER, EMI (SMD)
FL600	1-233-674-21	s	FILTER, EMI
FL601	1-233-674-21	s	FILTER, EMI
IC100	8-759-549-15	s	IC SN74LV245APWR
IC101	8-759-549-15	s	IC SN74LV245APWR
IC102	8-759-523-84	s	IC TC74VHC14FT (EL)
IC103	8-759-491-46	s	IC TC74VHCT04AFT (EL)
IC104	8-759-491-46	s	IC TC74VHCT04AFT (EL)
IC105	8-759-523-94	s	IC TC74VHC32FT(EL)
IC106	8-759-549-01	s	IC SN74LV125APWR
IC107	8-759-392-77	s	IC SN74LVC245APW (E20)
IC108	8-759-549-15	s	IC SN74LV245APWR
IC109	8-759-524-07	s	IC TC74VHC138FT(EL)
IC110	8-759-549-15	s	IC SN74LV245APWR
IC111	8-759-491-46	s	IC TC74VHCT04AFT (EL)
IC112	8-759-549-15	s	IC SN74LV245APWR
IC113	8-759-549-15	s	IC SN74LV245APWR
IC114	8-759-549-15	s	IC SN74LV245APWR
IC115	8-759-549-15	s	IC SN74LV245APWR
IC116	8-759-549-15	s	IC SN74LV245APWR
IC117	8-759-549-15	s	IC SN74LV245APWR
IC118	8-759-524-07	s	IC TC74VHC138FT(EL)
IC119	8-759-524-07	s	IC TC74VHC138FT(EL)
IC120	8-759-523-81	s	IC TC74VHC08FT(EL)
IC121	6-706-487-01	s	IC TC7SH08FU(T5RSOYJF)
IC122	8-759-523-92	s	IC TC74VHC21FT(EL)
IC123	8-759-549-15	s	IC SN74LV245APWR
IC124	8-752-392-03	s	IC CXD1095BR
IC125	6-706-487-01	s	IC TC7SH08FU(T5RSOYJF)
IC126	6-706-482-01	s	IC TC7SH00FU(T5RSOYJF)
IC200	8-759-475-55	s	IC TC74LCX574FT(EL)
IC201	8-759-475-55	s	IC TC74LCX574FT(EL)
IC202	8-759-475-55	s	IC TC74LCX574FT(EL)
IC203	8-759-669-41	s	IC SN74LVC125APWR-12
IC204	6-706-484-01	s	IC TC7SH04FU(T5RSOYJF)
IC205	8-759-669-41	s	IC SN74LVC125APWR-12
IC208	8-759-392-77	s	IC SN74LVC245APW (E20)
IC209	8-759-392-77	s	IC SN74LVC245APW (E20)
IC210	8-759-392-77	s	IC SN74LVC245APW (E20)
IC211	6-705-983-01	s	IC IS42S32200B-6TL-TR
IC212	8-759-712-32	s	IC SN65LVDS389DBTR
IC213	8-759-712-32	s	IC SN65LVDS389DBTR
IC214	8-759-712-32	s	IC SN65LVDS389DBTR
IC217	6-706-484-01	s	IC TC7SH04FU(T5RSOYJF)
IC301	8-759-449-09	s	IC CXD8945BR
IC302	8-759-524-10	s	IC TC74VHC157FT (EL)
IC303	8-759-524-10	s	IC TC74VHC157FT (EL)
IC307	6-700-497-01	s	IC MSM56V16800F-10TS-K

(DPR-229HM BOARD [SUFFIX 14-])

Ref. No. or Q'ty	Part No.	SP	Description
IC308	6-700-497-01	s	IC MSM56V16800F-10TS-K
IC309	6-700-497-01	s	IC MSM56V16800F-10TS-K
IC310	8-759-392-77	s	IC SN74LVC245APW (E20)
IC311	8-759-392-77	s	IC SN74LVC245APW (E20)
IC312	6-705-983-01	s	IC IS42S32200B-6TL-TR
IC401	8-759-669-41	s	IC SN74LVC125APWR-12
IC407	8-759-656-31	o	IC CXD9094AR
IC413	8-759-639-86	s	IC SN65LVDS32DR
IC500	8-759-199-86	s	IC CXD8807BR
IC501	8-759-549-15	s	IC SN74LV245APWR
IC502	8-759-549-15	s	IC SN74LV245APWR
IC506	8-752-373-24	s	IC CXK48324R-1-T6
IC507	8-752-373-24	s	IC CXK48324R-1-T6
IC508	8-752-373-24	s	IC CXK48324R-1-T6
IC509	8-752-373-24	s	IC CXK48324R-1-T6
IC510	8-752-373-24	s	IC CXK48324R-1-T6
IC601	8-759-524-09	s	IC TC74VHC153FT (EL)
IC602	8-759-475-55	s	IC TC74LCX574FT(EL)
IC603	8-759-475-55	s	IC TC74LCX574FT(EL)
IC653	8-759-549-15	s	IC SN74LV245APWR
IC654	8-759-549-15	s	IC SN74LV245APWR
IC655	8-759-664-03	s	IC LP3964EMPX-ADJ
IC700	8-752-392-03	s	IC CXD1095BR
IC701	6-702-254-01	s	IC DSPB56362PV100-1J21D
IC702	8-759-543-83	s	IC KM416V1204CT-L6
IC703	8-759-543-83	s	IC KM416V1204CT-L6
IC704	6-702-254-01	s	IC DSPB56362PV100-1J21D
IC705	8-759-543-83	s	IC KM416V1204CT-L6
IC706	8-759-543-83	s	IC KM416V1204CT-L6
IC707	6-702-254-01	s	IC DSPB56362PV100-1J21D
IC708	8-759-543-83	s	IC KM416V1204CT-L6
IC709	8-759-543-83	s	IC KM416V1204CT-L6
IC710	6-702-254-01	s	IC DSPB56362PV100-1J21D
IC711	8-759-543-83	s	IC KM416V1204CT-L6
IC712	8-759-543-83	s	IC KM416V1204CT-L6
IC801	8-759-549-15	s	IC SN74LV245APWR
IC802	6-706-487-01	s	IC TC7SH08FU(T5RSOYJF)
IC803	8-759-491-46	s	IC TC74VHCT04AFT (EL)
IC804	8-759-669-41	s	IC SN74LVC125APWR-12
IC805	8-759-475-43	s	IC TC74LCX125FT(EL)
IC808	8-759-549-15	s	IC SN74LV245APWR
IC809	8-759-523-78	s	IC TC74VHC00FT(EL)
IC810	8-759-392-77	s	IC SN74LVC245APW (E20)
IC812	8-759-669-41	s	IC SN74LVC125APWR-12
IC813	8-759-669-41	s	IC SN74LVC125APWR-12
IC814	8-759-669-41	s	IC SN74LVC125APWR-12
IC815	8-759-475-43	s	IC TC74LCX125FT(EL)
IC817	8-759-549-01	s	IC SN74LV125APWR
IC818	8-759-549-15	s	IC SN74LV245APWR
IC819	8-759-524-10	s	IC TC74VHC157FT (EL)
IC822	8-759-549-01	s	IC SN74LV125APWR
IC823	8-759-549-15	s	IC SN74LV245APWR
IC824	8-759-549-15	s	IC SN74LV245APWR
IC825	8-759-549-15	s	IC SN74LV245APWR
IC826	8-759-549-01	s	IC SN74LV125APWR
IC827	6-704-723-01	s	IC XCS20XL-4VQG100C
IC829	8-759-524-10	s	IC TC74VHC157FT (EL)
IC831	8-759-524-27	s	IC TC74VHC244FT(EL)
IC832	6-706-484-01	s	IC TC7SH04FU(T5RSOYJF)

(DPR-229HM BOARD [SUFFIX 14-])

Ref. No. or Q'ty	Part No.	SP	Description
IC833	6-803-242-02	s	IC XC18V02-DPR229IMX-V4.00
IC834	6-803-243-03	s	IC XC18V02-DPR229SX-V3.01
IC902	6-802-024-01	s	IC CXD9012BR
IC903	8-759-549-15	s	IC SN74LV245APWR
IC904	8-759-549-15	s	IC SN74LV245APWR
IC905	6-705-983-01	s	IC IS42S32200B-6TL-TR
L100	1-412-056-11	s	INDUCTOR 4.7UH (3225)
L101	1-412-056-11	s	INDUCTOR 4.7UH (3225)
L102	1-412-056-11	s	INDUCTOR 4.7UH (3225)
L103	1-412-056-11	s	INDUCTOR 4.7UH (3225)
L200	1-412-056-11	s	INDUCTOR 4.7UH (3225)
L201	1-412-056-11	s	INDUCTOR 4.7UH (3225)
L202	1-412-056-11	s	INDUCTOR 4.7UH (3225)
L402	1-412-056-11	s	INDUCTOR 4.7UH (3225)
L600	1-412-056-11	s	INDUCTOR 4.7UH (3225)
L651	1-412-056-11	s	INDUCTOR 4.7UH (3225)
L800	1-419-630-11	s	COIL, CHOKE 4.7UH
L801	1-419-630-11	s	COIL, CHOKE 4.7UH
L802	1-419-630-11	s	COIL, CHOKE 4.7UH
L803	1-419-630-11	s	COIL, CHOKE 4.7UH
L804	1-412-056-11	s	INDUCTOR 4.7UH (3225)
L806	1-412-056-11	s	INDUCTOR 4.7UH (3225)
L807	1-412-056-11	s	INDUCTOR 4.7UH (3225)
L808	1-412-056-11	s	INDUCTOR 4.7UH (3225)
Q200	8-729-928-81	s	TRANSISTOR DTC144EE
Q800	8-729-928-81	s	TRANSISTOR DTC144EE
Q801	8-729-045-53	s	TRANSISTOR SI4431DY-T1
Q802	8-729-140-63	s	TRANSISTOR 2SA1611-M5M6
R100	1-218-895-11	s	RESISTOR,CHIP 100K 1/10W(1608)
R101	1-218-895-11	s	RESISTOR,CHIP 100K 1/10W(1608)
R102	1-218-895-11	s	RESISTOR,CHIP 100K 1/10W(1608)
R103	1-218-895-11	s	RESISTOR,CHIP 100K 1/10W(1608)
R105	1-218-895-11	s	RESISTOR,CHIP 100K 1/10W(1608)
R106	1-211-985-11	s	RESISTOR,CHIP 47 1/10W (1608)
R107	1-211-985-11	s	RESISTOR,CHIP 47 1/10W (1608)
R108	1-211-985-11	s	RESISTOR,CHIP 47 1/10W (1608)
R109	1-211-985-11	s	RESISTOR,CHIP 47 1/10W (1608)
R110	1-218-895-11	s	RESISTOR,CHIP 100K 1/10W(1608)
R111	1-218-823-11	s	RESISTOR,CHIP 100 1/10W (1608)
R117	1-218-863-11	s	RESISTOR,CHIP 4.7K 1/10W(1608)
R118	1-218-863-11	s	RESISTOR,CHIP 4.7K 1/10W(1608)
R122	1-218-863-11	s	RESISTOR,CHIP 4.7K 1/10W(1608)
R124	1-218-863-11	s	RESISTOR,CHIP 4.7K 1/10W(1608)
R125	1-218-863-11	s	RESISTOR,CHIP 4.7K 1/10W(1608)
R126	1-218-863-11	s	RESISTOR,CHIP 4.7K 1/10W(1608)
R130	1-216-864-11	s	CONDUCTOR, CHIP (1608)
R131	1-216-864-11	s	CONDUCTOR, CHIP (1608)
R132	1-216-864-11	s	CONDUCTOR, CHIP (1608)
R133	1-216-864-11	s	CONDUCTOR, CHIP (1608)
R134	1-218-863-11	s	RESISTOR,CHIP 4.7K 1/10W(1608)
R136	1-211-977-11	s	RESISTOR,CHIP 22 1/10W (1608)
R141	1-216-864-11	s	CONDUCTOR, CHIP (1608)
R143	1-218-895-11	s	RESISTOR,CHIP 100K 1/10W(1608)
R144	1-211-977-11	s	RESISTOR,CHIP 22 1/10W (1608)
R200	1-218-831-11	s	RESISTOR, CHIP 220 1/10W(1608)
R202	1-216-864-11	s	CONDUCTOR, CHIP (1608)
R203	1-211-985-11	s	RESISTOR,CHIP 47 1/10W (1608)
R204	1-211-977-11	s	RESISTOR,CHIP 22 1/10W (1608)

(DPR-229HM BOARD [SUFFIX 14-])

Ref. No. or Q'ty	Part No.	SP	Description
R207	1-216-864-11	s	CONDUCTOR, CHIP (1608)
R208	1-218-871-11	s	RESISTOR,CHIP 10K 1/10W (1608)
R209	1-216-864-11	s	CONDUCTOR, CHIP (1608)
R210	1-216-864-11	s	CONDUCTOR, CHIP (1608)
R212	1-216-864-11	s	CONDUCTOR, CHIP (1608)
R213	1-216-864-11	s	CONDUCTOR, CHIP (1608)
R215	1-216-864-11	s	CONDUCTOR, CHIP (1608)
R216	1-216-864-11	s	CONDUCTOR, CHIP (1608)
R217	1-216-864-11	s	CONDUCTOR, CHIP (1608)
R218	1-211-977-11	s	RESISTOR,CHIP 22 1/10W (1608)
R219	1-218-863-11	s	RESISTOR,CHIP 4.7K 1/10W(1608)
R220	1-216-864-11	s	CONDUCTOR, CHIP (1608)
R221	1-216-864-11	s	CONDUCTOR, CHIP (1608)
R222	1-218-863-11	s	RESISTOR,CHIP 4.7K 1/10W(1608)
R300	1-216-864-11	s	CONDUCTOR, CHIP (1608)
R301	1-216-864-11	s	CONDUCTOR, CHIP (1608)
R302	1-216-864-11	s	CONDUCTOR, CHIP (1608)
R303	1-218-863-11	s	RESISTOR,CHIP 4.7K 1/10W(1608)
R304	1-218-863-11	s	RESISTOR,CHIP 4.7K 1/10W(1608)
R305	1-218-863-11	s	RESISTOR,CHIP 4.7K 1/10W(1608)
R306	1-218-895-11	s	RESISTOR,CHIP 100K 1/10W(1608)
R307	1-218-863-11	s	RESISTOR,CHIP 4.7K 1/10W(1608)
R312	1-216-864-11	s	CONDUCTOR, CHIP (1608)
R313	1-216-864-11	s	CONDUCTOR, CHIP (1608)
R314	1-216-864-11	s	CONDUCTOR, CHIP (1608)
R315	1-216-864-11	s	CONDUCTOR, CHIP (1608)
R316	1-216-864-11	s	CONDUCTOR, CHIP (1608)
R317	1-218-895-11	s	RESISTOR,CHIP 100K 1/10W(1608)
R318	1-218-895-11	s	RESISTOR,CHIP 100K 1/10W(1608)
R319	1-218-895-11	s	RESISTOR,CHIP 100K 1/10W(1608)
R320	1-218-895-11	s	RESISTOR,CHIP 100K 1/10W(1608)
R321	1-218-895-11	s	RESISTOR,CHIP 100K 1/10W(1608)
R322	1-216-864-11	s	CONDUCTOR, CHIP (1608)
R323	1-216-864-11	s	CONDUCTOR, CHIP (1608)
R324	1-216-864-11	s	CONDUCTOR, CHIP (1608)
R325	1-216-864-11	s	CONDUCTOR, CHIP (1608)
R326	1-216-864-11	s	CONDUCTOR, CHIP (1608)
R327	1-216-864-11	s	CONDUCTOR, CHIP (1608)
R328	1-216-864-11	s	CONDUCTOR, CHIP (1608)
R329	1-216-864-11	s	CONDUCTOR, CHIP (1608)
R330	1-218-895-11	s	RESISTOR,CHIP 100K 1/10W(1608)
R331	1-216-864-11	s	CONDUCTOR, CHIP (1608)
R335	1-216-864-11	s	CONDUCTOR, CHIP (1608)
R338	1-218-863-11	s	RESISTOR,CHIP 4.7K 1/10W(1608)
R349	1-216-864-11	s	CONDUCTOR, CHIP (1608)
R351	1-211-977-11	s	RESISTOR,CHIP 22 1/10W (1608)
R352	1-211-977-11	s	RESISTOR,CHIP 22 1/10W (1608)
R353	1-218-863-11	s	RESISTOR,CHIP 4.7K 1/10W(1608)
R354	1-218-863-11	s	RESISTOR,CHIP 4.7K 1/10W(1608)
R355	1-218-863-11	s	RESISTOR,CHIP 4.7K 1/10W(1608)
R356	1-216-864-11	s	CONDUCTOR, CHIP (1608)
R359	1-211-977-11	s	RESISTOR,CHIP 22 1/10W (1608)
R400	1-218-895-11	s	RESISTOR,CHIP 100K 1/10W(1608)
R402	1-211-985-11	s	RESISTOR,CHIP 47 1/10W (1608)
R403	1-211-985-11	s	RESISTOR,CHIP 47 1/10W (1608)
R428	1-218-823-11	s	RESISTOR,CHIP 100 1/10W (1608)
R429	1-218-823-11	s	RESISTOR,CHIP 100 1/10W (1608)
R430	1-218-823-11	s	RESISTOR,CHIP 100 1/10W (1608)
R431	1-218-823-11	s	RESISTOR,CHIP 100 1/10W (1608)

(DPR-229HM BOARD [SUFFIX 14-])

Ref. No. or Q'ty	Part No.	SP	Description
R432	1-211-977-11	s	RESISTOR,CHIP 22 1/10W (1608)
R433	1-211-977-11	s	RESISTOR,CHIP 22 1/10W (1608)
R434	1-211-977-11	s	RESISTOR,CHIP 22 1/10W (1608)
R435	1-216-864-11	s	CONDUCTOR, CHIP (1608)
R436	1-216-864-11	s	CONDUCTOR, CHIP (1608)
R437	1-211-985-11	s	RESISTOR,CHIP 47 1/10W (1608)
R439	1-216-864-11	s	CONDUCTOR, CHIP (1608)
R440	1-218-895-11	s	RESISTOR,CHIP 100K 1/10W(1608)
R502	1-216-864-11	s	CONDUCTOR, CHIP (1608)
R503	1-216-864-11	s	CONDUCTOR, CHIP (1608)
R605	1-216-864-11	s	CONDUCTOR, CHIP (1608)
R606	1-216-864-11	s	CONDUCTOR, CHIP (1608)
R607	1-216-864-11	s	CONDUCTOR, CHIP (1608)
R650	1-218-847-11	s	RESISTOR, CHIP 1K 1/10W (1608)
R652	1-216-864-11	s	CONDUCTOR, CHIP (1608)
R653	1-216-864-11	s	CONDUCTOR, CHIP (1608)
R654	1-216-864-11	s	CONDUCTOR, CHIP (1608)
R657	1-218-871-11	s	RESISTOR,CHIP 10K 1/10W (1608)
R658	1-216-864-11	s	CONDUCTOR, CHIP (1608)
R659	1-216-864-11	s	CONDUCTOR, CHIP (1608)
R660	1-216-864-11	s	CONDUCTOR, CHIP (1608)
R661	1-218-903-11	s	RESISTOR,CHIP 220K 1/10W(1608)
R662	1-218-878-11	s	RESISTOR,CHIP 20K 1/10W (1608)
R663	1-218-878-11	s	RESISTOR,CHIP 20K 1/10W (1608)
R666	1-211-990-11	s	RESISTOR,CHIP 75 1/10W (1608)
R668	1-211-990-11	s	RESISTOR,CHIP 75 1/10W (1608)
R670	1-218-903-11	s	RESISTOR,CHIP 220K 1/10W(1608)
R671	1-218-903-11	s	RESISTOR,CHIP 220K 1/10W(1608)
R672	1-218-871-11	s	RESISTOR,CHIP 10K 1/10W (1608)
R673	1-218-856-11	s	RESISTOR,CHIP 2.4K 1/10W(1608)
R674	1-218-871-11	s	RESISTOR,CHIP 10K 1/10W (1608)
R676	1-211-899-11	s	RESISTOR,CHIP 0.22 1/4W (3225)
R715	1-216-864-11	s	CONDUCTOR, CHIP (1608)
R716	1-216-864-11	s	CONDUCTOR, CHIP (1608)
R717	1-216-864-11	s	CONDUCTOR, CHIP (1608)
R718	1-216-864-11	s	CONDUCTOR, CHIP (1608)
R719	1-216-864-11	s	CONDUCTOR, CHIP (1608)
R720	1-216-864-11	s	CONDUCTOR, CHIP (1608)
R722	1-216-864-11	s	CONDUCTOR, CHIP (1608)
R723	1-216-864-11	s	CONDUCTOR, CHIP (1608)
R724	1-216-864-11	s	CONDUCTOR, CHIP (1608)
R725	1-216-864-11	s	CONDUCTOR, CHIP (1608)
R726	1-216-864-11	s	CONDUCTOR, CHIP (1608)
R727	1-216-864-11	s	CONDUCTOR, CHIP (1608)
R728	1-216-864-11	s	CONDUCTOR, CHIP (1608)
R729	1-216-864-11	s	CONDUCTOR, CHIP (1608)
R738	1-218-847-11	s	RESISTOR, CHIP 1K 1/10W (1608)
R739	1-218-847-11	s	RESISTOR, CHIP 1K 1/10W (1608)
R740	1-218-847-11	s	RESISTOR, CHIP 1K 1/10W (1608)
R748	1-216-864-11	s	CONDUCTOR, CHIP (1608)
R749	1-216-864-11	s	CONDUCTOR, CHIP (1608)
R750	1-216-864-11	s	CONDUCTOR, CHIP (1608)
R751	1-216-864-11	s	CONDUCTOR, CHIP (1608)
R752	1-216-864-11	s	CONDUCTOR, CHIP (1608)
R753	1-216-864-11	s	CONDUCTOR, CHIP (1608)
R755	1-216-864-11	s	CONDUCTOR, CHIP (1608)
R756	1-216-864-11	s	CONDUCTOR, CHIP (1608)
R757	1-216-864-11	s	CONDUCTOR, CHIP (1608)
R758	1-216-864-11	s	CONDUCTOR, CHIP (1608)

(DPR-229HM BOARD [SUFFIX 14-])

Ref. No. or Q'ty	Part No.	SP	Description
R759	1-216-864-11	s	CONDUCTOR, CHIP (1608)
R760	1-216-864-11	s	CONDUCTOR, CHIP (1608)
R761	1-216-864-11	s	CONDUCTOR, CHIP (1608)
R762	1-216-864-11	s	CONDUCTOR, CHIP (1608)
R771	1-218-847-11	s	RESISTOR, CHIP 1K 1/10W (1608)
R772	1-218-847-11	s	RESISTOR, CHIP 1K 1/10W (1608)
R773	1-218-847-11	s	RESISTOR, CHIP 1K 1/10W (1608)
R781	1-216-864-11	s	CONDUCTOR, CHIP (1608)
R782	1-216-864-11	s	CONDUCTOR, CHIP (1608)
R783	1-216-864-11	s	CONDUCTOR, CHIP (1608)
R784	1-216-864-11	s	CONDUCTOR, CHIP (1608)
R785	1-216-864-11	s	CONDUCTOR, CHIP (1608)
R786	1-216-864-11	s	CONDUCTOR, CHIP (1608)
R788	1-216-864-11	s	CONDUCTOR, CHIP (1608)
R789	1-216-864-11	s	CONDUCTOR, CHIP (1608)
R790	1-216-864-11	s	CONDUCTOR, CHIP (1608)
R791	1-216-864-11	s	CONDUCTOR, CHIP (1608)
R792	1-216-864-11	s	CONDUCTOR, CHIP (1608)
R793	1-216-864-11	s	CONDUCTOR, CHIP (1608)
R794	1-216-864-11	s	CONDUCTOR, CHIP (1608)
R795	1-216-864-11	s	CONDUCTOR, CHIP (1608)
R801	1-216-864-11	s	CONDUCTOR, CHIP (1608)
R802	1-216-864-11	s	CONDUCTOR, CHIP (1608)
R803	1-218-863-11	s	RESISTOR,CHIP 4.7K 1/10W(1608)
R805	1-218-863-11	s	RESISTOR,CHIP 4.7K 1/10W(1608)
R811	1-216-864-11	s	CONDUCTOR, CHIP (1608)
R813	1-218-831-11	s	RESISTOR, CHIP 220 1/10W(1608)
R814	1-218-831-11	s	RESISTOR, CHIP 220 1/10W(1608)
R815	1-218-831-11	s	RESISTOR, CHIP 220 1/10W(1608)
R820	1-211-977-11	s	RESISTOR,CHIP 22 1/10W (1608)
R822	1-211-977-11	s	RESISTOR,CHIP 22 1/10W (1608)
R823	1-211-977-11	s	RESISTOR,CHIP 22 1/10W (1608)
R824	1-211-977-11	s	RESISTOR,CHIP 22 1/10W (1608)
R825	1-211-977-11	s	RESISTOR,CHIP 22 1/10W (1608)
R826	1-211-977-11	s	RESISTOR,CHIP 22 1/10W (1608)
R827	1-211-977-11	s	RESISTOR,CHIP 22 1/10W (1608)
R828	1-211-977-11	s	RESISTOR,CHIP 22 1/10W (1608)
R831	1-211-977-11	s	RESISTOR,CHIP 22 1/10W (1608)
R834	1-218-895-11	s	RESISTOR,CHIP 100K 1/10W(1608)
R835	1-218-895-11	s	RESISTOR,CHIP 100K 1/10W(1608)
R839	1-216-864-11	s	CONDUCTOR, CHIP (1608)
R841	1-211-977-11	s	RESISTOR,CHIP 22 1/10W (1608)
R854	1-211-977-11	s	RESISTOR,CHIP 22 1/10W (1608)
R855	1-211-977-11	s	RESISTOR,CHIP 22 1/10W (1608)
R856	1-211-977-11	s	RESISTOR,CHIP 22 1/10W (1608)
R857	1-211-977-11	s	RESISTOR,CHIP 22 1/10W (1608)
R858	1-211-977-11	s	RESISTOR,CHIP 22 1/10W (1608)
R859	1-211-977-11	s	RESISTOR,CHIP 22 1/10W (1608)
R860	1-211-977-11	s	RESISTOR,CHIP 22 1/10W (1608)
R861	1-211-977-11	s	RESISTOR,CHIP 22 1/10W (1608)
R862	1-211-977-11	s	RESISTOR,CHIP 22 1/10W (1608)
R863	1-218-871-11	s	RESISTOR,CHIP 10K 1/10W (1608)
R864	1-218-847-11	s	RESISTOR, CHIP 1K 1/10W (1608)
R865	1-218-847-11	s	RESISTOR, CHIP 1K 1/10W (1608)
R866	1-218-835-11	s	RESISTOR,CHIP 330 1/10W (1608)
R867	1-218-835-11	s	RESISTOR,CHIP 330 1/10W (1608)
R903	1-218-849-11	s	RESISTOR,CHIP 1.2K 1/10W(1608)
R904	1-218-847-11	s	RESISTOR, CHIP 1K 1/10W (1608)
R905	1-216-864-11	s	CONDUCTOR, CHIP (1608)

(DPR-229HM BOARD [SUFFIX 14-])

Ref. No. or Q'ty	Part No.	SP	Description
R906	1-216-864-11	s	CONDUCTOR, CHIP (1608)
R907	1-216-864-11	s	CONDUCTOR, CHIP (1608)
R908	1-216-864-11	s	CONDUCTOR, CHIP (1608)
R909	1-218-895-11	s	RESISTOR,CHIP 100K 1/10W(1608)
R911	1-218-871-11	s	RESISTOR,CHIP 10K 1/10W (1608)
R912	1-218-835-11	s	RESISTOR,CHIP 330 1/10W (1608)
R913	1-216-864-11	s	CONDUCTOR, CHIP (1608)
R914	1-216-864-11	s	CONDUCTOR, CHIP (1608)
R915	1-218-895-11	s	RESISTOR,CHIP 100K 1/10W(1608)
R1004	1-218-847-11	s	RESISTOR, CHIP 1K 1/10W (1608)
R1005	1-218-847-11	s	RESISTOR, CHIP 1K 1/10W (1608)
R1006	1-218-847-11	s	RESISTOR, CHIP 1K 1/10W (1608)
R1014	1-216-864-11	s	CONDUCTOR, CHIP (1608)
R1015	1-216-864-11	s	CONDUCTOR, CHIP (1608)
R1016	1-216-864-11	s	CONDUCTOR, CHIP (1608)
R1017	1-216-864-11	s	CONDUCTOR, CHIP (1608)
R1018	1-216-864-11	s	CONDUCTOR, CHIP (1608)
R1019	1-216-864-11	s	CONDUCTOR, CHIP (1608)
R1021	1-216-864-11	s	CONDUCTOR, CHIP (1608)
R1022	1-216-864-11	s	CONDUCTOR, CHIP (1608)
R1023	1-216-864-11	s	CONDUCTOR, CHIP (1608)
R1024	1-216-864-11	s	CONDUCTOR, CHIP (1608)
R1025	1-216-864-11	s	CONDUCTOR, CHIP (1608)
R1026	1-216-864-11	s	CONDUCTOR, CHIP (1608)
R1027	1-216-864-11	s	CONDUCTOR, CHIP (1608)
R1028	1-216-864-11	s	CONDUCTOR, CHIP (1608)
R1037	1-216-864-11	s	CONDUCTOR, CHIP (1608)
R1038	1-216-864-11	s	CONDUCTOR, CHIP (1608)
R1039	1-216-864-11	s	CONDUCTOR, CHIP (1608)
R1040	1-216-864-11	s	CONDUCTOR, CHIP (1608)
R1042	1-218-847-11	s	RESISTOR, CHIP 1K 1/10W (1608)
R1043	1-218-847-11	s	RESISTOR, CHIP 1K 1/10W (1608)
R1044	1-218-847-11	s	RESISTOR, CHIP 1K 1/10W (1608)
R1052	1-218-895-11	s	RESISTOR,CHIP 100K 1/10W(1608)
R1053	1-218-895-11	s	RESISTOR,CHIP 100K 1/10W(1608)
R1054	1-216-864-11	s	CONDUCTOR, CHIP (1608)
R1055	1-216-864-11	s	CONDUCTOR, CHIP (1608)
R1056	1-216-864-11	s	CONDUCTOR, CHIP (1608)
RB100	1-233-810-21	s	RES, NETWORK 100K (3216)
RB101	1-233-810-21	s	RES, NETWORK 100K (3216)
RB102	1-239-409-11	s	RESISTOR NETWORK 47 (3216)
RB103	1-239-409-11	s	RESISTOR NETWORK 47 (3216)
RB104	1-233-810-21	s	RES, NETWORK 100K (3216)
RB106	1-234-397-11	s	NETWORK, RES (8 GANG) 100K
RB107	1-234-397-11	s	NETWORK, RES (8 GANG) 100K
RB108	1-233-575-11	s	RES, CHIP NETWORK 22
RB109	1-233-575-11	s	RES, CHIP NETWORK 22
RB110	1-233-575-11	s	RES, CHIP NETWORK 22
RB111	1-233-575-11	s	RES, CHIP NETWORK 22
RB112	1-233-575-11	s	RES, CHIP NETWORK 22
RB113	1-234-397-11	s	NETWORK, RES (8 GANG) 100K
RB114	1-233-576-11	s	RESISTOR,CHIP NETWORK 100
RB115	1-233-576-11	s	RESISTOR,CHIP NETWORK 100
RB116	1-233-810-21	s	RES, NETWORK 100K (3216)
RB117	1-234-397-11	s	NETWORK, RES (8 GANG) 100K
RB118	1-234-397-11	s	NETWORK, RES (8 GANG) 100K
RB119	1-234-397-11	s	NETWORK, RES (8 GANG) 100K
RB120	1-234-397-11	s	NETWORK, RES (8 GANG) 100K

(DPR-229HM BOARD [SUFFIX 14-])

Ref. No. or Q'ty	Part No.	SP	Description
RB121	1-233-576-11	s	RESISTOR,CHIP NETWORK 100
RB122	1-233-576-11	s	RESISTOR,CHIP NETWORK 100
RB123	1-234-397-11	s	NETWORK, RES (8 GANG) 100K
RB200	1-233-411-11	s	RESISTOR,CHIP NETWORK 220/3216
RB201	1-233-411-11	s	RESISTOR,CHIP NETWORK 220/3216
RB202	1-233-411-11	s	RESISTOR,CHIP NETWORK 220/3216
RB203	1-233-411-11	s	RESISTOR,CHIP NETWORK 220/3216
RB204	1-233-411-11	s	RESISTOR,CHIP NETWORK 220/3216
RB205	1-233-575-11	s	RES, CHIP NETWORK 22
RB206	1-233-575-11	s	RES, CHIP NETWORK 22
RB213	1-239-409-11	s	RESISTOR NETWORK 47 (3216)
RB214	1-239-409-11	s	RESISTOR NETWORK 47 (3216)
RB215	1-239-409-11	s	RESISTOR NETWORK 47 (3216)
RB216	1-239-409-11	s	RESISTOR NETWORK 47 (3216)
RB217	1-239-409-11	s	RESISTOR NETWORK 47 (3216)
RB218	1-239-409-11	s	RESISTOR NETWORK 47 (3216)
RB500	1-233-414-11	s	RESISTOR,CHIP NETWORK 4.7K
RB501	1-233-412-11	s	RESISTOR,CHIP NETWORK 1K
RB502	1-233-412-11	s	RESISTOR,CHIP NETWORK 1K
RB503	1-233-412-11	s	RESISTOR,CHIP NETWORK 1K
RB504	1-233-412-11	s	RESISTOR,CHIP NETWORK 1K
RB505	1-233-412-11	s	RESISTOR,CHIP NETWORK 1K
RB506	1-233-412-11	s	RESISTOR,CHIP NETWORK 1K
RB507	1-233-412-11	s	RESISTOR,CHIP NETWORK 1K
RB508	1-233-412-11	s	RESISTOR,CHIP NETWORK 1K
RB509	1-233-412-11	s	RESISTOR,CHIP NETWORK 1K
RB510	1-233-412-11	s	RESISTOR,CHIP NETWORK 1K
RB511	1-233-412-11	s	RESISTOR,CHIP NETWORK 1K
RB512	1-233-412-11	s	RESISTOR,CHIP NETWORK 1K
RB513	1-233-412-11	s	RESISTOR,CHIP NETWORK 1K
RB514	1-233-412-11	s	RESISTOR,CHIP NETWORK 1K
RB515	1-233-412-11	s	RESISTOR,CHIP NETWORK 1K
RB516	1-234-523-21	s	RESISTOR,CHIP NETWORK
RB517	1-234-523-21	s	RESISTOR,CHIP NETWORK
RB518	1-234-523-21	s	RESISTOR,CHIP NETWORK
RB600	1-234-523-21	s	RESISTOR,CHIP NETWORK
RB601	1-234-523-21	s	RESISTOR,CHIP NETWORK
RB602	1-234-523-21	s	RESISTOR,CHIP NETWORK
RB700	1-233-810-21	s	RES, NETWORK 100K (3216)
RB701	1-233-810-21	s	RES, NETWORK 100K (3216)
RB702	1-233-810-21	s	RES, NETWORK 100K (3216)
RB703	1-233-810-21	s	RES, NETWORK 100K (3216)
RB704	1-233-810-21	s	RES, NETWORK 100K (3216)
RB705	1-233-810-21	s	RES, NETWORK 100K (3216)
RB706	1-233-810-21	s	RES, NETWORK 100K (3216)
RB707	1-233-810-21	s	RES, NETWORK 100K (3216)
RB708	1-233-810-21	s	RES, NETWORK 100K (3216)
RB709	1-234-397-11	s	NETWORK, RES (8 GANG) 100K
RB710	1-234-397-11	s	NETWORK, RES (8 GANG) 100K
RB711	1-234-397-11	s	NETWORK, RES (8 GANG) 100K
RB712	1-234-397-11	s	NETWORK, RES (8 GANG) 100K
RB801	1-233-810-21	s	RES, NETWORK 100K (3216)
RB804	1-233-411-11	s	RESISTOR,CHIP NETWORK 220/3216
RB805	1-233-411-11	s	RESISTOR,CHIP NETWORK 220/3216
RB806	1-233-411-11	s	RESISTOR,CHIP NETWORK 220/3216
RB807	1-233-414-11	s	RESISTOR,CHIP NETWORK 4.7K
RB808	1-239-409-11	s	RESISTOR NETWORK 47 (3216)
RB809	1-239-409-11	s	RESISTOR NETWORK 47 (3216)
RB810	1-239-409-11	s	RESISTOR NETWORK 47 (3216)

(DPR-229HM BOARD [SUFFIX 14-])

Ref. No. or Q'ty	Part No.	SP	Description
RB811	1-239-409-11	s	RESISTOR NETWORK 47 (3216)
RB812	1-239-409-11	s	RESISTOR NETWORK 47 (3216)
RB813	1-233-810-21	s	RES, NETWORK 100K (3216)
RB814	1-233-810-21	s	RES, NETWORK 100K (3216)
RB815	1-233-810-21	s	RES, NETWORK 100K (3216)
RB816	1-233-810-21	s	RES, NETWORK 100K (3216)
RB817	1-233-414-11	s	RESISTOR,CHIP NETWORK 4.7K
RB818	1-236-908-11	s	RESISTOR,NETWORK 10K (3216)
X200	1-781-809-21	s	OSCILLATOR, CRYSTAL (SMD)

DPR-229M BOARD [SUFFIX 14-]

[Lot No. 561 -] MSW-M2000/P, M2000E/P, M2100/P, M2100E/P

Ref. No. or Q'ty	Part No.	SP	Description
1pc	A-8346-097-A	s	MOUNTED CIRCUIT BOARD, DPR-229M
1pc	3-179-084-11	s	LEVER (R), C BOARD
1pc	3-179-085-11	s	LEVER (L), C BOARD
C100	1-131-992-11	s	CAP, CERAMIC 100000PF F 1608
C101	1-131-992-11	s	CAP, CERAMIC 100000PF F 1608
C102	1-162-927-11	s	CAPACITOR,CERAMIC 100PF/50V CH
C103	1-126-394-11	s	CAPACITOR,ELECT 10MF/16V(CHIP)
C104	1-131-992-11	s	CAP, CERAMIC 100000PF F 1608
C105	1-131-992-11	s	CAP, CERAMIC 100000PF F 1608
C106	1-131-992-11	s	CAP, CERAMIC 100000PF F 1608
C107	1-131-992-11	s	CAP, CERAMIC 100000PF F 1608
C108	1-131-992-11	s	CAP, CERAMIC 100000PF F 1608
C109	1-131-992-11	s	CAP, CERAMIC 100000PF F 1608
C110	1-131-992-11	s	CAP, CERAMIC 100000PF F 1608
C111	1-131-992-11	s	CAP, CERAMIC 100000PF F 1608
C112	1-131-992-11	s	CAP, CERAMIC 100000PF F 1608
C113	1-131-992-11	s	CAP, CERAMIC 100000PF F 1608
C114	1-131-992-11	s	CAP, CERAMIC 100000PF F 1608
C115	1-131-992-11	s	CAP, CERAMIC 100000PF F 1608
C116	1-131-992-11	s	CAP, CERAMIC 100000PF F 1608
C117	1-131-992-11	s	CAP, CERAMIC 100000PF F 1608
C118	1-131-992-11	s	CAP, CERAMIC 100000PF F 1608
C119	1-131-992-11	s	CAP, CERAMIC 100000PF F 1608
C120	1-131-992-11	s	CAP, CERAMIC 100000PF F 1608
C121	1-131-992-11	s	CAP, CERAMIC 100000PF F 1608
C122	1-131-992-11	s	CAP, CERAMIC 100000PF F 1608
C123	1-131-992-11	s	CAP, CERAMIC 100000PF F 1608
C124	1-131-992-11	s	CAP, CERAMIC 100000PF F 1608
C125	1-131-992-11	s	CAP, CERAMIC 100000PF F 1608
C126	1-131-992-11	s	CAP, CERAMIC 100000PF F 1608
C127	1-131-992-11	s	CAP, CERAMIC 100000PF F 1608
C200	1-126-394-11	s	CAPACITOR,ELECT 10MF/16V(CHIP)
C201	1-131-992-11	s	CAP, CERAMIC 100000PF F 1608
C202	1-131-992-11	s	CAP, CERAMIC 100000PF F 1608
C203	1-131-992-11	s	CAP, CERAMIC 100000PF F 1608
C204	1-126-394-11	s	CAPACITOR,ELECT 10MF/16V(CHIP)
C205	1-131-992-11	s	CAP, CERAMIC 100000PF F 1608
C206	1-131-992-11	s	CAP, CERAMIC 100000PF F 1608
C207	1-126-394-11	s	CAPACITOR,ELECT 10MF/16V(CHIP)
C208	1-131-992-11	s	CAP, CERAMIC 100000PF F 1608
C209	1-131-992-11	s	CAP, CERAMIC 100000PF F 1608
C210	1-131-992-11	s	CAP, CERAMIC 100000PF F 1608
C211	1-127-692-91	s	CAP, CHIP CERAMIC 10MF B 3216
C212	1-127-692-91	s	CAP, CHIP CERAMIC 10MF B 3216
C213	1-131-992-11	s	CAP, CERAMIC 100000PF F 1608
C214	1-131-992-11	s	CAP, CERAMIC 100000PF F 1608
C215	1-131-992-11	s	CAP, CERAMIC 100000PF F 1608
C216	1-131-992-11	s	CAP, CERAMIC 100000PF F 1608
C217	1-131-992-11	s	CAP, CERAMIC 100000PF F 1608
C218	1-131-992-11	s	CAP, CERAMIC 100000PF F 1608
C219	1-131-992-11	s	CAP, CERAMIC 100000PF F 1608
C220	1-131-992-11	s	CAP, CERAMIC 100000PF F 1608
C221	1-131-992-11	s	CAP, CERAMIC 100000PF F 1608
C222	1-131-992-11	s	CAP, CERAMIC 100000PF F 1608
C223	1-131-992-11	s	CAP, CERAMIC 100000PF F 1608
C224	1-131-992-11	s	CAP, CERAMIC 100000PF F 1608
C225	1-131-992-11	s	CAP, CERAMIC 100000PF F 1608

(DPR-229M BOARD [SUFFIX 14-])

Ref. No. or Q'ty	Part No.	SP	Description
C226	1-131-992-11	s	CAP, CERAMIC 100000PF F 1608
C227	1-131-992-11	s	CAP, CERAMIC 100000PF F 1608
C228	1-131-992-11	s	CAP, CERAMIC 100000PF F 1608
C234	1-131-992-11	s	CAP, CERAMIC 100000PF F 1608
C235	1-131-992-11	s	CAP, CERAMIC 100000PF F 1608
C300	1-131-992-11	s	CAP, CERAMIC 100000PF F 1608
C301	1-131-992-11	s	CAP, CERAMIC 100000PF F 1608
C302	1-131-992-11	s	CAP, CERAMIC 100000PF F 1608
C303	1-131-992-11	s	CAP, CERAMIC 100000PF F 1608
C304	1-126-394-11	s	CAPACITOR,ELECT 10MF/16V(CHIP)
C305	1-131-992-11	s	CAP, CERAMIC 100000PF F 1608
C306	1-131-992-11	s	CAP, CERAMIC 100000PF F 1608
C307	1-131-992-11	s	CAP, CERAMIC 100000PF F 1608
C308	1-131-992-11	s	CAP, CERAMIC 100000PF F 1608
C309	1-131-992-11	s	CAP, CERAMIC 100000PF F 1608
C310	1-131-992-11	s	CAP, CERAMIC 100000PF F 1608
C311	1-131-992-11	s	CAP, CERAMIC 100000PF F 1608
C312	1-131-992-11	s	CAP, CERAMIC 100000PF F 1608
C313	1-131-992-11	s	CAP, CERAMIC 100000PF F 1608
C314	1-126-394-11	s	CAPACITOR,ELECT 10MF/16V(CHIP)
C315	1-131-992-11	s	CAP, CERAMIC 100000PF F 1608
C316	1-131-992-11	s	CAP, CERAMIC 100000PF F 1608
C320	1-131-992-11	s	CAP, CERAMIC 100000PF F 1608
C321	1-131-992-11	s	CAP, CERAMIC 100000PF F 1608
C322	1-131-992-11	s	CAP, CERAMIC 100000PF F 1608
C323	1-131-992-11	s	CAP, CERAMIC 100000PF F 1608
C324	1-131-992-11	s	CAP, CERAMIC 100000PF F 1608
C325	1-131-992-11	s	CAP, CERAMIC 100000PF F 1608
C326	1-131-992-11	s	CAP, CERAMIC 100000PF F 1608
C327	1-131-992-11	s	CAP, CERAMIC 100000PF F 1608
C328	1-131-992-11	s	CAP, CERAMIC 100000PF F 1608
C329	1-131-992-11	s	CAP, CERAMIC 100000PF F 1608
C330	1-131-992-11	s	CAP, CERAMIC 100000PF F 1608
C331	1-126-394-11	s	CAPACITOR,ELECT 10MF/16V(CHIP)
C332	1-131-992-11	s	CAP, CERAMIC 100000PF F 1608
C333	1-131-992-11	s	CAP, CERAMIC 100000PF F 1608
C334	1-131-992-11	s	CAP, CERAMIC 100000PF F 1608
C335	1-131-992-11	s	CAP, CERAMIC 100000PF F 1608
C336	1-131-992-11	s	CAP, CERAMIC 100000PF F 1608
C337	1-131-992-11	s	CAP, CERAMIC 100000PF F 1608
C338	1-131-992-11	s	CAP, CERAMIC 100000PF F 1608
C339	1-131-992-11	s	CAP, CERAMIC 100000PF F 1608
C404	1-131-992-11	s	CAP, CERAMIC 100000PF F 1608
C412	1-126-394-11	s	CAPACITOR,ELECT 10MF/16V(CHIP)
C413	1-131-992-11	s	CAP, CERAMIC 100000PF F 1608
C415	1-131-992-11	s	CAP, CERAMIC 100000PF F 1608
C417	1-131-992-11	s	CAP, CERAMIC 100000PF F 1608
C418	1-126-394-11	s	CAPACITOR,ELECT 10MF/16V(CHIP)
C419	1-131-992-11	s	CAP, CERAMIC 100000PF F 1608
C420	1-131-992-11	s	CAP, CERAMIC 100000PF F 1608
C421	1-131-992-11	s	CAP, CERAMIC 100000PF F 1608
C422	1-131-992-11	s	CAP, CERAMIC 100000PF F 1608
C423	1-131-992-11	s	CAP, CERAMIC 100000PF F 1608
C424	1-131-992-11	s	CAP, CERAMIC 100000PF F 1608
C425	1-131-992-11	s	CAP, CERAMIC 100000PF F 1608
C426	1-131-992-11	s	CAP, CERAMIC 100000PF F 1608
C427	1-131-992-11	s	CAP, CERAMIC 100000PF F 1608
C428	1-131-992-11	s	CAP, CERAMIC 100000PF F 1608
C429	1-131-992-11	s	CAP, CERAMIC 100000PF F 1608

(DPR-229M BOARD [SUFFIX 14-])

Ref. No. or Q'ty	Part No.	SP	Description
C430	1-131-992-11	s	CAP, CERAMIC 100000PF F 1608
C431	1-131-992-11	s	CAP, CERAMIC 100000PF F 1608
C432	1-131-992-11	s	CAP, CERAMIC 100000PF F 1608
C433	1-126-394-11	s	CAPACITOR,ELECT 10MF/16V(CHIP)
C434	1-126-394-11	s	CAPACITOR,ELECT 10MF/16V(CHIP)
C435	1-131-992-11	s	CAP, CERAMIC 100000PF F 1608
C437	1-131-992-11	s	CAP, CERAMIC 100000PF F 1608
C439	1-131-992-11	s	CAP, CERAMIC 100000PF F 1608
C440	1-131-992-11	s	CAP, CERAMIC 100000PF F 1608
C500	1-131-992-11	s	CAP, CERAMIC 100000PF F 1608
C501	1-131-992-11	s	CAP, CERAMIC 100000PF F 1608
C502	1-131-992-11	s	CAP, CERAMIC 100000PF F 1608
C503	1-131-992-11	s	CAP, CERAMIC 100000PF F 1608
C504	1-131-992-11	s	CAP, CERAMIC 100000PF F 1608
C505	1-131-992-11	s	CAP, CERAMIC 100000PF F 1608
C506	1-131-992-11	s	CAP, CERAMIC 100000PF F 1608
C507	1-131-992-11	s	CAP, CERAMIC 100000PF F 1608
C508	1-131-992-11	s	CAP, CERAMIC 100000PF F 1608
C509	1-131-992-11	s	CAP, CERAMIC 100000PF F 1608
C510	1-131-992-11	s	CAP, CERAMIC 100000PF F 1608
C511	1-131-992-11	s	CAP, CERAMIC 100000PF F 1608
C512	1-131-992-11	s	CAP, CERAMIC 100000PF F 1608
C513	1-131-992-11	s	CAP, CERAMIC 100000PF F 1608
C514	1-131-992-11	s	CAP, CERAMIC 100000PF F 1608
C515	1-131-992-11	s	CAP, CERAMIC 100000PF F 1608
C516	1-131-992-11	s	CAP, CERAMIC 100000PF F 1608
C517	1-131-992-11	s	CAP, CERAMIC 100000PF F 1608
C518	1-131-992-11	s	CAP, CERAMIC 100000PF F 1608
C519	1-131-992-11	s	CAP, CERAMIC 100000PF F 1608
C520	1-131-992-11	s	CAP, CERAMIC 100000PF F 1608
C521	1-131-992-11	s	CAP, CERAMIC 100000PF F 1608
C522	1-131-992-11	s	CAP, CERAMIC 100000PF F 1608
C523	1-126-394-11	s	CAPACITOR,ELECT 10MF/16V(CHIP)
C524	1-131-992-11	s	CAP, CERAMIC 100000PF F 1608
C525	1-131-992-11	s	CAP, CERAMIC 100000PF F 1608
C526	1-162-922-11	s	CAPACITOR,CERAMIC 39PF/50V CH
C527	1-131-992-11	s	CAP, CERAMIC 100000PF F 1608
C528	1-131-992-11	s	CAP, CERAMIC 100000PF F 1608
C529	1-131-992-11	s	CAP, CERAMIC 100000PF F 1608
C530	1-131-992-11	s	CAP, CERAMIC 100000PF F 1608
C531	1-131-992-11	s	CAP, CERAMIC 100000PF F 1608
C532	1-131-992-11	s	CAP, CERAMIC 100000PF F 1608
C533	1-131-992-11	s	CAP, CERAMIC 100000PF F 1608
C534	1-131-992-11	s	CAP, CERAMIC 100000PF F 1608
C535	1-131-992-11	s	CAP, CERAMIC 100000PF F 1608
C536	1-131-992-11	s	CAP, CERAMIC 100000PF F 1608
C537	1-131-992-11	s	CAP, CERAMIC 100000PF F 1608
C538	1-131-992-11	s	CAP, CERAMIC 100000PF F 1608
C539	1-131-992-11	s	CAP, CERAMIC 100000PF F 1608
C540	1-131-992-11	s	CAP, CERAMIC 100000PF F 1608
C541	1-131-992-11	s	CAP, CERAMIC 100000PF F 1608
C542	1-131-992-11	s	CAP, CERAMIC 100000PF F 1608
C543	1-131-992-11	s	CAP, CERAMIC 100000PF F 1608
C544	1-131-992-11	s	CAP, CERAMIC 100000PF F 1608
C545	1-131-992-11	s	CAP, CERAMIC 100000PF F 1608
C546	1-131-992-11	s	CAP, CERAMIC 100000PF F 1608
C547	1-131-992-11	s	CAP, CERAMIC 100000PF F 1608
C548	1-131-992-11	s	CAP, CERAMIC 100000PF F 1608
C549	1-131-992-11	s	CAP, CERAMIC 100000PF F 1608

(DPR-229M BOARD [SUFFIX 14-])

Ref. No. or Q'ty	Part No.	SP	Description
C550	1-131-992-11	s	CAP, CERAMIC 100000PF F 1608
C551	1-131-992-11	s	CAP, CERAMIC 100000PF F 1608
C552	1-131-992-11	s	CAP, CERAMIC 100000PF F 1608
C606	1-131-992-11	s	CAP, CERAMIC 100000PF F 1608
C607	1-126-394-11	s	CAPACITOR,ELECT 10MF/16V(CHIP)
C608	1-131-992-11	s	CAP, CERAMIC 100000PF F 1608
C609	1-131-992-11	s	CAP, CERAMIC 100000PF F 1608
C650	1-162-970-11	s	CAPACITOR CERAMIC 0.01MF/25V B
C651	1-162-970-11	s	CAPACITOR CERAMIC 0.01MF/25V B
C652	1-131-992-11	s	CAP, CERAMIC 100000PF F 1608
C653	1-131-992-11	s	CAP, CERAMIC 100000PF F 1608
C654	1-126-394-11	s	CAPACITOR,ELECT 10MF/16V(CHIP)
C655	1-131-992-11	s	CAP, CERAMIC 100000PF F 1608
C656	1-131-992-11	s	CAP, CERAMIC 100000PF F 1608
C657	1-131-992-11	s	CAP, CERAMIC 100000PF F 1608
C658	1-131-992-11	s	CAP, CERAMIC 100000PF F 1608
C659	1-131-992-11	s	CAP, CERAMIC 100000PF F 1608
C660	1-131-992-11	s	CAP, CERAMIC 100000PF F 1608
C661	1-131-992-11	s	CAP, CERAMIC 100000PF F 1608
C662	1-131-992-11	s	CAP, CERAMIC 100000PF F 1608
C663	1-126-394-11	s	CAPACITOR,ELECT 10MF/16V(CHIP)
C664	1-165-870-21	s	CAPACITOR, ELECT 100MF(6.3X6)
C665	1-126-394-11	s	CAPACITOR,ELECT 10MF/16V(CHIP)
C666	1-131-992-11	s	CAP, CERAMIC 100000PF F 1608
C667	1-131-992-11	s	CAP, CERAMIC 100000PF F 1608
C668	1-131-992-11	s	CAP, CERAMIC 100000PF F 1608
C669	1-131-992-11	s	CAP, CERAMIC 100000PF F 1608
C670	1-131-992-11	s	CAP, CERAMIC 100000PF F 1608
C671	1-131-992-11	s	CAP, CERAMIC 100000PF F 1608
C672	1-131-992-11	s	CAP, CERAMIC 100000PF F 1608
C673	1-131-992-11	s	CAP, CERAMIC 100000PF F 1608
C674	1-131-992-11	s	CAP, CERAMIC 100000PF F 1608
C675	1-131-992-11	s	CAP, CERAMIC 100000PF F 1608
C676	1-131-992-11	s	CAP, CERAMIC 100000PF F 1608
C677	1-131-992-11	s	CAP, CERAMIC 100000PF F 1608
C678	1-131-992-11	s	CAP, CERAMIC 100000PF F 1608
C679	1-131-992-11	s	CAP, CERAMIC 100000PF F 1608
C680	1-131-992-11	s	CAP, CERAMIC 100000PF F 1608
C681	1-131-992-11	s	CAP, CERAMIC 100000PF F 1608
C682	1-131-992-11	s	CAP, CERAMIC 100000PF F 1608
C683	1-131-992-11	s	CAP, CERAMIC 100000PF F 1608
C684	1-131-992-11	s	CAP, CERAMIC 100000PF F 1608
C685	1-162-925-11	s	CAPACITOR,CERAMIC 68PF/50V CH
C686	1-165-872-21	s	CAPACITOR,SOLID ELECT 47MF
C687	1-126-394-11	s	CAPACITOR,ELECT 10MF/16V(CHIP)
C688	1-126-394-11	s	CAPACITOR,ELECT 10MF/16V(CHIP)
C689	1-131-992-11	s	CAP, CERAMIC 100000PF F 1608
C690	1-131-992-11	s	CAP, CERAMIC 100000PF F 1608
C700	1-131-992-11	s	CAP, CERAMIC 100000PF F 1608
C701	1-113-503-11	s	CAPACITOR,CERAMIC 3900PF CH
C702	1-162-968-11	s	CAPACITOR,CERAMIC 4700PF/50V B
C703	1-131-992-11	s	CAP, CERAMIC 100000PF F 1608
C704	1-131-992-11	s	CAP, CERAMIC 100000PF F 1608
C705	1-131-992-11	s	CAP, CERAMIC 100000PF F 1608
C706	1-131-992-11	s	CAP, CERAMIC 100000PF F 1608
C707	1-131-992-11	s	CAP, CERAMIC 100000PF F 1608
C708	1-131-992-11	s	CAP, CERAMIC 100000PF F 1608
C709	1-131-992-11	s	CAP, CERAMIC 100000PF F 1608
C710	1-131-992-11	s	CAP, CERAMIC 100000PF F 1608

(DPR-229M BOARD [SUFFIX 14-])

Ref. No. or Q'ty	Part No.	SP	Description
C711	1-131-992-11	s	CAP, CERAMIC 100000PF F 1608
C712	1-131-992-11	s	CAP, CERAMIC 100000PF F 1608
C713	1-113-503-11	s	CAPACITOR,CERAMIC 3900PF CH
C714	1-162-968-11	s	CAPACITOR,CERAMIC 4700PF/50V B
C715	1-131-992-11	s	CAP, CERAMIC 100000PF F 1608
C716	1-131-992-11	s	CAP, CERAMIC 100000PF F 1608
C717	1-131-992-11	s	CAP, CERAMIC 100000PF F 1608
C718	1-131-992-11	s	CAP, CERAMIC 100000PF F 1608
C719	1-131-992-11	s	CAP, CERAMIC 100000PF F 1608
C720	1-131-992-11	s	CAP, CERAMIC 100000PF F 1608
C721	1-131-992-11	s	CAP, CERAMIC 100000PF F 1608
C722	1-131-992-11	s	CAP, CERAMIC 100000PF F 1608
C723	1-131-992-11	s	CAP, CERAMIC 100000PF F 1608
C724	1-131-992-11	s	CAP, CERAMIC 100000PF F 1608
C725	1-113-503-11	s	CAPACITOR,CERAMIC 3900PF CH
C726	1-162-968-11	s	CAPACITOR,CERAMIC 4700PF/50V B
C727	1-131-992-11	s	CAP, CERAMIC 100000PF F 1608
C728	1-131-992-11	s	CAP, CERAMIC 100000PF F 1608
C729	1-131-992-11	s	CAP, CERAMIC 100000PF F 1608
C730	1-131-992-11	s	CAP, CERAMIC 100000PF F 1608
C731	1-131-992-11	s	CAP, CERAMIC 100000PF F 1608
C732	1-131-992-11	s	CAP, CERAMIC 100000PF F 1608
C733	1-131-992-11	s	CAP, CERAMIC 100000PF F 1608
C734	1-131-992-11	s	CAP, CERAMIC 100000PF F 1608
C735	1-131-992-11	s	CAP, CERAMIC 100000PF F 1608
C736	1-131-992-11	s	CAP, CERAMIC 100000PF F 1608
C737	1-113-503-11	s	CAPACITOR,CERAMIC 3900PF CH
C738	1-162-968-11	s	CAPACITOR,CERAMIC 4700PF/50V B
C739	1-131-992-11	s	CAP, CERAMIC 100000PF F 1608
C740	1-131-992-11	s	CAP, CERAMIC 100000PF F 1608
C741	1-131-992-11	s	CAP, CERAMIC 100000PF F 1608
C742	1-131-992-11	s	CAP, CERAMIC 100000PF F 1608
C743	1-131-992-11	s	CAP, CERAMIC 100000PF F 1608
C744	1-131-992-11	s	CAP, CERAMIC 100000PF F 1608
C745	1-131-992-11	s	CAP, CERAMIC 100000PF F 1608
C746	1-131-992-11	s	CAP, CERAMIC 100000PF F 1608
C747	1-131-992-11	s	CAP, CERAMIC 100000PF F 1608
C748	1-131-992-11	s	CAP, CERAMIC 100000PF F 1608
C800	1-126-394-11	s	CAPACITOR,ELECT 10MF/16V(CHIP)
C801	1-131-992-11	s	CAP, CERAMIC 100000PF F 1608
C802	1-131-992-11	s	CAP, CERAMIC 100000PF F 1608
C803	1-131-992-11	s	CAP, CERAMIC 100000PF F 1608
C804	1-131-992-11	s	CAP, CERAMIC 100000PF F 1608
C810	1-131-992-11	s	CAP, CERAMIC 100000PF F 1608
C811	1-131-992-11	s	CAP, CERAMIC 100000PF F 1608
C812	1-128-590-11	s	CAPACITOR ELECT 100MF/6.3V(105
C813	1-128-590-11	s	CAPACITOR ELECT 100MF/6.3V(105
C814	1-131-992-11	s	CAP, CERAMIC 100000PF F 1608
C815	1-131-992-11	s	CAP, CERAMIC 100000PF F 1608
C816	1-131-992-11	s	CAP, CERAMIC 100000PF F 1608
C817	1-131-992-11	s	CAP, CERAMIC 100000PF F 1608
C818	1-131-992-11	s	CAP, CERAMIC 100000PF F 1608
C819	1-128-590-11	s	CAPACITOR ELECT 100MF/6.3V(105
C820	1-128-590-11	s	CAPACITOR ELECT 100MF/6.3V(105
C821	1-128-590-11	s	CAPACITOR ELECT 100MF/6.3V(105
C822	1-128-590-11	s	CAPACITOR ELECT 100MF/6.3V(105
C823	1-131-992-11	s	CAP, CERAMIC 100000PF F 1608
C827	1-131-992-11	s	CAP, CERAMIC 100000PF F 1608
C829	1-131-992-11	s	CAP, CERAMIC 100000PF F 1608

(DPR-229M BOARD [SUFFIX 14-])

Ref. No. or Q'ty	Part No.	SP	Description
C831	1-131-992-11	s	CAP, CERAMIC 100000PF F 1608
C832	1-131-992-11	s	CAP, CERAMIC 100000PF F 1608
C833	1-131-992-11	s	CAP, CERAMIC 100000PF F 1608
C834	1-131-992-11	s	CAP, CERAMIC 100000PF F 1608
C835	1-131-992-11	s	CAP, CERAMIC 100000PF F 1608
C837	1-131-992-11	s	CAP, CERAMIC 100000PF F 1608
C838	1-131-992-11	s	CAP, CERAMIC 100000PF F 1608
C839	1-126-394-11	s	CAPACITOR,ELECT 10MF/16V(CHIP)
C842	1-131-992-11	s	CAP, CERAMIC 100000PF F 1608
C843	1-131-992-11	s	CAP, CERAMIC 100000PF F 1608
C844	1-131-992-11	s	CAP, CERAMIC 100000PF F 1608
C845	1-131-992-11	s	CAP, CERAMIC 100000PF F 1608
C846	1-131-992-11	s	CAP, CERAMIC 100000PF F 1608
C847	1-131-992-11	s	CAP, CERAMIC 100000PF F 1608
C848	1-126-394-11	s	CAPACITOR,ELECT 10MF/16V(CHIP)
C849	1-126-394-11	s	CAPACITOR,ELECT 10MF/16V(CHIP)
C850	1-131-992-11	s	CAP, CERAMIC 100000PF F 1608
C851	1-131-992-11	s	CAP, CERAMIC 100000PF F 1608
C852	1-131-992-11	s	CAP, CERAMIC 100000PF F 1608
C853	1-126-394-11	s	CAPACITOR,ELECT 10MF/16V(CHIP)
C862	1-131-992-11	s	CAP, CERAMIC 100000PF F 1608
C863	1-131-992-11	s	CAP, CERAMIC 100000PF F 1608
C864	1-131-992-11	s	CAP, CERAMIC 100000PF F 1608
C865	1-131-992-11	s	CAP, CERAMIC 100000PF F 1608
C867	1-127-861-11	s	CAP, CERAMIC 2.2MF B (3216)
C868	1-127-861-11	s	CAP, CERAMIC 2.2MF B (3216)
C869	1-131-992-11	s	CAP, CERAMIC 100000PF F 1608
C912	1-131-992-11	s	CAP, CERAMIC 100000PF F 1608
C913	1-126-394-11	s	CAPACITOR,ELECT 10MF/16V(CHIP)
C914	1-126-394-11	s	CAPACITOR,ELECT 10MF/16V(CHIP)
C915	1-131-992-11	s	CAP, CERAMIC 100000PF F 1608
C916	1-131-992-11	s	CAP, CERAMIC 100000PF F 1608
C917	1-131-992-11	s	CAP, CERAMIC 100000PF F 1608
C918	1-131-992-11	s	CAP, CERAMIC 100000PF F 1608
C919	1-131-992-11	s	CAP, CERAMIC 100000PF F 1608
C920	1-131-992-11	s	CAP, CERAMIC 100000PF F 1608
C921	1-131-992-11	s	CAP, CERAMIC 100000PF F 1608
C922	1-131-992-11	s	CAP, CERAMIC 100000PF F 1608
C923	1-131-992-11	s	CAP, CERAMIC 100000PF F 1608
C924	1-131-992-11	s	CAP, CERAMIC 100000PF F 1608
C925	1-131-992-11	s	CAP, CERAMIC 100000PF F 1608
C926	1-131-992-11	s	CAP, CERAMIC 100000PF F 1608
C927	1-131-992-11	s	CAP, CERAMIC 100000PF F 1608
C928	1-131-992-11	s	CAP, CERAMIC 100000PF F 1608
C929	1-131-992-11	s	CAP, CERAMIC 100000PF F 1608
C930	1-131-992-11	s	CAP, CERAMIC 100000PF F 1608
C931	1-131-992-11	s	CAP, CERAMIC 100000PF F 1608
C932	1-131-992-11	s	CAP, CERAMIC 100000PF F 1608
C933	1-131-992-11	s	CAP, CERAMIC 100000PF F 1608
C934	1-131-992-11	s	CAP, CERAMIC 100000PF F 1608
C935	1-131-992-11	s	CAP, CERAMIC 100000PF F 1608
C936	1-131-992-11	s	CAP, CERAMIC 100000PF F 1608
C937	1-131-992-11	s	CAP, CERAMIC 100000PF F 1608
C938	1-131-992-11	s	CAP, CERAMIC 100000PF F 1608
C939	1-131-992-11	s	CAP, CERAMIC 100000PF F 1608
CN16	1-580-789-91	s	PIN, CONNECTOR 6P
E100	1-535-877-22	s	CHIP,CHECKER (TEST POINT)
E200	1-535-877-22	s	CHIP,CHECKER (TEST POINT)

(DPR-229M BOARD [SUFFIX 14-])

Ref. No. or Q'ty	Part No.	SP	Description
E300	1-535-877-22	s	CHIP,CHECKER (TEST POINT)
E400	1-535-877-22	s	CHIP,CHECKER (TEST POINT)
E401	1-535-877-22	s	CHIP,CHECKER (TEST POINT)
E500	1-535-877-22	s	CHIP,CHECKER (TEST POINT)
E600	1-535-877-22	s	CHIP,CHECKER (TEST POINT)
E700	1-535-877-22	s	CHIP,CHECKER (TEST POINT)
E800	1-535-877-22	s	CHIP,CHECKER (TEST POINT)
F800	⚠ 1-576-270-11	s	FUSE CHIP 4A/125V (6125)
F802	⚠ 1-576-270-11	s	FUSE CHIP 4A/125V (6125)
F803	⚠ 1-576-270-11	s	FUSE CHIP 4A/125V (6125)
FB200	1-469-094-21	s	FERRITE, EMI (SMD)
FL200	1-239-898-22	s	FILTER, EMI (SMD)
FL600	1-233-674-21	s	FILTER, EMI
FL601	1-233-674-21	s	FILTER, EMI
IC100	8-759-549-15	s	IC SN74LV245APWR
IC101	8-759-549-15	s	IC SN74LV245APWR
IC102	8-759-523-84	s	IC TC74VHC14FT (EL)
IC103	8-759-491-46	s	IC TC74VHCT04AFT (EL)
IC104	8-759-491-46	s	IC TC74VHCT04AFT (EL)
IC105	8-759-523-94	s	IC TC74VHC32FT(EL)
IC106	8-759-549-01	s	IC SN74LV125APWR
IC107	8-759-392-77	s	IC SN74LVC245APW (E20)
IC108	8-759-549-15	s	IC SN74LV245APWR
IC109	8-759-524-07	s	IC TC74VHC138FT(EL)
IC110	8-759-549-15	s	IC SN74LV245APWR
IC111	8-759-491-46	s	IC TC74VHCT04AFT (EL)
IC112	8-759-549-15	s	IC SN74LV245APWR
IC113	8-759-549-15	s	IC SN74LV245APWR
IC114	8-759-549-15	s	IC SN74LV245APWR
IC115	8-759-549-15	s	IC SN74LV245APWR
IC116	8-759-549-15	s	IC SN74LV245APWR
IC117	8-759-549-15	s	IC SN74LV245APWR
IC118	8-759-524-07	s	IC TC74VHC138FT(EL)
IC119	8-759-524-07	s	IC TC74VHC138FT(EL)
IC120	8-759-523-81	s	IC TC74VHC08FT(EL)
IC121	6-706-487-01	s	IC TC7SH08FU(T5RSOYJF)
IC122	8-759-523-92	s	IC TC74VHC21FT(EL)
IC123	8-759-549-15	s	IC SN74LV245APWR
IC124	8-752-392-03	s	IC CXD1095BR
IC125	6-706-487-01	s	IC TC7SH08FU(T5RSOYJF)
IC126	6-706-482-01	s	IC TC7SH00FU(T5RSOYJF)
IC200	8-759-475-55	s	IC TC74LCX574FT(EL)
IC201	8-759-475-55	s	IC TC74LCX574FT(EL)
IC202	8-759-475-55	s	IC TC74LCX574FT(EL)
IC203	8-759-669-41	s	IC SN74LVC125APWR-12
IC204	6-706-484-01	s	IC TC7SH04FU(T5RSOYJF)
IC205	8-759-669-41	s	IC SN74LVC125APWR-12
IC208	8-759-392-77	s	IC SN74LVC245APW (E20)
IC209	8-759-392-77	s	IC SN74LVC245APW (E20)
IC210	8-759-392-77	s	IC SN74LVC245APW (E20)
IC211	6-705-983-01	s	IC IS42S32200B-6TL-TR
IC217	6-706-484-01	s	IC TC7SH04FU(T5RSOYJF)
IC301	8-759-449-09	s	IC CXD8945BR
IC302	8-759-524-10	s	IC TC74VHC157FT (EL)
IC303	8-759-524-10	s	IC TC74VHC157FT (EL)
IC307	6-700-497-01	s	IC MSM56V16800F-10TS-K
IC308	6-700-497-01	s	IC MSM56V16800F-10TS-K

(DPR-229M BOARD [SUFFIX 14-])

Ref. No. or Q'ty	Part No.	SP	Description
IC309	6-700-497-01	s	IC MSM56V16800F-10TS-K
IC310	8-759-392-77	s	IC SN74LVC245APW (E20)
IC311	8-759-392-77	s	IC SN74LVC245APW (E20)
IC312	6-705-983-01	s	IC IS42S32200B-6TL-TR
IC401	8-759-669-41	s	IC SN74LVC125APWR-12
IC402	8-759-712-31	s	IC SN65LVDT388DBTR
IC404	8-759-712-31	s	IC SN65LVDT388DBTR
IC406	8-759-639-86	s	IC SN65LVDS32DR
IC407	8-759-656-31	o	IC CXD9094AR
IC408	8-759-712-32	s	IC SN65LVDS389DBTR
IC410	8-759-712-32	s	IC SN65LVDS389DBTR
IC412	8-759-712-32	s	IC SN65LVDS389DBTR
IC413	8-759-639-86	s	IC SN65LVDS32DR
IC500	8-759-199-86	s	IC CXD8807BR
IC501	8-759-549-15	s	IC SN74LV245APWR
IC502	8-759-549-15	s	IC SN74LV245APWR
IC506	8-752-373-24	s	IC CXK48324R-1-T6
IC507	8-752-373-24	s	IC CXK48324R-1-T6
IC508	8-752-373-24	s	IC CXK48324R-1-T6
IC509	8-752-373-24	s	IC CXK48324R-1-T6
IC510	8-752-373-24	s	IC CXK48324R-1-T6
IC601	8-759-524-09	s	IC TC74VHC153FT (EL)
IC602	8-759-475-55	s	IC TC74LCX574FT(EL)
IC603	8-759-475-55	s	IC TC74LCX574FT(EL)
IC653	8-759-549-15	s	IC SN74LV245APWR
IC654	8-759-549-15	s	IC SN74LV245APWR
IC655	8-759-664-03	s	IC LP3964EMPX-ADJ
IC700	8-752-392-03	s	IC CXD1095BR
IC701	6-702-254-01	s	IC DSPB56362PV100-1J21D
IC702	8-759-543-83	s	IC KM416V1204CT-L6
IC703	8-759-543-83	s	IC KM416V1204CT-L6
IC704	6-702-254-01	s	IC DSPB56362PV100-1J21D
IC705	8-759-543-83	s	IC KM416V1204CT-L6
IC706	8-759-543-83	s	IC KM416V1204CT-L6
IC707	6-702-254-01	s	IC DSPB56362PV100-1J21D
IC708	8-759-543-83	s	IC KM416V1204CT-L6
IC709	8-759-543-83	s	IC KM416V1204CT-L6
IC710	6-702-254-01	s	IC DSPB56362PV100-1J21D
IC711	8-759-543-83	s	IC KM416V1204CT-L6
IC712	8-759-543-83	s	IC KM416V1204CT-L6
IC801	8-759-549-15	s	IC SN74LV245APWR
IC802	6-706-487-01	s	IC TC7SH08FU(T5RSOYJF)
IC803	8-759-491-46	s	IC TC74VHCT04AFT (EL)
IC804	8-759-669-41	s	IC SN74LVC125APWR-12
IC805	8-759-475-43	s	IC TC74LCX125FT(EL)
IC808	8-759-549-15	s	IC SN74LV245APWR
IC809	8-759-523-78	s	IC TC74VHC00FT(EL)
IC810	8-759-392-77	s	IC SN74LVC245APW (E20)
IC812	8-759-669-41	s	IC SN74LVC125APWR-12
IC813	8-759-669-41	s	IC SN74LVC125APWR-12
IC814	8-759-669-41	s	IC SN74LVC125APWR-12
IC815	8-759-475-43	s	IC TC74LCX125FT(EL)
IC817	8-759-549-01	s	IC SN74LV125APWR
IC818	8-759-549-15	s	IC SN74LV245APWR
IC819	8-759-524-10	s	IC TC74VHC157FT (EL)
IC822	8-759-549-01	s	IC SN74LV125APWR
IC823	8-759-549-15	s	IC SN74LV245APWR
IC824	8-759-549-15	s	IC SN74LV245APWR
IC825	8-759-549-15	s	IC SN74LV245APWR

(DPR-229M BOARD [SUFFIX 14-])

Ref. No. or Q'ty	Part No.	SP	Description
IC826	8-759-549-01	s	IC SN74LV125APWR
IC827	6-704-723-01	s	IC XCS20XL-4VQG100C
IC829	8-759-524-10	s	IC TC74VHC157FT (EL)
IC831	8-759-524-27	s	IC TC74VHC244FT(EL)
IC832	6-706-484-01	s	IC TC7SH04FU(T5RSOYJF)
IC833	6-803-242-02	s	IC XC18V02-DPR229IMX-V4.00
IC834	6-803-243-03	s	IC XC18V02-DPR229SX-V3.01
IC902	6-802-024-01	s	IC CXD9012BR
IC903	8-759-549-15	s	IC SN74LV245APWR
IC904	8-759-549-15	s	IC SN74LV245APWR
IC905	6-705-983-01	s	IC IS42S32200B-6TL-TR
L100	1-412-056-11	s	INDUCTOR 4.7UH (3225)
L101	1-412-056-11	s	INDUCTOR 4.7UH (3225)
L102	1-412-056-11	s	INDUCTOR 4.7UH (3225)
L103	1-412-056-11	s	INDUCTOR 4.7UH (3225)
L200	1-412-056-11	s	INDUCTOR 4.7UH (3225)
L201	1-412-056-11	s	INDUCTOR 4.7UH (3225)
L402	1-412-056-11	s	INDUCTOR 4.7UH (3225)
L405	1-412-056-11	s	INDUCTOR 4.7UH (3225)
L600	1-412-056-11	s	INDUCTOR 4.7UH (3225)
L651	1-412-056-11	s	INDUCTOR 4.7UH (3225)
L800	1-419-630-11	s	COIL, CHOKE 4.7UH
L801	1-419-630-11	s	COIL, CHOKE 4.7UH
L802	1-419-630-11	s	COIL, CHOKE 4.7UH
L803	1-419-630-11	s	COIL, CHOKE 4.7UH
L804	1-412-056-11	s	INDUCTOR 4.7UH (3225)
L806	1-412-056-11	s	INDUCTOR 4.7UH (3225)
L807	1-412-056-11	s	INDUCTOR 4.7UH (3225)
L808	1-412-056-11	s	INDUCTOR 4.7UH (3225)
Q400	8-729-928-81	s	TRANSISTOR DTC144EE
Q800	8-729-928-81	s	TRANSISTOR DTC144EE
Q801	8-729-045-53	s	TRANSISTOR SI4431DY-T1
Q802	8-729-140-63	s	TRANSISTOR 2SA1611-M5M6
R100	1-218-895-11	s	RESISTOR,CHIP 100K 1/10W(1608)
R101	1-218-895-11	s	RESISTOR,CHIP 100K 1/10W(1608)
R102	1-218-895-11	s	RESISTOR,CHIP 100K 1/10W(1608)
R103	1-218-895-11	s	RESISTOR,CHIP 100K 1/10W(1608)
R105	1-218-895-11	s	RESISTOR,CHIP 100K 1/10W(1608)
R106	1-211-985-11	s	RESISTOR,CHIP 47 1/10W (1608)
R107	1-211-985-11	s	RESISTOR,CHIP 47 1/10W (1608)
R108	1-211-985-11	s	RESISTOR,CHIP 47 1/10W (1608)
R109	1-211-985-11	s	RESISTOR,CHIP 47 1/10W (1608)
R110	1-218-895-11	s	RESISTOR,CHIP 100K 1/10W(1608)
R111	1-218-823-11	s	RESISTOR,CHIP 100 1/10W (1608)
R117	1-218-863-11	s	RESISTOR,CHIP 4.7K 1/10W(1608)
R118	1-218-863-11	s	RESISTOR,CHIP 4.7K 1/10W(1608)
R122	1-218-863-11	s	RESISTOR,CHIP 4.7K 1/10W(1608)
R124	1-218-863-11	s	RESISTOR,CHIP 4.7K 1/10W(1608)
R125	1-218-863-11	s	RESISTOR,CHIP 4.7K 1/10W(1608)
R126	1-218-863-11	s	RESISTOR,CHIP 4.7K 1/10W(1608)
R130	1-216-864-11	s	CONDUCTOR, CHIP (1608)
R131	1-216-864-11	s	CONDUCTOR, CHIP (1608)
R132	1-216-864-11	s	CONDUCTOR, CHIP (1608)
R133	1-216-864-11	s	CONDUCTOR, CHIP (1608)
R134	1-218-863-11	s	RESISTOR,CHIP 4.7K 1/10W(1608)
R136	1-211-977-11	s	RESISTOR,CHIP 22 1/10W (1608)
R141	1-216-864-11	s	CONDUCTOR, CHIP (1608)
R143	1-218-895-11	s	RESISTOR,CHIP 100K 1/10W(1608)

(DPR-229M BOARD [SUFFIX 14-])

Ref. No. or Q'ty	Part No.	SP	Description
R144	1-211-977-11	s	RESISTOR,CHIP 22 1/10W (1608)
R200	1-218-831-11	s	RESISTOR, CHIP 220 1/10W(1608)
R202	1-216-864-11	s	CONDUCTOR, CHIP (1608)
R203	1-211-985-11	s	RESISTOR,CHIP 47 1/10W (1608)
R204	1-211-977-11	s	RESISTOR,CHIP 22 1/10W (1608)
R207	1-216-864-11	s	CONDUCTOR, CHIP (1608)
R208	1-218-871-11	s	RESISTOR,CHIP 10K 1/10W (1608)
R209	1-216-864-11	s	CONDUCTOR, CHIP (1608)
R210	1-216-864-11	s	CONDUCTOR, CHIP (1608)
R212	1-216-864-11	s	CONDUCTOR, CHIP (1608)
R213	1-216-864-11	s	CONDUCTOR, CHIP (1608)
R215	1-216-864-11	s	CONDUCTOR, CHIP (1608)
R216	1-216-864-11	s	CONDUCTOR, CHIP (1608)
R217	1-216-864-11	s	CONDUCTOR, CHIP (1608)
R218	1-211-977-11	s	RESISTOR,CHIP 22 1/10W (1608)
R219	1-218-863-11	s	RESISTOR,CHIP 4.7K 1/10W(1608)
R300	1-216-864-11	s	CONDUCTOR, CHIP (1608)
R301	1-216-864-11	s	CONDUCTOR, CHIP (1608)
R302	1-216-864-11	s	CONDUCTOR, CHIP (1608)
R303	1-218-863-11	s	RESISTOR,CHIP 4.7K 1/10W(1608)
R304	1-218-863-11	s	RESISTOR,CHIP 4.7K 1/10W(1608)
R305	1-218-863-11	s	RESISTOR,CHIP 4.7K 1/10W(1608)
R306	1-218-895-11	s	RESISTOR,CHIP 100K 1/10W(1608)
R307	1-218-863-11	s	RESISTOR,CHIP 4.7K 1/10W(1608)
R312	1-216-864-11	s	CONDUCTOR, CHIP (1608)
R313	1-216-864-11	s	CONDUCTOR, CHIP (1608)
R314	1-216-864-11	s	CONDUCTOR, CHIP (1608)
R315	1-216-864-11	s	CONDUCTOR, CHIP (1608)
R316	1-216-864-11	s	CONDUCTOR, CHIP (1608)
R317	1-218-895-11	s	RESISTOR,CHIP 100K 1/10W(1608)
R318	1-218-895-11	s	RESISTOR,CHIP 100K 1/10W(1608)
R319	1-218-895-11	s	RESISTOR,CHIP 100K 1/10W(1608)
R320	1-218-895-11	s	RESISTOR,CHIP 100K 1/10W(1608)
R321	1-218-895-11	s	RESISTOR,CHIP 100K 1/10W(1608)
R322	1-216-864-11	s	CONDUCTOR, CHIP (1608)
R323	1-216-864-11	s	CONDUCTOR, CHIP (1608)
R324	1-216-864-11	s	CONDUCTOR, CHIP (1608)
R325	1-216-864-11	s	CONDUCTOR, CHIP (1608)
R326	1-216-864-11	s	CONDUCTOR, CHIP (1608)
R327	1-216-864-11	s	CONDUCTOR, CHIP (1608)
R328	1-216-864-11	s	CONDUCTOR, CHIP (1608)
R329	1-216-864-11	s	CONDUCTOR, CHIP (1608)
R330	1-218-895-11	s	RESISTOR,CHIP 100K 1/10W(1608)
R331	1-216-864-11	s	CONDUCTOR, CHIP (1608)
R335	1-216-864-11	s	CONDUCTOR, CHIP (1608)
R338	1-218-863-11	s	RESISTOR,CHIP 4.7K 1/10W(1608)
R349	1-216-864-11	s	CONDUCTOR, CHIP (1608)
R351	1-211-977-11	s	RESISTOR,CHIP 22 1/10W (1608)
R352	1-211-977-11	s	RESISTOR,CHIP 22 1/10W (1608)
R353	1-218-863-11	s	RESISTOR,CHIP 4.7K 1/10W(1608)
R354	1-218-863-11	s	RESISTOR,CHIP 4.7K 1/10W(1608)
R355	1-218-863-11	s	RESISTOR,CHIP 4.7K 1/10W(1608)
R356	1-216-864-11	s	CONDUCTOR, CHIP (1608)
R359	1-211-977-11	s	RESISTOR,CHIP 22 1/10W (1608)
R400	1-218-895-11	s	RESISTOR,CHIP 100K 1/10W(1608)
R402	1-211-985-11	s	RESISTOR,CHIP 47 1/10W (1608)
R403	1-211-985-11	s	RESISTOR,CHIP 47 1/10W (1608)
R421	1-218-823-11	s	RESISTOR,CHIP 100 1/10W (1608)
R422	1-218-823-11	s	RESISTOR,CHIP 100 1/10W (1608)

(DPR-229M BOARD [SUFFIX 14-])

Ref. No. or Q'ty	Part No.	SP	Description
R423	1-218-823-11	s	RESISTOR,CHIP 100 1/10W (1608)
R424	1-218-823-11	s	RESISTOR,CHIP 100 1/10W (1608)
R428	1-218-823-11	s	RESISTOR,CHIP 100 1/10W (1608)
R429	1-218-823-11	s	RESISTOR,CHIP 100 1/10W (1608)
R430	1-218-823-11	s	RESISTOR,CHIP 100 1/10W (1608)
R431	1-218-823-11	s	RESISTOR,CHIP 100 1/10W (1608)
R432	1-211-977-11	s	RESISTOR,CHIP 22 1/10W (1608)
R433	1-211-977-11	s	RESISTOR,CHIP 22 1/10W (1608)
R434	1-211-977-11	s	RESISTOR,CHIP 22 1/10W (1608)
R435	1-216-864-11	s	CONDUCTOR, CHIP (1608)
R436	1-216-864-11	s	CONDUCTOR, CHIP (1608)
R437	1-211-985-11	s	RESISTOR,CHIP 47 1/10W (1608)
R439	1-216-864-11	s	CONDUCTOR, CHIP (1608)
R440	1-218-895-11	s	RESISTOR,CHIP 100K 1/10W(1608)
R442	1-211-985-11	s	RESISTOR,CHIP 47 1/10W (1608)
R443	1-218-863-11	s	RESISTOR,CHIP 4.7K 1/10W(1608)
R502	1-216-864-11	s	CONDUCTOR, CHIP (1608)
R503	1-216-864-11	s	CONDUCTOR, CHIP (1608)
R605	1-216-864-11	s	CONDUCTOR, CHIP (1608)
R606	1-216-864-11	s	CONDUCTOR, CHIP (1608)
R607	1-216-864-11	s	CONDUCTOR, CHIP (1608)
R650	1-218-847-11	s	RESISTOR, CHIP 1K 1/10W (1608)
R652	1-216-864-11	s	CONDUCTOR, CHIP (1608)
R653	1-216-864-11	s	CONDUCTOR, CHIP (1608)
R654	1-216-864-11	s	CONDUCTOR, CHIP (1608)
R657	1-218-871-11	s	RESISTOR,CHIP 10K 1/10W (1608)
R658	1-216-864-11	s	CONDUCTOR, CHIP (1608)
R659	1-216-864-11	s	CONDUCTOR, CHIP (1608)
R660	1-216-864-11	s	CONDUCTOR, CHIP (1608)
R661	1-218-903-11	s	RESISTOR,CHIP 220K 1/10W(1608)
R662	1-218-878-11	s	RESISTOR,CHIP 20K 1/10W (1608)
R663	1-218-878-11	s	RESISTOR,CHIP 20K 1/10W (1608)
R666	1-211-990-11	s	RESISTOR,CHIP 75 1/10W (1608)
R668	1-211-990-11	s	RESISTOR,CHIP 75 1/10W (1608)
R670	1-218-903-11	s	RESISTOR,CHIP 220K 1/10W(1608)
R671	1-218-903-11	s	RESISTOR,CHIP 220K 1/10W(1608)
R672	1-218-871-11	s	RESISTOR,CHIP 10K 1/10W (1608)
R673	1-218-856-11	s	RESISTOR,CHIP 2.4K 1/10W(1608)
R674	1-218-871-11	s	RESISTOR,CHIP 10K 1/10W (1608)
R676	1-211-899-11	s	RESISTOR,CHIP 0.22 1/4W (3225)
R715	1-216-864-11	s	CONDUCTOR, CHIP (1608)
R716	1-216-864-11	s	CONDUCTOR, CHIP (1608)
R717	1-216-864-11	s	CONDUCTOR, CHIP (1608)
R718	1-216-864-11	s	CONDUCTOR, CHIP (1608)
R719	1-216-864-11	s	CONDUCTOR, CHIP (1608)
R720	1-216-864-11	s	CONDUCTOR, CHIP (1608)
R722	1-216-864-11	s	CONDUCTOR, CHIP (1608)
R723	1-216-864-11	s	CONDUCTOR, CHIP (1608)
R724	1-216-864-11	s	CONDUCTOR, CHIP (1608)
R725	1-216-864-11	s	CONDUCTOR, CHIP (1608)
R726	1-216-864-11	s	CONDUCTOR, CHIP (1608)
R727	1-216-864-11	s	CONDUCTOR, CHIP (1608)
R728	1-216-864-11	s	CONDUCTOR, CHIP (1608)
R729	1-216-864-11	s	CONDUCTOR, CHIP (1608)
R738	1-218-847-11	s	RESISTOR, CHIP 1K 1/10W (1608)
R739	1-218-847-11	s	RESISTOR, CHIP 1K 1/10W (1608)
R740	1-218-847-11	s	RESISTOR, CHIP 1K 1/10W (1608)
R748	1-216-864-11	s	CONDUCTOR, CHIP (1608)
R749	1-216-864-11	s	CONDUCTOR, CHIP (1608)

(DPR-229M BOARD [SUFFIX 14-])

Ref. No. or Q'ty	Part No.	SP	Description
R750	1-216-864-11	s	CONDUCTOR, CHIP (1608)
R751	1-216-864-11	s	CONDUCTOR, CHIP (1608)
R752	1-216-864-11	s	CONDUCTOR, CHIP (1608)
R753	1-216-864-11	s	CONDUCTOR, CHIP (1608)
R755	1-216-864-11	s	CONDUCTOR, CHIP (1608)
R756	1-216-864-11	s	CONDUCTOR, CHIP (1608)
R757	1-216-864-11	s	CONDUCTOR, CHIP (1608)
R758	1-216-864-11	s	CONDUCTOR, CHIP (1608)
R759	1-216-864-11	s	CONDUCTOR, CHIP (1608)
R760	1-216-864-11	s	CONDUCTOR, CHIP (1608)
R761	1-216-864-11	s	CONDUCTOR, CHIP (1608)
R762	1-216-864-11	s	CONDUCTOR, CHIP (1608)
R771	1-218-847-11	s	RESISTOR, CHIP 1K 1/10W (1608)
R772	1-218-847-11	s	RESISTOR, CHIP 1K 1/10W (1608)
R773	1-218-847-11	s	RESISTOR, CHIP 1K 1/10W (1608)
R781	1-216-864-11	s	CONDUCTOR, CHIP (1608)
R782	1-216-864-11	s	CONDUCTOR, CHIP (1608)
R783	1-216-864-11	s	CONDUCTOR, CHIP (1608)
R784	1-216-864-11	s	CONDUCTOR, CHIP (1608)
R785	1-216-864-11	s	CONDUCTOR, CHIP (1608)
R786	1-216-864-11	s	CONDUCTOR, CHIP (1608)
R788	1-216-864-11	s	CONDUCTOR, CHIP (1608)
R789	1-216-864-11	s	CONDUCTOR, CHIP (1608)
R790	1-216-864-11	s	CONDUCTOR, CHIP (1608)
R791	1-216-864-11	s	CONDUCTOR, CHIP (1608)
R792	1-216-864-11	s	CONDUCTOR, CHIP (1608)
R793	1-216-864-11	s	CONDUCTOR, CHIP (1608)
R794	1-216-864-11	s	CONDUCTOR, CHIP (1608)
R795	1-216-864-11	s	CONDUCTOR, CHIP (1608)
R801	1-216-864-11	s	CONDUCTOR, CHIP (1608)
R802	1-216-864-11	s	CONDUCTOR, CHIP (1608)
R803	1-218-863-11	s	RESISTOR,CHIP 4.7K 1/10W(1608)
R805	1-218-863-11	s	RESISTOR,CHIP 4.7K 1/10W(1608)
R811	1-216-864-11	s	CONDUCTOR, CHIP (1608)
R813	1-218-831-11	s	RESISTOR, CHIP 220 1/10W(1608)
R814	1-218-831-11	s	RESISTOR, CHIP 220 1/10W(1608)
R815	1-218-831-11	s	RESISTOR, CHIP 220 1/10W(1608)
R820	1-211-977-11	s	RESISTOR,CHIP 22 1/10W (1608)
R822	1-211-977-11	s	RESISTOR,CHIP 22 1/10W (1608)
R823	1-211-977-11	s	RESISTOR,CHIP 22 1/10W (1608)
R824	1-211-977-11	s	RESISTOR,CHIP 22 1/10W (1608)
R825	1-211-977-11	s	RESISTOR,CHIP 22 1/10W (1608)
R826	1-211-977-11	s	RESISTOR,CHIP 22 1/10W (1608)
R827	1-211-977-11	s	RESISTOR,CHIP 22 1/10W (1608)
R828	1-211-977-11	s	RESISTOR,CHIP 22 1/10W (1608)
R831	1-211-977-11	s	RESISTOR,CHIP 22 1/10W (1608)
R834	1-218-895-11	s	RESISTOR,CHIP 100K 1/10W(1608)
R835	1-218-895-11	s	RESISTOR,CHIP 100K 1/10W(1608)
R839	1-216-864-11	s	CONDUCTOR, CHIP (1608)
R841	1-211-977-11	s	RESISTOR,CHIP 22 1/10W (1608)
R854	1-211-977-11	s	RESISTOR,CHIP 22 1/10W (1608)
R855	1-211-977-11	s	RESISTOR,CHIP 22 1/10W (1608)
R856	1-211-977-11	s	RESISTOR,CHIP 22 1/10W (1608)
R857	1-211-977-11	s	RESISTOR,CHIP 22 1/10W (1608)
R858	1-211-977-11	s	RESISTOR,CHIP 22 1/10W (1608)
R859	1-211-977-11	s	RESISTOR,CHIP 22 1/10W (1608)
R860	1-211-977-11	s	RESISTOR,CHIP 22 1/10W (1608)
R861	1-211-977-11	s	RESISTOR,CHIP 22 1/10W (1608)
R862	1-211-977-11	s	RESISTOR,CHIP 22 1/10W (1608)

(DPR-229M BOARD [SUFFIX 14-])

Ref. No. or Q'ty	Part No.	SP	Description
R863	1-218-871-11	s	RESISTOR,CHIP 10K 1/10W (1608)
R864	1-218-847-11	s	RESISTOR, CHIP 1K 1/10W (1608)
R865	1-218-847-11	s	RESISTOR, CHIP 1K 1/10W (1608)
R866	1-218-835-11	s	RESISTOR,CHIP 330 1/10W (1608)
R867	1-218-835-11	s	RESISTOR,CHIP 330 1/10W (1608)
R903	1-218-849-11	s	RESISTOR,CHIP 1.2K 1/10W(1608)
R904	1-218-847-11	s	RESISTOR, CHIP 1K 1/10W (1608)
R905	1-216-864-11	s	CONDUCTOR, CHIP (1608)
R906	1-216-864-11	s	CONDUCTOR, CHIP (1608)
R907	1-216-864-11	s	CONDUCTOR, CHIP (1608)
R908	1-216-864-11	s	CONDUCTOR, CHIP (1608)
R909	1-218-895-11	s	RESISTOR,CHIP 100K 1/10W(1608)
R911	1-218-871-11	s	RESISTOR,CHIP 10K 1/10W (1608)
R912	1-218-835-11	s	RESISTOR,CHIP 330 1/10W (1608)
R913	1-216-864-11	s	CONDUCTOR, CHIP (1608)
R914	1-216-864-11	s	CONDUCTOR, CHIP (1608)
R915	1-218-895-11	s	RESISTOR,CHIP 100K 1/10W(1608)
R1004	1-218-847-11	s	RESISTOR, CHIP 1K 1/10W (1608)
R1005	1-218-847-11	s	RESISTOR, CHIP 1K 1/10W (1608)
R1006	1-218-847-11	s	RESISTOR, CHIP 1K 1/10W (1608)
R1014	1-216-864-11	s	CONDUCTOR, CHIP (1608)
R1015	1-216-864-11	s	CONDUCTOR, CHIP (1608)
R1016	1-216-864-11	s	CONDUCTOR, CHIP (1608)
R1017	1-216-864-11	s	CONDUCTOR, CHIP (1608)
R1018	1-216-864-11	s	CONDUCTOR, CHIP (1608)
R1019	1-216-864-11	s	CONDUCTOR, CHIP (1608)
R1021	1-216-864-11	s	CONDUCTOR, CHIP (1608)
R1022	1-216-864-11	s	CONDUCTOR, CHIP (1608)
R1023	1-216-864-11	s	CONDUCTOR, CHIP (1608)
R1024	1-216-864-11	s	CONDUCTOR, CHIP (1608)
R1025	1-216-864-11	s	CONDUCTOR, CHIP (1608)
R1026	1-216-864-11	s	CONDUCTOR, CHIP (1608)
R1027	1-216-864-11	s	CONDUCTOR, CHIP (1608)
R1028	1-216-864-11	s	CONDUCTOR, CHIP (1608)
R1037	1-216-864-11	s	CONDUCTOR, CHIP (1608)
R1038	1-216-864-11	s	CONDUCTOR, CHIP (1608)
R1039	1-216-864-11	s	CONDUCTOR, CHIP (1608)
R1040	1-216-864-11	s	CONDUCTOR, CHIP (1608)
R1042	1-218-847-11	s	RESISTOR, CHIP 1K 1/10W (1608)
R1043	1-218-847-11	s	RESISTOR, CHIP 1K 1/10W (1608)
R1044	1-218-847-11	s	RESISTOR, CHIP 1K 1/10W (1608)
R1052	1-218-895-11	s	RESISTOR,CHIP 100K 1/10W(1608)
R1053	1-218-895-11	s	RESISTOR,CHIP 100K 1/10W(1608)
R1054	1-216-864-11	s	CONDUCTOR, CHIP (1608)
R1055	1-216-864-11	s	CONDUCTOR, CHIP (1608)
R1056	1-216-864-11	s	CONDUCTOR, CHIP (1608)
RB100	1-233-810-21	s	RES, NETWORK 100K (3216)
RB101	1-233-810-21	s	RES, NETWORK 100K (3216)
RB102	1-239-409-11	s	RESISTOR NETWORK 47 (3216)
RB103	1-239-409-11	s	RESISTOR NETWORK 47 (3216)
RB104	1-233-810-21	s	RES, NETWORK 100K (3216)
RB106	1-234-397-11	s	NETWORK, RES (8 GANG) 100K
RB107	1-234-397-11	s	NETWORK, RES (8 GANG) 100K
RB108	1-233-575-11	s	RES, CHIP NETWORK 22
RB109	1-233-575-11	s	RES, CHIP NETWORK 22
RB110	1-233-575-11	s	RES, CHIP NETWORK 22
RB111	1-233-575-11	s	RES, CHIP NETWORK 22
RB112	1-233-575-11	s	RES, CHIP NETWORK 22

(DPR-229M BOARD [SUFFIX 14-])

Ref. No. or Q'ty	Part No.	SP	Description
RB113	1-234-397-11	s	NETWORK, RES (8 GANG) 100K
RB114	1-233-576-11	s	RESISTOR,CHIP NETWORK 100
RB115	1-233-576-11	s	RESISTOR,CHIP NETWORK 100
RB116	1-233-810-21	s	RES, NETWORK 100K (3216)
RB117	1-234-397-11	s	NETWORK, RES (8 GANG) 100K
RB118	1-234-397-11	s	NETWORK, RES (8 GANG) 100K
RB119	1-234-397-11	s	NETWORK, RES (8 GANG) 100K
RB120	1-234-397-11	s	NETWORK, RES (8 GANG) 100K
RB121	1-233-576-11	s	RESISTOR,CHIP NETWORK 100
RB122	1-233-576-11	s	RESISTOR,CHIP NETWORK 100
RB123	1-234-397-11	s	NETWORK, RES (8 GANG) 100K
RB200	1-233-411-11	s	RESISTOR,CHIP NETWORK 220/3216
RB201	1-233-411-11	s	RESISTOR,CHIP NETWORK 220/3216
RB202	1-233-411-11	s	RESISTOR,CHIP NETWORK 220/3216
RB203	1-233-411-11	s	RESISTOR,CHIP NETWORK 220/3216
RB204	1-233-411-11	s	RESISTOR,CHIP NETWORK 220/3216
RB205	1-233-575-11	s	RES, CHIP NETWORK 22
RB206	1-233-575-11	s	RES, CHIP NETWORK 22
RB400	1-239-409-11	s	RESISTOR NETWORK 47 (3216)
RB401	1-239-409-11	s	RESISTOR NETWORK 47 (3216)
RB402	1-239-409-11	s	RESISTOR NETWORK 47 (3216)
RB403	1-239-409-11	s	RESISTOR NETWORK 47 (3216)
RB404	1-239-409-11	s	RESISTOR NETWORK 47 (3216)
RB500	1-233-414-11	s	RESISTOR,CHIP NETWORK 4.7K
RB501	1-233-412-11	s	RESISTOR,CHIP NETWORK 1K
RB502	1-233-412-11	s	RESISTOR,CHIP NETWORK 1K
RB503	1-233-412-11	s	RESISTOR,CHIP NETWORK 1K
RB504	1-233-412-11	s	RESISTOR,CHIP NETWORK 1K
RB505	1-233-412-11	s	RESISTOR,CHIP NETWORK 1K
RB506	1-233-412-11	s	RESISTOR,CHIP NETWORK 1K
RB507	1-233-412-11	s	RESISTOR,CHIP NETWORK 1K
RB508	1-233-412-11	s	RESISTOR,CHIP NETWORK 1K
RB509	1-233-412-11	s	RESISTOR,CHIP NETWORK 1K
RB510	1-233-412-11	s	RESISTOR,CHIP NETWORK 1K
RB511	1-233-412-11	s	RESISTOR,CHIP NETWORK 1K
RB512	1-233-412-11	s	RESISTOR,CHIP NETWORK 1K
RB513	1-233-412-11	s	RESISTOR,CHIP NETWORK 1K
RB514	1-233-412-11	s	RESISTOR,CHIP NETWORK 1K
RB515	1-233-412-11	s	RESISTOR,CHIP NETWORK 1K
RB516	1-234-523-21	s	RESISTOR,CHIP NETWORK
RB517	1-234-523-21	s	RESISTOR,CHIP NETWORK
RB518	1-234-523-21	s	RESISTOR,CHIP NETWORK
RB600	1-234-523-21	s	RESISTOR,CHIP NETWORK
RB601	1-234-523-21	s	RESISTOR,CHIP NETWORK
RB602	1-234-523-21	s	RESISTOR,CHIP NETWORK
RB700	1-233-810-21	s	RES, NETWORK 100K (3216)
RB701	1-233-810-21	s	RES, NETWORK 100K (3216)
RB702	1-233-810-21	s	RES, NETWORK 100K (3216)
RB703	1-233-810-21	s	RES, NETWORK 100K (3216)
RB704	1-233-810-21	s	RES, NETWORK 100K (3216)
RB705	1-233-810-21	s	RES, NETWORK 100K (3216)
RB706	1-233-810-21	s	RES, NETWORK 100K (3216)
RB707	1-233-810-21	s	RES, NETWORK 100K (3216)
RB708	1-233-810-21	s	RES, NETWORK 100K (3216)
RB709	1-234-397-11	s	NETWORK, RES (8 GANG) 100K
RB710	1-234-397-11	s	NETWORK, RES (8 GANG) 100K
RB711	1-234-397-11	s	NETWORK, RES (8 GANG) 100K
RB712	1-234-397-11	s	NETWORK, RES (8 GANG) 100K
RB801	1-233-810-21	s	RES, NETWORK 100K (3216)

(DPR-229M BOARD [SUFFIX 14-])

Ref. No. or Q'ty	Part No.	SP	Description
RB804	1-233-411-11	s	RESISTOR,CHIP NETWORK 220/3216
RB805	1-233-411-11	s	RESISTOR,CHIP NETWORK 220/3216
RB806	1-233-411-11	s	RESISTOR,CHIP NETWORK 220/3216
RB807	1-233-414-11	s	RESISTOR,CHIP NETWORK 4.7K
RB808	1-239-409-11	s	RESISTOR NETWORK 47 (3216)
RB809	1-239-409-11	s	RESISTOR NETWORK 47 (3216)
RB810	1-239-409-11	s	RESISTOR NETWORK 47 (3216)
RB811	1-239-409-11	s	RESISTOR NETWORK 47 (3216)
RB812	1-239-409-11	s	RESISTOR NETWORK 47 (3216)
RB813	1-233-810-21	s	RES, NETWORK 100K (3216)
RB814	1-233-810-21	s	RES, NETWORK 100K (3216)
RB815	1-233-810-21	s	RES, NETWORK 100K (3216)
RB816	1-233-810-21	s	RES, NETWORK 100K (3216)
RB817	1-233-414-11	s	RESISTOR,CHIP NETWORK 4.7K
RB818	1-236-908-11	s	RESISTOR,NETWORK 10K (3216)
X200	1-781-809-21	s	OSCILLATOR, CRYSTAL (SMD)

DPR-229D BOARD [SUFFIX 12, 13]

[Lot No. 434 - 554] DVW-2000/P

*1: [Lot No. 434 - 554] [Board No. suffix 12, 13]
*2: [Lot No. 461 - 554] [Board No. suffix 13]

Ref. No. or Q'ty	Part No.	SP	Description
1pc	A-8347-765-A	s	MOUNTED CIRCUIT BOARD, DPR-229D
4pcs	3-191-747-01	o	SUPPORT (M3), HEXAGON
8pcs	7-682-545-04	s	SCREW +B3X4
1pc	3-179-084-11	s	LEVER (R), C BOARD
1pc	3-179-085-11	s	LEVER (L), C BOARD
C100	1-131-992-11	s	CAP, CERAMIC 100000PF F 1608
C101	1-131-992-11	s	CAP, CERAMIC 100000PF F 1608
C102	1-162-927-11	s	CAPACITOR,CERAMIC 100PF/50V CH
C103	1-126-394-11	s	CAPACITOR,ELECT 10MF/16V(CHIP)
C104	1-131-992-11	s	CAP, CERAMIC 100000PF F 1608
C105	1-131-992-11	s	CAP, CERAMIC 100000PF F 1608
C106	1-131-992-11	s	CAP, CERAMIC 100000PF F 1608
C107	1-131-992-11	s	CAP, CERAMIC 100000PF F 1608
C108	1-131-992-11	s	CAP, CERAMIC 100000PF F 1608
C109	1-131-992-11	s	CAP, CERAMIC 100000PF F 1608
C110	1-131-992-11	s	CAP, CERAMIC 100000PF F 1608
C111	1-131-992-11	s	CAP, CERAMIC 100000PF F 1608
C112	1-131-992-11	s	CAP, CERAMIC 100000PF F 1608
C113	1-131-992-11	s	CAP, CERAMIC 100000PF F 1608
C114	1-131-992-11	s	CAP, CERAMIC 100000PF F 1608
C115	1-131-992-11	s	CAP, CERAMIC 100000PF F 1608
C116	1-131-992-11	s	CAP, CERAMIC 100000PF F 1608
C117	1-131-992-11	s	CAP, CERAMIC 100000PF F 1608
C118	1-131-992-11	s	CAP, CERAMIC 100000PF F 1608
C119	1-131-992-11	s	CAP, CERAMIC 100000PF F 1608
C120	1-131-992-11	s	CAP, CERAMIC 100000PF F 1608
C121	1-131-992-11	s	CAP, CERAMIC 100000PF F 1608
C122	1-131-992-11	s	CAP, CERAMIC 100000PF F 1608
C123	1-131-992-11	s	CAP, CERAMIC 100000PF F 1608
C124	1-131-992-11	s	CAP, CERAMIC 100000PF F 1608
C125	1-131-992-11	s	CAP, CERAMIC 100000PF F 1608
C126	1-131-992-11	s	CAP, CERAMIC 100000PF F 1608
C127	1-131-992-11	s	CAP, CERAMIC 100000PF F 1608
C200	1-126-394-11	s	CAPACITOR,ELECT 10MF/16V(CHIP)
C201	1-131-992-11	s	CAP, CERAMIC 100000PF F 1608
C202	1-131-992-11	s	CAP, CERAMIC 100000PF F 1608
C203	1-131-992-11	s	CAP, CERAMIC 100000PF F 1608
C204	1-126-394-11	s	CAPACITOR,ELECT 10MF/16V(CHIP)
C205	1-131-992-11	s	CAP, CERAMIC 100000PF F 1608
C206	1-131-992-11	s	CAP, CERAMIC 100000PF F 1608
C207	1-126-394-11	s	CAPACITOR,ELECT 10MF/16V(CHIP)
C208	1-131-992-11	s	CAP, CERAMIC 100000PF F 1608
C209	1-131-992-11	s	CAP, CERAMIC 100000PF F 1608
C210	1-131-992-11	s	CAP, CERAMIC 100000PF F 1608
C211	1-127-692-11	s	CAP, CHIP CERAMIC 10MF B 3216
C212	1-127-692-11	s	CAP, CHIP CERAMIC 10MF B 3216
C213	1-131-992-11	s	CAP, CERAMIC 100000PF F 1608
C214	1-131-992-11	s	CAP, CERAMIC 100000PF F 1608
C215	1-131-992-11	s	CAP, CERAMIC 100000PF F 1608
C216	1-131-992-11	s	CAP, CERAMIC 100000PF F 1608
C217	1-131-992-11	s	CAP, CERAMIC 100000PF F 1608
C218	1-131-992-11	s	CAP, CERAMIC 100000PF F 1608
C219	1-131-992-11	s	CAP, CERAMIC 100000PF F 1608
C220	1-131-992-11	s	CAP, CERAMIC 100000PF F 1608
C221	1-131-992-11	s	CAP, CERAMIC 100000PF F 1608

(DPR-229D BOARD [SUFFIX 12, 13])

Ref. No. or Q'ty	Part No.	SP	Description
C222	1-131-992-11	s	CAP, CERAMIC 100000PF F 1608
C223	1-131-992-11	s	CAP, CERAMIC 100000PF F 1608
C224	1-131-992-11	s	CAP, CERAMIC 100000PF F 1608
C225	1-131-992-11	s	CAP, CERAMIC 100000PF F 1608
C226	1-131-992-11	s	CAP, CERAMIC 100000PF F 1608
C227	1-131-992-11	s	CAP, CERAMIC 100000PF F 1608
C228	1-131-992-11	s	CAP, CERAMIC 100000PF F 1608
C234	1-131-992-11	s	CAP, CERAMIC 100000PF F 1608
C235	1-131-992-11	s	CAP, CERAMIC 100000PF F 1608
C300	1-131-992-11	s	CAP, CERAMIC 100000PF F 1608
C301	1-131-992-11	s	CAP, CERAMIC 100000PF F 1608
C302	1-131-992-11	s	CAP, CERAMIC 100000PF F 1608
C303	1-131-992-11	s	CAP, CERAMIC 100000PF F 1608
C304	1-126-394-11	s	CAPACITOR,ELECT 10MF/16V(CHIP)
C315	1-131-992-11	s	CAP, CERAMIC 100000PF F 1608
C316	1-131-992-11	s	CAP, CERAMIC 100000PF F 1608
C329	1-131-992-11	s	CAP, CERAMIC 100000PF F 1608
C330	1-131-992-11	s	CAP, CERAMIC 100000PF F 1608
C331	1-126-394-11	s	CAPACITOR,ELECT 10MF/16V(CHIP)
C332	1-131-992-11	s	CAP, CERAMIC 100000PF F 1608
C333	1-131-992-11	s	CAP, CERAMIC 100000PF F 1608
C334	1-131-992-11	s	CAP, CERAMIC 100000PF F 1608
C335	1-131-992-11	s	CAP, CERAMIC 100000PF F 1608
C404	1-131-992-11	s	CAP, CERAMIC 100000PF F 1608
C412	1-126-394-11	s	CAPACITOR,ELECT 10MF/16V(CHIP)
C413	1-131-992-11	s	CAP, CERAMIC 100000PF F 1608
C415	1-131-992-11	s	CAP, CERAMIC 100000PF F 1608
C417	1-131-992-11	s	CAP, CERAMIC 100000PF F 1608
C418	1-126-394-11	s	CAPACITOR,ELECT 10MF/16V(CHIP)
C419	1-131-992-11	s	CAP, CERAMIC 100000PF F 1608
C420	1-131-992-11	s	CAP, CERAMIC 100000PF F 1608
C421	1-131-992-11	s	CAP, CERAMIC 100000PF F 1608
C422	1-131-992-11	s	CAP, CERAMIC 100000PF F 1608
C423	1-131-992-11	s	CAP, CERAMIC 100000PF F 1608
C424	1-131-992-11	s	CAP, CERAMIC 100000PF F 1608
C425	1-131-992-11	s	CAP, CERAMIC 100000PF F 1608
C426	1-131-992-11	s	CAP, CERAMIC 100000PF F 1608
C427	1-131-992-11	s	CAP, CERAMIC 100000PF F 1608
C428	1-131-992-11	s	CAP, CERAMIC 100000PF F 1608
C429	1-131-992-11	s	CAP, CERAMIC 100000PF F 1608
C430	1-131-992-11	s	CAP, CERAMIC 100000PF F 1608
C431	1-131-992-11	s	CAP, CERAMIC 100000PF F 1608
C432	1-131-992-11	s	CAP, CERAMIC 100000PF F 1608
C433	1-126-394-11	s	CAPACITOR,ELECT 10MF/16V(CHIP)
C434	1-126-394-11	s	CAPACITOR,ELECT 10MF/16V(CHIP)
C435	1-131-992-11	s	CAP, CERAMIC 100000PF F 1608
C437	1-131-992-11	s	CAP, CERAMIC 100000PF F 1608
C439	1-131-992-11	s	CAP, CERAMIC 100000PF F 1608
C440	1-131-992-11	s	CAP, CERAMIC 100000PF F 1608
C500	1-131-992-11	s	CAP, CERAMIC 100000PF F 1608
C501	1-131-992-11	s	CAP, CERAMIC 100000PF F 1608
C502	1-131-992-11	s	CAP, CERAMIC 100000PF F 1608
C503	1-131-992-11	s	CAP, CERAMIC 100000PF F 1608
C504	1-131-992-11	s	CAP, CERAMIC 100000PF F 1608
C505	1-131-992-11	s	CAP, CERAMIC 100000PF F 1608
C506	1-131-992-11	s	CAP, CERAMIC 100000PF F 1608
C507	1-131-992-11	s	CAP, CERAMIC 100000PF F 1608
C508	1-131-992-11	s	CAP, CERAMIC 100000PF F 1608
C509	1-131-992-11	s	CAP, CERAMIC 100000PF F 1608

(DPR-229D BOARD [SUFFIX 12, 13])

Ref. No. or Q'ty	Part No.	SP	Description
C510	1-131-992-11	s	CAP, CERAMIC 100000PF F 1608
C511	1-131-992-11	s	CAP, CERAMIC 100000PF F 1608
C512	1-131-992-11	s	CAP, CERAMIC 100000PF F 1608
C513	1-131-992-11	s	CAP, CERAMIC 100000PF F 1608
C514	1-131-992-11	s	CAP, CERAMIC 100000PF F 1608
C515	1-131-992-11	s	CAP, CERAMIC 100000PF F 1608
C516	1-131-992-11	s	CAP, CERAMIC 100000PF F 1608
C517	1-131-992-11	s	CAP, CERAMIC 100000PF F 1608
C518	1-131-992-11	s	CAP, CERAMIC 100000PF F 1608
C519	1-131-992-11	s	CAP, CERAMIC 100000PF F 1608
C520	1-131-992-11	s	CAP, CERAMIC 100000PF F 1608
C521	1-131-992-11	s	CAP, CERAMIC 100000PF F 1608
C522	1-131-992-11	s	CAP, CERAMIC 100000PF F 1608
C523	1-126-394-11	s	CAPACITOR,ELECT 10MF/16V(CHIP)
C524	1-131-992-11	s	CAP, CERAMIC 100000PF F 1608
C525	1-131-992-11	s	CAP, CERAMIC 100000PF F 1608
C526	1-162-922-11	s	CAPACITOR,CERAMIC 39PF/50V CH
C527	1-131-992-11	s	CAP, CERAMIC 100000PF F 1608
C528	1-131-992-11	s	CAP, CERAMIC 100000PF F 1608
C529	1-131-992-11	s	CAP, CERAMIC 100000PF F 1608
C530	1-131-992-11	s	CAP, CERAMIC 100000PF F 1608
C531	1-131-992-11	s	CAP, CERAMIC 100000PF F 1608
C532	1-131-992-11	s	CAP, CERAMIC 100000PF F 1608
C533	1-131-992-11	s	CAP, CERAMIC 100000PF F 1608
C534	1-131-992-11	s	CAP, CERAMIC 100000PF F 1608
C535	1-131-992-11	s	CAP, CERAMIC 100000PF F 1608
C536	1-131-992-11	s	CAP, CERAMIC 100000PF F 1608
C537	1-131-992-11	s	CAP, CERAMIC 100000PF F 1608
C538	1-131-992-11	s	CAP, CERAMIC 100000PF F 1608
C539	1-131-992-11	s	CAP, CERAMIC 100000PF F 1608
C540	1-131-992-11	s	CAP, CERAMIC 100000PF F 1608
C541	1-131-992-11	s	CAP, CERAMIC 100000PF F 1608
C542	1-131-992-11	s	CAP, CERAMIC 100000PF F 1608
C543	1-131-992-11	s	CAP, CERAMIC 100000PF F 1608
C544	1-131-992-11	s	CAP, CERAMIC 100000PF F 1608
C545	1-131-992-11	s	CAP, CERAMIC 100000PF F 1608
C546	1-131-992-11	s	CAP, CERAMIC 100000PF F 1608
C547	1-131-992-11	s	CAP, CERAMIC 100000PF F 1608
C548	1-131-992-11	s	CAP, CERAMIC 100000PF F 1608
C549	1-131-992-11	s	CAP, CERAMIC 100000PF F 1608
C550	1-131-992-11	s	CAP, CERAMIC 100000PF F 1608
C551	1-131-992-11	s	CAP, CERAMIC 100000PF F 1608
C552	1-131-992-11	s	CAP, CERAMIC 100000PF F 1608
C606	1-131-992-11	s	CAP, CERAMIC 100000PF F 1608
C607	1-126-394-11	s	CAPACITOR,ELECT 10MF/16V(CHIP)
C608	1-131-992-11	s	CAP, CERAMIC 100000PF F 1608
C609	1-131-992-11	s	CAP, CERAMIC 100000PF F 1608
C650	1-162-970-11	s	CAPACITOR CERAMIC 0.01MF/25V B
C651	1-162-970-11	s	CAPACITOR CERAMIC 0.01MF/25V B
C652	1-131-992-11	s	CAP, CERAMIC 100000PF F 1608
C653	1-131-992-11	s	CAP, CERAMIC 100000PF F 1608
C654	1-126-394-11	s	CAPACITOR,ELECT 10MF/16V(CHIP)
C655	1-131-992-11	s	CAP, CERAMIC 100000PF F 1608
C656	1-131-992-11	s	CAP, CERAMIC 100000PF F 1608
C657	1-131-992-11	s	CAP, CERAMIC 100000PF F 1608
C658	1-131-992-11	s	CAP, CERAMIC 100000PF F 1608
C659	1-131-992-11	s	CAP, CERAMIC 100000PF F 1608
C660	1-131-992-11	s	CAP, CERAMIC 100000PF F 1608
C661	1-131-992-11	s	CAP, CERAMIC 100000PF F 1608

(DPR-229D BOARD [SUFFIX 12, 13])

Ref. No. or Q'ty	Part No.	SP	Description
C662	1-131-992-11	s	CAP, CERAMIC 100000PF F 1608
C663	1-126-394-11	s	CAPACITOR,ELECT 10MF/16V(CHIP)
C664	1-165-870-21	s	CAPACITOR, ELECT 100MF(6.3X6)
C665	1-126-394-11	s	CAPACITOR,ELECT 10MF/16V(CHIP)
C666	1-131-992-11	s	CAP, CERAMIC 100000PF F 1608
C667	1-131-992-11	s	CAP, CERAMIC 100000PF F 1608
C668	1-131-992-11	s	CAP, CERAMIC 100000PF F 1608
C669	1-131-992-11	s	CAP, CERAMIC 100000PF F 1608
C670	1-131-992-11	s	CAP, CERAMIC 100000PF F 1608
C671	1-131-992-11	s	CAP, CERAMIC 100000PF F 1608
C672	1-131-992-11	s	CAP, CERAMIC 100000PF F 1608
C673	1-131-992-11	s	CAP, CERAMIC 100000PF F 1608
C674	1-131-992-11	s	CAP, CERAMIC 100000PF F 1608
C675	1-131-992-11	s	CAP, CERAMIC 100000PF F 1608
C676	1-131-992-11	s	CAP, CERAMIC 100000PF F 1608
C677	1-131-992-11	s	CAP, CERAMIC 100000PF F 1608
C678	1-131-992-11	s	CAP, CERAMIC 100000PF F 1608
C679	1-131-992-11	s	CAP, CERAMIC 100000PF F 1608
C680	1-131-992-11	s	CAP, CERAMIC 100000PF F 1608
C681	1-131-992-11	s	CAP, CERAMIC 100000PF F 1608
C682	1-131-992-11	s	CAP, CERAMIC 100000PF F 1608
C683	1-131-992-11	s	CAP, CERAMIC 100000PF F 1608
C684	1-131-992-11	s	CAP, CERAMIC 100000PF F 1608
C685	1-162-925-11	s	CAPACITOR,CERAMIC 68PF/50V CH
C686	1-165-872-21	s	CAPACITOR,SOLID ELECT 47MF
C687	1-126-394-11	s	CAPACITOR,ELECT 10MF/16V(CHIP)
C688	1-126-394-11	s	CAPACITOR,ELECT 10MF/16V(CHIP)
C689	1-131-992-11	s	CAP, CERAMIC 100000PF F 1608
C690	1-131-992-11	s	CAP, CERAMIC 100000PF F 1608
C700	1-131-992-11	s	CAP, CERAMIC 100000PF F 1608
C701	1-113-503-11	s	CAPACITOR,CERAMIC 3900PF CH
C702	1-162-968-11	s	CAPACITOR,CERAMIC 4700PF/50V B
C703	1-131-992-11	s	CAP, CERAMIC 100000PF F 1608
C704	1-131-992-11	s	CAP, CERAMIC 100000PF F 1608
C705	1-131-992-11	s	CAP, CERAMIC 100000PF F 1608
C706	1-131-992-11	s	CAP, CERAMIC 100000PF F 1608
C707	1-131-992-11	s	CAP, CERAMIC 100000PF F 1608
C708	1-131-992-11	s	CAP, CERAMIC 100000PF F 1608
C709	1-131-992-11	s	CAP, CERAMIC 100000PF F 1608
C710	1-131-992-11	s	CAP, CERAMIC 100000PF F 1608
C711	1-131-992-11	s	CAP, CERAMIC 100000PF F 1608
C712	1-131-992-11	s	CAP, CERAMIC 100000PF F 1608
C713	1-113-503-11	s	CAPACITOR,CERAMIC 3900PF CH
C714	1-162-968-11	s	CAPACITOR,CERAMIC 4700PF/50V B
C715	1-131-992-11	s	CAP, CERAMIC 100000PF F 1608
C716	1-131-992-11	s	CAP, CERAMIC 100000PF F 1608
C717	1-131-992-11	s	CAP, CERAMIC 100000PF F 1608
C718	1-131-992-11	s	CAP, CERAMIC 100000PF F 1608
C719	1-131-992-11	s	CAP, CERAMIC 100000PF F 1608
C720	1-131-992-11	s	CAP, CERAMIC 100000PF F 1608
C721	1-131-992-11	s	CAP, CERAMIC 100000PF F 1608
C722	1-131-992-11	s	CAP, CERAMIC 100000PF F 1608
C723	1-131-992-11	s	CAP, CERAMIC 100000PF F 1608
C724	1-131-992-11	s	CAP, CERAMIC 100000PF F 1608
C800	1-126-394-11	s	CAPACITOR,ELECT 10MF/16V(CHIP)
C801	1-131-992-11	s	CAP, CERAMIC 100000PF F 1608
C802	1-131-992-11	s	CAP, CERAMIC 100000PF F 1608
C803	1-131-992-11	s	CAP, CERAMIC 100000PF F 1608
C804	1-131-992-11	s	CAP, CERAMIC 100000PF F 1608

(DPR-229D BOARD [SUFFIX 12, 13])

Ref. No. or Q'ty	Part No.	SP	Description
C810	1-131-992-11	s	CAP, CERAMIC 100000PF F 1608
C811	1-131-992-11	s	CAP, CERAMIC 100000PF F 1608
C812	1-128-590-11	s	CAPACITOR ELECT 100MF/6.3V(105
C813	1-128-590-11	s	CAPACITOR ELECT 100MF/6.3V(105
C814	1-131-992-11	s	CAP, CERAMIC 100000PF F 1608
C815	1-131-992-11	s	CAP, CERAMIC 100000PF F 1608
C816	1-131-992-11	s	CAP, CERAMIC 100000PF F 1608
C817	1-131-992-11	s	CAP, CERAMIC 100000PF F 1608
C818	1-131-992-11	s	CAP, CERAMIC 100000PF F 1608
C819	1-128-590-11	s	CAPACITOR ELECT 100MF/6.3V(105
C820	1-128-590-11	s	CAPACITOR ELECT 100MF/6.3V(105
C821	1-128-590-11	s	CAPACITOR ELECT 100MF/6.3V(105
C822	1-128-590-11	s	CAPACITOR ELECT 100MF/6.3V(105
C823	1-131-992-11	s	CAP, CERAMIC 100000PF F 1608
C827	1-131-992-11	s	CAP, CERAMIC 100000PF F 1608
C829	1-131-992-11	s	CAP, CERAMIC 100000PF F 1608
C831	1-131-992-11	s	CAP, CERAMIC 100000PF F 1608
C832	1-131-992-11	s	CAP, CERAMIC 100000PF F 1608
C833	1-131-992-11	s	CAP, CERAMIC 100000PF F 1608
C834	1-131-992-11	s	CAP, CERAMIC 100000PF F 1608
C835	1-131-992-11	s	CAP, CERAMIC 100000PF F 1608
C837	1-131-992-11	s	CAP, CERAMIC 100000PF F 1608
C838	1-131-992-11	s	CAP, CERAMIC 100000PF F 1608
C839	1-126-394-11	s	CAPACITOR,ELECT 10MF/16V(CHIP)
C842	1-131-992-11	s	CAP, CERAMIC 100000PF F 1608
C843	1-131-992-11	s	CAP, CERAMIC 100000PF F 1608
C844	1-131-992-11	s	CAP, CERAMIC 100000PF F 1608
C845	1-131-992-11	s	CAP, CERAMIC 100000PF F 1608
C846	1-131-992-11	s	CAP, CERAMIC 100000PF F 1608
C847	1-131-992-11	s	CAP, CERAMIC 100000PF F 1608
C848	1-126-394-11	s	CAPACITOR,ELECT 10MF/16V(CHIP)
C849	1-126-394-11	s	CAPACITOR,ELECT 10MF/16V(CHIP)
C850	1-131-992-11	s	CAP, CERAMIC 100000PF F 1608
C851	1-131-992-11	s	CAP, CERAMIC 100000PF F 1608
C852	1-131-992-11	s	CAP, CERAMIC 100000PF F 1608
C853	1-126-394-11	s	CAPACITOR,ELECT 10MF/16V(CHIP)
C862	1-131-992-11	s	CAP, CERAMIC 100000PF F 1608
C863	1-131-992-11	s	CAP, CERAMIC 100000PF F 1608
C864	1-131-992-11	s	CAP, CERAMIC 100000PF F 1608
C865	1-131-992-11	s	CAP, CERAMIC 100000PF F 1608
C867	1-127-861-11	s	CAP, CERAMIC 2.2MF B (3216)
C868	1-127-861-11	s	CAP, CERAMIC 2.2MF B (3216)
C869	1-131-992-11	s	CAP, CERAMIC 100000PF F 1608
CN16	1-580-789-91	s	PIN, CONNECTOR 6P
E100	1-535-877-22	s	CHIP,CHECKER (TEST POINT)
E200	1-535-877-22	s	CHIP,CHECKER (TEST POINT)
E300	1-535-877-22	s	CHIP,CHECKER (TEST POINT)
E400	1-535-877-22	s	CHIP,CHECKER (TEST POINT)
E401	1-535-877-22	s	CHIP,CHECKER (TEST POINT)
E500	1-535-877-22	s	CHIP,CHECKER (TEST POINT)
E600	1-535-877-22	s	CHIP,CHECKER (TEST POINT)
E700	1-535-877-22	s	CHIP,CHECKER (TEST POINT)
E800	1-535-877-22	s	CHIP,CHECKER (TEST POINT)
F800	⚠ 1-576-270-11	s	FUSE CHIP 4A/125V (6125)
F802	⚠ 1-576-270-11	s	FUSE CHIP 4A/125V (6125)
F803	⚠ 1-576-270-11	s	FUSE CHIP 4A/125V (6125)
FB200	1-469-094-11	s	FERRITE, EMI (SMD)

(DPR-229D BOARD [SUFFIX 12, 13])

Ref. No. or Q'ty	Part No.	SP	Description
FL200	1-239-898-22	s	FILTER, EMI (SMD)
FL600	1-233-674-21	s	FILTER, EMI
FL601	1-233-674-21	s	FILTER, EMI
IC100	8-759-549-15	s	IC SN74LV245APWR
IC101	8-759-549-15	s	IC SN74LV245APWR
IC102	8-759-523-84	s	IC TC74VHC14FT (EL)
IC103	8-759-491-46	s	IC TC74VHCT04AFT (EL)
IC104	8-759-491-46	s	IC TC74VHCT04AFT (EL)
IC105	8-759-523-94	s	IC TC74VHC32FT(EL)
IC106	8-759-549-01	s	IC SN74LV125APWR
IC107	8-759-392-77	s	IC SN74LVC245APW (E20)
IC108	8-759-549-15	s	IC SN74LV245APWR
IC109	8-759-524-07	s	IC TC74VHC138FT(EL)
IC110	8-759-549-15	s	IC SN74LV245APWR
IC111	8-759-491-46	s	IC TC74VHCT04AFT (EL)
IC112	8-759-549-15	s	IC SN74LV245APWR
IC113	8-759-549-15	s	IC SN74LV245APWR
IC114	8-759-549-15	s	IC SN74LV245APWR
IC115	8-759-549-15	s	IC SN74LV245APWR
IC116	8-759-549-15	s	IC SN74LV245APWR
IC117	8-759-549-15	s	IC SN74LV245APWR
IC118	8-759-524-07	s	IC TC74VHC138FT(EL)
IC119	8-759-524-07	s	IC TC74VHC138FT(EL)
IC120	8-759-523-81	s	IC TC74VHC08FT(EL)
IC121	6-706-487-01	s	IC TC7SH08FU(T5RSOYJF)
IC122	8-759-523-92	s	IC TC74VHC21FT(EL)
IC123	8-759-549-15	s	IC SN74LV245APWR
IC124	8-752-392-03	s	IC CXD1095BR
IC125	6-706-487-01	s	IC TC7SH08FU(T5RSOYJF)
IC126	6-706-482-01	s	IC TC7SH00FU(T5RSOYJF)
IC200	8-759-475-55	s	IC TC74LCX574FT(EL)
IC201	8-759-475-55	s	IC TC74LCX574FT(EL)
IC202	8-759-475-55	s	IC TC74LCX574FT(EL)
IC203	8-759-669-41	s	IC SN74LVC125APWR-12
IC204	6-706-484-01	s	IC TC7SH04FU(T5RSOYJF)
IC205	8-759-669-41	s	IC SN74LVC125APWR-12
IC208	8-759-392-77	s	IC SN74LVC245APW (E20)
IC209	8-759-392-77	s	IC SN74LVC245APW (E20)
IC210	8-759-392-77	s	IC SN74LVC245APW (E20)
IC211 *1	6-702-238-11	s	IC HY57V643220CT-7TR
IC217	6-706-484-01	s	IC TC7SH04FU(T5RSOYJF)
IC302	8-759-524-10	s	IC TC74VHC157FT (EL)
IC303	8-759-524-10	s	IC TC74VHC157FT (EL)
IC310	8-759-392-77	s	IC SN74LVC245APW (E20)
IC311	8-759-392-77	s	IC SN74LVC245APW (E20)
IC401	8-759-669-41	s	IC SN74LVC125APWR-12
IC402	8-759-712-31	s	IC SN65LVDT388DBTR
IC404	8-759-712-31	s	IC SN65LVDT388DBTR
IC406	8-759-639-86	s	IC SN65LVDS32DR
IC407	8-759-656-31	o	IC CXD9094AR
IC408	8-759-712-32	s	IC SN65LVDS389DBTR
IC410	8-759-712-32	s	IC SN65LVDS389DBTR
IC412	8-759-712-32	s	IC SN65LVDS389DBTR
IC413	8-759-639-86	s	IC SN65LVDS32DR
IC500	8-759-199-86	s	IC CXD8807BR
IC501	8-759-549-15	s	IC SN74LV245APWR
IC502	8-759-549-15	s	IC SN74LV245APWR

(DPR-229D BOARD [SUFFIX 12, 13])

Ref. No. or Q'ty	Part No.	SP	Description
IC506	8-752-373-24	s	IC CXK48324R-1-T6
IC507	8-752-373-24	s	IC CXK48324R-1-T6
IC508	8-752-373-24	s	IC CXK48324R-1-T6
IC509	8-752-373-24	s	IC CXK48324R-1-T6
IC510	8-752-373-24	s	IC CXK48324R-1-T6
IC601	8-759-524-09	s	IC TC74VHC153FT (EL)
IC602	8-759-475-55	s	IC TC74LCX574FT(EL)
IC603	8-759-475-55	s	IC TC74LCX574FT(EL)
IC653	8-759-549-15	s	IC SN74LV245APWR
IC654	8-759-549-15	s	IC SN74LV245APWR
IC655	8-759-664-03	s	IC LP3964EMPX-ADJ
IC700	8-752-392-03	s	IC CXD1095BR
IC701	6-702-254-01	s	IC DSPB56362PV100-1J21D
IC702	8-759-543-83	s	IC KM416V1204CT-L6
IC703	8-759-543-83	s	IC KM416V1204CT-L6
IC704	6-702-254-01	s	IC DSPB56362PV100-1J21D
IC705	8-759-543-83	s	IC KM416V1204CT-L6
IC706	8-759-543-83	s	IC KM416V1204CT-L6
IC801	8-759-549-15	s	IC SN74LV245APWR
IC802	6-706-487-01	s	IC TC7SH08FU(T5RSOYJF)
IC803	8-759-491-46	s	IC TC74VHCT04AFT (EL)
IC804	8-759-669-41	s	IC SN74LVC125APWR-12
IC805	8-759-475-43	s	IC TC74LCX125FT(EL)
IC808	8-759-549-15	s	IC SN74LV245APWR
IC809	8-759-523-78	s	IC TC74VHC00FT(EL)
IC810	8-759-392-77	s	IC SN74LVC245APW (E20)
IC812	8-759-669-41	s	IC SN74LVC125APWR-12
IC813	8-759-669-41	s	IC SN74LVC125APWR-12
IC814	8-759-669-41	s	IC SN74LVC125APWR-12
IC815	8-759-475-43	s	IC TC74LCX125FT(EL)
IC817	8-759-549-01	s	IC SN74LV125APWR
IC818	8-759-549-15	s	IC SN74LV245APWR
IC819	8-759-524-10	s	IC TC74VHC157FT (EL)
IC822	8-759-549-01	s	IC SN74LV125APWR
IC823	8-759-549-15	s	IC SN74LV245APWR
IC824	8-759-549-15	s	IC SN74LV245APWR
IC825	8-759-549-15	s	IC SN74LV245APWR
IC826	8-759-549-01	s	IC SN74LV125APWR
IC827	6-704-723-01	s	IC XCS20XL-4VQG100C
IC829	8-759-524-10	s	IC TC74VHC157FT (EL)
IC831	8-759-524-27	s	IC TC74VHC244FT(EL)
IC832	6-706-484-01	s	IC TC7SH04FU(T5RSOYJF)
IC833	6-803-242-02	s	IC XC18V02-DPR229IMX-V4.00
IC834	6-803-243-03	s	IC XC18V02-DPR229SX-V3.01
L100	1-412-056-11	s	INDUCTOR 4.7UH (3225)
L101	1-412-056-11	s	INDUCTOR 4.7UH (3225)
L102	1-412-056-11	s	INDUCTOR 4.7UH (3225)
L103	1-412-056-11	s	INDUCTOR 4.7UH (3225)
L200	1-412-056-11	s	INDUCTOR 4.7UH (3225)
L201	1-412-056-11	s	INDUCTOR 4.7UH (3225)
L402	1-412-056-11	s	INDUCTOR 4.7UH (3225)
L405	1-412-056-11	s	INDUCTOR 4.7UH (3225)
L600	1-412-056-11	s	INDUCTOR 4.7UH (3225)
L651	1-412-056-11	s	INDUCTOR 4.7UH (3225)
L800	1-419-630-11	s	COIL, CHOKE 4.7UH
L801	1-419-630-11	s	COIL, CHOKE 4.7UH
L802	1-419-630-11	s	COIL, CHOKE 4.7UH
L803	1-419-630-11	s	COIL, CHOKE 4.7UH
L804	1-412-056-11	s	INDUCTOR 4.7UH (3225)

(DPR-229D BOARD [SUFFIX 12, 13])

Ref. No. or Q'ty	Part No.	SP	Description
L806	1-412-056-11	s	INDUCTOR 4.7UH (3225)
L807	1-412-056-11	s	INDUCTOR 4.7UH (3225)
L808	1-412-056-11	s	INDUCTOR 4.7UH (3225)
Q400	8-729-928-81	s	TRANSISTOR DTC144EE
Q800	8-729-928-81	s	TRANSISTOR DTC144EE
Q801	8-729-045-53	s	TRANSISTOR SI4431DY-T1
Q802	8-729-140-63	s	TRANSISTOR 2SA1611-M5M6
R100	1-218-895-11	s	RESISTOR,CHIP 100K 1/10W(1608)
R101	1-218-895-11	s	RESISTOR,CHIP 100K 1/10W(1608)
R102	1-218-895-11	s	RESISTOR,CHIP 100K 1/10W(1608)
R103	1-218-895-11	s	RESISTOR,CHIP 100K 1/10W(1608)
R105	1-218-895-11	s	RESISTOR,CHIP 100K 1/10W(1608)
R106	1-211-985-11	s	RESISTOR,CHIP 47 1/10W (1608)
R107	1-211-985-11	s	RESISTOR,CHIP 47 1/10W (1608)
R108	1-211-985-11	s	RESISTOR,CHIP 47 1/10W (1608)
R109	1-211-985-11	s	RESISTOR,CHIP 47 1/10W (1608)
R110	1-218-895-11	s	RESISTOR,CHIP 100K 1/10W(1608)
R111	1-218-823-11	s	RESISTOR,CHIP 100 1/10W (1608)
R117	1-218-863-11	s	RESISTOR,CHIP 4.7K 1/10W(1608)
R118	1-218-863-11	s	RESISTOR,CHIP 4.7K 1/10W(1608)
R124	1-218-863-11	s	RESISTOR,CHIP 4.7K 1/10W(1608)
R125	1-218-863-11	s	RESISTOR,CHIP 4.7K 1/10W(1608)
R130	1-216-864-11	s	CONDUCTOR, CHIP (1608)
R131	1-216-864-11	s	CONDUCTOR, CHIP (1608)
R132	1-216-864-11	s	CONDUCTOR, CHIP (1608)
R133	1-216-864-11	s	CONDUCTOR, CHIP (1608)
R134	1-218-863-11	s	RESISTOR,CHIP 4.7K 1/10W(1608)
R136	1-211-977-11	s	RESISTOR,CHIP 22 1/10W (1608)
R138	1-218-895-11	s	RESISTOR,CHIP 100K 1/10W(1608)
R139	1-218-895-11	s	RESISTOR,CHIP 100K 1/10W(1608)
R141	1-216-864-11	s	CONDUCTOR, CHIP (1608)
R143	1-218-895-11	s	RESISTOR,CHIP 100K 1/10W(1608)
R144	1-211-977-11	s	RESISTOR,CHIP 22 1/10W (1608)
R200	1-218-831-11	s	RESISTOR, CHIP 220 1/10W(1608)
R202	1-216-864-11	s	CONDUCTOR, CHIP (1608)
R203	1-211-985-11	s	RESISTOR,CHIP 47 1/10W (1608)
R204	1-211-977-11	s	RESISTOR,CHIP 22 1/10W (1608)
R207	1-216-864-11	s	CONDUCTOR, CHIP (1608)
R208	1-218-871-11	s	RESISTOR,CHIP 10K 1/10W (1608)
R209	1-216-864-11	s	CONDUCTOR, CHIP (1608)
R210	1-216-864-11	s	CONDUCTOR, CHIP (1608)
R212	1-216-864-11	s	CONDUCTOR, CHIP (1608)
R213	1-216-864-11	s	CONDUCTOR, CHIP (1608)
R215	1-216-864-11	s	CONDUCTOR, CHIP (1608)
R216	1-216-864-11	s	CONDUCTOR, CHIP (1608)
R217	1-216-864-11	s	CONDUCTOR, CHIP (1608)
R218	1-211-977-11	s	RESISTOR,CHIP 22 1/10W (1608)
R219	1-218-863-11	s	RESISTOR,CHIP 4.7K 1/10W(1608)
R300	1-216-864-11	s	CONDUCTOR, CHIP (1608)
R301	1-216-864-11	s	CONDUCTOR, CHIP (1608)
R302	1-216-864-11	s	CONDUCTOR, CHIP (1608)
R303	1-218-863-11	s	RESISTOR,CHIP 4.7K 1/10W(1608)
R304	1-218-863-11	s	RESISTOR,CHIP 4.7K 1/10W(1608)
R305	1-218-863-11	s	RESISTOR,CHIP 4.7K 1/10W(1608)
R306	1-218-895-11	s	RESISTOR,CHIP 100K 1/10W(1608)
R307	1-218-863-11	s	RESISTOR,CHIP 4.7K 1/10W(1608)
R349	1-216-864-11	s	CONDUCTOR, CHIP (1608)
R351	1-211-977-11	s	RESISTOR,CHIP 22 1/10W (1608)

(DPR-229D BOARD [SUFFIX 12, 13])

Ref. No. or Q'ty	Part No.	SP	Description
R352	1-211-977-11	s	RESISTOR,CHIP 22 1/10W (1608)
R353	1-218-863-11	s	RESISTOR,CHIP 4.7K 1/10W(1608)
R354	1-218-863-11	s	RESISTOR,CHIP 4.7K 1/10W(1608)
R355	1-218-863-11	s	RESISTOR,CHIP 4.7K 1/10W(1608)
R357	1-218-895-11	s	RESISTOR,CHIP 100K 1/10W(1608)
R358	1-218-895-11	s	RESISTOR,CHIP 100K 1/10W(1608)
R359	1-211-977-11	s	RESISTOR,CHIP 22 1/10W (1608)
R400	1-218-895-11	s	RESISTOR,CHIP 100K 1/10W(1608)
R402	1-211-985-11	s	RESISTOR,CHIP 47 1/10W (1608)
R403	1-211-985-11	s	RESISTOR,CHIP 47 1/10W (1608)
R421	1-218-823-11	s	RESISTOR,CHIP 100 1/10W (1608)
R422	1-218-823-11	s	RESISTOR,CHIP 100 1/10W (1608)
R423	1-218-823-11	s	RESISTOR,CHIP 100 1/10W (1608)
R424	1-218-823-11	s	RESISTOR,CHIP 100 1/10W (1608)
R428	1-218-823-11	s	RESISTOR,CHIP 100 1/10W (1608)
R429	1-218-823-11	s	RESISTOR,CHIP 100 1/10W (1608)
R430	1-218-823-11	s	RESISTOR,CHIP 100 1/10W (1608)
R431	1-218-823-11	s	RESISTOR,CHIP 100 1/10W (1608)
R432	1-211-977-11	s	RESISTOR,CHIP 22 1/10W (1608)
R433	1-211-977-11	s	RESISTOR,CHIP 22 1/10W (1608)
R434	1-211-977-11	s	RESISTOR,CHIP 22 1/10W (1608)
R435	1-216-864-11	s	CONDUCTOR, CHIP (1608)
R436	1-216-864-11	s	CONDUCTOR, CHIP (1608)
R437	1-211-985-11	s	RESISTOR,CHIP 47 1/10W (1608)
R439	1-216-864-11	s	CONDUCTOR, CHIP (1608)
R440	1-218-895-11	s	RESISTOR,CHIP 100K 1/10W(1608)
R442	1-211-985-11	s	RESISTOR,CHIP 47 1/10W (1608)
R443	1-218-863-11	s	RESISTOR,CHIP 4.7K 1/10W(1608)
R502	1-216-864-11	s	CONDUCTOR, CHIP (1608)
R503	1-216-864-11	s	CONDUCTOR, CHIP (1608)
R605	1-216-864-11	s	CONDUCTOR, CHIP (1608)
R606	1-216-864-11	s	CONDUCTOR, CHIP (1608)
R607	1-216-864-11	s	CONDUCTOR, CHIP (1608)
R620	1-218-895-11	s	RESISTOR,CHIP 100K 1/10W(1608)
R650	1-218-847-11	s	RESISTOR, CHIP 1K 1/10W (1608)
R652	1-216-864-11	s	CONDUCTOR, CHIP (1608)
R653	1-216-864-11	s	CONDUCTOR, CHIP (1608)
R654	1-216-864-11	s	CONDUCTOR, CHIP (1608)
R657	1-218-871-11	s	RESISTOR,CHIP 10K 1/10W (1608)
R658	1-216-864-11	s	CONDUCTOR, CHIP (1608)
R659	1-216-864-11	s	CONDUCTOR, CHIP (1608)
R660	1-216-864-11	s	CONDUCTOR, CHIP (1608)
R661	1-218-903-11	s	RESISTOR,CHIP 220K 1/10W(1608)
R662	1-218-878-11	s	RESISTOR,CHIP 20K 1/10W (1608)
R663	1-218-878-11	s	RESISTOR,CHIP 20K 1/10W (1608)
R666	1-211-990-11	s	RESISTOR,CHIP 75 1/10W (1608)
R668	1-211-990-11	s	RESISTOR,CHIP 75 1/10W (1608)
R670	1-218-903-11	s	RESISTOR,CHIP 220K 1/10W(1608)
R671	1-218-903-11	s	RESISTOR,CHIP 220K 1/10W(1608)
R672	1-218-871-11	s	RESISTOR,CHIP 10K 1/10W (1608)
R673	1-218-856-11	s	RESISTOR,CHIP 2.4K 1/10W(1608)
R674	1-218-871-11	s	RESISTOR,CHIP 10K 1/10W (1608)
R676	1-211-899-11	s	RESISTOR,CHIP 0.221/4W (3225)
R715	1-216-864-11	s	CONDUCTOR, CHIP (1608)
R716	1-216-864-11	s	CONDUCTOR, CHIP (1608)
R717	1-216-864-11	s	CONDUCTOR, CHIP (1608)
R718	1-216-864-11	s	CONDUCTOR, CHIP (1608)
R719	1-216-864-11	s	CONDUCTOR, CHIP (1608)
R720	1-216-864-11	s	CONDUCTOR, CHIP (1608)

(DPR-229D BOARD [SUFFIX 12, 13])

Ref. No. or Q'ty	Part No.	SP	Description
R722	1-216-864-11	s	CONDUCTOR, CHIP (1608)
R723	1-216-864-11	s	CONDUCTOR, CHIP (1608)
R724	1-216-864-11	s	CONDUCTOR, CHIP (1608)
R725	1-216-864-11	s	CONDUCTOR, CHIP (1608)
R726	1-216-864-11	s	CONDUCTOR, CHIP (1608)
R727	1-216-864-11	s	CONDUCTOR, CHIP (1608)
R728	1-216-864-11	s	CONDUCTOR, CHIP (1608)
R729	1-216-864-11	s	CONDUCTOR, CHIP (1608)
R738	1-218-847-11	s	RESISTOR, CHIP 1K 1/10W (1608)
R739	1-218-847-11	s	RESISTOR, CHIP 1K 1/10W (1608)
R740	1-218-847-11	s	RESISTOR, CHIP 1K 1/10W (1608)
R748	1-216-864-11	s	CONDUCTOR, CHIP (1608)
R749	1-216-864-11	s	CONDUCTOR, CHIP (1608)
R750	1-216-864-11	s	CONDUCTOR, CHIP (1608)
R751	1-216-864-11	s	CONDUCTOR, CHIP (1608)
R752	1-216-864-11	s	CONDUCTOR, CHIP (1608)
R753	1-216-864-11	s	CONDUCTOR, CHIP (1608)
R755	1-216-864-11	s	CONDUCTOR, CHIP (1608)
R756	1-216-864-11	s	CONDUCTOR, CHIP (1608)
R757	1-216-864-11	s	CONDUCTOR, CHIP (1608)
R758	1-216-864-11	s	CONDUCTOR, CHIP (1608)
R759	1-216-864-11	s	CONDUCTOR, CHIP (1608)
R760	1-216-864-11	s	CONDUCTOR, CHIP (1608)
R761	1-216-864-11	s	CONDUCTOR, CHIP (1608)
R762	1-216-864-11	s	CONDUCTOR, CHIP (1608)
R771	1-218-847-11	s	RESISTOR, CHIP 1K 1/10W (1608)
R772	1-218-847-11	s	RESISTOR, CHIP 1K 1/10W (1608)
R773	1-218-847-11	s	RESISTOR, CHIP 1K 1/10W (1608)
R796	1-216-864-11	s	CONDUCTOR, CHIP (1608)
R797	1-216-864-11	s	CONDUCTOR, CHIP (1608)
R801	1-216-864-11	s	CONDUCTOR, CHIP (1608)
R802	1-216-864-11	s	CONDUCTOR, CHIP (1608)
R803	1-218-863-11	s	RESISTOR,CHIP 4.7K 1/10W(1608)
R805	1-218-863-11	s	RESISTOR,CHIP 4.7K 1/10W(1608)
R811	1-216-864-11	s	CONDUCTOR, CHIP (1608)
R813	1-218-831-11	s	RESISTOR, CHIP 220 1/10W(1608)
R814	1-218-831-11	s	RESISTOR, CHIP 220 1/10W(1608)
R815	1-218-831-11	s	RESISTOR, CHIP 220 1/10W(1608)
R820	1-211-977-11	s	RESISTOR,CHIP 22 1/10W (1608)
R822	1-211-977-11	s	RESISTOR,CHIP 22 1/10W (1608)
R823	1-211-977-11	s	RESISTOR,CHIP 22 1/10W (1608)
R824	1-211-977-11	s	RESISTOR,CHIP 22 1/10W (1608)
R825	1-211-977-11	s	RESISTOR,CHIP 22 1/10W (1608)
R826	1-211-977-11	s	RESISTOR,CHIP 22 1/10W (1608)
R828	1-211-977-11	s	RESISTOR,CHIP 22 1/10W (1608)
R831	1-211-977-11	s	RESISTOR,CHIP 22 1/10W (1608)
R834	1-218-895-11	s	RESISTOR,CHIP 100K 1/10W(1608)
R835	1-218-895-11	s	RESISTOR,CHIP 100K 1/10W(1608)
R839	1-216-864-11	s	CONDUCTOR, CHIP (1608)
R841	1-211-977-11	s	RESISTOR,CHIP 22 1/10W (1608)
R854	1-211-977-11	s	RESISTOR,CHIP 22 1/10W (1608)
R855	1-211-977-11	s	RESISTOR,CHIP 22 1/10W (1608)
R856	1-211-977-11	s	RESISTOR,CHIP 22 1/10W (1608)
R857	1-211-977-11	s	RESISTOR,CHIP 22 1/10W (1608)
R858	1-211-977-11	s	RESISTOR,CHIP 22 1/10W (1608)
R859	1-211-977-11	s	RESISTOR,CHIP 22 1/10W (1608)
R860	1-211-977-11	s	RESISTOR,CHIP 22 1/10W (1608)
R861	1-211-977-11	s	RESISTOR,CHIP 22 1/10W (1608)
R862	1-211-977-11	s	RESISTOR,CHIP 22 1/10W (1608)

(DPR-229D BOARD [SUFFIX 12, 13])

Ref. No. or Q'ty	Part No.	SP	Description
R863	1-218-871-11	s	RESISTOR,CHIP 10K 1/10W (1608)
R864	1-218-847-11	s	RESISTOR, CHIP 1K 1/10W (1608)
R865	1-218-847-11	s	RESISTOR, CHIP 1K 1/10W (1608)
R866	1-218-835-11	s	RESISTOR,CHIP 330 1/10W (1608)
R867	1-218-835-11	s	RESISTOR,CHIP 330 1/10W (1608)
R1037	1-216-864-11	s	CONDUCTOR, CHIP (1608)
R1038	1-216-864-11	s	CONDUCTOR, CHIP (1608)
R1039	1-216-864-11	s	CONDUCTOR, CHIP (1608)
R1040	1-216-864-11	s	CONDUCTOR, CHIP (1608)
R1052	1-218-895-11	s	RESISTOR,CHIP 100K 1/10W(1608)
R1053	1-218-895-11	s	RESISTOR,CHIP 100K 1/10W(1608)
R1054	1-216-864-11	s	CONDUCTOR, CHIP (1608)
RB100	1-233-810-21	s	RES, NETWORK 100K (3216)
RB101	1-233-810-21	s	RES, NETWORK 100K (3216)
RB102	1-239-409-11	s	RESISTOR NETWORK 47 (1608)
RB103	1-239-409-11	s	RESISTOR NETWORK 47 (1608)
RB104	1-233-810-21	s	RES, NETWORK 100K (3216)
RB106	1-234-397-11	s	NETWORK, RES (8 GANG) 100K
RB107	1-234-397-11	s	NETWORK, RES (8 GANG) 100K
RB108	1-233-575-11	s	RES, CHIP NETWORK 22
RB109	1-233-575-11	s	RES, CHIP NETWORK 22
RB110	1-233-575-11	s	RES, CHIP NETWORK 22
RB111	1-233-575-11	s	RES, CHIP NETWORK 22
RB112	1-233-575-11	s	RES, CHIP NETWORK 22
RB113	1-234-397-11	s	NETWORK, RES (8 GANG) 100K
RB114	1-233-576-11	s	RESISTOR,CHIP NETWORK 100
RB115	1-233-576-11	s	RESISTOR,CHIP NETWORK 100
RB116	1-233-810-21	s	RES, NETWORK 100K (3216)
RB117	1-234-397-11	s	NETWORK, RES (8 GANG) 100K
RB118	1-234-397-11	s	NETWORK, RES (8 GANG) 100K
RB119	1-234-397-11	s	NETWORK, RES (8 GANG) 100K
RB120	1-234-397-11	s	NETWORK, RES (8 GANG) 100K
RB121	1-233-576-11	s	RESISTOR,CHIP NETWORK 100
RB122	1-233-576-11	s	RESISTOR,CHIP NETWORK 100
RB123	1-234-397-11	s	NETWORK, RES (8 GANG) 100K
RB200	1-233-411-11	s	RESISTOR,CHIP NETWORK 220/3216
RB201	1-233-411-11	s	RESISTOR,CHIP NETWORK 220/3216
RB202	1-233-411-11	s	RESISTOR,CHIP NETWORK 220/3216
RB203	1-233-411-11	s	RESISTOR,CHIP NETWORK 220/3216
RB204	1-233-411-11	s	RESISTOR,CHIP NETWORK 220/3216
RB205	1-233-575-11	s	RES, CHIP NETWORK 22
RB206	1-233-575-11	s	RES, CHIP NETWORK 22
RB300	1-233-810-21	s	RES, NETWORK 100K (3216)
RB400	1-239-409-11	s	RESISTOR NETWORK 47 (1608)
RB401	1-239-409-11	s	RESISTOR NETWORK 47 (1608)
RB402	1-239-409-11	s	RESISTOR NETWORK 47 (1608)
RB403	1-239-409-11	s	RESISTOR NETWORK 47 (1608)
RB404	1-239-409-11	s	RESISTOR NETWORK 47 (1608)
RB500	1-233-414-11	s	RESISTOR,CHIP NETWORK 4.7K
RB501	1-233-412-11	s	RESISTOR,CHIP NETWORK 1K
RB502	1-233-412-11	s	RESISTOR,CHIP NETWORK 1K
RB503	1-233-412-11	s	RESISTOR,CHIP NETWORK 1K
RB504	1-233-412-11	s	RESISTOR,CHIP NETWORK 1K
RB505	1-233-412-11	s	RESISTOR,CHIP NETWORK 1K
RB506	1-233-412-11	s	RESISTOR,CHIP NETWORK 1K
RB507	1-233-412-11	s	RESISTOR,CHIP NETWORK 1K
RB508	1-233-412-11	s	RESISTOR,CHIP NETWORK 1K
RB509	1-233-412-11	s	RESISTOR,CHIP NETWORK 1K

(DPR-229D BOARD [SUFFIX 12, 13])

Ref. No. or Q'ty	Part No.	SP	Description
RB510	1-233-412-11	s	RESISTOR,CHIP NETWORK 1K
RB511	1-233-412-11	s	RESISTOR,CHIP NETWORK 1K
RB512	1-233-412-11	s	RESISTOR,CHIP NETWORK 1K
RB513	1-233-412-11	s	RESISTOR,CHIP NETWORK 1K
RB514	1-233-412-11	s	RESISTOR,CHIP NETWORK 1K
RB515	1-233-412-11	s	RESISTOR,CHIP NETWORK 1K
RB516	1-234-523-21	s	RESISTOR,CHIP NETWORK
RB517	1-234-523-21	s	RESISTOR,CHIP NETWORK
RB518	1-234-523-21	s	RESISTOR,CHIP NETWORK
RB600	1-234-523-21	s	RESISTOR,CHIP NETWORK
RB601	1-234-523-21	s	RESISTOR,CHIP NETWORK
RB602	1-234-523-21	s	RESISTOR,CHIP NETWORK
RB700	1-233-810-21	s	RES, NETWORK 100K (3216)
RB701	1-233-810-21	s	RES, NETWORK 100K (3216)
RB702	1-233-810-21	s	RES, NETWORK 100K (3216)
RB703	1-233-810-21	s	RES, NETWORK 100K (3216)
RB704	1-233-810-21	s	RES, NETWORK 100K (3216)
RB705	1-233-810-21	s	RES, NETWORK 100K (3216)
RB706	1-233-810-21	s	RES, NETWORK 100K (3216)
RB707	1-233-810-21	s	RES, NETWORK 100K (3216)
RB708	1-233-810-21	s	RES, NETWORK 100K (3216)
RB709	1-234-397-11	s	NETWORK, RES (8 GANG) 100K
RB710	1-234-397-11	s	NETWORK, RES (8 GANG) 100K
RB801	1-233-810-21	s	RES, NETWORK 100K (3216)
RB804	1-233-411-11	s	RESISTOR,CHIP NETWORK 220/3216
RB805	1-233-411-11	s	RESISTOR,CHIP NETWORK 220/3216
RB806	1-233-411-11	s	RESISTOR,CHIP NETWORK 220/3216
RB807	1-233-414-11	s	RESISTOR,CHIP NETWORK 4.7K
RB808	1-239-409-11	s	RESISTOR NETWORK 47 (1608)
RB809	1-239-409-11	s	RESISTOR NETWORK 47 (1608)
RB810	1-239-409-11	s	RESISTOR NETWORK 47 (1608)
RB811	1-239-409-11	s	RESISTOR NETWORK 47 (1608)
RB812	1-239-409-11	s	RESISTOR NETWORK 47 (1608)
RB813	1-233-810-21	s	RES, NETWORK 100K (3216)
RB814	1-233-810-21	s	RES, NETWORK 100K (3216)
RB815	1-233-810-21	s	RES, NETWORK 100K (3216)
RB816	1-233-810-21	s	RES, NETWORK 100K (3216)
RB817	1-233-414-11	s	RESISTOR,CHIP NETWORK 4.7K
RB818	1-236-908-11	s	RESISTOR,NETWORK 10K (3216)
RB819	1-233-810-21	s	RES, NETWORK 100K (3216)
X200	1-781-809-21	s	OSCILLATOR, CRYSTAL (SMD)

DPR-229D BOARD [SUFFIX 14-]

[Lot No. 561 -] DVW-2000/P

Ref. No. or Q'ty	Part No.	SP	Description
1pc	A-8347-765-A	s	MOUNTED CIRCUIT BOARD, DPR-229D
1pc	3-179-084-11	s	LEVER (R), C BOARD
1pc	3-179-085-11	s	LEVER (L), C BOARD
C100	1-131-992-11	s	CAP, CERAMIC 100000PF F 1608
C101	1-131-992-11	s	CAP, CERAMIC 100000PF F 1608
C102	1-162-927-11	s	CAPACITOR,CERAMIC 100PF/50V CH
C103	1-126-394-11	s	CAPACITOR,ELECT 10MF/16V(CHIP)
C104	1-131-992-11	s	CAP, CERAMIC 100000PF F 1608
C105	1-131-992-11	s	CAP, CERAMIC 100000PF F 1608
C106	1-131-992-11	s	CAP, CERAMIC 100000PF F 1608
C107	1-131-992-11	s	CAP, CERAMIC 100000PF F 1608
C108	1-131-992-11	s	CAP, CERAMIC 100000PF F 1608
C109	1-131-992-11	s	CAP, CERAMIC 100000PF F 1608
C110	1-131-992-11	s	CAP, CERAMIC 100000PF F 1608
C111	1-131-992-11	s	CAP, CERAMIC 100000PF F 1608
C112	1-131-992-11	s	CAP, CERAMIC 100000PF F 1608
C113	1-131-992-11	s	CAP, CERAMIC 100000PF F 1608
C114	1-131-992-11	s	CAP, CERAMIC 100000PF F 1608
C115	1-131-992-11	s	CAP, CERAMIC 100000PF F 1608
C116	1-131-992-11	s	CAP, CERAMIC 100000PF F 1608
C117	1-131-992-11	s	CAP, CERAMIC 100000PF F 1608
C118	1-131-992-11	s	CAP, CERAMIC 100000PF F 1608
C119	1-131-992-11	s	CAP, CERAMIC 100000PF F 1608
C120	1-131-992-11	s	CAP, CERAMIC 100000PF F 1608
C121	1-131-992-11	s	CAP, CERAMIC 100000PF F 1608
C122	1-131-992-11	s	CAP, CERAMIC 100000PF F 1608
C123	1-131-992-11	s	CAP, CERAMIC 100000PF F 1608
C124	1-131-992-11	s	CAP, CERAMIC 100000PF F 1608
C125	1-131-992-11	s	CAP, CERAMIC 100000PF F 1608
C126	1-131-992-11	s	CAP, CERAMIC 100000PF F 1608
C127	1-131-992-11	s	CAP, CERAMIC 100000PF F 1608
C200	1-126-394-11	s	CAPACITOR,ELECT 10MF/16V(CHIP)
C201	1-131-992-11	s	CAP, CERAMIC 100000PF F 1608
C202	1-131-992-11	s	CAP, CERAMIC 100000PF F 1608
C203	1-131-992-11	s	CAP, CERAMIC 100000PF F 1608
C204	1-126-394-11	s	CAPACITOR,ELECT 10MF/16V(CHIP)
C205	1-131-992-11	s	CAP, CERAMIC 100000PF F 1608
C206	1-131-992-11	s	CAP, CERAMIC 100000PF F 1608
C207	1-126-394-11	s	CAPACITOR,ELECT 10MF/16V(CHIP)
C208	1-131-992-11	s	CAP, CERAMIC 100000PF F 1608
C209	1-131-992-11	s	CAP, CERAMIC 100000PF F 1608
C210	1-131-992-11	s	CAP, CERAMIC 100000PF F 1608
C211	1-127-692-91	s	CAP, CHIP CERAMIC 10MF B 3216
C212	1-127-692-91	s	CAP, CHIP CERAMIC 10MF B 3216
C213	1-131-992-11	s	CAP, CERAMIC 100000PF F 1608
C214	1-131-992-11	s	CAP, CERAMIC 100000PF F 1608
C215	1-131-992-11	s	CAP, CERAMIC 100000PF F 1608
C216	1-131-992-11	s	CAP, CERAMIC 100000PF F 1608
C217	1-131-992-11	s	CAP, CERAMIC 100000PF F 1608
C218	1-131-992-11	s	CAP, CERAMIC 100000PF F 1608
C219	1-131-992-11	s	CAP, CERAMIC 100000PF F 1608
C220	1-131-992-11	s	CAP, CERAMIC 100000PF F 1608
C221	1-131-992-11	s	CAP, CERAMIC 100000PF F 1608
C222	1-131-992-11	s	CAP, CERAMIC 100000PF F 1608
C223	1-131-992-11	s	CAP, CERAMIC 100000PF F 1608
C224	1-131-992-11	s	CAP, CERAMIC 100000PF F 1608
C225	1-131-992-11	s	CAP, CERAMIC 100000PF F 1608

(DPR-229D BOARD [SUFFIX 14-])

Ref. No. or Q'ty	Part No.	SP	Description
C226	1-131-992-11	s	CAP, CERAMIC 100000PF F 1608
C227	1-131-992-11	s	CAP, CERAMIC 100000PF F 1608
C228	1-131-992-11	s	CAP, CERAMIC 100000PF F 1608
C234	1-131-992-11	s	CAP, CERAMIC 100000PF F 1608
C235	1-131-992-11	s	CAP, CERAMIC 100000PF F 1608
C300	1-131-992-11	s	CAP, CERAMIC 100000PF F 1608
C301	1-131-992-11	s	CAP, CERAMIC 100000PF F 1608
C302	1-131-992-11	s	CAP, CERAMIC 100000PF F 1608
C303	1-131-992-11	s	CAP, CERAMIC 100000PF F 1608
C304	1-126-394-11	s	CAPACITOR,ELECT 10MF/16V(CHIP)
C315	1-131-992-11	s	CAP, CERAMIC 100000PF F 1608
C316	1-131-992-11	s	CAP, CERAMIC 100000PF F 1608
C329	1-131-992-11	s	CAP, CERAMIC 100000PF F 1608
C330	1-131-992-11	s	CAP, CERAMIC 100000PF F 1608
C331	1-126-394-11	s	CAPACITOR,ELECT 10MF/16V(CHIP)
C332	1-131-992-11	s	CAP, CERAMIC 100000PF F 1608
C333	1-131-992-11	s	CAP, CERAMIC 100000PF F 1608
C334	1-131-992-11	s	CAP, CERAMIC 100000PF F 1608
C335	1-131-992-11	s	CAP, CERAMIC 100000PF F 1608
C404	1-131-992-11	s	CAP, CERAMIC 100000PF F 1608
C412	1-126-394-11	s	CAPACITOR,ELECT 10MF/16V(CHIP)
C413	1-131-992-11	s	CAP, CERAMIC 100000PF F 1608
C440	1-131-992-11	s	CAP, CERAMIC 100000PF F 1608
C500	1-131-992-11	s	CAP, CERAMIC 100000PF F 1608
C501	1-131-992-11	s	CAP, CERAMIC 100000PF F 1608
C502	1-131-992-11	s	CAP, CERAMIC 100000PF F 1608
C503	1-131-992-11	s	CAP, CERAMIC 100000PF F 1608
C504	1-131-992-11	s	CAP, CERAMIC 100000PF F 1608
C505	1-131-992-11	s	CAP, CERAMIC 100000PF F 1608
C506	1-131-992-11	s	CAP, CERAMIC 100000PF F 1608
C507	1-131-992-11	s	CAP, CERAMIC 100000PF F 1608
C508	1-131-992-11	s	CAP, CERAMIC 100000PF F 1608
C509	1-131-992-11	s	CAP, CERAMIC 100000PF F 1608
C510	1-131-992-11	s	CAP, CERAMIC 100000PF F 1608
C511	1-131-992-11	s	CAP, CERAMIC 100000PF F 1608
C512	1-131-992-11	s	CAP, CERAMIC 100000PF F 1608
C513	1-131-992-11	s	CAP, CERAMIC 100000PF F 1608
C514	1-131-992-11	s	CAP, CERAMIC 100000PF F 1608
C515	1-131-992-11	s	CAP, CERAMIC 100000PF F 1608
C516	1-131-992-11	s	CAP, CERAMIC 100000PF F 1608
C517	1-131-992-11	s	CAP, CERAMIC 100000PF F 1608
C518	1-131-992-11	s	CAP, CERAMIC 100000PF F 1608
C519	1-131-992-11	s	CAP, CERAMIC 100000PF F 1608
C520	1-131-992-11	s	CAP, CERAMIC 100000PF F 1608
C521	1-131-992-11	s	CAP, CERAMIC 100000PF F 1608
C522	1-131-992-11	s	CAP, CERAMIC 100000PF F 1608
C523	1-126-394-11	s	CAPACITOR,ELECT 10MF/16V(CHIP)
C524	1-131-992-11	s	CAP, CERAMIC 100000PF F 1608
C525	1-131-992-11	s	CAP, CERAMIC 100000PF F 1608
C526	1-162-922-11	s	CAPACITOR,CERAMIC 39PF/50V CH
C527	1-131-992-11	s	CAP, CERAMIC 100000PF F 1608
C528	1-131-992-11	s	CAP, CERAMIC 100000PF F 1608
C529	1-131-992-11	s	CAP, CERAMIC 100000PF F 1608
C530	1-131-992-11	s	CAP, CERAMIC 100000PF F 1608
C531	1-131-992-11	s	CAP, CERAMIC 100000PF F 1608
C532	1-131-992-11	s	CAP, CERAMIC 100000PF F 1608
C533	1-131-992-11	s	CAP, CERAMIC 100000PF F 1608
C534	1-131-992-11	s	CAP, CERAMIC 100000PF F 1608
C535	1-131-992-11	s	CAP, CERAMIC 100000PF F 1608

(DPR-229D BOARD [SUFFIX 14-])

Ref. No. or Q'ty	Part No.	SP	Description
C536	1-131-992-11	s	CAP, CERAMIC 100000PF F 1608
C537	1-131-992-11	s	CAP, CERAMIC 100000PF F 1608
C538	1-131-992-11	s	CAP, CERAMIC 100000PF F 1608
C539	1-131-992-11	s	CAP, CERAMIC 100000PF F 1608
C540	1-131-992-11	s	CAP, CERAMIC 100000PF F 1608
C541	1-131-992-11	s	CAP, CERAMIC 100000PF F 1608
C542	1-131-992-11	s	CAP, CERAMIC 100000PF F 1608
C543	1-131-992-11	s	CAP, CERAMIC 100000PF F 1608
C544	1-131-992-11	s	CAP, CERAMIC 100000PF F 1608
C545	1-131-992-11	s	CAP, CERAMIC 100000PF F 1608
C546	1-131-992-11	s	CAP, CERAMIC 100000PF F 1608
C547	1-131-992-11	s	CAP, CERAMIC 100000PF F 1608
C548	1-131-992-11	s	CAP, CERAMIC 100000PF F 1608
C549	1-131-992-11	s	CAP, CERAMIC 100000PF F 1608
C550	1-131-992-11	s	CAP, CERAMIC 100000PF F 1608
C551	1-131-992-11	s	CAP, CERAMIC 100000PF F 1608
C552	1-131-992-11	s	CAP, CERAMIC 100000PF F 1608
C606	1-131-992-11	s	CAP, CERAMIC 100000PF F 1608
C607	1-126-394-11	s	CAPACITOR,ELECT 10MF/16V(CHIP)
C608	1-131-992-11	s	CAP, CERAMIC 100000PF F 1608
C609	1-131-992-11	s	CAP, CERAMIC 100000PF F 1608
C664	1-165-870-21	s	CAPACITOR, ELECT 100MF(6.3X6)
C685	1-162-925-11	s	CAPACITOR,CERAMIC 68PF/50V CH
C686	1-165-872-21	s	CAPACITOR,SOLID ELECT 47MF
C700	1-131-992-11	s	CAP, CERAMIC 100000PF F 1608
C701	1-113-503-11	s	CAPACITOR,CERAMIC 3900PF CH
C702	1-162-968-11	s	CAPACITOR,CERAMIC 4700PF/50V B
C703	1-131-992-11	s	CAP, CERAMIC 100000PF F 1608
C704	1-131-992-11	s	CAP, CERAMIC 100000PF F 1608
C705	1-131-992-11	s	CAP, CERAMIC 100000PF F 1608
C706	1-131-992-11	s	CAP, CERAMIC 100000PF F 1608
C707	1-131-992-11	s	CAP, CERAMIC 100000PF F 1608
C708	1-131-992-11	s	CAP, CERAMIC 100000PF F 1608
C709	1-131-992-11	s	CAP, CERAMIC 100000PF F 1608
C710	1-131-992-11	s	CAP, CERAMIC 100000PF F 1608
C711	1-131-992-11	s	CAP, CERAMIC 100000PF F 1608
C712	1-131-992-11	s	CAP, CERAMIC 100000PF F 1608
C713	1-113-503-11	s	CAPACITOR,CERAMIC 3900PF CH
C714	1-162-968-11	s	CAPACITOR,CERAMIC 4700PF/50V B
C715	1-131-992-11	s	CAP, CERAMIC 100000PF F 1608
C716	1-131-992-11	s	CAP, CERAMIC 100000PF F 1608
C717	1-131-992-11	s	CAP, CERAMIC 100000PF F 1608
C718	1-131-992-11	s	CAP, CERAMIC 100000PF F 1608
C719	1-131-992-11	s	CAP, CERAMIC 100000PF F 1608
C720	1-131-992-11	s	CAP, CERAMIC 100000PF F 1608
C721	1-131-992-11	s	CAP, CERAMIC 100000PF F 1608
C722	1-131-992-11	s	CAP, CERAMIC 100000PF F 1608
C723	1-131-992-11	s	CAP, CERAMIC 100000PF F 1608
C724	1-131-992-11	s	CAP, CERAMIC 100000PF F 1608
C810	1-131-992-11	s	CAP, CERAMIC 100000PF F 1608
C811	1-131-992-11	s	CAP, CERAMIC 100000PF F 1608
C812	1-128-590-11	s	CAPACITOR ELECT 100MF/6.3V(105
C813	1-128-590-11	s	CAPACITOR ELECT 100MF/6.3V(105
C814	1-131-992-11	s	CAP, CERAMIC 100000PF F 1608
C815	1-131-992-11	s	CAP, CERAMIC 100000PF F 1608
C816	1-131-992-11	s	CAP, CERAMIC 100000PF F 1608
C817	1-131-992-11	s	CAP, CERAMIC 100000PF F 1608
C818	1-131-992-11	s	CAP, CERAMIC 100000PF F 1608
C819	1-128-590-11	s	CAPACITOR ELECT 100MF/6.3V(105

(DPR-229D BOARD [SUFFIX 14-])

Ref. No. or Q'ty	Part No.	SP	Description
C820	1-128-590-11	s	CAPACITOR ELECT 100MF/6.3V(105
C821	1-128-590-11	s	CAPACITOR ELECT 100MF/6.3V(105
C822	1-128-590-11	s	CAPACITOR ELECT 100MF/6.3V(105
C823	1-131-992-11	s	CAP, CERAMIC 100000PF F 1608
C827	1-131-992-11	s	CAP, CERAMIC 100000PF F 1608
C829	1-131-992-11	s	CAP, CERAMIC 100000PF F 1608
C831	1-131-992-11	s	CAP, CERAMIC 100000PF F 1608
C832	1-131-992-11	s	CAP, CERAMIC 100000PF F 1608
C835	1-131-992-11	s	CAP, CERAMIC 100000PF F 1608
C837	1-131-992-11	s	CAP, CERAMIC 100000PF F 1608
C838	1-131-992-11	s	CAP, CERAMIC 100000PF F 1608
C839	1-126-394-11	s	CAPACITOR,ELECT 10MF/16V(CHIP)
C842	1-131-992-11	s	CAP, CERAMIC 100000PF F 1608
C843	1-131-992-11	s	CAP, CERAMIC 100000PF F 1608
C844	1-131-992-11	s	CAP, CERAMIC 100000PF F 1608
C845	1-131-992-11	s	CAP, CERAMIC 100000PF F 1608
C847	1-131-992-11	s	CAP, CERAMIC 100000PF F 1608
C849	1-126-394-11	s	CAPACITOR,ELECT 10MF/16V(CHIP)
C850	1-131-992-11	s	CAP, CERAMIC 100000PF F 1608
C851	1-131-992-11	s	CAP, CERAMIC 100000PF F 1608
C852	1-131-992-11	s	CAP, CERAMIC 100000PF F 1608
C853	1-126-394-11	s	CAPACITOR,ELECT 10MF/16V(CHIP)
C862	1-131-992-11	s	CAP, CERAMIC 100000PF F 1608
C864	1-131-992-11	s	CAP, CERAMIC 100000PF F 1608
C865	1-131-992-11	s	CAP, CERAMIC 100000PF F 1608
C867	1-127-861-11	s	CAP, CERAMIC 2.2MF B (3216)
C868	1-127-861-11	s	CAP, CERAMIC 2.2MF B (3216)
C869	1-131-992-11	s	CAP, CERAMIC 100000PF F 1608
CN16	1-580-789-91	s	PIN, CONNECTOR 6P
E100	1-535-877-22	s	CHIP,CHECKER (TEST POINT)
E200	1-535-877-22	s	CHIP,CHECKER (TEST POINT)
E300	1-535-877-22	s	CHIP,CHECKER (TEST POINT)
E400	1-535-877-22	s	CHIP,CHECKER (TEST POINT)
E401	1-535-877-22	s	CHIP,CHECKER (TEST POINT)
E500	1-535-877-22	s	CHIP,CHECKER (TEST POINT)
E600	1-535-877-22	s	CHIP,CHECKER (TEST POINT)
E700	1-535-877-22	s	CHIP,CHECKER (TEST POINT)
E800	1-535-877-22	s	CHIP,CHECKER (TEST POINT)
F800	⚠ 1-576-270-11	s	FUSE CHIP 4A/125V (6125)
F802	⚠ 1-576-270-11	s	FUSE CHIP 4A/125V (6125)
F803	⚠ 1-576-270-11	s	FUSE CHIP 4A/125V (6125)
FB200	1-469-094-21	s	FERRITE, EMI (SMD)
FL200	1-239-898-22	s	FILTER, EMI (SMD)
FL600	1-233-674-21	s	FILTER, EMI
FL601	1-233-674-21	s	FILTER, EMI
IC100	8-759-549-15	s	IC SN74LV245APWR
IC101	8-759-549-15	s	IC SN74LV245APWR
IC102	8-759-523-84	s	IC TC74VHC14FT (EL)
IC103	8-759-491-46	s	IC TC74VHCT04AFT (EL)
IC104	8-759-491-46	s	IC TC74VHCT04AFT (EL)
IC105	8-759-523-94	s	IC TC74VHC32FT(EL)
IC106	8-759-549-01	s	IC SN74LV125APWR
IC107	8-759-392-77	s	IC SN74LVC245APW (E20)
IC108	8-759-549-15	s	IC SN74LV245APWR
IC109	8-759-524-07	s	IC TC74VHC138FT(EL)
IC110	8-759-549-15	s	IC SN74LV245APWR

(DPR-229D BOARD [SUFFIX 14-])

Ref. No. or Q'ty	Part No.	SP	Description
IC111	8-759-491-46	s	IC TC74VHCT04AFT (EL)
IC112	8-759-549-15	s	IC SN74LV245APWR
IC113	8-759-549-15	s	IC SN74LV245APWR
IC114	8-759-549-15	s	IC SN74LV245APWR
IC115	8-759-549-15	s	IC SN74LV245APWR
IC116	8-759-549-15	s	IC SN74LV245APWR
IC117	8-759-549-15	s	IC SN74LV245APWR
IC118	8-759-524-07	s	IC TC74VHC138FT(EL)
IC119	8-759-524-07	s	IC TC74VHC138FT(EL)
IC120	8-759-523-81	s	IC TC74VHC08FT(EL)
IC121	6-706-487-01	s	IC TC7SH08FU(T5RSOYJF)
IC122	8-759-523-92	s	IC TC74VHC21FT(EL)
IC123	8-759-549-15	s	IC SN74LV245APWR
IC124	8-752-392-03	s	IC CXD1095BR
IC125	6-706-487-01	s	IC TC7SH08FU(T5RSOYJF)
IC126	6-706-482-01	s	IC TC7SH00FU(T5RSOYJF)
IC200	8-759-475-55	s	IC TC74LCX574FT(EL)
IC201	8-759-475-55	s	IC TC74LCX574FT(EL)
IC202	8-759-475-55	s	IC TC74LCX574FT(EL)
IC203	8-759-669-41	s	IC SN74LVC125APWR-12
IC204	6-706-484-01	s	IC TC7SH04FU(T5RSOYJF)
IC205	8-759-669-41	s	IC SN74LVC125APWR-12
IC208	8-759-392-77	s	IC SN74LVC245APW (E20)
IC209	8-759-392-77	s	IC SN74LVC245APW (E20)
IC210	8-759-392-77	s	IC SN74LVC245APW (E20)
IC217	6-706-484-01	s	IC TC7SH04FU(T5RSOYJF)
IC302	8-759-524-10	s	IC TC74VHC157FT (EL)
IC303	8-759-524-10	s	IC TC74VHC157FT (EL)
IC310	8-759-392-77	s	IC SN74LVC245APW (E20)
IC311	8-759-392-77	s	IC SN74LVC245APW (E20)
IC401	8-759-669-41	s	IC SN74LVC125APWR-12
IC413	8-759-639-86	s	IC SN65LVDS32DR
IC500	8-759-199-86	s	IC CXD8807BR
IC501	8-759-549-15	s	IC SN74LV245APWR
IC502	8-759-549-15	s	IC SN74LV245APWR
IC506	8-752-373-24	s	IC CXK48324R-1-T6
IC507	8-752-373-24	s	IC CXK48324R-1-T6
IC508	8-752-373-24	s	IC CXK48324R-1-T6
IC509	8-752-373-24	s	IC CXK48324R-1-T6
IC510	8-752-373-24	s	IC CXK48324R-1-T6
IC601	8-759-524-09	s	IC TC74VHC153FT (EL)
IC602	8-759-475-55	s	IC TC74LCX574FT(EL)
IC603	8-759-475-55	s	IC TC74LCX574FT(EL)
IC655	8-759-664-03	s	IC LP3964EMPX-ADJ
IC700	8-752-392-03	s	IC CXD1095BR
IC701	6-702-254-01	s	IC DSPB56362PV100-1J21D
IC702	8-759-543-83	s	IC KM416V1204CT-L6
IC703	8-759-543-83	s	IC KM416V1204CT-L6
IC704	6-702-254-01	s	IC DSPB56362PV100-1J21D
IC705	8-759-543-83	s	IC KM416V1204CT-L6
IC706	8-759-543-83	s	IC KM416V1204CT-L6
IC801	8-759-549-15	s	IC SN74LV245APWR
IC802	6-706-487-01	s	IC TC7SH08FU(T5RSOYJF)
IC803	8-759-491-46	s	IC TC74VHCT04AFT (EL)
IC804	8-759-669-41	s	IC SN74LVC125APWR-12
IC805	8-759-475-43	s	IC TC74LCX125FT(EL)
IC808	8-759-549-15	s	IC SN74LV245APWR
IC809	8-759-523-78	s	IC TC74VHC00FT(EL)
IC810	8-759-392-77	s	IC SN74LVC245APW (E20)

(DPR-229D BOARD [SUFFIX 14-])

Ref. No. or Q'ty	Part No.	SP	Description
IC812	8-759-669-41	s	IC SN74LVC125APWR-12
IC815	8-759-475-43	s	IC TC74LCX125FT(EL)
IC817	8-759-549-01	s	IC SN74LV125APWR
IC818	8-759-549-15	s	IC SN74LV245APWR
IC819	8-759-524-10	s	IC TC74VHC157FT (EL)
IC822	8-759-549-01	s	IC SN74LV125APWR
IC823	8-759-549-15	s	IC SN74LV245APWR
IC825	8-759-549-15	s	IC SN74LV245APWR
IC826	8-759-549-01	s	IC SN74LV125APWR
IC829	8-759-524-10	s	IC TC74VHC157FT (EL)
IC831	8-759-524-27	s	IC TC74VHC244FT(EL)
IC832	6-706-484-01	s	IC TC7SH04FU(T5RSOYJF)
IC833	6-803-242-02	s	IC XC18V02-DPR229IMX-V4.00
L100	1-412-056-11	s	INDUCTOR 4.7UH (3225)
L101	1-412-056-11	s	INDUCTOR 4.7UH (3225)
L102	1-412-056-11	s	INDUCTOR 4.7UH (3225)
L103	1-412-056-11	s	INDUCTOR 4.7UH (3225)
L200	1-412-056-11	s	INDUCTOR 4.7UH (3225)
L201	1-412-056-11	s	INDUCTOR 4.7UH (3225)
L402	1-412-056-11	s	INDUCTOR 4.7UH (3225)
L600	1-412-056-11	s	INDUCTOR 4.7UH (3225)
L651	1-412-056-11	s	INDUCTOR 4.7UH (3225)
L800	1-419-630-11	s	COIL, CHOKE 4.7UH
L801	1-419-630-11	s	COIL, CHOKE 4.7UH
L802	1-419-630-11	s	COIL, CHOKE 4.7UH
L803	1-419-630-11	s	COIL, CHOKE 4.7UH
L804	1-412-056-11	s	INDUCTOR 4.7UH (3225)
L806	1-412-056-11	s	INDUCTOR 4.7UH (3225)
L808	1-412-056-11	s	INDUCTOR 4.7UH (3225)
Q800	8-729-928-81	s	TRANSISTOR DTC144EE
Q801	8-729-045-53	s	TRANSISTOR SI4431DY-T1
Q802	8-729-140-63	s	TRANSISTOR 2SA1611-M5M6
R1	1-218-895-11	s	RESISTOR,CHIP 100K 1/10W(1608)
R2	1-218-895-11	s	RESISTOR,CHIP 100K 1/10W(1608)
R4	1-218-863-11	s	RESISTOR,CHIP 4.7K 1/10W(1608)
R5	1-218-863-11	s	RESISTOR,CHIP 4.7K 1/10W(1608)
R100	1-218-895-11	s	RESISTOR,CHIP 100K 1/10W(1608)
R101	1-218-895-11	s	RESISTOR,CHIP 100K 1/10W(1608)
R102	1-218-895-11	s	RESISTOR,CHIP 100K 1/10W(1608)
R103	1-218-895-11	s	RESISTOR,CHIP 100K 1/10W(1608)
R105	1-218-895-11	s	RESISTOR,CHIP 100K 1/10W(1608)
R106	1-211-985-11	s	RESISTOR,CHIP 47 1/10W (1608)
R107	1-211-985-11	s	RESISTOR,CHIP 47 1/10W (1608)
R108	1-211-985-11	s	RESISTOR,CHIP 47 1/10W (1608)
R109	1-211-985-11	s	RESISTOR,CHIP 47 1/10W (1608)
R110	1-218-895-11	s	RESISTOR,CHIP 100K 1/10W(1608)
R111	1-218-823-11	s	RESISTOR,CHIP 100 1/10W (1608)
R113	1-218-895-11	s	RESISTOR,CHIP 100K 1/10W(1608)
R114	1-218-895-11	s	RESISTOR,CHIP 100K 1/10W(1608)
R116	1-218-895-11	s	RESISTOR,CHIP 100K 1/10W(1608)
R117	1-218-863-11	s	RESISTOR,CHIP 4.7K 1/10W(1608)
R118	1-218-863-11	s	RESISTOR,CHIP 4.7K 1/10W(1608)
R124	1-218-863-11	s	RESISTOR,CHIP 4.7K 1/10W(1608)
R125	1-218-863-11	s	RESISTOR,CHIP 4.7K 1/10W(1608)
R130	1-216-864-11	s	CONDUCTOR, CHIP (1608)
R131	1-216-864-11	s	CONDUCTOR, CHIP (1608)
R132	1-216-864-11	s	CONDUCTOR, CHIP (1608)

(DPR-229D BOARD [SUFFIX 14-])

Ref. No. or Q'ty	Part No.	SP	Description
R133	1-216-864-11	s	CONDUCTOR, CHIP (1608)
R134	1-218-863-11	s	RESISTOR,CHIP 4.7K 1/10W(1608)
R136	1-211-977-11	s	RESISTOR,CHIP 22 1/10W (1608)
R138	1-218-895-11	s	RESISTOR,CHIP 100K 1/10W(1608)
R139	1-218-895-11	s	RESISTOR,CHIP 100K 1/10W(1608)
R141	1-216-864-11	s	CONDUCTOR, CHIP (1608)
R143	1-218-895-11	s	RESISTOR,CHIP 100K 1/10W(1608)
R144	1-211-977-11	s	RESISTOR,CHIP 22 1/10W (1608)
R200	1-218-831-11	s	RESISTOR, CHIP 220 1/10W(1608)
R202	1-216-864-11	s	CONDUCTOR, CHIP (1608)
R203	1-211-985-11	s	RESISTOR,CHIP 47 1/10W (1608)
R204	1-211-977-11	s	RESISTOR,CHIP 22 1/10W (1608)
R207	1-216-864-11	s	CONDUCTOR, CHIP (1608)
R208	1-218-871-11	s	RESISTOR,CHIP 10K 1/10W (1608)
R209	1-216-864-11	s	CONDUCTOR, CHIP (1608)
R210	1-216-864-11	s	CONDUCTOR, CHIP (1608)
R212	1-216-864-11	s	CONDUCTOR, CHIP (1608)
R213	1-216-864-11	s	CONDUCTOR, CHIP (1608)
R215	1-216-864-11	s	CONDUCTOR, CHIP (1608)
R216	1-216-864-11	s	CONDUCTOR, CHIP (1608)
R217	1-216-864-11	s	CONDUCTOR, CHIP (1608)
R218	1-211-977-11	s	RESISTOR,CHIP 22 1/10W (1608)
R219	1-218-863-11	s	RESISTOR,CHIP 4.7K 1/10W(1608)
R300	1-216-864-11	s	CONDUCTOR, CHIP (1608)
R301	1-216-864-11	s	CONDUCTOR, CHIP (1608)
R302	1-216-864-11	s	CONDUCTOR, CHIP (1608)
R303	1-218-863-11	s	RESISTOR,CHIP 4.7K 1/10W(1608)
R304	1-218-863-11	s	RESISTOR,CHIP 4.7K 1/10W(1608)
R305	1-218-863-11	s	RESISTOR,CHIP 4.7K 1/10W(1608)
R306	1-218-895-11	s	RESISTOR,CHIP 100K 1/10W(1608)
R307	1-218-863-11	s	RESISTOR,CHIP 4.7K 1/10W(1608)
R349	1-216-864-11	s	CONDUCTOR, CHIP (1608)
R351	1-211-977-11	s	RESISTOR,CHIP 22 1/10W (1608)
R352	1-211-977-11	s	RESISTOR,CHIP 22 1/10W (1608)
R353	1-218-863-11	s	RESISTOR,CHIP 4.7K 1/10W(1608)
R354	1-218-863-11	s	RESISTOR,CHIP 4.7K 1/10W(1608)
R355	1-218-863-11	s	RESISTOR,CHIP 4.7K 1/10W(1608)
R357	1-218-895-11	s	RESISTOR,CHIP 100K 1/10W(1608)
R358	1-218-895-11	s	RESISTOR,CHIP 100K 1/10W(1608)
R359	1-211-977-11	s	RESISTOR,CHIP 22 1/10W (1608)
R400	1-218-895-11	s	RESISTOR,CHIP 100K 1/10W(1608)
R402	1-211-985-11	s	RESISTOR,CHIP 47 1/10W (1608)
R403	1-211-985-11	s	RESISTOR,CHIP 47 1/10W (1608)
R428	1-218-823-11	s	RESISTOR,CHIP 100 1/10W (1608)
R429	1-218-823-11	s	RESISTOR,CHIP 100 1/10W (1608)
R430	1-218-823-11	s	RESISTOR,CHIP 100 1/10W (1608)
R431	1-218-823-11	s	RESISTOR,CHIP 100 1/10W (1608)
R432	1-211-977-11	s	RESISTOR,CHIP 22 1/10W (1608)
R433	1-211-977-11	s	RESISTOR,CHIP 22 1/10W (1608)
R434	1-211-977-11	s	RESISTOR,CHIP 22 1/10W (1608)
R435	1-216-864-11	s	CONDUCTOR, CHIP (1608)
R436	1-216-864-11	s	CONDUCTOR, CHIP (1608)
R437	1-211-985-11	s	RESISTOR,CHIP 47 1/10W (1608)
R440	1-218-895-11	s	RESISTOR,CHIP 100K 1/10W(1608)
R441	1-216-864-11	s	CONDUCTOR, CHIP (1608)
R502	1-216-864-11	s	CONDUCTOR, CHIP (1608)
R503	1-216-864-11	s	CONDUCTOR, CHIP (1608)
R605	1-216-864-11	s	CONDUCTOR, CHIP (1608)
R606	1-216-864-11	s	CONDUCTOR, CHIP (1608)

(DPR-229D BOARD [SUFFIX 14-])

Ref. No. or Q'ty	Part No.	SP	Description
R620	1-218-895-11	s	RESISTOR,CHIP 100K 1/10W(1608)
R651	1-216-864-11	s	CONDUCTOR, CHIP (1608)
R672	1-218-871-11	s	RESISTOR,CHIP 10K 1/10W (1608)
R673	1-218-856-11	s	RESISTOR,CHIP 2.4K 1/10W(1608)
R674	1-218-871-11	s	RESISTOR,CHIP 10K 1/10W (1608)
R676	1-211-899-11	s	RESISTOR,CHIP 0.22 1/4W (3225)
R715	1-216-864-11	s	CONDUCTOR, CHIP (1608)
R716	1-216-864-11	s	CONDUCTOR, CHIP (1608)
R717	1-216-864-11	s	CONDUCTOR, CHIP (1608)
R718	1-216-864-11	s	CONDUCTOR, CHIP (1608)
R719	1-216-864-11	s	CONDUCTOR, CHIP (1608)
R720	1-216-864-11	s	CONDUCTOR, CHIP (1608)
R722	1-216-864-11	s	CONDUCTOR, CHIP (1608)
R723	1-216-864-11	s	CONDUCTOR, CHIP (1608)
R724	1-216-864-11	s	CONDUCTOR, CHIP (1608)
R725	1-216-864-11	s	CONDUCTOR, CHIP (1608)
R726	1-216-864-11	s	CONDUCTOR, CHIP (1608)
R727	1-216-864-11	s	CONDUCTOR, CHIP (1608)
R728	1-216-864-11	s	CONDUCTOR, CHIP (1608)
R729	1-216-864-11	s	CONDUCTOR, CHIP (1608)
R738	1-218-847-11	s	RESISTOR, CHIP 1K 1/10W (1608)
R739	1-218-847-11	s	RESISTOR, CHIP 1K 1/10W (1608)
R740	1-218-847-11	s	RESISTOR, CHIP 1K 1/10W (1608)
R748	1-216-864-11	s	CONDUCTOR, CHIP (1608)
R749	1-216-864-11	s	CONDUCTOR, CHIP (1608)
R750	1-216-864-11	s	CONDUCTOR, CHIP (1608)
R751	1-216-864-11	s	CONDUCTOR, CHIP (1608)
R752	1-216-864-11	s	CONDUCTOR, CHIP (1608)
R753	1-216-864-11	s	CONDUCTOR, CHIP (1608)
R755	1-216-864-11	s	CONDUCTOR, CHIP (1608)
R756	1-216-864-11	s	CONDUCTOR, CHIP (1608)
R757	1-216-864-11	s	CONDUCTOR, CHIP (1608)
R758	1-216-864-11	s	CONDUCTOR, CHIP (1608)
R759	1-216-864-11	s	CONDUCTOR, CHIP (1608)
R760	1-216-864-11	s	CONDUCTOR, CHIP (1608)
R761	1-216-864-11	s	CONDUCTOR, CHIP (1608)
R762	1-216-864-11	s	CONDUCTOR, CHIP (1608)
R771	1-218-847-11	s	RESISTOR, CHIP 1K 1/10W (1608)
R772	1-218-847-11	s	RESISTOR, CHIP 1K 1/10W (1608)
R773	1-218-847-11	s	RESISTOR, CHIP 1K 1/10W (1608)
R796	1-216-864-11	s	CONDUCTOR, CHIP (1608)
R797	1-216-864-11	s	CONDUCTOR, CHIP (1608)
R811	1-216-864-11	s	CONDUCTOR, CHIP (1608)
R813	1-218-831-11	s	RESISTOR, CHIP 220 1/10W(1608)
R814	1-218-831-11	s	RESISTOR, CHIP 220 1/10W(1608)
R815	1-218-831-11	s	RESISTOR, CHIP 220 1/10W(1608)
R820	1-211-977-11	s	RESISTOR,CHIP 22 1/10W (1608)
R828	1-211-977-11	s	RESISTOR,CHIP 22 1/10W (1608)
R831	1-211-977-11	s	RESISTOR,CHIP 22 1/10W (1608)
R834	1-218-895-11	s	RESISTOR,CHIP 100K 1/10W(1608)
R835	1-218-895-11	s	RESISTOR,CHIP 100K 1/10W(1608)
R839	1-216-864-11	s	CONDUCTOR, CHIP (1608)
R841	1-211-977-11	s	RESISTOR,CHIP 22 1/10W (1608)
R851	1-216-864-11	s	CONDUCTOR, CHIP (1608)
R852	1-216-864-11	s	CONDUCTOR, CHIP (1608)
R854	1-211-977-11	s	RESISTOR,CHIP 22 1/10W (1608)
R855	1-211-977-11	s	RESISTOR,CHIP 22 1/10W (1608)
R856	1-211-977-11	s	RESISTOR,CHIP 22 1/10W (1608)
R857	1-211-977-11	s	RESISTOR,CHIP 22 1/10W (1608)

(DPR-229D BOARD [SUFFIX 14-])

Ref. No. or Q'ty	Part No.	SP	Description
R862	1-211-977-11	s	RESISTOR,CHIP 22 1/10W (1608)
R863	1-218-871-11	s	RESISTOR,CHIP 10K 1/10W (1608)
R864	1-218-847-11	s	RESISTOR, CHIP 1K 1/10W (1608)
R865	1-218-847-11	s	RESISTOR, CHIP 1K 1/10W (1608)
R866	1-218-835-11	s	RESISTOR,CHIP 330 1/10W (1608)
R867	1-218-835-11	s	RESISTOR,CHIP 330 1/10W (1608)
R869	1-218-895-11	s	RESISTOR,CHIP 100K 1/10W(1608)
R1037	1-216-864-11	s	CONDUCTOR, CHIP (1608)
R1038	1-216-864-11	s	CONDUCTOR, CHIP (1608)
R1039	1-216-864-11	s	CONDUCTOR, CHIP (1608)
R1040	1-216-864-11	s	CONDUCTOR, CHIP (1608)
R1052	1-218-895-11	s	RESISTOR,CHIP 100K 1/10W(1608)
R1053	1-218-895-11	s	RESISTOR,CHIP 100K 1/10W(1608)
R1054	1-216-864-11	s	CONDUCTOR, CHIP (1608)
RB100	1-233-810-21	s	RES, NETWORK 100K (3216)
RB101	1-233-810-21	s	RES, NETWORK 100K (3216)
RB102	1-239-409-11	s	RESISTOR NETWORK 47 (3216)
RB103	1-239-409-11	s	RESISTOR NETWORK 47 (3216)
RB104	1-233-810-21	s	RES, NETWORK 100K (3216)
RB106	1-234-397-11	s	NETWORK, RES (8 GANG) 100K
RB107	1-234-397-11	s	NETWORK, RES (8 GANG) 100K
RB108	1-233-575-11	s	RES, CHIP NETWORK 22
RB109	1-233-575-11	s	RES, CHIP NETWORK 22
RB110	1-233-575-11	s	RES, CHIP NETWORK 22
RB111	1-233-575-11	s	RES, CHIP NETWORK 22
RB112	1-233-575-11	s	RES, CHIP NETWORK 22
RB113	1-234-397-11	s	NETWORK, RES (8 GANG) 100K
RB114	1-233-576-11	s	RESISTOR,CHIP NETWORK 100
RB115	1-233-576-11	s	RESISTOR,CHIP NETWORK 100
RB116	1-233-810-21	s	RES, NETWORK 100K (3216)
RB117	1-234-397-11	s	NETWORK, RES (8 GANG) 100K
RB118	1-234-397-11	s	NETWORK, RES (8 GANG) 100K
RB119	1-234-397-11	s	NETWORK, RES (8 GANG) 100K
RB120	1-234-397-11	s	NETWORK, RES (8 GANG) 100K
RB121	1-233-576-11	s	RESISTOR,CHIP NETWORK 100
RB122	1-233-576-11	s	RESISTOR,CHIP NETWORK 100
RB123	1-234-397-11	s	NETWORK, RES (8 GANG) 100K
RB200	1-233-411-11	s	RESISTOR,CHIP NETWORK 220/3216
RB201	1-233-411-11	s	RESISTOR,CHIP NETWORK 220/3216
RB202	1-233-411-11	s	RESISTOR,CHIP NETWORK 220/3216
RB203	1-233-411-11	s	RESISTOR,CHIP NETWORK 220/3216
RB204	1-233-411-11	s	RESISTOR,CHIP NETWORK 220/3216
RB205	1-233-575-11	s	RES, CHIP NETWORK 22
RB206	1-233-575-11	s	RES, CHIP NETWORK 22
RB300	1-233-810-21	s	RES, NETWORK 100K (3216)
RB500	1-233-414-11	s	RESISTOR,CHIP NETWORK 4.7K
RB501	1-233-412-11	s	RESISTOR,CHIP NETWORK 1K
RB502	1-233-412-11	s	RESISTOR,CHIP NETWORK 1K
RB503	1-233-412-11	s	RESISTOR,CHIP NETWORK 1K
RB504	1-233-412-11	s	RESISTOR,CHIP NETWORK 1K
RB505	1-233-412-11	s	RESISTOR,CHIP NETWORK 1K
RB506	1-233-412-11	s	RESISTOR,CHIP NETWORK 1K
RB507	1-233-412-11	s	RESISTOR,CHIP NETWORK 1K
RB508	1-233-412-11	s	RESISTOR,CHIP NETWORK 1K
RB509	1-233-412-11	s	RESISTOR,CHIP NETWORK 1K
RB510	1-233-412-11	s	RESISTOR,CHIP NETWORK 1K
RB511	1-233-412-11	s	RESISTOR,CHIP NETWORK 1K
RB512	1-233-412-11	s	RESISTOR,CHIP NETWORK 1K
RB513	1-233-412-11	s	RESISTOR,CHIP NETWORK 1K

(DPR-229D BOARD [SUFFIX 14-])

Ref. No. or Q'ty	Part No.	SP	Description
RB514	1-233-412-11	s	RESISTOR,CHIP NETWORK 1K
RB515	1-233-412-11	s	RESISTOR,CHIP NETWORK 1K
RB516	1-234-523-21	s	RESISTOR,CHIP NETWORK
RB517	1-234-523-21	s	RESISTOR,CHIP NETWORK
RB518	1-234-523-21	s	RESISTOR,CHIP NETWORK
RB700	1-233-810-21	s	RES, NETWORK 100K (3216)
RB701	1-233-810-21	s	RES, NETWORK 100K (3216)
RB702	1-233-810-21	s	RES, NETWORK 100K (3216)
RB703	1-233-810-21	s	RES, NETWORK 100K (3216)
RB704	1-233-810-21	s	RES, NETWORK 100K (3216)
RB705	1-233-810-21	s	RES, NETWORK 100K (3216)
RB706	1-233-810-21	s	RES, NETWORK 100K (3216)
RB707	1-233-810-21	s	RES, NETWORK 100K (3216)
RB708	1-233-810-21	s	RES, NETWORK 100K (3216)
RB709	1-234-397-11	s	NETWORK, RES (8 GANG) 100K
RB710	1-234-397-11	s	NETWORK, RES (8 GANG) 100K
RB801	1-233-810-21	s	RES, NETWORK 100K (3216)
RB804	1-233-411-11	s	RESISTOR,CHIP NETWORK 220/3216
RB805	1-233-411-11	s	RESISTOR,CHIP NETWORK 220/3216
RB806	1-233-411-11	s	RESISTOR,CHIP NETWORK 220/3216
RB807	1-233-414-11	s	RESISTOR,CHIP NETWORK 4.7K
RB810	1-239-409-11	s	RESISTOR NETWORK 47 (3216)
RB811	1-239-409-11	s	RESISTOR NETWORK 47 (3216)
RB812	1-239-409-11	s	RESISTOR NETWORK 47 (3216)
RB813	1-233-810-21	s	RES, NETWORK 100K (3216)
RB814	1-233-810-21	s	RES, NETWORK 100K (3216)
RB815	1-233-810-21	s	RES, NETWORK 100K (3216)
RB816	1-233-810-21	s	RES, NETWORK 100K (3216)
RB817	1-233-414-11	s	RESISTOR,CHIP NETWORK 4.7K
RB818	1-236-908-11	s	RESISTOR,NETWORK 10K (3216)
RB819	1-233-810-21	s	RES, NETWORK 100K (3216)
X200	1-781-809-21	s	OSCILLATOR, CRYSTAL (SMD)

DPR-229DM BOARD [SUFFIX 14-]

[Lot No. 561 -] DVW-M2000/P

Ref. No. or Q'ty	Part No.	SP	Description
1pc	A-1103-101-A	s	MOUNTED CIRCUIT BOARD, DPR-229DM
1pc	3-179-084-11	s	LEVER (R), C BOARD
1pc	3-179-085-11	s	LEVER (L), C BOARD
C100	1-131-992-11	s	CAP, CERAMIC 100000PF F 1608
C101	1-131-992-11	s	CAP, CERAMIC 100000PF F 1608
C102	1-162-927-11	s	CAPACITOR,CERAMIC 100PF/50V CH
C103	1-126-394-11	s	CAPACITOR,ELECT 10MF/16V(CHIP)
C104	1-131-992-11	s	CAP, CERAMIC 100000PF F 1608
C105	1-131-992-11	s	CAP, CERAMIC 100000PF F 1608
C106	1-131-992-11	s	CAP, CERAMIC 100000PF F 1608
C107	1-131-992-11	s	CAP, CERAMIC 100000PF F 1608
C108	1-131-992-11	s	CAP, CERAMIC 100000PF F 1608
C109	1-131-992-11	s	CAP, CERAMIC 100000PF F 1608
C110	1-131-992-11	s	CAP, CERAMIC 100000PF F 1608
C111	1-131-992-11	s	CAP, CERAMIC 100000PF F 1608
C112	1-131-992-11	s	CAP, CERAMIC 100000PF F 1608
C113	1-131-992-11	s	CAP, CERAMIC 100000PF F 1608
C114	1-131-992-11	s	CAP, CERAMIC 100000PF F 1608
C115	1-131-992-11	s	CAP, CERAMIC 100000PF F 1608
C116	1-131-992-11	s	CAP, CERAMIC 100000PF F 1608
C117	1-131-992-11	s	CAP, CERAMIC 100000PF F 1608
C118	1-131-992-11	s	CAP, CERAMIC 100000PF F 1608
C119	1-131-992-11	s	CAP, CERAMIC 100000PF F 1608
C120	1-131-992-11	s	CAP, CERAMIC 100000PF F 1608
C121	1-131-992-11	s	CAP, CERAMIC 100000PF F 1608
C122	1-131-992-11	s	CAP, CERAMIC 100000PF F 1608
C123	1-131-992-11	s	CAP, CERAMIC 100000PF F 1608
C124	1-131-992-11	s	CAP, CERAMIC 100000PF F 1608
C125	1-131-992-11	s	CAP, CERAMIC 100000PF F 1608
C126	1-131-992-11	s	CAP, CERAMIC 100000PF F 1608
C127	1-131-992-11	s	CAP, CERAMIC 100000PF F 1608
C200	1-126-394-11	s	CAPACITOR,ELECT 10MF/16V(CHIP)
C201	1-131-992-11	s	CAP, CERAMIC 100000PF F 1608
C202	1-131-992-11	s	CAP, CERAMIC 100000PF F 1608
C203	1-131-992-11	s	CAP, CERAMIC 100000PF F 1608
C204	1-126-394-11	s	CAPACITOR,ELECT 10MF/16V(CHIP)
C205	1-131-992-11	s	CAP, CERAMIC 100000PF F 1608
C206	1-131-992-11	s	CAP, CERAMIC 100000PF F 1608
C207	1-126-394-11	s	CAPACITOR,ELECT 10MF/16V(CHIP)
C208	1-131-992-11	s	CAP, CERAMIC 100000PF F 1608
C209	1-131-992-11	s	CAP, CERAMIC 100000PF F 1608
C210	1-131-992-11	s	CAP, CERAMIC 100000PF F 1608
C211	1-127-692-91	s	CAP, CHIP CERAMIC 10MF B 3216
C212	1-127-692-91	s	CAP, CHIP CERAMIC 10MF B 3216
C213	1-131-992-11	s	CAP, CERAMIC 100000PF F 1608
C214	1-131-992-11	s	CAP, CERAMIC 100000PF F 1608
C215	1-131-992-11	s	CAP, CERAMIC 100000PF F 1608
C216	1-131-992-11	s	CAP, CERAMIC 100000PF F 1608
C217	1-131-992-11	s	CAP, CERAMIC 100000PF F 1608
C218	1-131-992-11	s	CAP, CERAMIC 100000PF F 1608
C219	1-131-992-11	s	CAP, CERAMIC 100000PF F 1608
C220	1-131-992-11	s	CAP, CERAMIC 100000PF F 1608
C221	1-131-992-11	s	CAP, CERAMIC 100000PF F 1608
C222	1-131-992-11	s	CAP, CERAMIC 100000PF F 1608
C223	1-131-992-11	s	CAP, CERAMIC 100000PF F 1608
C224	1-131-992-11	s	CAP, CERAMIC 100000PF F 1608
C225	1-131-992-11	s	CAP, CERAMIC 100000PF F 1608

(DPR-229DM BOARD [SUFFIX 14-])

Ref. No. or Q'ty	Part No.	SP	Description
C226	1-131-992-11	s	CAP, CERAMIC 100000PF F 1608
C227	1-131-992-11	s	CAP, CERAMIC 100000PF F 1608
C228	1-131-992-11	s	CAP, CERAMIC 100000PF F 1608
C234	1-131-992-11	s	CAP, CERAMIC 100000PF F 1608
C235	1-131-992-11	s	CAP, CERAMIC 100000PF F 1608
C300	1-131-992-11	s	CAP, CERAMIC 100000PF F 1608
C301	1-131-992-11	s	CAP, CERAMIC 100000PF F 1608
C302	1-131-992-11	s	CAP, CERAMIC 100000PF F 1608
C303	1-131-992-11	s	CAP, CERAMIC 100000PF F 1608
C304	1-126-394-11	s	CAPACITOR,ELECT 10MF/16V(CHIP)
C305	1-131-992-11	s	CAP, CERAMIC 100000PF F 1608
C306	1-131-992-11	s	CAP, CERAMIC 100000PF F 1608
C307	1-131-992-11	s	CAP, CERAMIC 100000PF F 1608
C308	1-131-992-11	s	CAP, CERAMIC 100000PF F 1608
C309	1-131-992-11	s	CAP, CERAMIC 100000PF F 1608
C310	1-131-992-11	s	CAP, CERAMIC 100000PF F 1608
C311	1-131-992-11	s	CAP, CERAMIC 100000PF F 1608
C312	1-131-992-11	s	CAP, CERAMIC 100000PF F 1608
C313	1-131-992-11	s	CAP, CERAMIC 100000PF F 1608
C314	1-126-394-11	s	CAPACITOR,ELECT 10MF/16V(CHIP)
C315	1-131-992-11	s	CAP, CERAMIC 100000PF F 1608
C316	1-131-992-11	s	CAP, CERAMIC 100000PF F 1608
C320	1-131-992-11	s	CAP, CERAMIC 100000PF F 1608
C321	1-131-992-11	s	CAP, CERAMIC 100000PF F 1608
C322	1-131-992-11	s	CAP, CERAMIC 100000PF F 1608
C323	1-131-992-11	s	CAP, CERAMIC 100000PF F 1608
C324	1-131-992-11	s	CAP, CERAMIC 100000PF F 1608
C325	1-131-992-11	s	CAP, CERAMIC 100000PF F 1608
C326	1-131-992-11	s	CAP, CERAMIC 100000PF F 1608
C327	1-131-992-11	s	CAP, CERAMIC 100000PF F 1608
C328	1-131-992-11	s	CAP, CERAMIC 100000PF F 1608
C329	1-131-992-11	s	CAP, CERAMIC 100000PF F 1608
C330	1-131-992-11	s	CAP, CERAMIC 100000PF F 1608
C331	1-126-394-11	s	CAPACITOR,ELECT 10MF/16V(CHIP)
C332	1-131-992-11	s	CAP, CERAMIC 100000PF F 1608
C333	1-131-992-11	s	CAP, CERAMIC 100000PF F 1608
C334	1-131-992-11	s	CAP, CERAMIC 100000PF F 1608
C335	1-131-992-11	s	CAP, CERAMIC 100000PF F 1608
C336	1-131-992-11	s	CAP, CERAMIC 100000PF F 1608
C337	1-131-992-11	s	CAP, CERAMIC 100000PF F 1608
C338	1-131-992-11	s	CAP, CERAMIC 100000PF F 1608
C339	1-131-992-11	s	CAP, CERAMIC 100000PF F 1608
C404	1-131-992-11	s	CAP, CERAMIC 100000PF F 1608
C412	1-126-394-11	s	CAPACITOR,ELECT 10MF/16V(CHIP)
C413	1-131-992-11	s	CAP, CERAMIC 100000PF F 1608
C418	1-126-394-11	s	CAPACITOR,ELECT 10MF/16V(CHIP)
C419	1-131-992-11	s	CAP, CERAMIC 100000PF F 1608
C420	1-131-992-11	s	CAP, CERAMIC 100000PF F 1608
C421	1-131-992-11	s	CAP, CERAMIC 100000PF F 1608
C422	1-131-992-11	s	CAP, CERAMIC 100000PF F 1608
C423	1-131-992-11	s	CAP, CERAMIC 100000PF F 1608
C424	1-131-992-11	s	CAP, CERAMIC 100000PF F 1608
C425	1-131-992-11	s	CAP, CERAMIC 100000PF F 1608
C426	1-131-992-11	s	CAP, CERAMIC 100000PF F 1608
C427	1-131-992-11	s	CAP, CERAMIC 100000PF F 1608
C428	1-131-992-11	s	CAP, CERAMIC 100000PF F 1608
C429	1-131-992-11	s	CAP, CERAMIC 100000PF F 1608
C430	1-131-992-11	s	CAP, CERAMIC 100000PF F 1608
C431	1-131-992-11	s	CAP, CERAMIC 100000PF F 1608

(DPR-229DM BOARD [SUFFIX 14-])

Ref. No. or Q'ty	Part No.	SP	Description
C432	1-131-992-11	s	CAP, CERAMIC 100000PF F 1608
C433	1-126-394-11	s	CAPACITOR,ELECT 10MF/16V(CHIP)
C440	1-131-992-11	s	CAP, CERAMIC 100000PF F 1608
C500	1-131-992-11	s	CAP, CERAMIC 100000PF F 1608
C501	1-131-992-11	s	CAP, CERAMIC 100000PF F 1608
C502	1-131-992-11	s	CAP, CERAMIC 100000PF F 1608
C503	1-131-992-11	s	CAP, CERAMIC 100000PF F 1608
C504	1-131-992-11	s	CAP, CERAMIC 100000PF F 1608
C505	1-131-992-11	s	CAP, CERAMIC 100000PF F 1608
C506	1-131-992-11	s	CAP, CERAMIC 100000PF F 1608
C507	1-131-992-11	s	CAP, CERAMIC 100000PF F 1608
C508	1-131-992-11	s	CAP, CERAMIC 100000PF F 1608
C509	1-131-992-11	s	CAP, CERAMIC 100000PF F 1608
C510	1-131-992-11	s	CAP, CERAMIC 100000PF F 1608
C511	1-131-992-11	s	CAP, CERAMIC 100000PF F 1608
C512	1-131-992-11	s	CAP, CERAMIC 100000PF F 1608
C513	1-131-992-11	s	CAP, CERAMIC 100000PF F 1608
C514	1-131-992-11	s	CAP, CERAMIC 100000PF F 1608
C515	1-131-992-11	s	CAP, CERAMIC 100000PF F 1608
C516	1-131-992-11	s	CAP, CERAMIC 100000PF F 1608
C517	1-131-992-11	s	CAP, CERAMIC 100000PF F 1608
C518	1-131-992-11	s	CAP, CERAMIC 100000PF F 1608
C519	1-131-992-11	s	CAP, CERAMIC 100000PF F 1608
C520	1-131-992-11	s	CAP, CERAMIC 100000PF F 1608
C521	1-131-992-11	s	CAP, CERAMIC 100000PF F 1608
C522	1-131-992-11	s	CAP, CERAMIC 100000PF F 1608
C523	1-126-394-11	s	CAPACITOR,ELECT 10MF/16V(CHIP)
C524	1-131-992-11	s	CAP, CERAMIC 100000PF F 1608
C525	1-131-992-11	s	CAP, CERAMIC 100000PF F 1608
C526	1-162-922-11	s	CAPACITOR,CERAMIC 39PF/50V CH
C527	1-131-992-11	s	CAP, CERAMIC 100000PF F 1608
C528	1-131-992-11	s	CAP, CERAMIC 100000PF F 1608
C529	1-131-992-11	s	CAP, CERAMIC 100000PF F 1608
C530	1-131-992-11	s	CAP, CERAMIC 100000PF F 1608
C531	1-131-992-11	s	CAP, CERAMIC 100000PF F 1608
C532	1-131-992-11	s	CAP, CERAMIC 100000PF F 1608
C533	1-131-992-11	s	CAP, CERAMIC 100000PF F 1608
C534	1-131-992-11	s	CAP, CERAMIC 100000PF F 1608
C535	1-131-992-11	s	CAP, CERAMIC 100000PF F 1608
C536	1-131-992-11	s	CAP, CERAMIC 100000PF F 1608
C537	1-131-992-11	s	CAP, CERAMIC 100000PF F 1608
C538	1-131-992-11	s	CAP, CERAMIC 100000PF F 1608
C539	1-131-992-11	s	CAP, CERAMIC 100000PF F 1608
C540	1-131-992-11	s	CAP, CERAMIC 100000PF F 1608
C541	1-131-992-11	s	CAP, CERAMIC 100000PF F 1608
C542	1-131-992-11	s	CAP, CERAMIC 100000PF F 1608
C543	1-131-992-11	s	CAP, CERAMIC 100000PF F 1608
C544	1-131-992-11	s	CAP, CERAMIC 100000PF F 1608
C545	1-131-992-11	s	CAP, CERAMIC 100000PF F 1608
C546	1-131-992-11	s	CAP, CERAMIC 100000PF F 1608
C547	1-131-992-11	s	CAP, CERAMIC 100000PF F 1608
C548	1-131-992-11	s	CAP, CERAMIC 100000PF F 1608
C549	1-131-992-11	s	CAP, CERAMIC 100000PF F 1608
C550	1-131-992-11	s	CAP, CERAMIC 100000PF F 1608
C551	1-131-992-11	s	CAP, CERAMIC 100000PF F 1608
C552	1-131-992-11	s	CAP, CERAMIC 100000PF F 1608
C606	1-131-992-11	s	CAP, CERAMIC 100000PF F 1608
C607	1-126-394-11	s	CAPACITOR,ELECT 10MF/16V(CHIP)
C608	1-131-992-11	s	CAP, CERAMIC 100000PF F 1608

(DPR-229DM BOARD [SUFFIX 14-])

Ref. No. or Q'ty	Part No.	SP	Description
C609	1-131-992-11	s	CAP, CERAMIC 100000PF F 1608
C650	1-162-970-11	s	CAPACITOR CERAMIC 0.01MF/25V B
C651	1-162-970-11	s	CAPACITOR CERAMIC 0.01MF/25V B
C652	1-131-992-11	s	CAP, CERAMIC 100000PF F 1608
C653	1-131-992-11	s	CAP, CERAMIC 100000PF F 1608
C654	1-126-394-11	s	CAPACITOR,ELECT 10MF/16V(CHIP)
C655	1-131-992-11	s	CAP, CERAMIC 100000PF F 1608
C656	1-131-992-11	s	CAP, CERAMIC 100000PF F 1608
C657	1-131-992-11	s	CAP, CERAMIC 100000PF F 1608
C658	1-131-992-11	s	CAP, CERAMIC 100000PF F 1608
C659	1-131-992-11	s	CAP, CERAMIC 100000PF F 1608
C660	1-131-992-11	s	CAP, CERAMIC 100000PF F 1608
C661	1-131-992-11	s	CAP, CERAMIC 100000PF F 1608
C662	1-131-992-11	s	CAP, CERAMIC 100000PF F 1608
C663	1-126-394-11	s	CAPACITOR,ELECT 10MF/16V(CHIP)
C664	1-165-870-21	s	CAPACITOR, ELECT 100MF(6.3X6)
C665	1-126-394-11	s	CAPACITOR,ELECT 10MF/16V(CHIP)
C666	1-131-992-11	s	CAP, CERAMIC 100000PF F 1608
C667	1-131-992-11	s	CAP, CERAMIC 100000PF F 1608
C668	1-131-992-11	s	CAP, CERAMIC 100000PF F 1608
C669	1-131-992-11	s	CAP, CERAMIC 100000PF F 1608
C670	1-131-992-11	s	CAP, CERAMIC 100000PF F 1608
C671	1-131-992-11	s	CAP, CERAMIC 100000PF F 1608
C672	1-131-992-11	s	CAP, CERAMIC 100000PF F 1608
C673	1-131-992-11	s	CAP, CERAMIC 100000PF F 1608
C674	1-131-992-11	s	CAP, CERAMIC 100000PF F 1608
C675	1-131-992-11	s	CAP, CERAMIC 100000PF F 1608
C676	1-131-992-11	s	CAP, CERAMIC 100000PF F 1608
C677	1-131-992-11	s	CAP, CERAMIC 100000PF F 1608
C678	1-131-992-11	s	CAP, CERAMIC 100000PF F 1608
C679	1-131-992-11	s	CAP, CERAMIC 100000PF F 1608
C680	1-131-992-11	s	CAP, CERAMIC 100000PF F 1608
C681	1-131-992-11	s	CAP, CERAMIC 100000PF F 1608
C682	1-131-992-11	s	CAP, CERAMIC 100000PF F 1608
C683	1-131-992-11	s	CAP, CERAMIC 100000PF F 1608
C684	1-131-992-11	s	CAP, CERAMIC 100000PF F 1608
C685	1-162-925-11	s	CAPACITOR,CERAMIC 68PF/50V CH
C686	1-165-872-21	s	CAPACITOR,SOLID ELECT 47MF
C687	1-126-394-11	s	CAPACITOR,ELECT 10MF/16V(CHIP)
C688	1-126-394-11	s	CAPACITOR,ELECT 10MF/16V(CHIP)
C689	1-131-992-11	s	CAP, CERAMIC 100000PF F 1608
C690	1-131-992-11	s	CAP, CERAMIC 100000PF F 1608
C700	1-131-992-11	s	CAP, CERAMIC 100000PF F 1608
C701	1-113-503-11	s	CAPACITOR,CERAMIC 3900PF CH
C702	1-162-968-11	s	CAPACITOR,CERAMIC 4700PF/50V B
C703	1-131-992-11	s	CAP, CERAMIC 100000PF F 1608
C704	1-131-992-11	s	CAP, CERAMIC 100000PF F 1608
C705	1-131-992-11	s	CAP, CERAMIC 100000PF F 1608
C706	1-131-992-11	s	CAP, CERAMIC 100000PF F 1608
C707	1-131-992-11	s	CAP, CERAMIC 100000PF F 1608
C708	1-131-992-11	s	CAP, CERAMIC 100000PF F 1608
C709	1-131-992-11	s	CAP, CERAMIC 100000PF F 1608
C710	1-131-992-11	s	CAP, CERAMIC 100000PF F 1608
C711	1-131-992-11	s	CAP, CERAMIC 100000PF F 1608
C712	1-131-992-11	s	CAP, CERAMIC 100000PF F 1608
C713	1-113-503-11	s	CAPACITOR,CERAMIC 3900PF CH
C714	1-162-968-11	s	CAPACITOR,CERAMIC 4700PF/50V B
C715	1-131-992-11	s	CAP, CERAMIC 100000PF F 1608
C716	1-131-992-11	s	CAP, CERAMIC 100000PF F 1608

(DPR-229DM BOARD [SUFFIX 14-])

Ref. No. or Q'ty	Part No.	SP	Description
C717	1-131-992-11	s	CAP, CERAMIC 100000PF F 1608
C718	1-131-992-11	s	CAP, CERAMIC 100000PF F 1608
C719	1-131-992-11	s	CAP, CERAMIC 100000PF F 1608
C720	1-131-992-11	s	CAP, CERAMIC 100000PF F 1608
C721	1-131-992-11	s	CAP, CERAMIC 100000PF F 1608
C722	1-131-992-11	s	CAP, CERAMIC 100000PF F 1608
C723	1-131-992-11	s	CAP, CERAMIC 100000PF F 1608
C724	1-131-992-11	s	CAP, CERAMIC 100000PF F 1608
C725	1-113-503-11	s	CAPACITOR,CERAMIC 3900PF CH
C726	1-162-968-11	s	CAPACITOR,CERAMIC 4700PF/50V B
C727	1-131-992-11	s	CAP, CERAMIC 100000PF F 1608
C728	1-131-992-11	s	CAP, CERAMIC 100000PF F 1608
C729	1-131-992-11	s	CAP, CERAMIC 100000PF F 1608
C730	1-131-992-11	s	CAP, CERAMIC 100000PF F 1608
C731	1-131-992-11	s	CAP, CERAMIC 100000PF F 1608
C732	1-131-992-11	s	CAP, CERAMIC 100000PF F 1608
C733	1-131-992-11	s	CAP, CERAMIC 100000PF F 1608
C734	1-131-992-11	s	CAP, CERAMIC 100000PF F 1608
C735	1-131-992-11	s	CAP, CERAMIC 100000PF F 1608
C736	1-131-992-11	s	CAP, CERAMIC 100000PF F 1608
C737	1-113-503-11	s	CAPACITOR,CERAMIC 3900PF CH
C738	1-162-968-11	s	CAPACITOR,CERAMIC 4700PF/50V B
C739	1-131-992-11	s	CAP, CERAMIC 100000PF F 1608
C740	1-131-992-11	s	CAP, CERAMIC 100000PF F 1608
C741	1-131-992-11	s	CAP, CERAMIC 100000PF F 1608
C742	1-131-992-11	s	CAP, CERAMIC 100000PF F 1608
C743	1-131-992-11	s	CAP, CERAMIC 100000PF F 1608
C744	1-131-992-11	s	CAP, CERAMIC 100000PF F 1608
C745	1-131-992-11	s	CAP, CERAMIC 100000PF F 1608
C746	1-131-992-11	s	CAP, CERAMIC 100000PF F 1608
C747	1-131-992-11	s	CAP, CERAMIC 100000PF F 1608
C748	1-131-992-11	s	CAP, CERAMIC 100000PF F 1608
C800	1-126-394-11	s	CAPACITOR,ELECT 10MF/16V(CHIP)
C801	1-131-992-11	s	CAP, CERAMIC 100000PF F 1608
C802	1-131-992-11	s	CAP, CERAMIC 100000PF F 1608
C803	1-131-992-11	s	CAP, CERAMIC 100000PF F 1608
C804	1-131-992-11	s	CAP, CERAMIC 100000PF F 1608
C810	1-131-992-11	s	CAP, CERAMIC 100000PF F 1608
C811	1-131-992-11	s	CAP, CERAMIC 100000PF F 1608
C812	1-128-590-11	s	CAPACITOR ELECT 100MF/6.3V(105
C813	1-128-590-11	s	CAPACITOR ELECT 100MF/6.3V(105
C814	1-131-992-11	s	CAP, CERAMIC 100000PF F 1608
C815	1-131-992-11	s	CAP, CERAMIC 100000PF F 1608
C816	1-131-992-11	s	CAP, CERAMIC 100000PF F 1608
C817	1-131-992-11	s	CAP, CERAMIC 100000PF F 1608
C818	1-131-992-11	s	CAP, CERAMIC 100000PF F 1608
C819	1-128-590-11	s	CAPACITOR ELECT 100MF/6.3V(105
C820	1-128-590-11	s	CAPACITOR ELECT 100MF/6.3V(105
C821	1-128-590-11	s	CAPACITOR ELECT 100MF/6.3V(105
C822	1-128-590-11	s	CAPACITOR ELECT 100MF/6.3V(105
C823	1-131-992-11	s	CAP, CERAMIC 100000PF F 1608
C827	1-131-992-11	s	CAP, CERAMIC 100000PF F 1608
C829	1-131-992-11	s	CAP, CERAMIC 100000PF F 1608
C831	1-131-992-11	s	CAP, CERAMIC 100000PF F 1608
C832	1-131-992-11	s	CAP, CERAMIC 100000PF F 1608
C833	1-131-992-11	s	CAP, CERAMIC 100000PF F 1608
C834	1-131-992-11	s	CAP, CERAMIC 100000PF F 1608
C835	1-131-992-11	s	CAP, CERAMIC 100000PF F 1608
C837	1-131-992-11	s	CAP, CERAMIC 100000PF F 1608

(DPR-229DM BOARD [SUFFIX 14-])

Ref. No. or Q'ty	Part No.	SP	Description
C838	1-131-992-11	s	CAP, CERAMIC 100000PF F 1608
C839	1-126-394-11	s	CAPACITOR,ELECT 10MF/16V(CHIP)
C842	1-131-992-11	s	CAP, CERAMIC 100000PF F 1608
C843	1-131-992-11	s	CAP, CERAMIC 100000PF F 1608
C844	1-131-992-11	s	CAP, CERAMIC 100000PF F 1608
C845	1-131-992-11	s	CAP, CERAMIC 100000PF F 1608
C846	1-131-992-11	s	CAP, CERAMIC 100000PF F 1608
C847	1-131-992-11	s	CAP, CERAMIC 100000PF F 1608
C848	1-126-394-11	s	CAPACITOR,ELECT 10MF/16V(CHIP)
C849	1-126-394-11	s	CAPACITOR,ELECT 10MF/16V(CHIP)
C850	1-131-992-11	s	CAP, CERAMIC 100000PF F 1608
C851	1-131-992-11	s	CAP, CERAMIC 100000PF F 1608
C852	1-131-992-11	s	CAP, CERAMIC 100000PF F 1608
C853	1-126-394-11	s	CAPACITOR,ELECT 10MF/16V(CHIP)
C862	1-131-992-11	s	CAP, CERAMIC 100000PF F 1608
C863	1-131-992-11	s	CAP, CERAMIC 100000PF F 1608
C864	1-131-992-11	s	CAP, CERAMIC 100000PF F 1608
C865	1-131-992-11	s	CAP, CERAMIC 100000PF F 1608
C867	1-127-861-11	s	CAP, CERAMIC 2.2MF B (3216)
C868	1-127-861-11	s	CAP, CERAMIC 2.2MF B (3216)
C869	1-131-992-11	s	CAP, CERAMIC 100000PF F 1608
C912	1-131-992-11	s	CAP, CERAMIC 100000PF F 1608
C913	1-126-394-11	s	CAPACITOR,ELECT 10MF/16V(CHIP)
C914	1-126-394-11	s	CAPACITOR,ELECT 10MF/16V(CHIP)
C915	1-131-992-11	s	CAP, CERAMIC 100000PF F 1608
C916	1-131-992-11	s	CAP, CERAMIC 100000PF F 1608
C917	1-131-992-11	s	CAP, CERAMIC 100000PF F 1608
C918	1-131-992-11	s	CAP, CERAMIC 100000PF F 1608
C919	1-131-992-11	s	CAP, CERAMIC 100000PF F 1608
C920	1-131-992-11	s	CAP, CERAMIC 100000PF F 1608
C921	1-131-992-11	s	CAP, CERAMIC 100000PF F 1608
C922	1-131-992-11	s	CAP, CERAMIC 100000PF F 1608
C923	1-131-992-11	s	CAP, CERAMIC 100000PF F 1608
C924	1-131-992-11	s	CAP, CERAMIC 100000PF F 1608
C925	1-131-992-11	s	CAP, CERAMIC 100000PF F 1608
C926	1-131-992-11	s	CAP, CERAMIC 100000PF F 1608
C927	1-131-992-11	s	CAP, CERAMIC 100000PF F 1608
C928	1-131-992-11	s	CAP, CERAMIC 100000PF F 1608
C929	1-131-992-11	s	CAP, CERAMIC 100000PF F 1608
C930	1-131-992-11	s	CAP, CERAMIC 100000PF F 1608
C931	1-131-992-11	s	CAP, CERAMIC 100000PF F 1608
C932	1-131-992-11	s	CAP, CERAMIC 100000PF F 1608
C933	1-131-992-11	s	CAP, CERAMIC 100000PF F 1608
C934	1-131-992-11	s	CAP, CERAMIC 100000PF F 1608
C935	1-131-992-11	s	CAP, CERAMIC 100000PF F 1608
C936	1-131-992-11	s	CAP, CERAMIC 100000PF F 1608
C937	1-131-992-11	s	CAP, CERAMIC 100000PF F 1608
C938	1-131-992-11	s	CAP, CERAMIC 100000PF F 1608
C939	1-131-992-11	s	CAP, CERAMIC 100000PF F 1608
CN16	1-580-789-91	s	PIN, CONNECTOR 6P
E100	1-535-877-22	s	CHIP,CHECKER (TEST POINT)
E200	1-535-877-22	s	CHIP,CHECKER (TEST POINT)
E300	1-535-877-22	s	CHIP,CHECKER (TEST POINT)
E400	1-535-877-22	s	CHIP,CHECKER (TEST POINT)
E401	1-535-877-22	s	CHIP,CHECKER (TEST POINT)
E500	1-535-877-22	s	CHIP,CHECKER (TEST POINT)
E600	1-535-877-22	s	CHIP,CHECKER (TEST POINT)
E700	1-535-877-22	s	CHIP,CHECKER (TEST POINT)

(DPR-229DM BOARD [SUFFIX 14-])

Ref. No. or Q'ty	Part No.	SP	Description
E800	1-535-877-22	s	CHIP,CHECKER (TEST POINT)
F800	⚠ 1-576-270-11	s	FUSE CHIP 4A/125V (6125)
F802	⚠ 1-576-270-11	s	FUSE CHIP 4A/125V (6125)
F803	⚠ 1-576-270-11	s	FUSE CHIP 4A/125V (6125)
FB200	1-469-094-21	s	FERRITE, EMI (SMD)
FL200	1-239-898-22	s	FILTER, EMI (SMD)
FL600	1-233-674-21	s	FILTER, EMI
FL601	1-233-674-21	s	FILTER, EMI
IC100	8-759-549-15	s	IC SN74LV245APWR
IC101	8-759-549-15	s	IC SN74LV245APWR
IC102	8-759-523-84	s	IC TC74VHC14FT (EL)
IC103	8-759-491-46	s	IC TC74VHCT04AFT (EL)
IC104	8-759-491-46	s	IC TC74VHCT04AFT (EL)
IC105	8-759-523-94	s	IC TC74VHC32FT(EL)
IC106	8-759-549-01	s	IC SN74LV125APWR
IC107	8-759-392-77	s	IC SN74LVC245APW (E20)
IC108	8-759-549-15	s	IC SN74LV245APWR
IC109	8-759-524-07	s	IC TC74VHC138FT(EL)
IC110	8-759-549-15	s	IC SN74LV245APWR
IC111	8-759-491-46	s	IC TC74VHCT04AFT (EL)
IC112	8-759-549-15	s	IC SN74LV245APWR
IC113	8-759-549-15	s	IC SN74LV245APWR
IC114	8-759-549-15	s	IC SN74LV245APWR
IC115	8-759-549-15	s	IC SN74LV245APWR
IC116	8-759-549-15	s	IC SN74LV245APWR
IC117	8-759-549-15	s	IC SN74LV245APWR
IC118	8-759-524-07	s	IC TC74VHC138FT(EL)
IC119	8-759-524-07	s	IC TC74VHC138FT(EL)
IC120	8-759-523-81	s	IC TC74VHC08FT(EL)
IC121	6-706-487-01	s	IC TC7SH08FU(T5RSOYJF)
IC122	8-759-523-92	s	IC TC74VHC21FT(EL)
IC123	8-759-549-15	s	IC SN74LV245APWR
IC124	8-752-392-03	s	IC CXD1095BR
IC125	6-706-487-01	s	IC TC7SH08FU(T5RSOYJF)
IC126	6-706-482-01	s	IC TC7SH00FU(T5RSOYJF)
IC200	8-759-475-55	s	IC TC74LCX574FT(EL)
IC201	8-759-475-55	s	IC TC74LCX574FT(EL)
IC202	8-759-475-55	s	IC TC74LCX574FT(EL)
IC203	8-759-669-41	s	IC SN74LVC125APWR-12
IC204	6-706-484-01	s	IC TC7SH04FU(T5RSOYJF)
IC205	8-759-669-41	s	IC SN74LVC125APWR-12
IC208	8-759-392-77	s	IC SN74LVC245APW (E20)
IC209	8-759-392-77	s	IC SN74LVC245APW (E20)
IC210	8-759-392-77	s	IC SN74LVC245APW (E20)
IC217	6-706-484-01	s	IC TC7SH04FU(T5RSOYJF)
IC301	8-759-449-09	s	IC CXD8945BR
IC302	8-759-524-10	s	IC TC74VHC157FT (EL)
IC303	8-759-524-10	s	IC TC74VHC157FT (EL)
IC307	6-700-497-01	s	IC MSM56V16800F-10TS-K
IC308	6-700-497-01	s	IC MSM56V16800F-10TS-K
IC309	6-700-497-01	s	IC MSM56V16800F-10TS-K
IC310	8-759-392-77	s	IC SN74LVC245APW (E20)
IC311	8-759-392-77	s	IC SN74LVC245APW (E20)
IC401	8-759-669-41	s	IC SN74LVC125APWR-12
IC407	8-759-656-31	o	IC CXD9094AR
IC413	8-759-639-86	s	IC SN65LVDS32DR
IC501	8-759-549-15	s	IC SN74LV245APWR

(DPR-229DM BOARD [SUFFIX 14-])

Ref. No. or Q'ty	Part No.	SP	Description
IC502	8-759-549-15	s	IC SN74LV245APWR
IC506	8-752-373-24	s	IC CXK48324R-1-T6
IC507	8-752-373-24	s	IC CXK48324R-1-T6
IC508	8-752-373-24	s	IC CXK48324R-1-T6
IC509	8-752-373-24	s	IC CXK48324R-1-T6
IC510	8-752-373-24	s	IC CXK48324R-1-T6
IC601	8-759-524-09	s	IC TC74VHC153FT (EL)
IC602	8-759-475-55	s	IC TC74LCX574FT(EL)
IC603	8-759-475-55	s	IC TC74LCX574FT(EL)
IC653	8-759-549-15	s	IC SN74LV245APWR
IC654	8-759-549-15	s	IC SN74LV245APWR
IC655	8-759-664-03	s	IC LP3964EMPX-ADJ
IC700	8-752-392-03	s	IC CXD1095BR
IC701	6-702-254-01	s	IC DSPB56362PV100-1J21D
IC702	8-759-543-83	s	IC KM416V1204CT-L6
IC703	8-759-543-83	s	IC KM416V1204CT-L6
IC704	6-702-254-01	s	IC DSPB56362PV100-1J21D
IC705	8-759-543-83	s	IC KM416V1204CT-L6
IC706	8-759-543-83	s	IC KM416V1204CT-L6
IC707	6-702-254-01	s	IC DSPB56362PV100-1J21D
IC708	8-759-543-83	s	IC KM416V1204CT-L6
IC709	8-759-543-83	s	IC KM416V1204CT-L6
IC710	6-702-254-01	s	IC DSPB56362PV100-1J21D
IC711	8-759-543-83	s	IC KM416V1204CT-L6
IC712	8-759-543-83	s	IC KM416V1204CT-L6
IC801	8-759-549-15	s	IC SN74LV245APWR
IC802	6-706-487-01	s	IC TC7SH08FU(T5RSOYJF)
IC803	8-759-491-46	s	IC TC74VHCT04AFT (EL)
IC804	8-759-669-41	s	IC SN74LVC125APWR-12
IC805	8-759-475-43	s	IC TC74LCX125FT(EL)
IC808	8-759-549-15	s	IC SN74LV245APWR
IC809	8-759-523-78	s	IC TC74VHC00FT(EL)
IC810	8-759-392-77	s	IC SN74LVC245APW (E20)
IC812	8-759-669-41	s	IC SN74LVC125APWR-12
IC813	8-759-669-41	s	IC SN74LVC125APWR-12
IC814	8-759-669-41	s	IC SN74LVC125APWR-12
IC815	8-759-475-43	s	IC TC74LCX125FT(EL)
IC817	8-759-549-01	s	IC SN74LV125APWR
IC818	8-759-549-15	s	IC SN74LV245APWR
IC819	8-759-524-10	s	IC TC74VHC157FT (EL)
IC822	8-759-549-01	s	IC SN74LV125APWR
IC823	8-759-549-15	s	IC SN74LV245APWR
IC824	8-759-549-15	s	IC SN74LV245APWR
IC825	8-759-549-15	s	IC SN74LV245APWR
IC826	8-759-549-01	s	IC SN74LV125APWR
IC827	6-704-723-01	s	IC XCS20XL-4VQG100C
IC829	8-759-524-10	s	IC TC74VHC157FT (EL)
IC831	8-759-524-27	s	IC TC74VHC244FT(EL)
IC832	6-706-484-01	s	IC TC7SH04FU(T5RSOYJF)
IC833	6-803-242-02	s	IC XC18V02-DPR229IMX-V4.00
IC834	6-803-243-03	s	IC XC18V02-DPR229SX-V3.01
IC902	6-802-024-01	s	IC CXD9012BR
IC903	8-759-549-15	s	IC SN74LV245APWR
IC904	8-759-549-15	s	IC SN74LV245APWR
L100	1-412-056-11	s	INDUCTOR 4.7UH (3225)
L101	1-412-056-11	s	INDUCTOR 4.7UH (3225)
L102	1-412-056-11	s	INDUCTOR 4.7UH (3225)
L103	1-412-056-11	s	INDUCTOR 4.7UH (3225)
L200	1-412-056-11	s	INDUCTOR 4.7UH (3225)

(DPR-229DM BOARD [SUFFIX 14-])

Ref. No. or Q'ty	Part No.	SP	Description
L201	1-412-056-11	s	INDUCTOR 4.7UH (3225)
L402	1-412-056-11	s	INDUCTOR 4.7UH (3225)
L600	1-412-056-11	s	INDUCTOR 4.7UH (3225)
L651	1-412-056-11	s	INDUCTOR 4.7UH (3225)
L800	1-419-630-11	s	COIL, CHOKE 4.7UH
L801	1-419-630-11	s	COIL, CHOKE 4.7UH
L802	1-419-630-11	s	COIL, CHOKE 4.7UH
L803	1-419-630-11	s	COIL, CHOKE 4.7UH
L804	1-412-056-11	s	INDUCTOR 4.7UH (3225)
L806	1-412-056-11	s	INDUCTOR 4.7UH (3225)
L807	1-412-056-11	s	INDUCTOR 4.7UH (3225)
L808	1-412-056-11	s	INDUCTOR 4.7UH (3225)
Q800	8-729-928-81	s	TRANSISTOR DTC144EE
Q801	8-729-045-53	s	TRANSISTOR SI4431DY-T1
Q802	8-729-140-63	s	TRANSISTOR 2SA1611-M5M6
R100	1-218-895-11	s	RESISTOR,CHIP 100K 1/10W(1608)
R101	1-218-895-11	s	RESISTOR,CHIP 100K 1/10W(1608)
R102	1-218-895-11	s	RESISTOR,CHIP 100K 1/10W(1608)
R103	1-218-895-11	s	RESISTOR,CHIP 100K 1/10W(1608)
R105	1-218-895-11	s	RESISTOR,CHIP 100K 1/10W(1608)
R106	1-211-985-11	s	RESISTOR,CHIP 47 1/10W (1608)
R107	1-211-985-11	s	RESISTOR,CHIP 47 1/10W (1608)
R108	1-211-985-11	s	RESISTOR,CHIP 47 1/10W (1608)
R109	1-211-985-11	s	RESISTOR,CHIP 47 1/10W (1608)
R110	1-218-895-11	s	RESISTOR,CHIP 100K 1/10W(1608)
R111	1-218-823-11	s	RESISTOR,CHIP 100 1/10W (1608)
R117	1-218-863-11	s	RESISTOR,CHIP 4.7K 1/10W(1608)
R118	1-218-863-11	s	RESISTOR,CHIP 4.7K 1/10W(1608)
R122	1-218-863-11	s	RESISTOR,CHIP 4.7K 1/10W(1608)
R124	1-218-863-11	s	RESISTOR,CHIP 4.7K 1/10W(1608)
R125	1-218-863-11	s	RESISTOR,CHIP 4.7K 1/10W(1608)
R126	1-218-863-11	s	RESISTOR,CHIP 4.7K 1/10W(1608)
R130	1-216-864-11	s	CONDUCTOR, CHIP (1608)
R131	1-216-864-11	s	CONDUCTOR, CHIP (1608)
R132	1-216-864-11	s	CONDUCTOR, CHIP (1608)
R133	1-216-864-11	s	CONDUCTOR, CHIP (1608)
R134	1-218-863-11	s	RESISTOR,CHIP 4.7K 1/10W(1608)
R136	1-211-977-11	s	RESISTOR,CHIP 22 1/10W (1608)
R141	1-216-864-11	s	CONDUCTOR, CHIP (1608)
R143	1-218-895-11	s	RESISTOR,CHIP 100K 1/10W(1608)
R144	1-211-977-11	s	RESISTOR,CHIP 22 1/10W (1608)
R200	1-218-831-11	s	RESISTOR, CHIP 220 1/10W(1608)
R202	1-216-864-11	s	CONDUCTOR, CHIP (1608)
R203	1-211-985-11	s	RESISTOR,CHIP 47 1/10W (1608)
R204	1-211-977-11	s	RESISTOR,CHIP 22 1/10W (1608)
R207	1-216-864-11	s	CONDUCTOR, CHIP (1608)
R208	1-218-871-11	s	RESISTOR,CHIP 10K 1/10W (1608)
R209	1-216-864-11	s	CONDUCTOR, CHIP (1608)
R210	1-216-864-11	s	CONDUCTOR, CHIP (1608)
R212	1-216-864-11	s	CONDUCTOR, CHIP (1608)
R213	1-216-864-11	s	CONDUCTOR, CHIP (1608)
R215	1-216-864-11	s	CONDUCTOR, CHIP (1608)
R216	1-216-864-11	s	CONDUCTOR, CHIP (1608)
R217	1-216-864-11	s	CONDUCTOR, CHIP (1608)
R218	1-211-977-11	s	RESISTOR,CHIP 22 1/10W (1608)
R219	1-218-863-11	s	RESISTOR,CHIP 4.7K 1/10W(1608)
R300	1-216-864-11	s	CONDUCTOR, CHIP (1608)
R301	1-216-864-11	s	CONDUCTOR, CHIP (1608)

(DPR-229DM BOARD [SUFFIX 14-])

Ref. No. or Q'ty	Part No.	SP	Description
R302	1-216-864-11	s	CONDUCTOR, CHIP (1608)
R303	1-218-863-11	s	RESISTOR,CHIP 4.7K 1/10W(1608)
R304	1-218-863-11	s	RESISTOR,CHIP 4.7K 1/10W(1608)
R305	1-218-863-11	s	RESISTOR,CHIP 4.7K 1/10W(1608)
R306	1-218-895-11	s	RESISTOR,CHIP 100K 1/10W(1608)
R307	1-218-863-11	s	RESISTOR,CHIP 4.7K 1/10W(1608)
R312	1-216-864-11	s	CONDUCTOR, CHIP (1608)
R313	1-216-864-11	s	CONDUCTOR, CHIP (1608)
R314	1-216-864-11	s	CONDUCTOR, CHIP (1608)
R315	1-216-864-11	s	CONDUCTOR, CHIP (1608)
R316	1-216-864-11	s	CONDUCTOR, CHIP (1608)
R317	1-218-895-11	s	RESISTOR,CHIP 100K 1/10W(1608)
R318	1-218-895-11	s	RESISTOR,CHIP 100K 1/10W(1608)
R319	1-218-895-11	s	RESISTOR,CHIP 100K 1/10W(1608)
R320	1-218-895-11	s	RESISTOR,CHIP 100K 1/10W(1608)
R321	1-218-895-11	s	RESISTOR,CHIP 100K 1/10W(1608)
R322	1-216-864-11	s	CONDUCTOR, CHIP (1608)
R323	1-216-864-11	s	CONDUCTOR, CHIP (1608)
R324	1-216-864-11	s	CONDUCTOR, CHIP (1608)
R325	1-216-864-11	s	CONDUCTOR, CHIP (1608)
R326	1-216-864-11	s	CONDUCTOR, CHIP (1608)
R327	1-216-864-11	s	CONDUCTOR, CHIP (1608)
R328	1-216-864-11	s	CONDUCTOR, CHIP (1608)
R329	1-216-864-11	s	CONDUCTOR, CHIP (1608)
R330	1-218-895-11	s	RESISTOR,CHIP 100K 1/10W(1608)
R331	1-216-864-11	s	CONDUCTOR, CHIP (1608)
R335	1-216-864-11	s	CONDUCTOR, CHIP (1608)
R338	1-218-863-11	s	RESISTOR,CHIP 4.7K 1/10W(1608)
R349	1-216-864-11	s	CONDUCTOR, CHIP (1608)
R351	1-211-977-11	s	RESISTOR,CHIP 22 1/10W (1608)
R352	1-211-977-11	s	RESISTOR,CHIP 22 1/10W (1608)
R353	1-218-863-11	s	RESISTOR,CHIP 4.7K 1/10W(1608)
R354	1-218-863-11	s	RESISTOR,CHIP 4.7K 1/10W(1608)
R355	1-218-863-11	s	RESISTOR,CHIP 4.7K 1/10W(1608)
R356	1-216-864-11	s	CONDUCTOR, CHIP (1608)
R359	1-211-977-11	s	RESISTOR,CHIP 22 1/10W (1608)
R400	1-218-895-11	s	RESISTOR,CHIP 100K 1/10W(1608)
R402	1-211-985-11	s	RESISTOR,CHIP 47 1/10W (1608)
R403	1-211-985-11	s	RESISTOR,CHIP 47 1/10W (1608)
R421	1-218-823-11	s	RESISTOR,CHIP 100 1/10W (1608)
R422	1-218-823-11	s	RESISTOR,CHIP 100 1/10W (1608)
R423	1-218-823-11	s	RESISTOR,CHIP 100 1/10W (1608)
R424	1-218-823-11	s	RESISTOR,CHIP 100 1/10W (1608)
R428	1-218-823-11	s	RESISTOR,CHIP 100 1/10W (1608)
R429	1-218-823-11	s	RESISTOR,CHIP 100 1/10W (1608)
R430	1-218-823-11	s	RESISTOR,CHIP 100 1/10W (1608)
R431	1-218-823-11	s	RESISTOR,CHIP 100 1/10W (1608)
R432	1-211-977-11	s	RESISTOR,CHIP 22 1/10W (1608)
R433	1-211-977-11	s	RESISTOR,CHIP 22 1/10W (1608)
R434	1-211-977-11	s	RESISTOR,CHIP 22 1/10W (1608)
R435	1-216-864-11	s	CONDUCTOR, CHIP (1608)
R436	1-216-864-11	s	CONDUCTOR, CHIP (1608)
R437	1-211-985-11	s	RESISTOR,CHIP 47 1/10W (1608)
R439	1-216-864-11	s	CONDUCTOR, CHIP (1608)
R440	1-218-895-11	s	RESISTOR,CHIP 100K 1/10W(1608)
R442	1-211-985-11	s	RESISTOR,CHIP 47 1/10W (1608)
R443	1-218-863-11	s	RESISTOR,CHIP 4.7K 1/10W(1608)
R502	1-216-864-11	s	CONDUCTOR, CHIP (1608)
R503	1-216-864-11	s	CONDUCTOR, CHIP (1608)

(DPR-229DM BOARD [SUFFIX 14-])

Ref. No. or Q'ty	Part No.	SP	Description
R605	1-216-864-11	s	CONDUCTOR, CHIP (1608)
R606	1-216-864-11	s	CONDUCTOR, CHIP (1608)
R607	1-216-864-11	s	CONDUCTOR, CHIP (1608)
R650	1-218-847-11	s	RESISTOR, CHIP 1K 1/10W (1608)
R652	1-216-864-11	s	CONDUCTOR, CHIP (1608)
R653	1-216-864-11	s	CONDUCTOR, CHIP (1608)
R654	1-216-864-11	s	CONDUCTOR, CHIP (1608)
R657	1-218-871-11	s	RESISTOR,CHIP 10K 1/10W (1608)
R658	1-216-864-11	s	CONDUCTOR, CHIP (1608)
R659	1-216-864-11	s	CONDUCTOR, CHIP (1608)
R660	1-216-864-11	s	CONDUCTOR, CHIP (1608)
R661	1-218-903-11	s	RESISTOR,CHIP 220K 1/10W(1608)
R662	1-218-878-11	s	RESISTOR,CHIP 20K 1/10W (1608)
R663	1-218-878-11	s	RESISTOR,CHIP 20K 1/10W (1608)
R666	1-211-990-11	s	RESISTOR,CHIP 75 1/10W (1608)
R668	1-211-990-11	s	RESISTOR,CHIP 75 1/10W (1608)
R670	1-218-903-11	s	RESISTOR,CHIP 220K 1/10W(1608)
R671	1-218-903-11	s	RESISTOR,CHIP 220K 1/10W(1608)
R672	1-218-871-11	s	RESISTOR,CHIP 10K 1/10W (1608)
R673	1-218-856-11	s	RESISTOR,CHIP 2.4K 1/10W(1608)
R674	1-218-871-11	s	RESISTOR,CHIP 10K 1/10W (1608)
R676	1-211-899-11	s	RESISTOR,CHIP 0.22 1/4W (3225)
R715	1-216-864-11	s	CONDUCTOR, CHIP (1608)
R716	1-216-864-11	s	CONDUCTOR, CHIP (1608)
R717	1-216-864-11	s	CONDUCTOR, CHIP (1608)
R718	1-216-864-11	s	CONDUCTOR, CHIP (1608)
R719	1-216-864-11	s	CONDUCTOR, CHIP (1608)
R720	1-216-864-11	s	CONDUCTOR, CHIP (1608)
R722	1-216-864-11	s	CONDUCTOR, CHIP (1608)
R723	1-216-864-11	s	CONDUCTOR, CHIP (1608)
R724	1-216-864-11	s	CONDUCTOR, CHIP (1608)
R725	1-216-864-11	s	CONDUCTOR, CHIP (1608)
R726	1-216-864-11	s	CONDUCTOR, CHIP (1608)
R727	1-216-864-11	s	CONDUCTOR, CHIP (1608)
R728	1-216-864-11	s	CONDUCTOR, CHIP (1608)
R729	1-216-864-11	s	CONDUCTOR, CHIP (1608)
R738	1-218-847-11	s	RESISTOR, CHIP 1K 1/10W (1608)
R739	1-218-847-11	s	RESISTOR, CHIP 1K 1/10W (1608)
R740	1-218-847-11	s	RESISTOR, CHIP 1K 1/10W (1608)
R748	1-216-864-11	s	CONDUCTOR, CHIP (1608)
R749	1-216-864-11	s	CONDUCTOR, CHIP (1608)
R750	1-216-864-11	s	CONDUCTOR, CHIP (1608)
R751	1-216-864-11	s	CONDUCTOR, CHIP (1608)
R752	1-216-864-11	s	CONDUCTOR, CHIP (1608)
R753	1-216-864-11	s	CONDUCTOR, CHIP (1608)
R755	1-216-864-11	s	CONDUCTOR, CHIP (1608)
R756	1-216-864-11	s	CONDUCTOR, CHIP (1608)
R757	1-216-864-11	s	CONDUCTOR, CHIP (1608)
R758	1-216-864-11	s	CONDUCTOR, CHIP (1608)
R759	1-216-864-11	s	CONDUCTOR, CHIP (1608)
R760	1-216-864-11	s	CONDUCTOR, CHIP (1608)
R761	1-216-864-11	s	CONDUCTOR, CHIP (1608)
R762	1-216-864-11	s	CONDUCTOR, CHIP (1608)
R771	1-218-847-11	s	RESISTOR, CHIP 1K 1/10W (1608)
R772	1-218-847-11	s	RESISTOR, CHIP 1K 1/10W (1608)
R773	1-218-847-11	s	RESISTOR, CHIP 1K 1/10W (1608)
R781	1-216-864-11	s	CONDUCTOR, CHIP (1608)
R782	1-216-864-11	s	CONDUCTOR, CHIP (1608)
R783	1-216-864-11	s	CONDUCTOR, CHIP (1608)

(DPR-229DM BOARD [SUFFIX 14-])

Ref. No. or Q'ty	Part No.	SP	Description
R784	1-216-864-11	s	CONDUCTOR, CHIP (1608)
R785	1-216-864-11	s	CONDUCTOR, CHIP (1608)
R786	1-216-864-11	s	CONDUCTOR, CHIP (1608)
R788	1-216-864-11	s	CONDUCTOR, CHIP (1608)
R789	1-216-864-11	s	CONDUCTOR, CHIP (1608)
R790	1-216-864-11	s	CONDUCTOR, CHIP (1608)
R791	1-216-864-11	s	CONDUCTOR, CHIP (1608)
R792	1-216-864-11	s	CONDUCTOR, CHIP (1608)
R793	1-216-864-11	s	CONDUCTOR, CHIP (1608)
R794	1-216-864-11	s	CONDUCTOR, CHIP (1608)
R795	1-216-864-11	s	CONDUCTOR, CHIP (1608)
R801	1-216-864-11	s	CONDUCTOR, CHIP (1608)
R802	1-216-864-11	s	CONDUCTOR, CHIP (1608)
R803	1-218-863-11	s	RESISTOR,CHIP 4.7K 1/10W(1608)
R805	1-218-863-11	s	RESISTOR,CHIP 4.7K 1/10W(1608)
R811	1-216-864-11	s	CONDUCTOR, CHIP (1608)
R813	1-218-831-11	s	RESISTOR, CHIP 220 1/10W(1608)
R814	1-218-831-11	s	RESISTOR, CHIP 220 1/10W(1608)
R815	1-218-831-11	s	RESISTOR, CHIP 220 1/10W(1608)
R820	1-211-977-11	s	RESISTOR,CHIP 22 1/10W (1608)
R822	1-211-977-11	s	RESISTOR,CHIP 22 1/10W (1608)
R823	1-211-977-11	s	RESISTOR,CHIP 22 1/10W (1608)
R824	1-211-977-11	s	RESISTOR,CHIP 22 1/10W (1608)
R825	1-211-977-11	s	RESISTOR,CHIP 22 1/10W (1608)
R826	1-211-977-11	s	RESISTOR,CHIP 22 1/10W (1608)
R827	1-211-977-11	s	RESISTOR,CHIP 22 1/10W (1608)
R828	1-211-977-11	s	RESISTOR,CHIP 22 1/10W (1608)
R831	1-211-977-11	s	RESISTOR,CHIP 22 1/10W (1608)
R834	1-218-895-11	s	RESISTOR,CHIP 100K 1/10W(1608)
R835	1-218-895-11	s	RESISTOR,CHIP 100K 1/10W(1608)
R839	1-216-864-11	s	CONDUCTOR, CHIP (1608)
R841	1-211-977-11	s	RESISTOR,CHIP 22 1/10W (1608)
R854	1-211-977-11	s	RESISTOR,CHIP 22 1/10W (1608)
R855	1-211-977-11	s	RESISTOR,CHIP 22 1/10W (1608)
R856	1-211-977-11	s	RESISTOR,CHIP 22 1/10W (1608)
R857	1-211-977-11	s	RESISTOR,CHIP 22 1/10W (1608)
R858	1-211-977-11	s	RESISTOR,CHIP 22 1/10W (1608)
R859	1-211-977-11	s	RESISTOR,CHIP 22 1/10W (1608)
R860	1-211-977-11	s	RESISTOR,CHIP 22 1/10W (1608)
R861	1-211-977-11	s	RESISTOR,CHIP 22 1/10W (1608)
R862	1-211-977-11	s	RESISTOR,CHIP 22 1/10W (1608)
R863	1-218-871-11	s	RESISTOR,CHIP 10K 1/10W (1608)
R864	1-218-847-11	s	RESISTOR, CHIP 1K 1/10W (1608)
R865	1-218-847-11	s	RESISTOR, CHIP 1K 1/10W (1608)
R866	1-218-835-11	s	RESISTOR,CHIP 330 1/10W (1608)
R867	1-218-835-11	s	RESISTOR,CHIP 330 1/10W (1608)
R903	1-218-849-11	s	RESISTOR,CHIP 1.2K 1/10W(1608)
R904	1-218-847-11	s	RESISTOR, CHIP 1K 1/10W (1608)
R905	1-216-864-11	s	CONDUCTOR, CHIP (1608)
R906	1-216-864-11	s	CONDUCTOR, CHIP (1608)
R907	1-216-864-11	s	CONDUCTOR, CHIP (1608)
R908	1-216-864-11	s	CONDUCTOR, CHIP (1608)
R909	1-218-895-11	s	RESISTOR,CHIP 100K 1/10W(1608)
R911	1-218-871-11	s	RESISTOR,CHIP 10K 1/10W (1608)
R912	1-218-835-11	s	RESISTOR,CHIP 330 1/10W (1608)
R913	1-216-864-11	s	CONDUCTOR, CHIP (1608)
R914	1-216-864-11	s	CONDUCTOR, CHIP (1608)
R915	1-218-895-11	s	RESISTOR,CHIP 100K 1/10W(1608)
R1004	1-218-847-11	s	RESISTOR, CHIP 1K 1/10W (1608)

(DPR-229DM BOARD [SUFFIX 14-])

Ref. No. or Q'ty	Part No.	SP	Description
R1005	1-218-847-11	s	RESISTOR, CHIP 1K 1/10W (1608)
R1006	1-218-847-11	s	RESISTOR, CHIP 1K 1/10W (1608)
R1014	1-216-864-11	s	CONDUCTOR, CHIP (1608)
R1015	1-216-864-11	s	CONDUCTOR, CHIP (1608)
R1016	1-216-864-11	s	CONDUCTOR, CHIP (1608)
R1017	1-216-864-11	s	CONDUCTOR, CHIP (1608)
R1018	1-216-864-11	s	CONDUCTOR, CHIP (1608)
R1019	1-216-864-11	s	CONDUCTOR, CHIP (1608)
R1021	1-216-864-11	s	CONDUCTOR, CHIP (1608)
R1022	1-216-864-11	s	CONDUCTOR, CHIP (1608)
R1023	1-216-864-11	s	CONDUCTOR, CHIP (1608)
R1024	1-216-864-11	s	CONDUCTOR, CHIP (1608)
R1025	1-216-864-11	s	CONDUCTOR, CHIP (1608)
R1026	1-216-864-11	s	CONDUCTOR, CHIP (1608)
R1027	1-216-864-11	s	CONDUCTOR, CHIP (1608)
R1028	1-216-864-11	s	CONDUCTOR, CHIP (1608)
R1037	1-216-864-11	s	CONDUCTOR, CHIP (1608)
R1038	1-216-864-11	s	CONDUCTOR, CHIP (1608)
R1039	1-216-864-11	s	CONDUCTOR, CHIP (1608)
R1040	1-216-864-11	s	CONDUCTOR, CHIP (1608)
R1042	1-218-847-11	s	RESISTOR, CHIP 1K 1/10W (1608)
R1043	1-218-847-11	s	RESISTOR, CHIP 1K 1/10W (1608)
R1044	1-218-847-11	s	RESISTOR, CHIP 1K 1/10W (1608)
R1052	1-218-895-11	s	RESISTOR,CHIP 100K 1/10W(1608)
R1053	1-218-895-11	s	RESISTOR,CHIP 100K 1/10W(1608)
R1054	1-216-864-11	s	CONDUCTOR, CHIP (1608)
R1055	1-216-864-11	s	CONDUCTOR, CHIP (1608)
R1056	1-216-864-11	s	CONDUCTOR, CHIP (1608)
RB100	1-233-810-21	s	RES, NETWORK 100K (3216)
RB101	1-233-810-21	s	RES, NETWORK 100K (3216)
RB102	1-239-409-11	s	RESISTOR NETWORK 47 (3216)
RB103	1-239-409-11	s	RESISTOR NETWORK 47 (3216)
RB104	1-233-810-21	s	RES, NETWORK 100K (3216)
RB106	1-234-397-11	s	NETWORK, RES (8 GANG) 100K
RB107	1-234-397-11	s	NETWORK, RES (8 GANG) 100K
RB108	1-233-575-11	s	RES, CHIP NETWORK 22
RB109	1-233-575-11	s	RES, CHIP NETWORK 22
RB110	1-233-575-11	s	RES, CHIP NETWORK 22
RB111	1-233-575-11	s	RES, CHIP NETWORK 22
RB112	1-233-575-11	s	RES, CHIP NETWORK 22
RB113	1-234-397-11	s	NETWORK, RES (8 GANG) 100K
RB114	1-233-576-11	s	RESISTOR,CHIP NETWORK 100
RB115	1-233-576-11	s	RESISTOR,CHIP NETWORK 100
RB116	1-233-810-21	s	RES, NETWORK 100K (3216)
RB117	1-234-397-11	s	NETWORK, RES (8 GANG) 100K
RB118	1-234-397-11	s	NETWORK, RES (8 GANG) 100K
RB119	1-234-397-11	s	NETWORK, RES (8 GANG) 100K
RB120	1-234-397-11	s	NETWORK, RES (8 GANG) 100K
RB121	1-233-576-11	s	RESISTOR,CHIP NETWORK 100
RB122	1-233-576-11	s	RESISTOR,CHIP NETWORK 100
RB123	1-234-397-11	s	NETWORK, RES (8 GANG) 100K
RB200	1-233-411-11	s	RESISTOR,CHIP NETWORK 220/3216
RB201	1-233-411-11	s	RESISTOR,CHIP NETWORK 220/3216
RB202	1-233-411-11	s	RESISTOR,CHIP NETWORK 220/3216
RB203	1-233-411-11	s	RESISTOR,CHIP NETWORK 220/3216
RB204	1-233-411-11	s	RESISTOR,CHIP NETWORK 220/3216
RB205	1-233-575-11	s	RES, CHIP NETWORK 22
RB206	1-233-575-11	s	RES, CHIP NETWORK 22

(DPR-229DM BOARD [SUFFIX 14-])

Ref. No. or Q'ty	Part No.	SP	Description
RB500	1-233-414-11	s	RESISTOR,CHIP NETWORK 4.7K
RB501	1-233-412-11	s	RESISTOR,CHIP NETWORK 1K
RB502	1-233-412-11	s	RESISTOR,CHIP NETWORK 1K
RB503	1-233-412-11	s	RESISTOR,CHIP NETWORK 1K
RB504	1-233-412-11	s	RESISTOR,CHIP NETWORK 1K
RB505	1-233-412-11	s	RESISTOR,CHIP NETWORK 1K
RB506	1-233-412-11	s	RESISTOR,CHIP NETWORK 1K
RB507	1-233-412-11	s	RESISTOR,CHIP NETWORK 1K
RB508	1-233-412-11	s	RESISTOR,CHIP NETWORK 1K
RB509	1-233-412-11	s	RESISTOR,CHIP NETWORK 1K
RB510	1-233-412-11	s	RESISTOR,CHIP NETWORK 1K
RB511	1-233-412-11	s	RESISTOR,CHIP NETWORK 1K
RB512	1-233-412-11	s	RESISTOR,CHIP NETWORK 1K
RB513	1-233-412-11	s	RESISTOR,CHIP NETWORK 1K
RB514	1-233-412-11	s	RESISTOR,CHIP NETWORK 1K
RB515	1-233-412-11	s	RESISTOR,CHIP NETWORK 1K
RB516	1-234-523-21	s	RESISTOR,CHIP NETWORK
RB517	1-234-523-21	s	RESISTOR,CHIP NETWORK
RB518	1-234-523-21	s	RESISTOR,CHIP NETWORK
RB600	1-234-523-21	s	RESISTOR,CHIP NETWORK
RB601	1-234-523-21	s	RESISTOR,CHIP NETWORK
RB602	1-234-523-21	s	RESISTOR,CHIP NETWORK
RB700	1-233-810-21	s	RES, NETWORK 100K (3216)
RB701	1-233-810-21	s	RES, NETWORK 100K (3216)
RB702	1-233-810-21	s	RES, NETWORK 100K (3216)
RB703	1-233-810-21	s	RES, NETWORK 100K (3216)
RB704	1-233-810-21	s	RES, NETWORK 100K (3216)
RB705	1-233-810-21	s	RES, NETWORK 100K (3216)
RB706	1-233-810-21	s	RES, NETWORK 100K (3216)
RB707	1-233-810-21	s	RES, NETWORK 100K (3216)
RB708	1-233-810-21	s	RES, NETWORK 100K (3216)
RB709	1-234-397-11	s	NETWORK, RES (8 GANG) 100K
RB710	1-234-397-11	s	NETWORK, RES (8 GANG) 100K
RB711	1-234-397-11	s	NETWORK, RES (8 GANG) 100K
RB712	1-234-397-11	s	NETWORK, RES (8 GANG) 100K
RB801	1-233-810-21	s	RES, NETWORK 100K (3216)
RB804	1-233-411-11	s	RESISTOR,CHIP NETWORK 220/3216
RB805	1-233-411-11	s	RESISTOR,CHIP NETWORK 220/3216
RB806	1-233-411-11	s	RESISTOR,CHIP NETWORK 220/3216
RB807	1-233-414-11	s	RESISTOR,CHIP NETWORK 4.7K
RB808	1-239-409-11	s	RESISTOR NETWORK 47 (3216)
RB809	1-239-409-11	s	RESISTOR NETWORK 47 (3216)
RB810	1-239-409-11	s	RESISTOR NETWORK 47 (3216)
RB811	1-239-409-11	s	RESISTOR NETWORK 47 (3216)
RB812	1-239-409-11	s	RESISTOR NETWORK 47 (3216)
RB813	1-233-810-21	s	RES, NETWORK 100K (3216)
RB814	1-233-810-21	s	RES, NETWORK 100K (3216)
RB815	1-233-810-21	s	RES, NETWORK 100K (3216)
RB816	1-233-810-21	s	RES, NETWORK 100K (3216)
RB817	1-233-414-11	s	RESISTOR,CHIP NETWORK 4.7K
RB818	1-236-908-11	s	RESISTOR,NETWORK 10K (3216)
X200	1-781-809-21	s	OSCILLATOR, CRYSTAL (SMD)

DPR-229H BOARD [SUFFIX 11-13]

[Lot No. 352 - 554] HDW-2000, A2100

*1: [Lot No. 352 - 554] [Board No. suffix 11 - 13]
*2: [Lot No. 421 - 554] [Board No. suffix 12, 13]
*3: [Lot No. 461 - 554] [Board No. suffix 13]

Ref. No. or Q'ty	Part No.	SP	Description
1pc	A-8346-099-A	s	MOUNTED CIRCUIT BOARD, DPR-229H
4pcs	3-191-747-01	o	SUPPORT (M3), HEXAGON
8pcs	7-682-545-04	s	SCREW +B3X4
1pc	3-179-084-11	s	LEVER (R), C BOARD
1pc	3-179-085-11	s	LEVER (L), C BOARD
C100	1-131-992-11	s	CAP, CERAMIC 100000PF F 1608
C101	1-131-992-11	s	CAP, CERAMIC 100000PF F 1608
C102	1-162-927-11	s	CAPACITOR,CERAMIC 100PF/50V CH
C103	1-126-394-11	s	CAPACITOR,ELECT 10MF/16V(CHIP)
C104	1-131-992-11	s	CAP, CERAMIC 100000PF F 1608
C105	1-131-992-11	s	CAP, CERAMIC 100000PF F 1608
C106	1-131-992-11	s	CAP, CERAMIC 100000PF F 1608
C107	1-131-992-11	s	CAP, CERAMIC 100000PF F 1608
C108	1-131-992-11	s	CAP, CERAMIC 100000PF F 1608
C109	1-131-992-11	s	CAP, CERAMIC 100000PF F 1608
C110	1-131-992-11	s	CAP, CERAMIC 100000PF F 1608
C111	1-131-992-11	s	CAP, CERAMIC 100000PF F 1608
C112	1-131-992-11	s	CAP, CERAMIC 100000PF F 1608
C113	1-131-992-11	s	CAP, CERAMIC 100000PF F 1608
C114	1-131-992-11	s	CAP, CERAMIC 100000PF F 1608
C115	1-131-992-11	s	CAP, CERAMIC 100000PF F 1608
C116	1-131-992-11	s	CAP, CERAMIC 100000PF F 1608
C117	1-131-992-11	s	CAP, CERAMIC 100000PF F 1608
C118	1-131-992-11	s	CAP, CERAMIC 100000PF F 1608
C119	1-131-992-11	s	CAP, CERAMIC 100000PF F 1608
C120	1-131-992-11	s	CAP, CERAMIC 100000PF F 1608
C121	1-131-992-11	s	CAP, CERAMIC 100000PF F 1608
C122	1-131-992-11	s	CAP, CERAMIC 100000PF F 1608
C123	1-131-992-11	s	CAP, CERAMIC 100000PF F 1608
C124	1-131-992-11	s	CAP, CERAMIC 100000PF F 1608
C125	1-131-992-11	s	CAP, CERAMIC 100000PF F 1608
C126	1-131-992-11	s	CAP, CERAMIC 100000PF F 1608
C127	1-131-992-11	s	CAP, CERAMIC 100000PF F 1608
C200	1-126-394-11	s	CAPACITOR,ELECT 10MF/16V(CHIP)
C201	1-131-992-11	s	CAP, CERAMIC 100000PF F 1608
C202	1-131-992-11	s	CAP, CERAMIC 100000PF F 1608
C203	1-131-992-11	s	CAP, CERAMIC 100000PF F 1608
C204	1-126-394-11	s	CAPACITOR,ELECT 10MF/16V(CHIP)
C205	1-131-992-11	s	CAP, CERAMIC 100000PF F 1608
C206	1-131-992-11	s	CAP, CERAMIC 100000PF F 1608
C207	1-126-394-11	s	CAPACITOR,ELECT 10MF/16V(CHIP)
C208	1-131-992-11	s	CAP, CERAMIC 100000PF F 1608
C209	1-131-992-11	s	CAP, CERAMIC 100000PF F 1608
C210	1-131-992-11	s	CAP, CERAMIC 100000PF F 1608
C211	*2 1-127-692-11	s	CAP, CHIP CERAMIC 10MF B 3216
	*1 1-104-851-11	s	CAPACITOR,TANTALUM 10MF/10V
C212	*2 1-127-692-11	s	CAP, CHIP CERAMIC 10MF B 3216
	*1 1-104-851-11	s	CAPACITOR,TANTALUM 10MF/10V
C213	1-131-992-11	s	CAP, CERAMIC 100000PF F 1608
C214	1-131-992-11	s	CAP, CERAMIC 100000PF F 1608
C215	1-131-992-11	s	CAP, CERAMIC 100000PF F 1608
C216	1-131-992-11	s	CAP, CERAMIC 100000PF F 1608
C217	1-131-992-11	s	CAP, CERAMIC 100000PF F 1608
C218	1-131-992-11	s	CAP, CERAMIC 100000PF F 1608

(DPR-229H BOARD [SUFFIX 11-13])

Ref. No. or Q'ty	Part No.	SP	Description
C219	1-131-992-11	s	CAP, CERAMIC 100000PF F 1608
C220	1-131-992-11	s	CAP, CERAMIC 100000PF F 1608
C221	1-131-992-11	s	CAP, CERAMIC 100000PF F 1608
C222	1-131-992-11	s	CAP, CERAMIC 100000PF F 1608
C223	1-131-992-11	s	CAP, CERAMIC 100000PF F 1608
C224	1-131-992-11	s	CAP, CERAMIC 100000PF F 1608
C225	1-131-992-11	s	CAP, CERAMIC 100000PF F 1608
C226	1-131-992-11	s	CAP, CERAMIC 100000PF F 1608
C227	1-131-992-11	s	CAP, CERAMIC 100000PF F 1608
C228	1-131-992-11	s	CAP, CERAMIC 100000PF F 1608
C230	1-126-394-11	s	CAPACITOR,ELECT 10MF/16V(CHIP)
C231	1-131-992-11	s	CAP, CERAMIC 100000PF F 1608
C232	1-131-992-11	s	CAP, CERAMIC 100000PF F 1608
C233	1-131-992-11	s	CAP, CERAMIC 100000PF F 1608
C234	1-131-992-11	s	CAP, CERAMIC 100000PF F 1608
C235	1-131-992-11	s	CAP, CERAMIC 100000PF F 1608
C300	1-131-992-11	s	CAP, CERAMIC 100000PF F 1608
C301	1-131-992-11	s	CAP, CERAMIC 100000PF F 1608
C302	1-131-992-11	s	CAP, CERAMIC 100000PF F 1608
C303	1-131-992-11	s	CAP, CERAMIC 100000PF F 1608
C304	1-126-394-11	s	CAPACITOR,ELECT 10MF/16V(CHIP)
C315	1-131-992-11	s	CAP, CERAMIC 100000PF F 1608
C316	1-131-992-11	s	CAP, CERAMIC 100000PF F 1608
C331	1-126-394-11	s	CAPACITOR,ELECT 10MF/16V(CHIP)
C332	1-131-992-11	s	CAP, CERAMIC 100000PF F 1608
C333	1-131-992-11	s	CAP, CERAMIC 100000PF F 1608
C334	1-131-992-11	s	CAP, CERAMIC 100000PF F 1608
C335	1-131-992-11	s	CAP, CERAMIC 100000PF F 1608
C412	1-126-394-11	s	CAPACITOR,ELECT 10MF/16V(CHIP)
C413	1-131-992-11	s	CAP, CERAMIC 100000PF F 1608
C440	1-131-992-11	s	CAP, CERAMIC 100000PF F 1608
C664	*2 1-165-870-21	s	CAPACITOR, ELECT 100MF(6.3X6)
	*1 1-165-811-11	s	CAPACITOR CHIP CERAMIC 22MF B
C685	1-162-925-11	s	CAPACITOR,CERAMIC 68PF/50V CH
C686	*2 1-165-872-21	s	CAPACITOR,SOLID ELECT 47MF
	*1 1-110-569-21	s	CAPACITOR CHIP TANTAL47MF/6.3V
C700	1-131-992-11	s	CAP, CERAMIC 100000PF F 1608
C701	1-113-503-11	s	CAPACITOR,CERAMIC 3900PF CH
C702	1-162-968-11	s	CAPACITOR,CERAMIC 4700PF/50V B
C703	1-131-992-11	s	CAP, CERAMIC 100000PF F 1608
C704	1-131-992-11	s	CAP, CERAMIC 100000PF F 1608
C705	1-131-992-11	s	CAP, CERAMIC 100000PF F 1608
C706	1-131-992-11	s	CAP, CERAMIC 100000PF F 1608
C707	1-131-992-11	s	CAP, CERAMIC 100000PF F 1608
C708	1-131-992-11	s	CAP, CERAMIC 100000PF F 1608
C709	1-131-992-11	s	CAP, CERAMIC 100000PF F 1608
C710	1-131-992-11	s	CAP, CERAMIC 100000PF F 1608
C711	1-131-992-11	s	CAP, CERAMIC 100000PF F 1608
C712	1-131-992-11	s	CAP, CERAMIC 100000PF F 1608
C713	1-113-503-11	s	CAPACITOR,CERAMIC 3900PF CH
C714	1-162-968-11	s	CAPACITOR,CERAMIC 4700PF/50V B
C715	1-131-992-11	s	CAP, CERAMIC 100000PF F 1608
C716	1-131-992-11	s	CAP, CERAMIC 100000PF F 1608
C717	1-131-992-11	s	CAP, CERAMIC 100000PF F 1608
C718	1-131-992-11	s	CAP, CERAMIC 100000PF F 1608
C719	1-131-992-11	s	CAP, CERAMIC 100000PF F 1608
C720	1-131-992-11	s	CAP, CERAMIC 100000PF F 1608
C721	1-131-992-11	s	CAP, CERAMIC 100000PF F 1608
C722	1-131-992-11	s	CAP, CERAMIC 100000PF F 1608

(DPR-229H BOARD [SUFFIX 11-13])

Ref. No. or Q'ty	Part No.	SP	Description
C723	1-131-992-11	s	CAP, CERAMIC 100000PF F 1608
C724	1-131-992-11	s	CAP, CERAMIC 100000PF F 1608
C810	1-131-992-11	s	CAP, CERAMIC 100000PF F 1608
C811	1-131-992-11	s	CAP, CERAMIC 100000PF F 1608
C812	1-128-590-11	s	CAPACITOR ELECT 100MF/6.3V(105
C813	1-128-590-11	s	CAPACITOR ELECT 100MF/6.3V(105
C814	1-131-992-11	s	CAP, CERAMIC 100000PF F 1608
C815	1-131-992-11	s	CAP, CERAMIC 100000PF F 1608
C816	1-131-992-11	s	CAP, CERAMIC 100000PF F 1608
C817	1-131-992-11	s	CAP, CERAMIC 100000PF F 1608
C818	1-131-992-11	s	CAP, CERAMIC 100000PF F 1608
C819	1-128-590-11	s	CAPACITOR ELECT 100MF/6.3V(105
C820	1-128-590-11	s	CAPACITOR ELECT 100MF/6.3V(105
C821	1-128-590-11	s	CAPACITOR ELECT 100MF/6.3V(105
C822	1-128-590-11	s	CAPACITOR ELECT 100MF/6.3V(105
C823	1-131-992-11	s	CAP, CERAMIC 100000PF F 1608
C827	1-131-992-11	s	CAP, CERAMIC 100000PF F 1608
C829	1-131-992-11	s	CAP, CERAMIC 100000PF F 1608
C831	1-131-992-11	s	CAP, CERAMIC 100000PF F 1608
C832	1-131-992-11	s	CAP, CERAMIC 100000PF F 1608
C837	1-131-992-11	s	CAP, CERAMIC 100000PF F 1608
C838	1-131-992-11	s	CAP, CERAMIC 100000PF F 1608
C839	1-126-394-11	s	CAPACITOR,ELECT 10MF/16V(CHIP)
C842	1-131-992-11	s	CAP, CERAMIC 100000PF F 1608
C844	1-131-992-11	s	CAP, CERAMIC 100000PF F 1608
C845	1-131-992-11	s	CAP, CERAMIC 100000PF F 1608
C847	1-131-992-11	s	CAP, CERAMIC 100000PF F 1608
C849	1-126-394-11	s	CAPACITOR,ELECT 10MF/16V(CHIP)
C850	1-131-992-11	s	CAP, CERAMIC 100000PF F 1608
C851	1-131-992-11	s	CAP, CERAMIC 100000PF F 1608
C852	1-131-992-11	s	CAP, CERAMIC 100000PF F 1608
C853	1-126-394-11	s	CAPACITOR,ELECT 10MF/16V(CHIP)
C862	1-131-992-11	s	CAP, CERAMIC 100000PF F 1608
C864	1-131-992-11	s	CAP, CERAMIC 100000PF F 1608
C865	1-131-992-11	s	CAP, CERAMIC 100000PF F 1608
C867 *2	1-127-861-11	s	CAP, CERAMIC 2.2MF B (3216)
*1	1-113-986-11	s	CAPACITOR,TANTALUM 2.2MF/25V
C868 *2	1-127-861-11	s	CAP, CERAMIC 2.2MF B (3216)
*1	1-113-986-11	s	CAPACITOR,TANTALUM 2.2MF/25V
C869	1-131-992-11	s	CAP, CERAMIC 100000PF F 1608
CN16	1-580-789-91	s	PIN, CONNECTOR 6P
E100	1-535-877-22	s	CHIP,CHECKER (TEST POINT)
E200	1-535-877-22	s	CHIP,CHECKER (TEST POINT)
E300	1-535-877-22	s	CHIP,CHECKER (TEST POINT)
E400	1-535-877-22	s	CHIP,CHECKER (TEST POINT)
E401	1-535-877-22	s	CHIP,CHECKER (TEST POINT)
E700	1-535-877-22	s	CHIP,CHECKER (TEST POINT)
E800	1-535-877-22	s	CHIP,CHECKER (TEST POINT)
F800 ⚠	1-576-270-11	s	FUSE CHIP 4A/125V (6125)
F802 ⚠	1-576-270-11	s	FUSE CHIP 4A/125V (6125)
F803 ⚠	1-576-270-11	s	FUSE CHIP 4A/125V (6125)
FB200	1-469-094-11	s	FERRITE, EMI (SMD)
FL200	1-239-898-22	s	FILTER, EMI (SMD)
IC100	8-759-549-15	s	IC SN74LV245APWR
IC101	8-759-549-15	s	IC SN74LV245APWR
IC102	8-759-523-84	s	IC TC74VHC14FT (EL)

(DPR-229H BOARD [SUFFIX 11-13])

Ref. No. or Q'ty	Part No.	SP	Description
IC103	8-759-491-46	s	IC TC74VHCT04AFT (EL)
IC104	8-759-491-46	s	IC TC74VHCT04AFT (EL)
IC105	8-759-523-94	s	IC TC74VHC32FT(EL)
IC106	8-759-549-01	s	IC SN74LV125APWR
IC107	8-759-392-77	s	IC SN74LVC245APW (E20)
IC108	8-759-549-15	s	IC SN74LV245APWR
IC109	8-759-524-07	s	IC TC74VHC138FT(EL)
IC110	8-759-549-15	s	IC SN74LV245APWR
IC111	8-759-491-46	s	IC TC74VHCT04AFT (EL)
IC112	8-759-549-15	s	IC SN74LV245APWR
IC113	8-759-549-15	s	IC SN74LV245APWR
IC114	8-759-549-15	s	IC SN74LV245APWR
IC115	8-759-549-15	s	IC SN74LV245APWR
IC116	8-759-549-15	s	IC SN74LV245APWR
IC117	8-759-549-15	s	IC SN74LV245APWR
IC118	8-759-524-07	s	IC TC74VHC138FT(EL)
IC119	8-759-524-07	s	IC TC74VHC138FT(EL)
IC120	8-759-523-81	s	IC TC74VHC08FT(EL)
IC121	6-706-487-01	s	IC TC7SH08FU(T5RSOYJF)
IC122	8-759-523-92	s	IC TC74VHC21FT(EL)
IC123	8-759-549-15	s	IC SN74LV245APWR
IC124	8-752-392-03	s	IC CXD1095BR
IC125	6-706-487-01	s	IC TC7SH08FU(T5RSOYJF)
IC126	6-706-482-01	s	IC TC7SH00FU(T5RSOYJF)
IC200	8-759-475-55	s	IC TC74LCX574FT(EL)
IC201	8-759-475-55	s	IC TC74LCX574FT(EL)
IC202	8-759-475-55	s	IC TC74LCX574FT(EL)
IC203	8-759-669-41	s	IC SN74LVC125APWR-12
IC204	6-706-484-01	s	IC TC7SH04FU(T5RSOYJF)
IC205	8-759-669-41	s	IC SN74LVC125APWR-12
IC208	8-759-392-77	s	IC SN74LVC245APW (E20)
IC209	8-759-392-77	s	IC SN74LVC245APW (E20)
IC210	8-759-392-77	s	IC SN74LVC245APW (E20)
IC211 *3	6-705-983-01	s	IC IS42S32200B-6TL-TR
*1	6-702-238-11	s	IC HY57V643220CT-7TR
IC212	8-759-712-32	s	IC SN65LVDS389DBTR
IC213	8-759-712-32	s	IC SN65LVDS389DBTR
IC214	8-759-712-32	s	IC SN65LVDS389DBTR
IC217	6-706-484-01	s	IC TC7SH04FU(T5RSOYJF)
IC302	8-759-524-10	s	IC TC74VHC157FT (EL)
IC303	8-759-524-10	s	IC TC74VHC157FT (EL)
IC413	8-759-639-86	s	IC SN65LVDS32DR
IC655	8-759-664-03	s	IC LP3964EMPX-ADJ
IC700	8-752-392-03	s	IC CXD1095BR
IC701	6-702-254-01	s	IC DSPB56362PV100-1J21D
IC702	8-759-543-83	s	IC KM416V1204CT-L6
IC703	8-759-543-83	s	IC KM416V1204CT-L6
IC704	6-702-254-01	s	IC DSPB56362PV100-1J21D
IC705	8-759-543-83	s	IC KM416V1204CT-L6
IC706	8-759-543-83	s	IC KM416V1204CT-L6
IC801	8-759-549-15	s	IC SN74LV245APWR
IC802	6-706-487-01	s	IC TC7SH08FU(T5RSOYJF)
IC803	8-759-491-46	s	IC TC74VHCT04AFT (EL)
IC804	8-759-669-41	s	IC SN74LVC125APWR-12
IC805	8-759-475-43	s	IC TC74LCX125FT(EL)
IC808	8-759-549-15	s	IC SN74LV245APWR
IC809	8-759-523-78	s	IC TC74VHC00FT(EL)
IC810	8-759-392-77	s	IC SN74LVC245APW (E20)
IC812	8-759-669-41	s	IC SN74LVC125APWR-12

(DPR-229H BOARD [SUFFIX 11-13])

Ref. No. or Q'ty	Part No.	SP	Description
IC817	8-759-549-01	s	IC SN74LV125APWR
IC818	8-759-549-15	s	IC SN74LV245APWR
IC819	8-759-524-10	s	IC TC74VHC157FT (EL)
IC822	8-759-549-01	s	IC SN74LV125APWR
IC823	8-759-549-15	s	IC SN74LV245APWR
IC825	8-759-549-15	s	IC SN74LV245APWR
IC829	8-759-524-10	s	IC TC74VHC157FT (EL)
IC831	8-759-524-27	s	IC TC74VHC244FT(EL)
IC832	6-706-484-01	s	IC TC7SH04FU(T5RSOYJF)
IC833	6-803-242-02	s	IC XC18V02-DPR229IMX-V4.00
L100	1-412-056-11	s	INDUCTOR 4.7UH (3225)
L101	1-412-056-11	s	INDUCTOR 4.7UH (3225)
L102	1-412-056-11	s	INDUCTOR 4.7UH (3225)
L103	1-412-056-11	s	INDUCTOR 4.7UH (3225)
L200	1-412-056-11	s	INDUCTOR 4.7UH (3225)
L201	1-412-056-11	s	INDUCTOR 4.7UH (3225)
L202	1-412-056-11	s	INDUCTOR 4.7UH (3225)
L402	1-412-056-11	s	INDUCTOR 4.7UH (3225)
L651	1-412-056-11	s	INDUCTOR 4.7UH (3225)
L800	1-419-630-11	s	COIL, CHOKE 4.7UH
L801	1-419-630-11	s	COIL, CHOKE 4.7UH
L802	1-419-630-11	s	COIL, CHOKE 4.7UH
L803	1-419-630-11	s	COIL, CHOKE 4.7UH
L804	1-412-056-11	s	INDUCTOR 4.7UH (3225)
L806	1-412-056-11	s	INDUCTOR 4.7UH (3225)
L808	1-412-056-11	s	INDUCTOR 4.7UH (3225)
Q200	8-729-928-81	s	TRANSISTOR DTC144EE
Q800	8-729-928-81	s	TRANSISTOR DTC144EE
Q801	8-729-045-53	s	TRANSISTOR SI4431DY-T1
Q802	8-729-140-63	s	TRANSISTOR 2SA1611-M5M6
R100	1-218-895-11	s	RESISTOR,CHIP 100K 1/10W(1608)
R101	1-218-895-11	s	RESISTOR,CHIP 100K 1/10W(1608)
R102	1-218-895-11	s	RESISTOR,CHIP 100K 1/10W(1608)
R103	1-218-895-11	s	RESISTOR,CHIP 100K 1/10W(1608)
R105	1-218-895-11	s	RESISTOR,CHIP 100K 1/10W(1608)
R106	1-211-985-11	s	RESISTOR,CHIP 47 1/10W (1608)
R107	1-211-985-11	s	RESISTOR,CHIP 47 1/10W (1608)
R108	1-211-985-11	s	RESISTOR,CHIP 47 1/10W (1608)
R109	1-211-985-11	s	RESISTOR,CHIP 47 1/10W (1608)
R110	1-218-895-11	s	RESISTOR,CHIP 100K 1/10W(1608)
R111	1-218-823-11	s	RESISTOR,CHIP 100 1/10W (1608)
R113	1-218-895-11	s	RESISTOR,CHIP 100K 1/10W(1608)
R114	1-218-895-11	s	RESISTOR,CHIP 100K 1/10W(1608)
R115	1-218-895-11	s	RESISTOR,CHIP 100K 1/10W(1608)
R116	1-218-895-11	s	RESISTOR,CHIP 100K 1/10W(1608)
R117	1-218-863-11	s	RESISTOR,CHIP 4.7K 1/10W(1608)
R118	1-218-863-11	s	RESISTOR,CHIP 4.7K 1/10W(1608)
R122	1-218-863-11	s	RESISTOR,CHIP 4.7K 1/10W(1608)
R130	1-216-864-11	s	CONDUCTOR, CHIP (1608)
R131	1-216-864-11	s	CONDUCTOR, CHIP (1608)
R132	1-216-864-11	s	CONDUCTOR, CHIP (1608)
R133	1-216-864-11	s	CONDUCTOR, CHIP (1608)
R134	1-218-863-11	s	RESISTOR,CHIP 4.7K 1/10W(1608)
R136	1-211-977-11	s	RESISTOR,CHIP 22 1/10W (1608)
R138	1-218-895-11	s	RESISTOR,CHIP 100K 1/10W(1608)
R139	1-218-895-11	s	RESISTOR,CHIP 100K 1/10W(1608)
R141	1-216-864-11	s	CONDUCTOR, CHIP (1608)
R143 *2	1-218-895-11	s	RESISTOR,CHIP 100K 1/10W(1608)

(DPR-229H BOARD [SUFFIX 11-13])

Ref. No. or Q'ty	Part No.	SP	Description
R144 *2	1-211-977-11	s	RESISTOR,CHIP 22 1/10W (1608)
R200	1-218-831-11	s	RESISTOR, CHIP 220 1/10W(1608)
R202	1-216-864-11	s	CONDUCTOR, CHIP (1608)
R203	1-211-985-11	s	RESISTOR,CHIP 47 1/10W (1608)
R204	1-211-977-11	s	RESISTOR,CHIP 22 1/10W (1608)
R207	1-216-864-11	s	CONDUCTOR, CHIP (1608)
R208	1-218-871-11	s	RESISTOR,CHIP 10K 1/10W (1608)
R209	1-216-864-11	s	CONDUCTOR, CHIP (1608)
R210	1-216-864-11	s	CONDUCTOR, CHIP (1608)
R212	1-216-864-11	s	CONDUCTOR, CHIP (1608)
R213	1-216-864-11	s	CONDUCTOR, CHIP (1608)
R215	1-216-864-11	s	CONDUCTOR, CHIP (1608)
R216	1-216-864-11	s	CONDUCTOR, CHIP (1608)
R217	1-216-864-11	s	CONDUCTOR, CHIP (1608)
R218	1-211-977-11	s	RESISTOR,CHIP 22 1/10W (1608)
R219	1-218-863-11	s	RESISTOR,CHIP 4.7K 1/10W(1608)
R220	1-216-864-11	s	CONDUCTOR, CHIP (1608)
R221	1-216-864-11	s	CONDUCTOR, CHIP (1608)
R222	1-218-863-11	s	RESISTOR,CHIP 4.7K 1/10W(1608)
R300	1-216-864-11	s	CONDUCTOR, CHIP (1608)
R301	1-216-864-11	s	CONDUCTOR, CHIP (1608)
R302	1-216-864-11	s	CONDUCTOR, CHIP (1608)
R303	1-218-863-11	s	RESISTOR,CHIP 4.7K 1/10W(1608)
R304	1-218-863-11	s	RESISTOR,CHIP 4.7K 1/10W(1608)
R305	1-218-863-11	s	RESISTOR,CHIP 4.7K 1/10W(1608)
R306	1-218-895-11	s	RESISTOR,CHIP 100K 1/10W(1608)
R307	1-218-863-11	s	RESISTOR,CHIP 4.7K 1/10W(1608)
R336 *2	1-216-864-11	s	CONDUCTOR, CHIP (1608)
R349	1-216-864-11	s	CONDUCTOR, CHIP (1608)
R351	1-211-977-11	s	RESISTOR,CHIP 22 1/10W (1608)
R352	1-211-977-11	s	RESISTOR,CHIP 22 1/10W (1608)
R353	1-218-863-11	s	RESISTOR,CHIP 4.7K 1/10W(1608)
R354	1-218-863-11	s	RESISTOR,CHIP 4.7K 1/10W(1608)
R355	1-218-863-11	s	RESISTOR,CHIP 4.7K 1/10W(1608)
R357	1-218-895-11	s	RESISTOR,CHIP 100K 1/10W(1608)
R358	1-218-895-11	s	RESISTOR,CHIP 100K 1/10W(1608)
R359	1-211-977-11	s	RESISTOR,CHIP 22 1/10W (1608)
R428	1-218-823-11	s	RESISTOR,CHIP 100 1/10W (1608)
R429	1-218-823-11	s	RESISTOR,CHIP 100 1/10W (1608)
R430	1-218-823-11	s	RESISTOR,CHIP 100 1/10W (1608)
R431	1-218-823-11	s	RESISTOR,CHIP 100 1/10W (1608)
R432	1-211-977-11	s	RESISTOR,CHIP 22 1/10W (1608)
R433	1-211-977-11	s	RESISTOR,CHIP 22 1/10W (1608)
R434	1-211-977-11	s	RESISTOR,CHIP 22 1/10W (1608)
R441	1-216-864-11	s	CONDUCTOR, CHIP (1608)
R651	1-216-864-11	s	CONDUCTOR, CHIP (1608)
R672	1-218-871-11	s	RESISTOR,CHIP 10K 1/10W (1608)
R673	1-218-856-11	s	RESISTOR,CHIP 2.4K 1/10W(1608)
R674	1-218-871-11	s	RESISTOR,CHIP 10K 1/10W (1608)
R676 *2	1-211-899-11	s	RESISTOR,CHIP 0.221/4W (3225)
R715	1-216-864-11	s	CONDUCTOR, CHIP (1608)
R716	1-216-864-11	s	CONDUCTOR, CHIP (1608)
R717	1-216-864-11	s	CONDUCTOR, CHIP (1608)
R718	1-216-864-11	s	CONDUCTOR, CHIP (1608)
R719	1-216-864-11	s	CONDUCTOR, CHIP (1608)
R720	1-216-864-11	s	CONDUCTOR, CHIP (1608)
R722	1-216-864-11	s	CONDUCTOR, CHIP (1608)
R723	1-216-864-11	s	CONDUCTOR, CHIP (1608)
R724	1-216-864-11	s	CONDUCTOR, CHIP (1608)

(DPR-229H BOARD [SUFFIX 11-13])

Ref. No. or Q'ty	Part No.	SP	Description
R725	1-216-864-11	s	CONDUCTOR, CHIP (1608)
R726	1-216-864-11	s	CONDUCTOR, CHIP (1608)
R727	1-216-864-11	s	CONDUCTOR, CHIP (1608)
R728	1-216-864-11	s	CONDUCTOR, CHIP (1608)
R729	1-216-864-11	s	CONDUCTOR, CHIP (1608)
R738	1-218-847-11	s	RESISTOR, CHIP 1K 1/10W (1608)
R739	1-218-847-11	s	RESISTOR, CHIP 1K 1/10W (1608)
R740	1-218-847-11	s	RESISTOR, CHIP 1K 1/10W (1608)
R748	1-216-864-11	s	CONDUCTOR, CHIP (1608)
R749	1-216-864-11	s	CONDUCTOR, CHIP (1608)
R750	1-216-864-11	s	CONDUCTOR, CHIP (1608)
R751	1-216-864-11	s	CONDUCTOR, CHIP (1608)
R752	1-216-864-11	s	CONDUCTOR, CHIP (1608)
R753	1-216-864-11	s	CONDUCTOR, CHIP (1608)
R755	1-216-864-11	s	CONDUCTOR, CHIP (1608)
R756	1-216-864-11	s	CONDUCTOR, CHIP (1608)
R757	1-216-864-11	s	CONDUCTOR, CHIP (1608)
R758	1-216-864-11	s	CONDUCTOR, CHIP (1608)
R759	1-216-864-11	s	CONDUCTOR, CHIP (1608)
R760	1-216-864-11	s	CONDUCTOR, CHIP (1608)
R761	1-216-864-11	s	CONDUCTOR, CHIP (1608)
R762	1-216-864-11	s	CONDUCTOR, CHIP (1608)
R771	1-218-847-11	s	RESISTOR, CHIP 1K 1/10W (1608)
R772	1-218-847-11	s	RESISTOR, CHIP 1K 1/10W (1608)
R773	1-218-847-11	s	RESISTOR, CHIP 1K 1/10W (1608)
R796	1-216-864-11	s	CONDUCTOR, CHIP (1608)
R797	1-216-864-11	s	CONDUCTOR, CHIP (1608)
R811	1-216-864-11	s	CONDUCTOR, CHIP (1608)
R813	1-218-831-11	s	RESISTOR, CHIP 220 1/10W(1608)
R814	1-218-831-11	s	RESISTOR, CHIP 220 1/10W(1608)
R815	1-218-831-11	s	RESISTOR, CHIP 220 1/10W(1608)
R820	1-211-977-11	s	RESISTOR,CHIP 22 1/10W (1608)
R831	1-211-977-11	s	RESISTOR,CHIP 22 1/10W (1608)
R834	1-218-895-11	s	RESISTOR,CHIP 100K 1/10W(1608)
R835	1-218-895-11	s	RESISTOR,CHIP 100K 1/10W(1608)
R839	1-216-864-11	s	CONDUCTOR, CHIP (1608)
R841	1-211-977-11	s	RESISTOR,CHIP 22 1/10W (1608)
R851	1-216-864-11	s	CONDUCTOR, CHIP (1608)
R852	1-216-864-11	s	CONDUCTOR, CHIP (1608)
R854	1-211-977-11	s	RESISTOR,CHIP 22 1/10W (1608)
R856	1-211-977-11	s	RESISTOR,CHIP 22 1/10W (1608)
R863	1-218-871-11	s	RESISTOR,CHIP 10K 1/10W (1608)
R864	1-218-847-11	s	RESISTOR, CHIP 1K 1/10W (1608)
R865	1-218-847-11	s	RESISTOR, CHIP 1K 1/10W (1608)
R866	1-218-835-11	s	RESISTOR,CHIP 330 1/10W (1608)
R867	1-218-835-11	s	RESISTOR,CHIP 330 1/10W (1608)
R1037	1-216-864-11	s	CONDUCTOR, CHIP (1608)
R1038	1-216-864-11	s	CONDUCTOR, CHIP (1608)
R1039	1-216-864-11	s	CONDUCTOR, CHIP (1608)
R1040	1-216-864-11	s	CONDUCTOR, CHIP (1608)
R1052	1-218-895-11	s	RESISTOR,CHIP 100K 1/10W(1608)
R1053	1-218-895-11	s	RESISTOR,CHIP 100K 1/10W(1608)
R1054	1-216-864-11	s	CONDUCTOR, CHIP (1608)
RB100	1-233-810-21	s	RES, NETWORK 100K (3216)
RB101	1-233-810-21	s	RES, NETWORK 100K (3216)
RB102	1-239-409-11	s	RESISTOR NETWORK 47 (1608)
RB103	1-239-409-11	s	RESISTOR NETWORK 47 (1608)
RB104	1-233-810-21	s	RES, NETWORK 100K (3216)

(DPR-229H BOARD [SUFFIX 11-13])

Ref. No. or Q'ty	Part No.	SP	Description
RB106	1-234-397-11	s	NETWORK, RES (8 GANG) 100K
RB107	1-234-397-11	s	NETWORK, RES (8 GANG) 100K
RB108	1-233-575-11	s	RES, CHIP NETWORK 22
RB109	1-233-575-11	s	RES, CHIP NETWORK 22
RB110	1-233-575-11	s	RES, CHIP NETWORK 22
RB111	1-233-575-11	s	RES, CHIP NETWORK 22
RB112	1-233-575-11	s	RES, CHIP NETWORK 22
RB113	1-234-397-11	s	NETWORK, RES (8 GANG) 100K
RB114	1-233-576-11	s	RESISTOR,CHIP NETWORK 100
RB115	1-233-576-11	s	RESISTOR,CHIP NETWORK 100
RB116	1-233-810-21	s	RES, NETWORK 100K (3216)
RB117	1-234-397-11	s	NETWORK, RES (8 GANG) 100K
RB118	1-234-397-11	s	NETWORK, RES (8 GANG) 100K
RB119	1-234-397-11	s	NETWORK, RES (8 GANG) 100K
RB120	1-234-397-11	s	NETWORK, RES (8 GANG) 100K
RB121	1-233-576-11	s	RESISTOR,CHIP NETWORK 100
RB122	1-233-576-11	s	RESISTOR,CHIP NETWORK 100
RB123	1-234-397-11	s	NETWORK, RES (8 GANG) 100K
RB200	1-233-411-11	s	RESISTOR,CHIP NETWORK 220/3216
RB201	1-233-411-11	s	RESISTOR,CHIP NETWORK 220/3216
RB202	1-233-411-11	s	RESISTOR,CHIP NETWORK 220/3216
RB203	1-233-411-11	s	RESISTOR,CHIP NETWORK 220/3216
RB204	1-233-411-11	s	RESISTOR,CHIP NETWORK 220/3216
RB205	1-233-575-11	s	RES, CHIP NETWORK 22
RB206	1-233-575-11	s	RES, CHIP NETWORK 22
RB213	1-239-409-11	s	RESISTOR NETWORK 47 (1608)
RB214	1-239-409-11	s	RESISTOR NETWORK 47 (1608)
RB215	1-239-409-11	s	RESISTOR NETWORK 47 (1608)
RB216	1-239-409-11	s	RESISTOR NETWORK 47 (1608)
RB217	1-239-409-11	s	RESISTOR NETWORK 47 (1608)
RB218	1-239-409-11	s	RESISTOR NETWORK 47 (1608)
RB300	1-233-810-21	s	RES, NETWORK 100K (3216)
RB700	1-233-810-21	s	RES, NETWORK 100K (3216)
RB701	1-233-810-21	s	RES, NETWORK 100K (3216)
RB702	1-233-810-21	s	RES, NETWORK 100K (3216)
RB703	1-233-810-21	s	RES, NETWORK 100K (3216)
RB704	1-233-810-21	s	RES, NETWORK 100K (3216)
RB705	1-233-810-21	s	RES, NETWORK 100K (3216)
RB706	1-233-810-21	s	RES, NETWORK 100K (3216)
RB707	1-233-810-21	s	RES, NETWORK 100K (3216)
RB708	1-233-810-21	s	RES, NETWORK 100K (3216)
RB709	1-234-397-11	s	NETWORK, RES (8 GANG) 100K
RB710	1-234-397-11	s	NETWORK, RES (8 GANG) 100K
RB801	1-233-810-21	s	RES, NETWORK 100K (3216)
RB804	1-233-411-11	s	RESISTOR,CHIP NETWORK 220/3216
RB805	1-233-411-11	s	RESISTOR,CHIP NETWORK 220/3216
RB806	1-233-411-11	s	RESISTOR,CHIP NETWORK 220/3216
RB807	1-233-414-11	s	RESISTOR,CHIP NETWORK 4.7K
RB811	1-239-409-11	s	RESISTOR NETWORK 47 (1608)
RB812	1-239-409-11	s	RESISTOR NETWORK 47 (1608)
RB813	1-233-810-21	s	RES, NETWORK 100K (3216)
RB814	1-233-810-21	s	RES, NETWORK 100K (3216)
RB815	1-233-810-21	s	RES, NETWORK 100K (3216)
RB816	1-233-810-21	s	RES, NETWORK 100K (3216)
RB817	1-233-414-11	s	RESISTOR,CHIP NETWORK 4.7K
RB818	1-236-908-11	s	RESISTOR,NETWORK 10K (3216)
RB819	1-233-810-21	s	RES, NETWORK 100K (3216)
X200	1-781-809-21	s	OSCILLATOR, CRYSTAL (SMD)

DPR-229H BOARD [SUFFIX 14-]

[Lot No. 561 -] HDW-2000, A2100

Ref. No. or Q'ty	Part No.	SP	Description
1pc	A-8346-099-A	s	MOUNTED CIRCUIT BOARD, DPR-229H
1pc	3-179-084-11	s	LEVER (R), C BOARD
1pc	3-179-085-11	s	LEVER (L), C BOARD
C100	1-131-992-11	s	CAP, CERAMIC 100000PF F 1608
C101	1-131-992-11	s	CAP, CERAMIC 100000PF F 1608
C102	1-162-927-11	s	CAPACITOR,CERAMIC 100PF/50V CH
C103	1-126-394-11	s	CAPACITOR,ELECT 10MF/16V(CHIP)
C104	1-131-992-11	s	CAP, CERAMIC 100000PF F 1608
C105	1-131-992-11	s	CAP, CERAMIC 100000PF F 1608
C106	1-131-992-11	s	CAP, CERAMIC 100000PF F 1608
C107	1-131-992-11	s	CAP, CERAMIC 100000PF F 1608
C108	1-131-992-11	s	CAP, CERAMIC 100000PF F 1608
C109	1-131-992-11	s	CAP, CERAMIC 100000PF F 1608
C110	1-131-992-11	s	CAP, CERAMIC 100000PF F 1608
C111	1-131-992-11	s	CAP, CERAMIC 100000PF F 1608
C112	1-131-992-11	s	CAP, CERAMIC 100000PF F 1608
C113	1-131-992-11	s	CAP, CERAMIC 100000PF F 1608
C114	1-131-992-11	s	CAP, CERAMIC 100000PF F 1608
C115	1-131-992-11	s	CAP, CERAMIC 100000PF F 1608
C116	1-131-992-11	s	CAP, CERAMIC 100000PF F 1608
C117	1-131-992-11	s	CAP, CERAMIC 100000PF F 1608
C118	1-131-992-11	s	CAP, CERAMIC 100000PF F 1608
C119	1-131-992-11	s	CAP, CERAMIC 100000PF F 1608
C120	1-131-992-11	s	CAP, CERAMIC 100000PF F 1608
C121	1-131-992-11	s	CAP, CERAMIC 100000PF F 1608
C122	1-131-992-11	s	CAP, CERAMIC 100000PF F 1608
C123	1-131-992-11	s	CAP, CERAMIC 100000PF F 1608
C124	1-131-992-11	s	CAP, CERAMIC 100000PF F 1608
C125	1-131-992-11	s	CAP, CERAMIC 100000PF F 1608
C126	1-131-992-11	s	CAP, CERAMIC 100000PF F 1608
C127	1-131-992-11	s	CAP, CERAMIC 100000PF F 1608
C200	1-126-394-11	s	CAPACITOR,ELECT 10MF/16V(CHIP)
C201	1-131-992-11	s	CAP, CERAMIC 100000PF F 1608
C202	1-131-992-11	s	CAP, CERAMIC 100000PF F 1608
C203	1-131-992-11	s	CAP, CERAMIC 100000PF F 1608
C204	1-126-394-11	s	CAPACITOR,ELECT 10MF/16V(CHIP)
C205	1-131-992-11	s	CAP, CERAMIC 100000PF F 1608
C206	1-131-992-11	s	CAP, CERAMIC 100000PF F 1608
C207	1-126-394-11	s	CAPACITOR,ELECT 10MF/16V(CHIP)
C208	1-131-992-11	s	CAP, CERAMIC 100000PF F 1608
C209	1-131-992-11	s	CAP, CERAMIC 100000PF F 1608
C210	1-131-992-11	s	CAP, CERAMIC 100000PF F 1608
C211	1-127-692-91	s	CAP, CHIP CERAMIC 10MF B 3216
C212	1-127-692-91	s	CAP, CHIP CERAMIC 10MF B 3216
C213	1-131-992-11	s	CAP, CERAMIC 100000PF F 1608
C214	1-131-992-11	s	CAP, CERAMIC 100000PF F 1608
C215	1-131-992-11	s	CAP, CERAMIC 100000PF F 1608
C216	1-131-992-11	s	CAP, CERAMIC 100000PF F 1608
C217	1-131-992-11	s	CAP, CERAMIC 100000PF F 1608
C218	1-131-992-11	s	CAP, CERAMIC 100000PF F 1608
C219	1-131-992-11	s	CAP, CERAMIC 100000PF F 1608
C220	1-131-992-11	s	CAP, CERAMIC 100000PF F 1608
C221	1-131-992-11	s	CAP, CERAMIC 100000PF F 1608
C222	1-131-992-11	s	CAP, CERAMIC 100000PF F 1608
C223	1-131-992-11	s	CAP, CERAMIC 100000PF F 1608
C224	1-131-992-11	s	CAP, CERAMIC 100000PF F 1608
C225	1-131-992-11	s	CAP, CERAMIC 100000PF F 1608

(DPR-229H BOARD [SUFFIX 14-])

Ref. No. or Q'ty	Part No.	SP	Description
C226	1-131-992-11	s	CAP, CERAMIC 100000PF F 1608
C227	1-131-992-11	s	CAP, CERAMIC 100000PF F 1608
C228	1-131-992-11	s	CAP, CERAMIC 100000PF F 1608
C230	1-126-394-11	s	CAPACITOR,ELECT 10MF/16V(CHIP)
C231	1-131-992-11	s	CAP, CERAMIC 100000PF F 1608
C232	1-131-992-11	s	CAP, CERAMIC 100000PF F 1608
C233	1-131-992-11	s	CAP, CERAMIC 100000PF F 1608
C234	1-131-992-11	s	CAP, CERAMIC 100000PF F 1608
C235	1-131-992-11	s	CAP, CERAMIC 100000PF F 1608
C300	1-131-992-11	s	CAP, CERAMIC 100000PF F 1608
C301	1-131-992-11	s	CAP, CERAMIC 100000PF F 1608
C302	1-131-992-11	s	CAP, CERAMIC 100000PF F 1608
C303	1-131-992-11	s	CAP, CERAMIC 100000PF F 1608
C304	1-126-394-11	s	CAPACITOR,ELECT 10MF/16V(CHIP)
C315	1-131-992-11	s	CAP, CERAMIC 100000PF F 1608
C316	1-131-992-11	s	CAP, CERAMIC 100000PF F 1608
C331	1-126-394-11	s	CAPACITOR,ELECT 10MF/16V(CHIP)
C332	1-131-992-11	s	CAP, CERAMIC 100000PF F 1608
C333	1-131-992-11	s	CAP, CERAMIC 100000PF F 1608
C334	1-131-992-11	s	CAP, CERAMIC 100000PF F 1608
C335	1-131-992-11	s	CAP, CERAMIC 100000PF F 1608
C412	1-126-394-11	s	CAPACITOR,ELECT 10MF/16V(CHIP)
C413	1-131-992-11	s	CAP, CERAMIC 100000PF F 1608
C440	1-131-992-11	s	CAP, CERAMIC 100000PF F 1608
C664	1-165-870-21	s	CAPACITOR, ELECT 100MF(6.3X6)
C685	1-162-925-11	s	CAPACITOR,CERAMIC 68PF/50V CH
C686	1-165-872-21	s	CAPACITOR,SOLID ELECT 47MF
C700	1-131-992-11	s	CAP, CERAMIC 100000PF F 1608
C701	1-113-503-11	s	CAPACITOR,CERAMIC 3900PF CH
C702	1-162-968-11	s	CAPACITOR,CERAMIC 4700PF/50V B
C703	1-131-992-11	s	CAP, CERAMIC 100000PF F 1608
C704	1-131-992-11	s	CAP, CERAMIC 100000PF F 1608
C705	1-131-992-11	s	CAP, CERAMIC 100000PF F 1608
C706	1-131-992-11	s	CAP, CERAMIC 100000PF F 1608
C707	1-131-992-11	s	CAP, CERAMIC 100000PF F 1608
C708	1-131-992-11	s	CAP, CERAMIC 100000PF F 1608
C709	1-131-992-11	s	CAP, CERAMIC 100000PF F 1608
C710	1-131-992-11	s	CAP, CERAMIC 100000PF F 1608
C711	1-131-992-11	s	CAP, CERAMIC 100000PF F 1608
C712	1-131-992-11	s	CAP, CERAMIC 100000PF F 1608
C713	1-113-503-11	s	CAPACITOR,CERAMIC 3900PF CH
C714	1-162-968-11	s	CAPACITOR,CERAMIC 4700PF/50V B
C715	1-131-992-11	s	CAP, CERAMIC 100000PF F 1608
C716	1-131-992-11	s	CAP, CERAMIC 100000PF F 1608
C717	1-131-992-11	s	CAP, CERAMIC 100000PF F 1608
C718	1-131-992-11	s	CAP, CERAMIC 100000PF F 1608
C719	1-131-992-11	s	CAP, CERAMIC 100000PF F 1608
C720	1-131-992-11	s	CAP, CERAMIC 100000PF F 1608
C721	1-131-992-11	s	CAP, CERAMIC 100000PF F 1608
C722	1-131-992-11	s	CAP, CERAMIC 100000PF F 1608
C723	1-131-992-11	s	CAP, CERAMIC 100000PF F 1608
C724	1-131-992-11	s	CAP, CERAMIC 100000PF F 1608
C810	1-131-992-11	s	CAP, CERAMIC 100000PF F 1608
C811	1-131-992-11	s	CAP, CERAMIC 100000PF F 1608
C812	1-128-590-11	s	CAPACITOR ELECT 100MF/6.3V(105
C813	1-128-590-11	s	CAPACITOR ELECT 100MF/6.3V(105
C814	1-131-992-11	s	CAP, CERAMIC 100000PF F 1608
C815	1-131-992-11	s	CAP, CERAMIC 100000PF F 1608
C816	1-131-992-11	s	CAP, CERAMIC 100000PF F 1608

(DPR-229H BOARD [SUFFIX 14-])

Ref. No. or Q'ty	Part No.	SP	Description
C817	1-131-992-11	s	CAP, CERAMIC 100000PF F 1608
C818	1-131-992-11	s	CAP, CERAMIC 100000PF F 1608
C819	1-128-590-11	s	CAPACITOR ELECT 100MF/6.3V(105
C820	1-128-590-11	s	CAPACITOR ELECT 100MF/6.3V(105
C821	1-128-590-11	s	CAPACITOR ELECT 100MF/6.3V(105
C822	1-128-590-11	s	CAPACITOR ELECT 100MF/6.3V(105
C823	1-131-992-11	s	CAP, CERAMIC 100000PF F 1608
C827	1-131-992-11	s	CAP, CERAMIC 100000PF F 1608
C829	1-131-992-11	s	CAP, CERAMIC 100000PF F 1608
C831	1-131-992-11	s	CAP, CERAMIC 100000PF F 1608
C832	1-131-992-11	s	CAP, CERAMIC 100000PF F 1608
C837	1-131-992-11	s	CAP, CERAMIC 100000PF F 1608
C838	1-131-992-11	s	CAP, CERAMIC 100000PF F 1608
C839	1-126-394-11	s	CAPACITOR,ELECT 10MF/16V(CHIP)
C842	1-131-992-11	s	CAP, CERAMIC 100000PF F 1608
C844	1-131-992-11	s	CAP, CERAMIC 100000PF F 1608
C845	1-131-992-11	s	CAP, CERAMIC 100000PF F 1608
C847	1-131-992-11	s	CAP, CERAMIC 100000PF F 1608
C849	1-126-394-11	s	CAPACITOR,ELECT 10MF/16V(CHIP)
C850	1-131-992-11	s	CAP, CERAMIC 100000PF F 1608
C851	1-131-992-11	s	CAP, CERAMIC 100000PF F 1608
C852	1-131-992-11	s	CAP, CERAMIC 100000PF F 1608
C853	1-126-394-11	s	CAPACITOR,ELECT 10MF/16V(CHIP)
C862	1-131-992-11	s	CAP, CERAMIC 100000PF F 1608
C864	1-131-992-11	s	CAP, CERAMIC 100000PF F 1608
C865	1-131-992-11	s	CAP, CERAMIC 100000PF F 1608
C867	1-127-861-11	s	CAP, CERAMIC 2.2MF B (3216)
C868	1-127-861-11	s	CAP, CERAMIC 2.2MF B (3216)
C869	1-131-992-11	s	CAP, CERAMIC 100000PF F 1608
CN16	1-580-789-91	s	PIN, CONNECTOR 6P
E100	1-535-877-22	s	CHIP,CHECKER (TEST POINT)
E200	1-535-877-22	s	CHIP,CHECKER (TEST POINT)
E300	1-535-877-22	s	CHIP,CHECKER (TEST POINT)
E400	1-535-877-22	s	CHIP,CHECKER (TEST POINT)
E401	1-535-877-22	s	CHIP,CHECKER (TEST POINT)
E700	1-535-877-22	s	CHIP,CHECKER (TEST POINT)
E800	1-535-877-22	s	CHIP,CHECKER (TEST POINT)
F800	⚠ 1-576-270-11	s	FUSE CHIP 4A/125V (6125)
F802	⚠ 1-576-270-11	s	FUSE CHIP 4A/125V (6125)
F803	⚠ 1-576-270-11	s	FUSE CHIP 4A/125V (6125)
FB200	1-469-094-21	s	FERRITE, EMI (SMD)
FL200	1-239-898-22	s	FILTER, EMI (SMD)
IC100	8-759-549-15	s	IC SN74LV245APWR
IC101	8-759-549-15	s	IC SN74LV245APWR
IC102	8-759-523-84	s	IC TC74VHC14FT (EL)
IC103	8-759-491-46	s	IC TC74VHCT04AFT (EL)
IC104	8-759-491-46	s	IC TC74VHCT04AFT (EL)
IC105	8-759-523-94	s	IC TC74VHC32FT(EL)
IC106	8-759-549-01	s	IC SN74LV125APWR
IC107	8-759-392-77	s	IC SN74LVC245APW (E20)
IC108	8-759-549-15	s	IC SN74LV245APWR
IC109	8-759-524-07	s	IC TC74VHC138FT(EL)
IC110	8-759-549-15	s	IC SN74LV245APWR
IC111	8-759-491-46	s	IC TC74VHCT04AFT (EL)
IC112	8-759-549-15	s	IC SN74LV245APWR
IC113	8-759-549-15	s	IC SN74LV245APWR

(DPR-229H BOARD [SUFFIX 14-])

Ref. No. or Q'ty	Part No.	SP	Description
IC114	8-759-549-15	s	IC SN74LV245APWR
IC115	8-759-549-15	s	IC SN74LV245APWR
IC116	8-759-549-15	s	IC SN74LV245APWR
IC117	8-759-549-15	s	IC SN74LV245APWR
IC118	8-759-524-07	s	IC TC74VHC138FT(EL)
IC119	8-759-524-07	s	IC TC74VHC138FT(EL)
IC120	8-759-523-81	s	IC TC74VHC08FT(EL)
IC121	6-706-487-01	s	IC TC7SH08FU(T5RSOYJF)
IC122	8-759-523-92	s	IC TC74VHC21FT(EL)
IC123	8-759-549-15	s	IC SN74LV245APWR
IC124	8-752-392-03	s	IC CXD1095BR
IC125	6-706-487-01	s	IC TC7SH08FU(T5RSOYJF)
IC126	6-706-482-01	s	IC TC7SH00FU(T5RSOYJF)
IC200	8-759-475-55	s	IC TC74LCX574FT(EL)
IC201	8-759-475-55	s	IC TC74LCX574FT(EL)
IC202	8-759-475-55	s	IC TC74LCX574FT(EL)
IC203	8-759-669-41	s	IC SN74LVC125APWR-12
IC204	6-706-484-01	s	IC TC7SH04FU(T5RSOYJF)
IC205	8-759-669-41	s	IC SN74LVC125APWR-12
IC208	8-759-392-77	s	IC SN74LVC245APW (E20)
IC209	8-759-392-77	s	IC SN74LVC245APW (E20)
IC210	8-759-392-77	s	IC SN74LVC245APW (E20)
IC211	6-705-983-01	s	IC IS42S32200B-6TL-TR
IC212	8-759-712-32	s	IC SN65LVDS389DBTR
IC213	8-759-712-32	s	IC SN65LVDS389DBTR
IC214	8-759-712-32	s	IC SN65LVDS389DBTR
IC217	6-706-484-01	s	IC TC7SH04FU(T5RSOYJF)
IC302	8-759-524-10	s	IC TC74VHC157FT (EL)
IC303	8-759-524-10	s	IC TC74VHC157FT (EL)
IC413	8-759-639-86	s	IC SN65LVDS32DR
IC655	8-759-664-03	s	IC LP3964EMPX-ADJ
IC700	8-752-392-03	s	IC CXD1095BR
IC701	6-702-254-01	s	IC DSPB56362PV100-1J21D
IC702	8-759-543-83	s	IC KM416V1204CT-L6
IC703	8-759-543-83	s	IC KM416V1204CT-L6
IC704	6-702-254-01	s	IC DSPB56362PV100-1J21D
IC705	8-759-543-83	s	IC KM416V1204CT-L6
IC706	8-759-543-83	s	IC KM416V1204CT-L6
IC801	8-759-549-15	s	IC SN74LV245APWR
IC802	6-706-487-01	s	IC TC7SH08FU(T5RSOYJF)
IC803	8-759-491-46	s	IC TC74VHCT04AFT (EL)
IC804	8-759-669-41	s	IC SN74LVC125APWR-12
IC805	8-759-475-43	s	IC TC74LCX125FT(EL)
IC808	8-759-549-15	s	IC SN74LV245APWR
IC809	8-759-523-78	s	IC TC74VHC00FT(EL)
IC810	8-759-392-77	s	IC SN74LVC245APW (E20)
IC812	8-759-669-41	s	IC SN74LVC125APWR-12
IC817	8-759-549-01	s	IC SN74LV125APWR
IC818	8-759-549-15	s	IC SN74LV245APWR
IC819	8-759-524-10	s	IC TC74VHC157FT (EL)
IC822	8-759-549-01	s	IC SN74LV125APWR
IC823	8-759-549-15	s	IC SN74LV245APWR
IC825	8-759-549-15	s	IC SN74LV245APWR
IC829	8-759-524-10	s	IC TC74VHC157FT (EL)
IC831	8-759-524-27	s	IC TC74VHC244FT(EL)
IC832	6-706-484-01	s	IC TC7SH04FU(T5RSOYJF)
IC833	6-803-242-02	s	IC XC18V02-DPR229IMX-V4.00
L100	1-412-056-11	s	INDUCTOR 4.7UH (3225)

(DPR-229H BOARD [SUFFIX 14-])

Ref. No. or Q'ty	Part No.	SP	Description
L101	1-412-056-11	s	INDUCTOR 4.7UH (3225)
L102	1-412-056-11	s	INDUCTOR 4.7UH (3225)
L103	1-412-056-11	s	INDUCTOR 4.7UH (3225)
L200	1-412-056-11	s	INDUCTOR 4.7UH (3225)
L201	1-412-056-11	s	INDUCTOR 4.7UH (3225)
L202	1-412-056-11	s	INDUCTOR 4.7UH (3225)
L402	1-412-056-11	s	INDUCTOR 4.7UH (3225)
L651	1-412-056-11	s	INDUCTOR 4.7UH (3225)
L800	1-419-630-11	s	COIL, CHOKE 4.7UH
L801	1-419-630-11	s	COIL, CHOKE 4.7UH
L802	1-419-630-11	s	COIL, CHOKE 4.7UH
L803	1-419-630-11	s	COIL, CHOKE 4.7UH
L804	1-412-056-11	s	INDUCTOR 4.7UH (3225)
L806	1-412-056-11	s	INDUCTOR 4.7UH (3225)
L808	1-412-056-11	s	INDUCTOR 4.7UH (3225)
Q200	8-729-928-81	s	TRANSISTOR DTC144EE
Q800	8-729-928-81	s	TRANSISTOR DTC144EE
Q801	8-729-045-53	s	TRANSISTOR SI4431DY-T1
Q802	8-729-140-63	s	TRANSISTOR 2SA1611-M5M6
R100	1-218-895-11	s	RESISTOR,CHIP 100K 1/10W(1608)
R101	1-218-895-11	s	RESISTOR,CHIP 100K 1/10W(1608)
R102	1-218-895-11	s	RESISTOR,CHIP 100K 1/10W(1608)
R103	1-218-895-11	s	RESISTOR,CHIP 100K 1/10W(1608)
R105	1-218-895-11	s	RESISTOR,CHIP 100K 1/10W(1608)
R106	1-211-985-11	s	RESISTOR,CHIP 47 1/10W (1608)
R107	1-211-985-11	s	RESISTOR,CHIP 47 1/10W (1608)
R108	1-211-985-11	s	RESISTOR,CHIP 47 1/10W (1608)
R109	1-211-985-11	s	RESISTOR,CHIP 47 1/10W (1608)
R110	1-218-895-11	s	RESISTOR,CHIP 100K 1/10W(1608)
R111	1-218-823-11	s	RESISTOR,CHIP 100 1/10W (1608)
R113	1-218-895-11	s	RESISTOR,CHIP 100K 1/10W(1608)
R114	1-218-895-11	s	RESISTOR,CHIP 100K 1/10W(1608)
R115	1-218-895-11	s	RESISTOR,CHIP 100K 1/10W(1608)
R116	1-218-895-11	s	RESISTOR,CHIP 100K 1/10W(1608)
R117	1-218-863-11	s	RESISTOR,CHIP 4.7K 1/10W(1608)
R118	1-218-863-11	s	RESISTOR,CHIP 4.7K 1/10W(1608)
R122	1-218-863-11	s	RESISTOR,CHIP 4.7K 1/10W(1608)
R130	1-216-864-11	s	CONDUCTOR, CHIP (1608)
R131	1-216-864-11	s	CONDUCTOR, CHIP (1608)
R132	1-216-864-11	s	CONDUCTOR, CHIP (1608)
R133	1-216-864-11	s	CONDUCTOR, CHIP (1608)
R134	1-218-863-11	s	RESISTOR,CHIP 4.7K 1/10W(1608)
R136	1-211-977-11	s	RESISTOR,CHIP 22 1/10W (1608)
R138	1-218-895-11	s	RESISTOR,CHIP 100K 1/10W(1608)
R139	1-218-895-11	s	RESISTOR,CHIP 100K 1/10W(1608)
R141	1-216-864-11	s	CONDUCTOR, CHIP (1608)
R143	1-218-895-11	s	RESISTOR,CHIP 100K 1/10W(1608)
R144	1-211-977-11	s	RESISTOR,CHIP 22 1/10W (1608)
R200	1-218-831-11	s	RESISTOR, CHIP 220 1/10W(1608)
R202	1-216-864-11	s	CONDUCTOR, CHIP (1608)
R203	1-211-985-11	s	RESISTOR,CHIP 47 1/10W (1608)
R204	1-211-977-11	s	RESISTOR,CHIP 22 1/10W (1608)
R207	1-216-864-11	s	CONDUCTOR, CHIP (1608)
R208	1-218-871-11	s	RESISTOR,CHIP 10K 1/10W (1608)
R209	1-216-864-11	s	CONDUCTOR, CHIP (1608)
R210	1-216-864-11	s	CONDUCTOR, CHIP (1608)
R212	1-216-864-11	s	CONDUCTOR, CHIP (1608)
R213	1-216-864-11	s	CONDUCTOR, CHIP (1608)
R215	1-216-864-11	s	CONDUCTOR, CHIP (1608)

(DPR-229H BOARD [SUFFIX 14-])

Ref. No. or Q'ty	Part No.	SP	Description
R216	1-216-864-11	s	CONDUCTOR, CHIP (1608)
R217	1-216-864-11	s	CONDUCTOR, CHIP (1608)
R218	1-211-977-11	s	RESISTOR,CHIP 22 1/10W (1608)
R219	1-218-863-11	s	RESISTOR,CHIP 4.7K 1/10W(1608)
R220	1-216-864-11	s	CONDUCTOR, CHIP (1608)
R221	1-216-864-11	s	CONDUCTOR, CHIP (1608)
R222	1-218-863-11	s	RESISTOR,CHIP 4.7K 1/10W(1608)
R300	1-216-864-11	s	CONDUCTOR, CHIP (1608)
R301	1-216-864-11	s	CONDUCTOR, CHIP (1608)
R302	1-216-864-11	s	CONDUCTOR, CHIP (1608)
R303	1-218-863-11	s	RESISTOR,CHIP 4.7K 1/10W(1608)
R304	1-218-863-11	s	RESISTOR,CHIP 4.7K 1/10W(1608)
R305	1-218-863-11	s	RESISTOR,CHIP 4.7K 1/10W(1608)
R306	1-218-895-11	s	RESISTOR,CHIP 100K 1/10W(1608)
R307	1-218-863-11	s	RESISTOR,CHIP 4.7K 1/10W(1608)
R336	1-216-864-11	s	CONDUCTOR, CHIP (1608)
R349	1-216-864-11	s	CONDUCTOR, CHIP (1608)
R351	1-211-977-11	s	RESISTOR,CHIP 22 1/10W (1608)
R352	1-211-977-11	s	RESISTOR,CHIP 22 1/10W (1608)
R353	1-218-863-11	s	RESISTOR,CHIP 4.7K 1/10W(1608)
R354	1-218-863-11	s	RESISTOR,CHIP 4.7K 1/10W(1608)
R355	1-218-863-11	s	RESISTOR,CHIP 4.7K 1/10W(1608)
R357	1-218-895-11	s	RESISTOR,CHIP 100K 1/10W(1608)
R358	1-218-895-11	s	RESISTOR,CHIP 100K 1/10W(1608)
R359	1-211-977-11	s	RESISTOR,CHIP 22 1/10W (1608)
R428	1-218-823-11	s	RESISTOR,CHIP 100 1/10W (1608)
R429	1-218-823-11	s	RESISTOR,CHIP 100 1/10W (1608)
R430	1-218-823-11	s	RESISTOR,CHIP 100 1/10W (1608)
R431	1-218-823-11	s	RESISTOR,CHIP 100 1/10W (1608)
R432	1-211-977-11	s	RESISTOR,CHIP 22 1/10W (1608)
R433	1-211-977-11	s	RESISTOR,CHIP 22 1/10W (1608)
R434	1-211-977-11	s	RESISTOR,CHIP 22 1/10W (1608)
R441	1-216-864-11	s	CONDUCTOR, CHIP (1608)
R651	1-216-864-11	s	CONDUCTOR, CHIP (1608)
R672	1-218-871-11	s	RESISTOR,CHIP 10K 1/10W (1608)
R673	1-218-856-11	s	RESISTOR,CHIP 2.4K 1/10W(1608)
R674	1-218-871-11	s	RESISTOR,CHIP 10K 1/10W (1608)
R676	1-211-899-11	s	RESISTOR,CHIP 0.22 1/4W (3225)
R715	1-216-864-11	s	CONDUCTOR, CHIP (1608)
R716	1-216-864-11	s	CONDUCTOR, CHIP (1608)
R717	1-216-864-11	s	CONDUCTOR, CHIP (1608)
R718	1-216-864-11	s	CONDUCTOR, CHIP (1608)
R719	1-216-864-11	s	CONDUCTOR, CHIP (1608)
R720	1-216-864-11	s	CONDUCTOR, CHIP (1608)
R722	1-216-864-11	s	CONDUCTOR, CHIP (1608)
R723	1-216-864-11	s	CONDUCTOR, CHIP (1608)
R724	1-216-864-11	s	CONDUCTOR, CHIP (1608)
R725	1-216-864-11	s	CONDUCTOR, CHIP (1608)
R726	1-216-864-11	s	CONDUCTOR, CHIP (1608)
R727	1-216-864-11	s	CONDUCTOR, CHIP (1608)
R728	1-216-864-11	s	CONDUCTOR, CHIP (1608)
R729	1-216-864-11	s	CONDUCTOR, CHIP (1608)
R738	1-218-847-11	s	RESISTOR, CHIP 1K 1/10W (1608)
R739	1-218-847-11	s	RESISTOR, CHIP 1K 1/10W (1608)
R740	1-218-847-11	s	RESISTOR, CHIP 1K 1/10W (1608)
R748	1-216-864-11	s	CONDUCTOR, CHIP (1608)
R749	1-216-864-11	s	CONDUCTOR, CHIP (1608)
R750	1-216-864-11	s	CONDUCTOR, CHIP (1608)
R751	1-216-864-11	s	CONDUCTOR, CHIP (1608)

(DPR-229H BOARD [SUFFIX 14-])

Ref. No. or Q'ty	Part No.	SP	Description
R752	1-216-864-11	s	CONDUCTOR, CHIP (1608)
R753	1-216-864-11	s	CONDUCTOR, CHIP (1608)
R755	1-216-864-11	s	CONDUCTOR, CHIP (1608)
R756	1-216-864-11	s	CONDUCTOR, CHIP (1608)
R757	1-216-864-11	s	CONDUCTOR, CHIP (1608)
R758	1-216-864-11	s	CONDUCTOR, CHIP (1608)
R759	1-216-864-11	s	CONDUCTOR, CHIP (1608)
R760	1-216-864-11	s	CONDUCTOR, CHIP (1608)
R761	1-216-864-11	s	CONDUCTOR, CHIP (1608)
R762	1-216-864-11	s	CONDUCTOR, CHIP (1608)
R771	1-218-847-11	s	RESISTOR, CHIP 1K 1/10W (1608)
R772	1-218-847-11	s	RESISTOR, CHIP 1K 1/10W (1608)
R773	1-218-847-11	s	RESISTOR, CHIP 1K 1/10W (1608)
R796	1-216-864-11	s	CONDUCTOR, CHIP (1608)
R797	1-216-864-11	s	CONDUCTOR, CHIP (1608)
R811	1-216-864-11	s	CONDUCTOR, CHIP (1608)
R813	1-218-831-11	s	RESISTOR, CHIP 220 1/10W(1608)
R814	1-218-831-11	s	RESISTOR, CHIP 220 1/10W(1608)
R815	1-218-831-11	s	RESISTOR, CHIP 220 1/10W(1608)
R820	1-211-977-11	s	RESISTOR,CHIP 22 1/10W (1608)
R831	1-211-977-11	s	RESISTOR,CHIP 22 1/10W (1608)
R834	1-218-895-11	s	RESISTOR,CHIP 100K 1/10W(1608)
R835	1-218-895-11	s	RESISTOR,CHIP 100K 1/10W(1608)
R839	1-216-864-11	s	CONDUCTOR, CHIP (1608)
R841	1-211-977-11	s	RESISTOR,CHIP 22 1/10W (1608)
R851	1-216-864-11	s	CONDUCTOR, CHIP (1608)
R852	1-216-864-11	s	CONDUCTOR, CHIP (1608)
R854	1-211-977-11	s	RESISTOR,CHIP 22 1/10W (1608)
R856	1-211-977-11	s	RESISTOR,CHIP 22 1/10W (1608)
R863	1-218-871-11	s	RESISTOR,CHIP 10K 1/10W (1608)
R864	1-218-847-11	s	RESISTOR, CHIP 1K 1/10W (1608)
R865	1-218-847-11	s	RESISTOR, CHIP 1K 1/10W (1608)
R866	1-218-835-11	s	RESISTOR,CHIP 330 1/10W (1608)
R867	1-218-835-11	s	RESISTOR,CHIP 330 1/10W (1608)
R1037	1-216-864-11	s	CONDUCTOR, CHIP (1608)
R1038	1-216-864-11	s	CONDUCTOR, CHIP (1608)
R1039	1-216-864-11	s	CONDUCTOR, CHIP (1608)
R1040	1-216-864-11	s	CONDUCTOR, CHIP (1608)
R1052	1-218-895-11	s	RESISTOR,CHIP 100K 1/10W(1608)
R1053	1-218-895-11	s	RESISTOR,CHIP 100K 1/10W(1608)
R1054	1-216-864-11	s	CONDUCTOR, CHIP (1608)
RB100	1-233-810-21	s	RES, NETWORK 100K (3216)
RB101	1-233-810-21	s	RES, NETWORK 100K (3216)
RB102	1-239-409-11	s	RESISTOR NETWORK 47 (3216)
RB103	1-239-409-11	s	RESISTOR NETWORK 47 (3216)
RB104	1-233-810-21	s	RES, NETWORK 100K (3216)
RB106	1-234-397-11	s	NETWORK, RES (8 GANG) 100K
RB107	1-234-397-11	s	NETWORK, RES (8 GANG) 100K
RB108	1-233-575-11	s	RES, CHIP NETWORK 22
RB109	1-233-575-11	s	RES, CHIP NETWORK 22
RB110	1-233-575-11	s	RES, CHIP NETWORK 22
RB111	1-233-575-11	s	RES, CHIP NETWORK 22
RB112	1-233-575-11	s	RES, CHIP NETWORK 22
RB113	1-234-397-11	s	NETWORK, RES (8 GANG) 100K
RB114	1-233-576-11	s	RESISTOR,CHIP NETWORK 100
RB115	1-233-576-11	s	RESISTOR,CHIP NETWORK 100
RB116	1-233-810-21	s	RES, NETWORK 100K (3216)
RB117	1-234-397-11	s	NETWORK, RES (8 GANG) 100K

(DPR-229H BOARD [SUFFIX 14-])

Ref. No. or Q'ty	Part No.	SP	Description
RB118	1-234-397-11	s	NETWORK, RES (8 GANG) 100K
RB119	1-234-397-11	s	NETWORK, RES (8 GANG) 100K
RB120	1-234-397-11	s	NETWORK, RES (8 GANG) 100K
RB121	1-233-576-11	s	RESISTOR,CHIP NETWORK 100
RB122	1-233-576-11	s	RESISTOR,CHIP NETWORK 100
RB123	1-234-397-11	s	NETWORK, RES (8 GANG) 100K
RB200	1-233-411-11	s	RESISTOR,CHIP NETWORK 220/3216
RB201	1-233-411-11	s	RESISTOR,CHIP NETWORK 220/3216
RB202	1-233-411-11	s	RESISTOR,CHIP NETWORK 220/3216
RB203	1-233-411-11	s	RESISTOR,CHIP NETWORK 220/3216
RB204	1-233-411-11	s	RESISTOR,CHIP NETWORK 220/3216
RB205	1-233-575-11	s	RES, CHIP NETWORK 22
RB206	1-233-575-11	s	RES, CHIP NETWORK 22
RB213	1-239-409-11	s	RESISTOR NETWORK 47 (3216)
RB214	1-239-409-11	s	RESISTOR NETWORK 47 (3216)
RB215	1-239-409-11	s	RESISTOR NETWORK 47 (3216)
RB216	1-239-409-11	s	RESISTOR NETWORK 47 (3216)
RB217	1-239-409-11	s	RESISTOR NETWORK 47 (3216)
RB218	1-239-409-11	s	RESISTOR NETWORK 47 (3216)
RB300	1-233-810-21	s	RES, NETWORK 100K (3216)
RB700	1-233-810-21	s	RES, NETWORK 100K (3216)
RB701	1-233-810-21	s	RES, NETWORK 100K (3216)
RB702	1-233-810-21	s	RES, NETWORK 100K (3216)
RB703	1-233-810-21	s	RES, NETWORK 100K (3216)
RB704	1-233-810-21	s	RES, NETWORK 100K (3216)
RB705	1-233-810-21	s	RES, NETWORK 100K (3216)
RB706	1-233-810-21	s	RES, NETWORK 100K (3216)
RB707	1-233-810-21	s	RES, NETWORK 100K (3216)
RB708	1-233-810-21	s	RES, NETWORK 100K (3216)
RB709	1-234-397-11	s	NETWORK, RES (8 GANG) 100K
RB710	1-234-397-11	s	NETWORK, RES (8 GANG) 100K
RB801	1-233-810-21	s	RES, NETWORK 100K (3216)
RB804	1-233-411-11	s	RESISTOR,CHIP NETWORK 220/3216
RB805	1-233-411-11	s	RESISTOR,CHIP NETWORK 220/3216
RB806	1-233-411-11	s	RESISTOR,CHIP NETWORK 220/3216
RB807	1-233-414-11	s	RESISTOR,CHIP NETWORK 4.7K
RB811	1-239-409-11	s	RESISTOR NETWORK 47 (3216)
RB812	1-239-409-11	s	RESISTOR NETWORK 47 (3216)
RB813	1-233-810-21	s	RES, NETWORK 100K (3216)
RB814	1-233-810-21	s	RES, NETWORK 100K (3216)
RB815	1-233-810-21	s	RES, NETWORK 100K (3216)
RB816	1-233-810-21	s	RES, NETWORK 100K (3216)
RB817	1-233-414-11	s	RESISTOR,CHIP NETWORK 4.7K
RB818	1-236-908-11	s	RESISTOR,NETWORK 10K (3216)
RB819	1-233-810-21	s	RES, NETWORK 100K (3216)
X200	1-781-809-21	s	OSCILLATOR, CRYSTAL (SMD)

DPR-229HD BOARD [SUFFIX 13]

[Lot No. 4C2 - 554] [Board No. suffix 13] HDW-D2000

Ref. No. or Q'ty	Part No.	SP	Description
1pc	A-1090-695-A	s	MOUNTED CIRCUIT BOARD, DPR-229HD
1pc	3-179-084-11	s	LEVER (R), C BOARD
1pc	3-179-085-11	s	LEVER (L), C BOARD
C100	1-131-992-11	s	CAP, CERAMIC 100000PF F 1608
C101	1-131-992-11	s	CAP, CERAMIC 100000PF F 1608
C102	1-162-927-11	s	CAPACITOR,CERAMIC 100PF/50V CH
C103	1-126-394-11	s	CAPACITOR,ELECT 10MF/16V(CHIP)
C104	1-131-992-11	s	CAP, CERAMIC 100000PF F 1608
C105	1-131-992-11	s	CAP, CERAMIC 100000PF F 1608
C106	1-131-992-11	s	CAP, CERAMIC 100000PF F 1608
C107	1-131-992-11	s	CAP, CERAMIC 100000PF F 1608
C108	1-131-992-11	s	CAP, CERAMIC 100000PF F 1608
C109	1-131-992-11	s	CAP, CERAMIC 100000PF F 1608
C110	1-131-992-11	s	CAP, CERAMIC 100000PF F 1608
C111	1-131-992-11	s	CAP, CERAMIC 100000PF F 1608
C112	1-131-992-11	s	CAP, CERAMIC 100000PF F 1608
C113	1-131-992-11	s	CAP, CERAMIC 100000PF F 1608
C114	1-131-992-11	s	CAP, CERAMIC 100000PF F 1608
C115	1-131-992-11	s	CAP, CERAMIC 100000PF F 1608
C116	1-131-992-11	s	CAP, CERAMIC 100000PF F 1608
C117	1-131-992-11	s	CAP, CERAMIC 100000PF F 1608
C118	1-131-992-11	s	CAP, CERAMIC 100000PF F 1608
C119	1-131-992-11	s	CAP, CERAMIC 100000PF F 1608
C120	1-131-992-11	s	CAP, CERAMIC 100000PF F 1608
C121	1-131-992-11	s	CAP, CERAMIC 100000PF F 1608
C122	1-131-992-11	s	CAP, CERAMIC 100000PF F 1608
C123	1-131-992-11	s	CAP, CERAMIC 100000PF F 1608
C124	1-131-992-11	s	CAP, CERAMIC 100000PF F 1608
C125	1-131-992-11	s	CAP, CERAMIC 100000PF F 1608
C126	1-131-992-11	s	CAP, CERAMIC 100000PF F 1608
C127	1-131-992-11	s	CAP, CERAMIC 100000PF F 1608
C200	1-126-394-11	s	CAPACITOR,ELECT 10MF/16V(CHIP)
C201	1-131-992-11	s	CAP, CERAMIC 100000PF F 1608
C202	1-131-992-11	s	CAP, CERAMIC 100000PF F 1608
C203	1-131-992-11	s	CAP, CERAMIC 100000PF F 1608
C204	1-126-394-11	s	CAPACITOR,ELECT 10MF/16V(CHIP)
C205	1-131-992-11	s	CAP, CERAMIC 100000PF F 1608
C206	1-131-992-11	s	CAP, CERAMIC 100000PF F 1608
C207	1-126-394-11	s	CAPACITOR,ELECT 10MF/16V(CHIP)
C208	1-131-992-11	s	CAP, CERAMIC 100000PF F 1608
C209	1-131-992-11	s	CAP, CERAMIC 100000PF F 1608
C210	1-131-992-11	s	CAP, CERAMIC 100000PF F 1608
C211	1-127-692-11	s	CAP, CHIP CERAMIC 10MF B 3216
C212	1-127-692-11	s	CAP, CHIP CERAMIC 10MF B 3216
C213	1-131-992-11	s	CAP, CERAMIC 100000PF F 1608
C214	1-131-992-11	s	CAP, CERAMIC 100000PF F 1608
C215	1-131-992-11	s	CAP, CERAMIC 100000PF F 1608
C216	1-131-992-11	s	CAP, CERAMIC 100000PF F 1608
C217	1-131-992-11	s	CAP, CERAMIC 100000PF F 1608
C218	1-131-992-11	s	CAP, CERAMIC 100000PF F 1608
C219	1-131-992-11	s	CAP, CERAMIC 100000PF F 1608
C220	1-131-992-11	s	CAP, CERAMIC 100000PF F 1608
C221	1-131-992-11	s	CAP, CERAMIC 100000PF F 1608
C222	1-131-992-11	s	CAP, CERAMIC 100000PF F 1608
C223	1-131-992-11	s	CAP, CERAMIC 100000PF F 1608
C224	1-131-992-11	s	CAP, CERAMIC 100000PF F 1608
C225	1-131-992-11	s	CAP, CERAMIC 100000PF F 1608

(DPR-229HD BOARD [SUFFIX 13])

Ref. No. or Q'ty	Part No.	SP	Description
C226	1-131-992-11	s	CAP, CERAMIC 100000PF F 1608
C227	1-131-992-11	s	CAP, CERAMIC 100000PF F 1608
C228	1-131-992-11	s	CAP, CERAMIC 100000PF F 1608
C230	1-126-394-11	s	CAPACITOR,ELECT 10MF/16V(CHIP)
C231	1-131-992-11	s	CAP, CERAMIC 100000PF F 1608
C232	1-131-992-11	s	CAP, CERAMIC 100000PF F 1608
C233	1-131-992-11	s	CAP, CERAMIC 100000PF F 1608
C234	1-131-992-11	s	CAP, CERAMIC 100000PF F 1608
C235	1-131-992-11	s	CAP, CERAMIC 100000PF F 1608
C300	1-131-992-11	s	CAP, CERAMIC 100000PF F 1608
C301	1-131-992-11	s	CAP, CERAMIC 100000PF F 1608
C302	1-131-992-11	s	CAP, CERAMIC 100000PF F 1608
C303	1-131-992-11	s	CAP, CERAMIC 100000PF F 1608
C304	1-126-394-11	s	CAPACITOR,ELECT 10MF/16V(CHIP)
C315	1-131-992-11	s	CAP, CERAMIC 100000PF F 1608
C316	1-131-992-11	s	CAP, CERAMIC 100000PF F 1608
C329	1-131-992-11	s	CAP, CERAMIC 100000PF F 1608
C330	1-131-992-11	s	CAP, CERAMIC 100000PF F 1608
C331	1-126-394-11	s	CAPACITOR,ELECT 10MF/16V(CHIP)
C332	1-131-992-11	s	CAP, CERAMIC 100000PF F 1608
C333	1-131-992-11	s	CAP, CERAMIC 100000PF F 1608
C334	1-131-992-11	s	CAP, CERAMIC 100000PF F 1608
C335	1-131-992-11	s	CAP, CERAMIC 100000PF F 1608
C336	1-131-992-11	s	CAP, CERAMIC 100000PF F 1608
C337	1-131-992-11	s	CAP, CERAMIC 100000PF F 1608
C338	1-131-992-11	s	CAP, CERAMIC 100000PF F 1608
C339	1-131-992-11	s	CAP, CERAMIC 100000PF F 1608
C404	1-131-992-11	s	CAP, CERAMIC 100000PF F 1608
C412	1-126-394-11	s	CAPACITOR,ELECT 10MF/16V(CHIP)
C413	1-131-992-11	s	CAP, CERAMIC 100000PF F 1608
C418	1-126-394-11	s	CAPACITOR,ELECT 10MF/16V(CHIP)
C419	1-131-992-11	s	CAP, CERAMIC 100000PF F 1608
C420	1-131-992-11	s	CAP, CERAMIC 100000PF F 1608
C421	1-131-992-11	s	CAP, CERAMIC 100000PF F 1608
C422	1-131-992-11	s	CAP, CERAMIC 100000PF F 1608
C423	1-131-992-11	s	CAP, CERAMIC 100000PF F 1608
C424	1-131-992-11	s	CAP, CERAMIC 100000PF F 1608
C425	1-131-992-11	s	CAP, CERAMIC 100000PF F 1608
C426	1-131-992-11	s	CAP, CERAMIC 100000PF F 1608
C427	1-131-992-11	s	CAP, CERAMIC 100000PF F 1608
C428	1-131-992-11	s	CAP, CERAMIC 100000PF F 1608
C429	1-131-992-11	s	CAP, CERAMIC 100000PF F 1608
C430	1-131-992-11	s	CAP, CERAMIC 100000PF F 1608
C431	1-131-992-11	s	CAP, CERAMIC 100000PF F 1608
C432	1-131-992-11	s	CAP, CERAMIC 100000PF F 1608
C433	1-126-394-11	s	CAPACITOR,ELECT 10MF/16V(CHIP)
C440	1-131-992-11	s	CAP, CERAMIC 100000PF F 1608
C500	1-131-992-11	s	CAP, CERAMIC 100000PF F 1608
C501	1-131-992-11	s	CAP, CERAMIC 100000PF F 1608
C502	1-131-992-11	s	CAP, CERAMIC 100000PF F 1608
C503	1-131-992-11	s	CAP, CERAMIC 100000PF F 1608
C504	1-131-992-11	s	CAP, CERAMIC 100000PF F 1608
C505	1-131-992-11	s	CAP, CERAMIC 100000PF F 1608
C506	1-131-992-11	s	CAP, CERAMIC 100000PF F 1608
C507	1-131-992-11	s	CAP, CERAMIC 100000PF F 1608
C508	1-131-992-11	s	CAP, CERAMIC 100000PF F 1608
C509	1-131-992-11	s	CAP, CERAMIC 100000PF F 1608
C510	1-131-992-11	s	CAP, CERAMIC 100000PF F 1608
C511	1-131-992-11	s	CAP, CERAMIC 100000PF F 1608

(DPR-229HD BOARD [SUFFIX 13])

Ref. No. or Q'ty	Part No.	SP	Description
C512	1-131-992-11	s	CAP, CERAMIC 100000PF F 1608
C513	1-131-992-11	s	CAP, CERAMIC 100000PF F 1608
C514	1-131-992-11	s	CAP, CERAMIC 100000PF F 1608
C515	1-131-992-11	s	CAP, CERAMIC 100000PF F 1608
C516	1-131-992-11	s	CAP, CERAMIC 100000PF F 1608
C517	1-131-992-11	s	CAP, CERAMIC 100000PF F 1608
C518	1-131-992-11	s	CAP, CERAMIC 100000PF F 1608
C519	1-131-992-11	s	CAP, CERAMIC 100000PF F 1608
C520	1-131-992-11	s	CAP, CERAMIC 100000PF F 1608
C521	1-131-992-11	s	CAP, CERAMIC 100000PF F 1608
C522	1-131-992-11	s	CAP, CERAMIC 100000PF F 1608
C523	1-126-394-11	s	CAPACITOR,ELECT 10MF/16V(CHIP)
C524	1-131-992-11	s	CAP, CERAMIC 100000PF F 1608
C525	1-131-992-11	s	CAP, CERAMIC 100000PF F 1608
C526	1-162-922-11	s	CAPACITOR,CERAMIC 39PF/50V CH
C527	1-131-992-11	s	CAP, CERAMIC 100000PF F 1608
C528	1-131-992-11	s	CAP, CERAMIC 100000PF F 1608
C529	1-131-992-11	s	CAP, CERAMIC 100000PF F 1608
C530	1-131-992-11	s	CAP, CERAMIC 100000PF F 1608
C531	1-131-992-11	s	CAP, CERAMIC 100000PF F 1608
C532	1-131-992-11	s	CAP, CERAMIC 100000PF F 1608
C533	1-131-992-11	s	CAP, CERAMIC 100000PF F 1608
C534	1-131-992-11	s	CAP, CERAMIC 100000PF F 1608
C535	1-131-992-11	s	CAP, CERAMIC 100000PF F 1608
C536	1-131-992-11	s	CAP, CERAMIC 100000PF F 1608
C537	1-131-992-11	s	CAP, CERAMIC 100000PF F 1608
C538	1-131-992-11	s	CAP, CERAMIC 100000PF F 1608
C539	1-131-992-11	s	CAP, CERAMIC 100000PF F 1608
C540	1-131-992-11	s	CAP, CERAMIC 100000PF F 1608
C541	1-131-992-11	s	CAP, CERAMIC 100000PF F 1608
C542	1-131-992-11	s	CAP, CERAMIC 100000PF F 1608
C543	1-131-992-11	s	CAP, CERAMIC 100000PF F 1608
C544	1-131-992-11	s	CAP, CERAMIC 100000PF F 1608
C545	1-131-992-11	s	CAP, CERAMIC 100000PF F 1608
C546	1-131-992-11	s	CAP, CERAMIC 100000PF F 1608
C547	1-131-992-11	s	CAP, CERAMIC 100000PF F 1608
C548	1-131-992-11	s	CAP, CERAMIC 100000PF F 1608
C549	1-131-992-11	s	CAP, CERAMIC 100000PF F 1608
C550	1-131-992-11	s	CAP, CERAMIC 100000PF F 1608
C551	1-131-992-11	s	CAP, CERAMIC 100000PF F 1608
C552	1-131-992-11	s	CAP, CERAMIC 100000PF F 1608
C606	1-131-992-11	s	CAP, CERAMIC 100000PF F 1608
C607	1-126-394-11	s	CAPACITOR,ELECT 10MF/16V(CHIP)
C608	1-131-992-11	s	CAP, CERAMIC 100000PF F 1608
C609	1-131-992-11	s	CAP, CERAMIC 100000PF F 1608
C650	1-162-970-11	s	CAPACITOR CERAMIC 0.01MF/25V B
C651	1-162-970-11	s	CAPACITOR CERAMIC 0.01MF/25V B
C652	1-131-992-11	s	CAP, CERAMIC 100000PF F 1608
C653	1-131-992-11	s	CAP, CERAMIC 100000PF F 1608
C654	1-126-394-11	s	CAPACITOR,ELECT 10MF/16V(CHIP)
C655	1-131-992-11	s	CAP, CERAMIC 100000PF F 1608
C656	1-131-992-11	s	CAP, CERAMIC 100000PF F 1608
C657	1-131-992-11	s	CAP, CERAMIC 100000PF F 1608
C658	1-131-992-11	s	CAP, CERAMIC 100000PF F 1608
C659	1-131-992-11	s	CAP, CERAMIC 100000PF F 1608
C660	1-131-992-11	s	CAP, CERAMIC 100000PF F 1608
C661	1-131-992-11	s	CAP, CERAMIC 100000PF F 1608
C662	1-131-992-11	s	CAP, CERAMIC 100000PF F 1608
C663	1-126-394-11	s	CAPACITOR,ELECT 10MF/16V(CHIP)

(DPR-229HD BOARD [SUFFIX 13])

Ref. No. or Q'ty	Part No.	SP	Description
C664	1-165-870-21	s	CAPACITOR, ELECT 100MF(6.3X6)
C665	1-126-394-11	s	CAPACITOR,ELECT 10MF/16V(CHIP)
C666	1-131-992-11	s	CAP, CERAMIC 100000PF F 1608
C667	1-131-992-11	s	CAP, CERAMIC 100000PF F 1608
C668	1-131-992-11	s	CAP, CERAMIC 100000PF F 1608
C669	1-131-992-11	s	CAP, CERAMIC 100000PF F 1608
C670	1-131-992-11	s	CAP, CERAMIC 100000PF F 1608
C671	1-131-992-11	s	CAP, CERAMIC 100000PF F 1608
C672	1-131-992-11	s	CAP, CERAMIC 100000PF F 1608
C673	1-131-992-11	s	CAP, CERAMIC 100000PF F 1608
C674	1-131-992-11	s	CAP, CERAMIC 100000PF F 1608
C675	1-131-992-11	s	CAP, CERAMIC 100000PF F 1608
C676	1-131-992-11	s	CAP, CERAMIC 100000PF F 1608
C677	1-131-992-11	s	CAP, CERAMIC 100000PF F 1608
C678	1-131-992-11	s	CAP, CERAMIC 100000PF F 1608
C679	1-131-992-11	s	CAP, CERAMIC 100000PF F 1608
C680	1-131-992-11	s	CAP, CERAMIC 100000PF F 1608
C681	1-131-992-11	s	CAP, CERAMIC 100000PF F 1608
C682	1-131-992-11	s	CAP, CERAMIC 100000PF F 1608
C683	1-131-992-11	s	CAP, CERAMIC 100000PF F 1608
C684	1-131-992-11	s	CAP, CERAMIC 100000PF F 1608
C685	1-162-925-11	s	CAPACITOR,CERAMIC 68PF/50V CH
C686	1-165-872-21	s	CAPACITOR,SOLID ELECT 47MF
C687	1-126-394-11	s	CAPACITOR,ELECT 10MF/16V(CHIP)
C688	1-126-394-11	s	CAPACITOR,ELECT 10MF/16V(CHIP)
C689	1-131-992-11	s	CAP, CERAMIC 100000PF F 1608
C690	1-131-992-11	s	CAP, CERAMIC 100000PF F 1608
C700	1-131-992-11	s	CAP, CERAMIC 100000PF F 1608
C701	1-113-503-11	s	CAPACITOR,CERAMIC 3900PF CH
C702	1-162-968-11	s	CAPACITOR,CERAMIC 4700PF/50V B
C703	1-131-992-11	s	CAP, CERAMIC 100000PF F 1608
C704	1-131-992-11	s	CAP, CERAMIC 100000PF F 1608
C705	1-131-992-11	s	CAP, CERAMIC 100000PF F 1608
C706	1-131-992-11	s	CAP, CERAMIC 100000PF F 1608
C707	1-131-992-11	s	CAP, CERAMIC 100000PF F 1608
C708	1-131-992-11	s	CAP, CERAMIC 100000PF F 1608
C709	1-131-992-11	s	CAP, CERAMIC 100000PF F 1608
C710	1-131-992-11	s	CAP, CERAMIC 100000PF F 1608
C711	1-131-992-11	s	CAP, CERAMIC 100000PF F 1608
C712	1-131-992-11	s	CAP, CERAMIC 100000PF F 1608
C713	1-113-503-11	s	CAPACITOR,CERAMIC 3900PF CH
C714	1-162-968-11	s	CAPACITOR,CERAMIC 4700PF/50V B
C715	1-131-992-11	s	CAP, CERAMIC 100000PF F 1608
C716	1-131-992-11	s	CAP, CERAMIC 100000PF F 1608
C717	1-131-992-11	s	CAP, CERAMIC 100000PF F 1608
C718	1-131-992-11	s	CAP, CERAMIC 100000PF F 1608
C719	1-131-992-11	s	CAP, CERAMIC 100000PF F 1608
C720	1-131-992-11	s	CAP, CERAMIC 100000PF F 1608
C721	1-131-992-11	s	CAP, CERAMIC 100000PF F 1608
C722	1-131-992-11	s	CAP, CERAMIC 100000PF F 1608
C723	1-131-992-11	s	CAP, CERAMIC 100000PF F 1608
C724	1-131-992-11	s	CAP, CERAMIC 100000PF F 1608
C725	1-113-503-11	s	CAPACITOR,CERAMIC 3900PF CH
C726	1-162-968-11	s	CAPACITOR,CERAMIC 4700PF/50V B
C727	1-131-992-11	s	CAP, CERAMIC 100000PF F 1608
C728	1-131-992-11	s	CAP, CERAMIC 100000PF F 1608
C729	1-131-992-11	s	CAP, CERAMIC 100000PF F 1608
C730	1-131-992-11	s	CAP, CERAMIC 100000PF F 1608
C731	1-131-992-11	s	CAP, CERAMIC 100000PF F 1608

(DPR-229HD BOARD [SUFFIX 13])

Ref. No. or Q'ty	Part No.	SP	Description
C732	1-131-992-11	s	CAP, CERAMIC 100000PF F 1608
C733	1-131-992-11	s	CAP, CERAMIC 100000PF F 1608
C734	1-131-992-11	s	CAP, CERAMIC 100000PF F 1608
C735	1-131-992-11	s	CAP, CERAMIC 100000PF F 1608
C736	1-131-992-11	s	CAP, CERAMIC 100000PF F 1608
C737	1-113-503-11	s	CAPACITOR,CERAMIC 3900PF CH
C738	1-162-968-11	s	CAPACITOR,CERAMIC 4700PF/50V B
C739	1-131-992-11	s	CAP, CERAMIC 100000PF F 1608
C740	1-131-992-11	s	CAP, CERAMIC 100000PF F 1608
C741	1-131-992-11	s	CAP, CERAMIC 100000PF F 1608
C742	1-131-992-11	s	CAP, CERAMIC 100000PF F 1608
C743	1-131-992-11	s	CAP, CERAMIC 100000PF F 1608
C744	1-131-992-11	s	CAP, CERAMIC 100000PF F 1608
C745	1-131-992-11	s	CAP, CERAMIC 100000PF F 1608
C746	1-131-992-11	s	CAP, CERAMIC 100000PF F 1608
C747	1-131-992-11	s	CAP, CERAMIC 100000PF F 1608
C748	1-131-992-11	s	CAP, CERAMIC 100000PF F 1608
C800	1-126-394-11	s	CAPACITOR,ELECT 10MF/16V(CHIP)
C801	1-131-992-11	s	CAP, CERAMIC 100000PF F 1608
C802	1-131-992-11	s	CAP, CERAMIC 100000PF F 1608
C803	1-131-992-11	s	CAP, CERAMIC 100000PF F 1608
C804	1-131-992-11	s	CAP, CERAMIC 100000PF F 1608
C810	1-131-992-11	s	CAP, CERAMIC 100000PF F 1608
C811	1-131-992-11	s	CAP, CERAMIC 100000PF F 1608
C812	1-128-590-11	s	CAPACITOR ELECT 100MF/6.3V(105
C813	1-128-590-11	s	CAPACITOR ELECT 100MF/6.3V(105
C814	1-131-992-11	s	CAP, CERAMIC 100000PF F 1608
C815	1-131-992-11	s	CAP, CERAMIC 100000PF F 1608
C816	1-131-992-11	s	CAP, CERAMIC 100000PF F 1608
C817	1-131-992-11	s	CAP, CERAMIC 100000PF F 1608
C818	1-131-992-11	s	CAP, CERAMIC 100000PF F 1608
C819	1-128-590-11	s	CAPACITOR ELECT 100MF/6.3V(105
C820	1-128-590-11	s	CAPACITOR ELECT 100MF/6.3V(105
C821	1-128-590-11	s	CAPACITOR ELECT 100MF/6.3V(105
C822	1-128-590-11	s	CAPACITOR ELECT 100MF/6.3V(105
C823	1-131-992-11	s	CAP, CERAMIC 100000PF F 1608
C827	1-131-992-11	s	CAP, CERAMIC 100000PF F 1608
C829	1-131-992-11	s	CAP, CERAMIC 100000PF F 1608
C831	1-131-992-11	s	CAP, CERAMIC 100000PF F 1608
C832	1-131-992-11	s	CAP, CERAMIC 100000PF F 1608
C833	1-131-992-11	s	CAP, CERAMIC 100000PF F 1608
C834	1-131-992-11	s	CAP, CERAMIC 100000PF F 1608
C835	1-131-992-11	s	CAP, CERAMIC 100000PF F 1608
C837	1-131-992-11	s	CAP, CERAMIC 100000PF F 1608
C838	1-131-992-11	s	CAP, CERAMIC 100000PF F 1608
C839	1-126-394-11	s	CAPACITOR,ELECT 10MF/16V(CHIP)
C842	1-131-992-11	s	CAP, CERAMIC 100000PF F 1608
C843	1-131-992-11	s	CAP, CERAMIC 100000PF F 1608
C844	1-131-992-11	s	CAP, CERAMIC 100000PF F 1608
C845	1-131-992-11	s	CAP, CERAMIC 100000PF F 1608
C846	1-131-992-11	s	CAP, CERAMIC 100000PF F 1608
C847	1-131-992-11	s	CAP, CERAMIC 100000PF F 1608
C848	1-126-394-11	s	CAPACITOR,ELECT 10MF/16V(CHIP)
C849	1-126-394-11	s	CAPACITOR,ELECT 10MF/16V(CHIP)
C850	1-131-992-11	s	CAP, CERAMIC 100000PF F 1608
C851	1-131-992-11	s	CAP, CERAMIC 100000PF F 1608
C852	1-131-992-11	s	CAP, CERAMIC 100000PF F 1608
C853	1-126-394-11	s	CAPACITOR,ELECT 10MF/16V(CHIP)
C862	1-131-992-11	s	CAP, CERAMIC 100000PF F 1608

(DPR-229HD BOARD [SUFFIX 13])

Ref. No. or Q'ty	Part No.	SP	Description
C864	1-131-992-11	s	CAP, CERAMIC 100000PF F 1608
C865	1-131-992-11	s	CAP, CERAMIC 100000PF F 1608
C867	1-127-861-11	s	CAP, CERAMIC 2.2MF B (3216)
C868	1-127-861-11	s	CAP, CERAMIC 2.2MF B (3216)
C869	1-131-992-11	s	CAP, CERAMIC 100000PF F 1608
CN16	1-580-789-91	s	PIN, CONNECTOR 6P
E100	1-535-877-22	s	CHIP,CHECKER (TEST POINT)
E200	1-535-877-22	s	CHIP,CHECKER (TEST POINT)
E300	1-535-877-22	s	CHIP,CHECKER (TEST POINT)
E400	1-535-877-22	s	CHIP,CHECKER (TEST POINT)
E401	1-535-877-22	s	CHIP,CHECKER (TEST POINT)
E500	1-535-877-22	s	CHIP,CHECKER (TEST POINT)
E600	1-535-877-22	s	CHIP,CHECKER (TEST POINT)
E700	1-535-877-22	s	CHIP,CHECKER (TEST POINT)
E800	1-535-877-22	s	CHIP,CHECKER (TEST POINT)
F800	⚠ 1-576-270-21	s	FUSE (SMD)
F802	⚠ 1-576-270-21	s	FUSE (SMD)
F803	⚠ 1-576-270-21	s	FUSE (SMD)
FB200	1-469-094-11	s	FERRITE, EMI (SMD)
FL200	1-239-898-22	s	FILTER, EMI (SMD)
FL600	1-233-674-21	s	FILTER, EMI
FL601	1-233-674-21	s	FILTER, EMI
IC100	8-759-549-15	s	IC SN74LV245APWR
IC101	8-759-549-15	s	IC SN74LV245APWR
IC102	8-759-523-84	s	IC TC74VHC14FT (EL)
IC103	8-759-491-46	s	IC TC74VHCT04AFT (EL)
IC104	8-759-491-46	s	IC TC74VHCT04AFT (EL)
IC105	8-759-523-94	s	IC TC74VHC32FT(EL)
IC106	8-759-549-01	s	IC SN74LV125APWR
IC107	8-759-392-77	s	IC SN74LVC245APW (E20)
IC108	8-759-549-15	s	IC SN74LV245APWR
IC109	8-759-524-07	s	IC TC74VHC138FT(EL)
IC110	8-759-549-15	s	IC SN74LV245APWR
IC111	8-759-491-46	s	IC TC74VHCT04AFT (EL)
IC112	8-759-549-15	s	IC SN74LV245APWR
IC113	8-759-549-15	s	IC SN74LV245APWR
IC114	8-759-549-15	s	IC SN74LV245APWR
IC115	8-759-549-15	s	IC SN74LV245APWR
IC116	8-759-549-15	s	IC SN74LV245APWR
IC117	8-759-549-15	s	IC SN74LV245APWR
IC118	8-759-524-07	s	IC TC74VHC138FT(EL)
IC119	8-759-524-07	s	IC TC74VHC138FT(EL)
IC120	8-759-523-81	s	IC TC74VHC08FT(EL)
IC121	6-706-487-01	s	IC TC7SH08FU(T5RSOYJF)
IC122	8-759-523-92	s	IC TC74VHC21FT(EL)
IC123	8-759-549-15	s	IC SN74LV245APWR
IC124	8-752-392-03	s	IC CXD1095BR
IC125	6-706-487-01	s	IC TC7SH08FU(T5RSOYJF)
IC126	6-706-482-01	s	IC TC7SH00FU(T5RSOYJF)
IC200	8-759-475-55	s	IC TC74LCX574FT(EL)
IC201	8-759-475-55	s	IC TC74LCX574FT(EL)
IC202	8-759-475-55	s	IC TC74LCX574FT(EL)
IC203	8-759-669-41	s	IC SN74LVC125APWR-12
IC204	6-706-484-01	s	IC TC7SH04FU(T5RSOYJF)
IC205	8-759-669-41	s	IC SN74LVC125APWR-12
IC208	8-759-392-77	s	IC SN74LVC245APW (E20)
IC209	8-759-392-77	s	IC SN74LVC245APW (E20)

(DPR-229HD BOARD [SUFFIX 13])

Ref. No. or Q'ty	Part No.	SP	Description
IC210	8-759-392-77	s	IC SN74LVC245APW (E20)
IC212	8-759-712-32	s	IC SN65LVDS389DBTR
IC213	8-759-712-32	s	IC SN65LVDS389DBTR
IC214	8-759-712-32	s	IC SN65LVDS389DBTR
IC217	6-706-484-01	s	IC TC7SH04FU(T5RSOYJF)
IC302	8-759-524-10	s	IC TC74VHC157FT (EL)
IC303	8-759-524-10	s	IC TC74VHC157FT (EL)
IC310	8-759-392-77	s	IC SN74LVC245APW (E20)
IC311	8-759-392-77	s	IC SN74LVC245APW (E20)
IC401	8-759-669-41	s	IC SN74LVC125APWR-12
IC407	8-759-656-31	o	IC CXD9094AR
IC413	8-759-639-86	s	IC SN65LVDS32DR
IC500	8-759-199-86	s	IC CXD8807BR
IC501	8-759-549-15	s	IC SN74LV245APWR
IC502	8-759-549-15	s	IC SN74LV245APWR
IC506	8-752-373-24	s	IC CXK48324R-1-T6
IC507	8-752-373-24	s	IC CXK48324R-1-T6
IC508	8-752-373-24	s	IC CXK48324R-1-T6
IC509	8-752-373-24	s	IC CXK48324R-1-T6
IC510	8-752-373-24	s	IC CXK48324R-1-T6
IC601	8-759-524-09	s	IC TC74VHC153FT (EL)
IC602	8-759-475-55	s	IC TC74LCX574FT(EL)
IC603	8-759-475-55	s	IC TC74LCX574FT(EL)
IC653	8-759-549-15	s	IC SN74LV245APWR
IC654	8-759-549-15	s	IC SN74LV245APWR
IC655	8-759-664-03	s	IC LP3964EMPX-ADJ
IC700	8-752-392-03	s	IC CXD1095BR
IC701	6-702-254-01	s	IC DSPB56362PV100-1J21D
IC702	8-759-543-83	s	IC KM416V1204CT-L6
IC703	8-759-543-83	s	IC KM416V1204CT-L6
IC704	6-702-254-01	s	IC DSPB56362PV100-1J21D
IC705	8-759-543-83	s	IC KM416V1204CT-L6
IC706	8-759-543-83	s	IC KM416V1204CT-L6
IC707	6-702-254-01	s	IC DSPB56362PV100-1J21D
IC708	8-759-543-83	s	IC KM416V1204CT-L6
IC709	8-759-543-83	s	IC KM416V1204CT-L6
IC710	6-702-254-01	s	IC DSPB56362PV100-1J21D
IC711	8-759-543-83	s	IC KM416V1204CT-L6
IC712	8-759-543-83	s	IC KM416V1204CT-L6
IC801	8-759-549-15	s	IC SN74LV245APWR
IC802	6-706-487-01	s	IC TC7SH08FU(T5RSOYJF)
IC803	8-759-491-46	s	IC TC74VHCT04AFT (EL)
IC804	8-759-669-41	s	IC SN74LVC125APWR-12
IC805	8-759-475-43	s	IC TC74LCX125FT(EL)
IC808	8-759-549-15	s	IC SN74LV245APWR
IC809	8-759-523-78	s	IC TC74VHC00FT(EL)
IC810	8-759-392-77	s	IC SN74LVC245APW (E20)
IC812	8-759-669-41	s	IC SN74LVC125APWR-12
IC813	8-759-669-41	s	IC SN74LVC125APWR-12
IC814	8-759-669-41	s	IC SN74LVC125APWR-12
IC815	8-759-475-43	s	IC TC74LCX125FT(EL)
IC817	8-759-549-01	s	IC SN74LV125APWR
IC818	8-759-549-15	s	IC SN74LV245APWR
IC819	8-759-524-10	s	IC TC74VHC157FT (EL)
IC822	8-759-549-01	s	IC SN74LV125APWR
IC823	8-759-549-15	s	IC SN74LV245APWR
IC824	8-759-549-15	s	IC SN74LV245APWR
IC825	8-759-549-15	s	IC SN74LV245APWR
IC826	8-759-549-01	s	IC SN74LV125APWR

(DPR-229HD BOARD [SUFFIX 13])

Ref. No. or Q'ty	Part No.	SP	Description
IC827	6-704-723-01	s	IC XCS20XL-4VQG100C
IC829	8-759-524-10	s	IC TC74VHC157FT (EL)
IC831	8-759-524-27	s	IC TC74VHC244FT(EL)
IC832	6-706-484-01	s	IC TC7SH04FU(T5RSOYJF)
IC833	6-803-242-02	s	IC XC18V02-DPR229IMX-V4.00
L100	1-412-056-11	s	INDUCTOR 4.7UH (3225)
L101	1-412-056-11	s	INDUCTOR 4.7UH (3225)
L102	1-412-056-11	s	INDUCTOR 4.7UH (3225)
L103	1-412-056-11	s	INDUCTOR 4.7UH (3225)
L200	1-412-056-11	s	INDUCTOR 4.7UH (3225)
L201	1-412-056-11	s	INDUCTOR 4.7UH (3225)
L202	1-412-056-11	s	INDUCTOR 4.7UH (3225)
L402	1-412-056-11	s	INDUCTOR 4.7UH (3225)
L600	1-412-056-11	s	INDUCTOR 4.7UH (3225)
L651	1-412-056-11	s	INDUCTOR 4.7UH (3225)
L800	1-419-630-11	s	COIL, CHOKE 4.7UH
L801	1-419-630-11	s	COIL, CHOKE 4.7UH
L802	1-419-630-11	s	COIL, CHOKE 4.7UH
L803	1-419-630-11	s	COIL, CHOKE 4.7UH
L804	1-412-056-11	s	INDUCTOR 4.7UH (3225)
L806	1-412-056-11	s	INDUCTOR 4.7UH (3225)
L807	1-412-056-11	s	INDUCTOR 4.7UH (3225)
L808	1-412-056-11	s	INDUCTOR 4.7UH (3225)
Q200	8-729-928-81	s	TRANSISTOR DTC144EE
Q800	8-729-928-81	s	TRANSISTOR DTC144EE
Q801	8-729-045-53	s	TRANSISTOR SI4431DY-T1
Q802	8-729-140-63	s	TRANSISTOR 2SA1611-M5M6
R100	1-218-895-11	s	RESISTOR,CHIP 100K 1/10W(1608)
R101	1-218-895-11	s	RESISTOR,CHIP 100K 1/10W(1608)
R102	1-218-895-11	s	RESISTOR,CHIP 100K 1/10W(1608)
R103	1-218-895-11	s	RESISTOR,CHIP 100K 1/10W(1608)
R105	1-218-895-11	s	RESISTOR,CHIP 100K 1/10W(1608)
R106	1-211-985-11	s	RESISTOR,CHIP 47 1/10W (1608)
R107	1-211-985-11	s	RESISTOR,CHIP 47 1/10W (1608)
R108	1-211-985-11	s	RESISTOR,CHIP 47 1/10W (1608)
R109	1-211-985-11	s	RESISTOR,CHIP 47 1/10W (1608)
R110	1-218-895-11	s	RESISTOR,CHIP 100K 1/10W(1608)
R111	1-218-823-11	s	RESISTOR,CHIP 100 1/10W (1608)
R117	1-218-863-11	s	RESISTOR,CHIP 4.7K 1/10W(1608)
R118	1-218-863-11	s	RESISTOR,CHIP 4.7K 1/10W(1608)
R122	1-218-863-11	s	RESISTOR,CHIP 4.7K 1/10W(1608)
R124	1-218-863-11	s	RESISTOR,CHIP 4.7K 1/10W(1608)
R125	1-218-863-11	s	RESISTOR,CHIP 4.7K 1/10W(1608)
R130	1-216-864-11	s	CONDUCTOR, CHIP (1608)
R131	1-216-864-11	s	CONDUCTOR, CHIP (1608)
R132	1-216-864-11	s	CONDUCTOR, CHIP (1608)
R133	1-216-864-11	s	CONDUCTOR, CHIP (1608)
R134	1-218-863-11	s	RESISTOR,CHIP 4.7K 1/10W(1608)
R136	1-211-977-11	s	RESISTOR,CHIP 22 1/10W (1608)
R138	1-218-895-11	s	RESISTOR,CHIP 100K 1/10W(1608)
R139	1-218-895-11	s	RESISTOR,CHIP 100K 1/10W(1608)
R141	1-216-864-11	s	CONDUCTOR, CHIP (1608)
R143	1-218-895-11	s	RESISTOR,CHIP 100K 1/10W(1608)
R144	1-211-977-11	s	RESISTOR,CHIP 22 1/10W (1608)
R200	1-218-831-11	s	RESISTOR, CHIP 220 1/10W(1608)
R202	1-216-864-11	s	CONDUCTOR, CHIP (1608)
R203	1-211-985-11	s	RESISTOR,CHIP 47 1/10W (1608)
R204	1-211-977-11	s	RESISTOR,CHIP 22 1/10W (1608)

(DPR-229HD BOARD [SUFFIX 13])

Ref. No. or Q'ty	Part No.	SP	Description
R207	1-216-864-11	s	CONDUCTOR, CHIP (1608)
R208	1-218-871-11	s	RESISTOR,CHIP 10K 1/10W (1608)
R209	1-216-864-11	s	CONDUCTOR, CHIP (1608)
R210	1-216-864-11	s	CONDUCTOR, CHIP (1608)
R212	1-216-864-11	s	CONDUCTOR, CHIP (1608)
R213	1-216-864-11	s	CONDUCTOR, CHIP (1608)
R215	1-216-864-11	s	CONDUCTOR, CHIP (1608)
R216	1-216-864-11	s	CONDUCTOR, CHIP (1608)
R217	1-216-864-11	s	CONDUCTOR, CHIP (1608)
R218	1-211-977-11	s	RESISTOR,CHIP 22 1/10W (1608)
R219	1-218-863-11	s	RESISTOR,CHIP 4.7K 1/10W(1608)
R220	1-216-864-11	s	CONDUCTOR, CHIP (1608)
R221	1-216-864-11	s	CONDUCTOR, CHIP (1608)
R222	1-218-863-11	s	RESISTOR,CHIP 4.7K 1/10W(1608)
R300	1-216-864-11	s	CONDUCTOR, CHIP (1608)
R301	1-216-864-11	s	CONDUCTOR, CHIP (1608)
R302	1-216-864-11	s	CONDUCTOR, CHIP (1608)
R303	1-218-863-11	s	RESISTOR,CHIP 4.7K 1/10W(1608)
R304	1-218-863-11	s	RESISTOR,CHIP 4.7K 1/10W(1608)
R305	1-218-863-11	s	RESISTOR,CHIP 4.7K 1/10W(1608)
R306	1-218-895-11	s	RESISTOR,CHIP 100K 1/10W(1608)
R307	1-218-863-11	s	RESISTOR,CHIP 4.7K 1/10W(1608)
R338	1-218-863-11	s	RESISTOR,CHIP 4.7K 1/10W(1608)
R349	1-216-864-11	s	CONDUCTOR, CHIP (1608)
R351	1-211-977-11	s	RESISTOR,CHIP 22 1/10W (1608)
R352	1-211-977-11	s	RESISTOR,CHIP 22 1/10W (1608)
R353	1-218-863-11	s	RESISTOR,CHIP 4.7K 1/10W(1608)
R354	1-218-863-11	s	RESISTOR,CHIP 4.7K 1/10W(1608)
R355	1-218-863-11	s	RESISTOR,CHIP 4.7K 1/10W(1608)
R356	1-216-864-11	s	CONDUCTOR, CHIP (1608)
R357	1-218-895-11	s	RESISTOR,CHIP 100K 1/10W(1608)
R358	1-218-895-11	s	RESISTOR,CHIP 100K 1/10W(1608)
R359	1-211-977-11	s	RESISTOR,CHIP 22 1/10W (1608)
R400	1-218-895-11	s	RESISTOR,CHIP 100K 1/10W(1608)
R402	1-211-985-11	s	RESISTOR,CHIP 47 1/10W (1608)
R403	1-211-985-11	s	RESISTOR,CHIP 47 1/10W (1608)
R428	1-218-823-11	s	RESISTOR,CHIP 100 1/10W (1608)
R429	1-218-823-11	s	RESISTOR,CHIP 100 1/10W (1608)
R430	1-218-823-11	s	RESISTOR,CHIP 100 1/10W (1608)
R431	1-218-823-11	s	RESISTOR,CHIP 100 1/10W (1608)
R432	1-211-977-11	s	RESISTOR,CHIP 22 1/10W (1608)
R433	1-211-977-11	s	RESISTOR,CHIP 22 1/10W (1608)
R434	1-211-977-11	s	RESISTOR,CHIP 22 1/10W (1608)
R435	1-216-864-11	s	CONDUCTOR, CHIP (1608)
R436	1-216-864-11	s	CONDUCTOR, CHIP (1608)
R437	1-211-985-11	s	RESISTOR,CHIP 47 1/10W (1608)
R439	1-216-864-11	s	CONDUCTOR, CHIP (1608)
R440	1-218-895-11	s	RESISTOR,CHIP 100K 1/10W(1608)
R502	1-216-864-11	s	CONDUCTOR, CHIP (1608)
R503	1-216-864-11	s	CONDUCTOR, CHIP (1608)
R605	1-216-864-11	s	CONDUCTOR, CHIP (1608)
R606	1-216-864-11	s	CONDUCTOR, CHIP (1608)
R607	1-216-864-11	s	CONDUCTOR, CHIP (1608)
R620	1-218-895-11	s	RESISTOR,CHIP 100K 1/10W(1608)
R650	1-218-847-11	s	RESISTOR, CHIP 1K 1/10W (1608)
R652	1-216-864-11	s	CONDUCTOR, CHIP (1608)
R653	1-216-864-11	s	CONDUCTOR, CHIP (1608)
R654	1-216-864-11	s	CONDUCTOR, CHIP (1608)
R657	1-218-871-11	s	RESISTOR,CHIP 10K 1/10W (1608)

(DPR-229HD BOARD [SUFFIX 13])

Ref. No. or Q'ty	Part No.	SP	Description
R658	1-216-864-11	s	CONDUCTOR, CHIP (1608)
R659	1-216-864-11	s	CONDUCTOR, CHIP (1608)
R660	1-216-864-11	s	CONDUCTOR, CHIP (1608)
R661	1-218-903-11	s	RESISTOR,CHIP 220K 1/10W(1608)
R662	1-218-878-11	s	RESISTOR,CHIP 20K 1/10W (1608)
R663	1-218-878-11	s	RESISTOR,CHIP 20K 1/10W (1608)
R666	1-211-990-11	s	RESISTOR,CHIP 75 1/10W (1608)
R668	1-211-990-11	s	RESISTOR,CHIP 75 1/10W (1608)
R670	1-218-903-11	s	RESISTOR,CHIP 220K 1/10W(1608)
R671	1-218-903-11	s	RESISTOR,CHIP 220K 1/10W(1608)
R672	1-218-871-11	s	RESISTOR,CHIP 10K 1/10W (1608)
R673	1-218-856-11	s	RESISTOR,CHIP 2.4K 1/10W(1608)
R674	1-218-871-11	s	RESISTOR,CHIP 10K 1/10W (1608)
R676	1-211-899-11	s	RESISTOR,CHIP 0.221/4W (3225)
R715	1-216-864-11	s	CONDUCTOR, CHIP (1608)
R716	1-216-864-11	s	CONDUCTOR, CHIP (1608)
R717	1-216-864-11	s	CONDUCTOR, CHIP (1608)
R718	1-216-864-11	s	CONDUCTOR, CHIP (1608)
R719	1-216-864-11	s	CONDUCTOR, CHIP (1608)
R720	1-216-864-11	s	CONDUCTOR, CHIP (1608)
R722	1-216-864-11	s	CONDUCTOR, CHIP (1608)
R723	1-216-864-11	s	CONDUCTOR, CHIP (1608)
R724	1-216-864-11	s	CONDUCTOR, CHIP (1608)
R725	1-216-864-11	s	CONDUCTOR, CHIP (1608)
R726	1-216-864-11	s	CONDUCTOR, CHIP (1608)
R727	1-216-864-11	s	CONDUCTOR, CHIP (1608)
R728	1-216-864-11	s	CONDUCTOR, CHIP (1608)
R729	1-216-864-11	s	CONDUCTOR, CHIP (1608)
R738	1-218-847-11	s	RESISTOR, CHIP 1K 1/10W (1608)
R739	1-218-847-11	s	RESISTOR, CHIP 1K 1/10W (1608)
R740	1-218-847-11	s	RESISTOR, CHIP 1K 1/10W (1608)
R748	1-216-864-11	s	CONDUCTOR, CHIP (1608)
R749	1-216-864-11	s	CONDUCTOR, CHIP (1608)
R750	1-216-864-11	s	CONDUCTOR, CHIP (1608)
R751	1-216-864-11	s	CONDUCTOR, CHIP (1608)
R752	1-216-864-11	s	CONDUCTOR, CHIP (1608)
R753	1-216-864-11	s	CONDUCTOR, CHIP (1608)
R755	1-216-864-11	s	CONDUCTOR, CHIP (1608)
R756	1-216-864-11	s	CONDUCTOR, CHIP (1608)
R757	1-216-864-11	s	CONDUCTOR, CHIP (1608)
R758	1-216-864-11	s	CONDUCTOR, CHIP (1608)
R759	1-216-864-11	s	CONDUCTOR, CHIP (1608)
R760	1-216-864-11	s	CONDUCTOR, CHIP (1608)
R761	1-216-864-11	s	CONDUCTOR, CHIP (1608)
R762	1-216-864-11	s	CONDUCTOR, CHIP (1608)
R771	1-218-847-11	s	RESISTOR, CHIP 1K 1/10W (1608)
R772	1-218-847-11	s	RESISTOR, CHIP 1K 1/10W (1608)
R773	1-218-847-11	s	RESISTOR, CHIP 1K 1/10W (1608)
R781	1-216-864-11	s	CONDUCTOR, CHIP (1608)
R782	1-216-864-11	s	CONDUCTOR, CHIP (1608)
R783	1-216-864-11	s	CONDUCTOR, CHIP (1608)
R784	1-216-864-11	s	CONDUCTOR, CHIP (1608)
R785	1-216-864-11	s	CONDUCTOR, CHIP (1608)
R786	1-216-864-11	s	CONDUCTOR, CHIP (1608)
R788	1-216-864-11	s	CONDUCTOR, CHIP (1608)
R789	1-216-864-11	s	CONDUCTOR, CHIP (1608)
R790	1-216-864-11	s	CONDUCTOR, CHIP (1608)
R791	1-216-864-11	s	CONDUCTOR, CHIP (1608)
R792	1-216-864-11	s	CONDUCTOR, CHIP (1608)

(DPR-229HD BOARD [SUFFIX 13])

Ref. No. or Q'ty	Part No.	SP	Description
R793	1-216-864-11	s	CONDUCTOR, CHIP (1608)
R794	1-216-864-11	s	CONDUCTOR, CHIP (1608)
R795	1-216-864-11	s	CONDUCTOR, CHIP (1608)
R801	1-216-864-11	s	CONDUCTOR, CHIP (1608)
R802	1-216-864-11	s	CONDUCTOR, CHIP (1608)
R803	1-218-863-11	s	RESISTOR,CHIP 4.7K 1/10W(1608)
R805	1-218-863-11	s	RESISTOR,CHIP 4.7K 1/10W(1608)
R811	1-216-864-11	s	CONDUCTOR, CHIP (1608)
R813	1-218-831-11	s	RESISTOR, CHIP 220 1/10W(1608)
R814	1-218-831-11	s	RESISTOR, CHIP 220 1/10W(1608)
R815	1-218-831-11	s	RESISTOR, CHIP 220 1/10W(1608)
R820	1-211-977-11	s	RESISTOR,CHIP 22 1/10W (1608)
R822	1-211-977-11	s	RESISTOR,CHIP 22 1/10W (1608)
R823	1-211-977-11	s	RESISTOR,CHIP 22 1/10W (1608)
R824	1-211-977-11	s	RESISTOR,CHIP 22 1/10W (1608)
R825	1-211-977-11	s	RESISTOR,CHIP 22 1/10W (1608)
R826	1-211-977-11	s	RESISTOR,CHIP 22 1/10W (1608)
R828	1-211-977-11	s	RESISTOR,CHIP 22 1/10W (1608)
R831	1-211-977-11	s	RESISTOR,CHIP 22 1/10W (1608)
R834	1-218-895-11	s	RESISTOR,CHIP 100K 1/10W(1608)
R835	1-218-895-11	s	RESISTOR,CHIP 100K 1/10W(1608)
R839	1-216-864-11	s	CONDUCTOR, CHIP (1608)
R841	1-211-977-11	s	RESISTOR,CHIP 22 1/10W (1608)
R851	1-216-864-11	s	CONDUCTOR, CHIP (1608)
R854	1-211-977-11	s	RESISTOR,CHIP 22 1/10W (1608)
R855	1-211-977-11	s	RESISTOR,CHIP 22 1/10W (1608)
R856	1-211-977-11	s	RESISTOR,CHIP 22 1/10W (1608)
R857	1-211-977-11	s	RESISTOR,CHIP 22 1/10W (1608)
R858	1-211-977-11	s	RESISTOR,CHIP 22 1/10W (1608)
R860	1-211-977-11	s	RESISTOR,CHIP 22 1/10W (1608)
R861	1-211-977-11	s	RESISTOR,CHIP 22 1/10W (1608)
R862	1-211-977-11	s	RESISTOR,CHIP 22 1/10W (1608)
R863	1-218-871-11	s	RESISTOR,CHIP 10K 1/10W (1608)
R864	1-218-847-11	s	RESISTOR, CHIP 1K 1/10W (1608)
R865	1-218-847-11	s	RESISTOR, CHIP 1K 1/10W (1608)
R866	1-218-835-11	s	RESISTOR,CHIP 330 1/10W (1608)
R867	1-218-835-11	s	RESISTOR,CHIP 330 1/10W (1608)
R1004	1-218-847-11	s	RESISTOR, CHIP 1K 1/10W (1608)
R1005	1-218-847-11	s	RESISTOR, CHIP 1K 1/10W (1608)
R1006	1-218-847-11	s	RESISTOR, CHIP 1K 1/10W (1608)
R1014	1-216-864-11	s	CONDUCTOR, CHIP (1608)
R1015	1-216-864-11	s	CONDUCTOR, CHIP (1608)
R1016	1-216-864-11	s	CONDUCTOR, CHIP (1608)
R1017	1-216-864-11	s	CONDUCTOR, CHIP (1608)
R1018	1-216-864-11	s	CONDUCTOR, CHIP (1608)
R1019	1-216-864-11	s	CONDUCTOR, CHIP (1608)
R1021	1-216-864-11	s	CONDUCTOR, CHIP (1608)
R1022	1-216-864-11	s	CONDUCTOR, CHIP (1608)
R1023	1-216-864-11	s	CONDUCTOR, CHIP (1608)
R1024	1-216-864-11	s	CONDUCTOR, CHIP (1608)
R1025	1-216-864-11	s	CONDUCTOR, CHIP (1608)
R1026	1-216-864-11	s	CONDUCTOR, CHIP (1608)
R1027	1-216-864-11	s	CONDUCTOR, CHIP (1608)
R1028	1-216-864-11	s	CONDUCTOR, CHIP (1608)
R1037	1-216-864-11	s	CONDUCTOR, CHIP (1608)
R1038	1-216-864-11	s	CONDUCTOR, CHIP (1608)
R1039	1-216-864-11	s	CONDUCTOR, CHIP (1608)
R1040	1-216-864-11	s	CONDUCTOR, CHIP (1608)
R1042	1-218-847-11	s	RESISTOR, CHIP 1K 1/10W (1608)

(DPR-229HD BOARD [SUFFIX 13])

Ref. No. or Q'ty	Part No.	SP	Description
R1043	1-218-847-11	s	RESISTOR, CHIP 1K 1/10W (1608)
R1044	1-218-847-11	s	RESISTOR, CHIP 1K 1/10W (1608)
R1052	1-218-895-11	s	RESISTOR,CHIP 100K 1/10W(1608)
R1053	1-218-895-11	s	RESISTOR,CHIP 100K 1/10W(1608)
R1054	1-216-864-11	s	CONDUCTOR, CHIP (1608)
R1055	1-216-864-11	s	CONDUCTOR, CHIP (1608)
R1056	1-216-864-11	s	CONDUCTOR, CHIP (1608)
RB100	1-233-810-21	s	RES, NETWORK 100K (3216)
RB101	1-233-810-21	s	RES, NETWORK 100K (3216)
RB102	1-239-409-11	s	RESISTOR NETWORK 47 (1608)
RB103	1-239-409-11	s	RESISTOR NETWORK 47 (1608)
RB104	1-233-810-21	s	RES, NETWORK 100K (3216)
RB106	1-234-397-11	s	NETWORK, RES (8 GANG) 100K
RB107	1-234-397-11	s	NETWORK, RES (8 GANG) 100K
RB108	1-233-575-11	s	RES, CHIP NETWORK 22
RB109	1-233-575-11	s	RES, CHIP NETWORK 22
RB110	1-233-575-11	s	RES, CHIP NETWORK 22
RB111	1-233-575-11	s	RES, CHIP NETWORK 22
RB112	1-233-575-11	s	RES, CHIP NETWORK 22
RB113	1-234-397-11	s	NETWORK, RES (8 GANG) 100K
RB114	1-233-576-11	s	RESISTOR,CHIP NETWORK 100
RB115	1-233-576-11	s	RESISTOR,CHIP NETWORK 100
RB116	1-233-810-21	s	RES, NETWORK 100K (3216)
RB117	1-234-397-11	s	NETWORK, RES (8 GANG) 100K
RB118	1-234-397-11	s	NETWORK, RES (8 GANG) 100K
RB119	1-234-397-11	s	NETWORK, RES (8 GANG) 100K
RB120	1-234-397-11	s	NETWORK, RES (8 GANG) 100K
RB121	1-233-576-11	s	RESISTOR,CHIP NETWORK 100
RB122	1-233-576-11	s	RESISTOR,CHIP NETWORK 100
RB123	1-234-397-11	s	NETWORK, RES (8 GANG) 100K
RB200	1-233-411-11	s	RESISTOR,CHIP NETWORK 220/3216
RB201	1-233-411-11	s	RESISTOR,CHIP NETWORK 220/3216
RB202	1-233-411-11	s	RESISTOR,CHIP NETWORK 220/3216
RB203	1-233-411-11	s	RESISTOR,CHIP NETWORK 220/3216
RB204	1-233-411-11	s	RESISTOR,CHIP NETWORK 220/3216
RB205	1-233-575-11	s	RES, CHIP NETWORK 22
RB206	1-233-575-11	s	RES, CHIP NETWORK 22
RB213	1-239-409-11	s	RESISTOR NETWORK 47 (1608)
RB214	1-239-409-11	s	RESISTOR NETWORK 47 (1608)
RB215	1-239-409-11	s	RESISTOR NETWORK 47 (1608)
RB216	1-239-409-11	s	RESISTOR NETWORK 47 (1608)
RB217	1-239-409-11	s	RESISTOR NETWORK 47 (1608)
RB218	1-239-409-11	s	RESISTOR NETWORK 47 (1608)
RB300	1-233-810-21	s	RES, NETWORK 100K (3216)
RB500	1-233-414-11	s	RESISTOR,CHIP NETWORK 4.7K
RB501	1-233-412-11	s	RESISTOR,CHIP NETWORK 1K
RB502	1-233-412-11	s	RESISTOR,CHIP NETWORK 1K
RB503	1-233-412-11	s	RESISTOR,CHIP NETWORK 1K
RB504	1-233-412-11	s	RESISTOR,CHIP NETWORK 1K
RB505	1-233-412-11	s	RESISTOR,CHIP NETWORK 1K
RB506	1-233-412-11	s	RESISTOR,CHIP NETWORK 1K
RB507	1-233-412-11	s	RESISTOR,CHIP NETWORK 1K
RB508	1-233-412-11	s	RESISTOR,CHIP NETWORK 1K
RB509	1-233-412-11	s	RESISTOR,CHIP NETWORK 1K
RB510	1-233-412-11	s	RESISTOR,CHIP NETWORK 1K
RB511	1-233-412-11	s	RESISTOR,CHIP NETWORK 1K
RB512	1-233-412-11	s	RESISTOR,CHIP NETWORK 1K
RB513	1-233-412-11	s	RESISTOR,CHIP NETWORK 1K

(DPR-229HD BOARD [SUFFIX 13])

Ref. No. or Q'ty	Part No.	SP	Description
RB514	1-233-412-11	s	RESISTOR,CHIP NETWORK 1K
RB515	1-233-412-11	s	RESISTOR,CHIP NETWORK 1K
RB516	1-234-523-21	s	RESISTOR,CHIP NETWORK
RB517	1-234-523-21	s	RESISTOR,CHIP NETWORK
RB518	1-234-523-21	s	RESISTOR,CHIP NETWORK
RB600	1-234-523-21	s	RESISTOR,CHIP NETWORK
RB601	1-234-523-21	s	RESISTOR,CHIP NETWORK
RB602	1-234-523-21	s	RESISTOR,CHIP NETWORK
RB700	1-233-810-21	s	RES, NETWORK 100K (3216)
RB701	1-233-810-21	s	RES, NETWORK 100K (3216)
RB702	1-233-810-21	s	RES, NETWORK 100K (3216)
RB703	1-233-810-21	s	RES, NETWORK 100K (3216)
RB704	1-233-810-21	s	RES, NETWORK 100K (3216)
RB705	1-233-810-21	s	RES, NETWORK 100K (3216)
RB706	1-233-810-21	s	RES, NETWORK 100K (3216)
RB707	1-233-810-21	s	RES, NETWORK 100K (3216)
RB708	1-233-810-21	s	RES, NETWORK 100K (3216)
RB709	1-234-397-11	s	NETWORK, RES (8 GANG) 100K
RB710	1-234-397-11	s	NETWORK, RES (8 GANG) 100K
RB711	1-234-397-11	s	NETWORK, RES (8 GANG) 100K
RB712	1-234-397-11	s	NETWORK, RES (8 GANG) 100K
RB801	1-233-810-21	s	RES, NETWORK 100K (3216)
RB804	1-233-411-11	s	RESISTOR,CHIP NETWORK 220/3216
RB805	1-233-411-11	s	RESISTOR,CHIP NETWORK 220/3216
RB806	1-233-411-11	s	RESISTOR,CHIP NETWORK 220/3216
RB807	1-233-414-11	s	RESISTOR,CHIP NETWORK 4.7K
RB808	1-239-409-11	s	RESISTOR NETWORK 47 (1608)
RB809	1-239-409-11	s	RESISTOR NETWORK 47 (1608)
RB810	1-239-409-11	s	RESISTOR NETWORK 47 (1608)
RB811	1-239-409-11	s	RESISTOR NETWORK 47 (1608)
RB812	1-239-409-11	s	RESISTOR NETWORK 47 (1608)
RB813	1-233-810-21	s	RES, NETWORK 100K (3216)
RB814	1-233-810-21	s	RES, NETWORK 100K (3216)
RB815	1-233-810-21	s	RES, NETWORK 100K (3216)
RB816	1-233-810-21	s	RES, NETWORK 100K (3216)
RB817	1-233-414-11	s	RESISTOR,CHIP NETWORK 4.7K
RB818	1-236-908-11	s	RESISTOR,NETWORK 10K (3216)
X200	1-781-809-21	s	OSCILLATOR, CRYSTAL (SMD)

DPR-229HD BOARD [SUFFIX 14-]

[Lot No. 561 -] HDW-D2000

Ref. No. or Q'ty	Part No.	SP	Description
1pc	A-1090-695-A	s	MOUNTED CIRCUIT BOARD, DPR-229HD
1pc	3-179-084-11	s	LEVER (R), C BOARD
1pc	3-179-085-11	s	LEVER (L), C BOARD
C100	1-131-992-11	s	CAP, CERAMIC 100000PF F 1608
C101	1-131-992-11	s	CAP, CERAMIC 100000PF F 1608
C102	1-162-927-11	s	CAPACITOR,CERAMIC 100PF/50V CH
C103	1-126-394-11	s	CAPACITOR,ELECT 10MF/16V(CHIP)
C104	1-131-992-11	s	CAP, CERAMIC 100000PF F 1608
C105	1-131-992-11	s	CAP, CERAMIC 100000PF F 1608
C106	1-131-992-11	s	CAP, CERAMIC 100000PF F 1608
C107	1-131-992-11	s	CAP, CERAMIC 100000PF F 1608
C108	1-131-992-11	s	CAP, CERAMIC 100000PF F 1608
C109	1-131-992-11	s	CAP, CERAMIC 100000PF F 1608
C110	1-131-992-11	s	CAP, CERAMIC 100000PF F 1608
C111	1-131-992-11	s	CAP, CERAMIC 100000PF F 1608
C112	1-131-992-11	s	CAP, CERAMIC 100000PF F 1608
C113	1-131-992-11	s	CAP, CERAMIC 100000PF F 1608
C114	1-131-992-11	s	CAP, CERAMIC 100000PF F 1608
C115	1-131-992-11	s	CAP, CERAMIC 100000PF F 1608
C116	1-131-992-11	s	CAP, CERAMIC 100000PF F 1608
C117	1-131-992-11	s	CAP, CERAMIC 100000PF F 1608
C118	1-131-992-11	s	CAP, CERAMIC 100000PF F 1608
C119	1-131-992-11	s	CAP, CERAMIC 100000PF F 1608
C120	1-131-992-11	s	CAP, CERAMIC 100000PF F 1608
C121	1-131-992-11	s	CAP, CERAMIC 100000PF F 1608
C122	1-131-992-11	s	CAP, CERAMIC 100000PF F 1608
C123	1-131-992-11	s	CAP, CERAMIC 100000PF F 1608
C124	1-131-992-11	s	CAP, CERAMIC 100000PF F 1608
C125	1-131-992-11	s	CAP, CERAMIC 100000PF F 1608
C126	1-131-992-11	s	CAP, CERAMIC 100000PF F 1608
C127	1-131-992-11	s	CAP, CERAMIC 100000PF F 1608
C200	1-126-394-11	s	CAPACITOR,ELECT 10MF/16V(CHIP)
C201	1-131-992-11	s	CAP, CERAMIC 100000PF F 1608
C202	1-131-992-11	s	CAP, CERAMIC 100000PF F 1608
C203	1-131-992-11	s	CAP, CERAMIC 100000PF F 1608
C204	1-126-394-11	s	CAPACITOR,ELECT 10MF/16V(CHIP)
C205	1-131-992-11	s	CAP, CERAMIC 100000PF F 1608
C206	1-131-992-11	s	CAP, CERAMIC 100000PF F 1608
C207	1-126-394-11	s	CAPACITOR,ELECT 10MF/16V(CHIP)
C208	1-131-992-11	s	CAP, CERAMIC 100000PF F 1608
C209	1-131-992-11	s	CAP, CERAMIC 100000PF F 1608
C210	1-131-992-11	s	CAP, CERAMIC 100000PF F 1608
C211	1-127-692-91	s	CAP, CHIP CERAMIC 10MF B 3216
C212	1-127-692-91	s	CAP, CHIP CERAMIC 10MF B 3216
C213	1-131-992-11	s	CAP, CERAMIC 100000PF F 1608
C214	1-131-992-11	s	CAP, CERAMIC 100000PF F 1608
C215	1-131-992-11	s	CAP, CERAMIC 100000PF F 1608
C216	1-131-992-11	s	CAP, CERAMIC 100000PF F 1608
C217	1-131-992-11	s	CAP, CERAMIC 100000PF F 1608
C218	1-131-992-11	s	CAP, CERAMIC 100000PF F 1608
C219	1-131-992-11	s	CAP, CERAMIC 100000PF F 1608
C220	1-131-992-11	s	CAP, CERAMIC 100000PF F 1608
C221	1-131-992-11	s	CAP, CERAMIC 100000PF F 1608
C222	1-131-992-11	s	CAP, CERAMIC 100000PF F 1608
C223	1-131-992-11	s	CAP, CERAMIC 100000PF F 1608
C224	1-131-992-11	s	CAP, CERAMIC 100000PF F 1608
C225	1-131-992-11	s	CAP, CERAMIC 100000PF F 1608

(DPR-229HD BOARD [SUFFIX 14-])

Ref. No. or Q'ty	Part No.	SP	Description
C226	1-131-992-11	s	CAP, CERAMIC 100000PF F 1608
C227	1-131-992-11	s	CAP, CERAMIC 100000PF F 1608
C228	1-131-992-11	s	CAP, CERAMIC 100000PF F 1608
C230	1-126-394-11	s	CAPACITOR,ELECT 10MF/16V(CHIP)
C231	1-131-992-11	s	CAP, CERAMIC 100000PF F 1608
C232	1-131-992-11	s	CAP, CERAMIC 100000PF F 1608
C233	1-131-992-11	s	CAP, CERAMIC 100000PF F 1608
C234	1-131-992-11	s	CAP, CERAMIC 100000PF F 1608
C235	1-131-992-11	s	CAP, CERAMIC 100000PF F 1608
C300	1-131-992-11	s	CAP, CERAMIC 100000PF F 1608
C301	1-131-992-11	s	CAP, CERAMIC 100000PF F 1608
C302	1-131-992-11	s	CAP, CERAMIC 100000PF F 1608
C303	1-131-992-11	s	CAP, CERAMIC 100000PF F 1608
C304	1-126-394-11	s	CAPACITOR,ELECT 10MF/16V(CHIP)
C315	1-131-992-11	s	CAP, CERAMIC 100000PF F 1608
C316	1-131-992-11	s	CAP, CERAMIC 100000PF F 1608
C329	1-131-992-11	s	CAP, CERAMIC 100000PF F 1608
C330	1-131-992-11	s	CAP, CERAMIC 100000PF F 1608
C331	1-126-394-11	s	CAPACITOR,ELECT 10MF/16V(CHIP)
C332	1-131-992-11	s	CAP, CERAMIC 100000PF F 1608
C333	1-131-992-11	s	CAP, CERAMIC 100000PF F 1608
C334	1-131-992-11	s	CAP, CERAMIC 100000PF F 1608
C335	1-131-992-11	s	CAP, CERAMIC 100000PF F 1608
C336	1-131-992-11	s	CAP, CERAMIC 100000PF F 1608
C337	1-131-992-11	s	CAP, CERAMIC 100000PF F 1608
C338	1-131-992-11	s	CAP, CERAMIC 100000PF F 1608
C339	1-131-992-11	s	CAP, CERAMIC 100000PF F 1608
C404	1-131-992-11	s	CAP, CERAMIC 100000PF F 1608
C412	1-126-394-11	s	CAPACITOR,ELECT 10MF/16V(CHIP)
C413	1-131-992-11	s	CAP, CERAMIC 100000PF F 1608
C418	1-126-394-11	s	CAPACITOR,ELECT 10MF/16V(CHIP)
C419	1-131-992-11	s	CAP, CERAMIC 100000PF F 1608
C420	1-131-992-11	s	CAP, CERAMIC 100000PF F 1608
C421	1-131-992-11	s	CAP, CERAMIC 100000PF F 1608
C422	1-131-992-11	s	CAP, CERAMIC 100000PF F 1608
C423	1-131-992-11	s	CAP, CERAMIC 100000PF F 1608
C424	1-131-992-11	s	CAP, CERAMIC 100000PF F 1608
C425	1-131-992-11	s	CAP, CERAMIC 100000PF F 1608
C426	1-131-992-11	s	CAP, CERAMIC 100000PF F 1608
C427	1-131-992-11	s	CAP, CERAMIC 100000PF F 1608
C428	1-131-992-11	s	CAP, CERAMIC 100000PF F 1608
C429	1-131-992-11	s	CAP, CERAMIC 100000PF F 1608
C430	1-131-992-11	s	CAP, CERAMIC 100000PF F 1608
C431	1-131-992-11	s	CAP, CERAMIC 100000PF F 1608
C432	1-131-992-11	s	CAP, CERAMIC 100000PF F 1608
C433	1-126-394-11	s	CAPACITOR,ELECT 10MF/16V(CHIP)
C440	1-131-992-11	s	CAP, CERAMIC 100000PF F 1608
C500	1-131-992-11	s	CAP, CERAMIC 100000PF F 1608
C501	1-131-992-11	s	CAP, CERAMIC 100000PF F 1608
C502	1-131-992-11	s	CAP, CERAMIC 100000PF F 1608
C503	1-131-992-11	s	CAP, CERAMIC 100000PF F 1608
C504	1-131-992-11	s	CAP, CERAMIC 100000PF F 1608
C505	1-131-992-11	s	CAP, CERAMIC 100000PF F 1608
C506	1-131-992-11	s	CAP, CERAMIC 100000PF F 1608
C507	1-131-992-11	s	CAP, CERAMIC 100000PF F 1608
C508	1-131-992-11	s	CAP, CERAMIC 100000PF F 1608
C509	1-131-992-11	s	CAP, CERAMIC 100000PF F 1608
C510	1-131-992-11	s	CAP, CERAMIC 100000PF F 1608
C511	1-131-992-11	s	CAP, CERAMIC 100000PF F 1608

(DPR-229HD BOARD [SUFFIX 14-])

Ref. No. or Q'ty	Part No.	SP	Description
C512	1-131-992-11	s	CAP, CERAMIC 100000PF F 1608
C513	1-131-992-11	s	CAP, CERAMIC 100000PF F 1608
C514	1-131-992-11	s	CAP, CERAMIC 100000PF F 1608
C515	1-131-992-11	s	CAP, CERAMIC 100000PF F 1608
C516	1-131-992-11	s	CAP, CERAMIC 100000PF F 1608
C517	1-131-992-11	s	CAP, CERAMIC 100000PF F 1608
C518	1-131-992-11	s	CAP, CERAMIC 100000PF F 1608
C519	1-131-992-11	s	CAP, CERAMIC 100000PF F 1608
C520	1-131-992-11	s	CAP, CERAMIC 100000PF F 1608
C521	1-131-992-11	s	CAP, CERAMIC 100000PF F 1608
C522	1-131-992-11	s	CAP, CERAMIC 100000PF F 1608
C523	1-126-394-11	s	CAPACITOR,ELECT 10MF/16V(CHIP)
C524	1-131-992-11	s	CAP, CERAMIC 100000PF F 1608
C525	1-131-992-11	s	CAP, CERAMIC 100000PF F 1608
C526	1-162-922-11	s	CAPACITOR,CERAMIC 39PF/50V CH
C527	1-131-992-11	s	CAP, CERAMIC 100000PF F 1608
C528	1-131-992-11	s	CAP, CERAMIC 100000PF F 1608
C529	1-131-992-11	s	CAP, CERAMIC 100000PF F 1608
C530	1-131-992-11	s	CAP, CERAMIC 100000PF F 1608
C531	1-131-992-11	s	CAP, CERAMIC 100000PF F 1608
C532	1-131-992-11	s	CAP, CERAMIC 100000PF F 1608
C533	1-131-992-11	s	CAP, CERAMIC 100000PF F 1608
C534	1-131-992-11	s	CAP, CERAMIC 100000PF F 1608
C535	1-131-992-11	s	CAP, CERAMIC 100000PF F 1608
C536	1-131-992-11	s	CAP, CERAMIC 100000PF F 1608
C537	1-131-992-11	s	CAP, CERAMIC 100000PF F 1608
C538	1-131-992-11	s	CAP, CERAMIC 100000PF F 1608
C539	1-131-992-11	s	CAP, CERAMIC 100000PF F 1608
C540	1-131-992-11	s	CAP, CERAMIC 100000PF F 1608
C541	1-131-992-11	s	CAP, CERAMIC 100000PF F 1608
C542	1-131-992-11	s	CAP, CERAMIC 100000PF F 1608
C543	1-131-992-11	s	CAP, CERAMIC 100000PF F 1608
C544	1-131-992-11	s	CAP, CERAMIC 100000PF F 1608
C545	1-131-992-11	s	CAP, CERAMIC 100000PF F 1608
C546	1-131-992-11	s	CAP, CERAMIC 100000PF F 1608
C547	1-131-992-11	s	CAP, CERAMIC 100000PF F 1608
C548	1-131-992-11	s	CAP, CERAMIC 100000PF F 1608
C549	1-131-992-11	s	CAP, CERAMIC 100000PF F 1608
C550	1-131-992-11	s	CAP, CERAMIC 100000PF F 1608
C551	1-131-992-11	s	CAP, CERAMIC 100000PF F 1608
C552	1-131-992-11	s	CAP, CERAMIC 100000PF F 1608
C606	1-131-992-11	s	CAP, CERAMIC 100000PF F 1608
C607	1-126-394-11	s	CAPACITOR,ELECT 10MF/16V(CHIP)
C608	1-131-992-11	s	CAP, CERAMIC 100000PF F 1608
C609	1-131-992-11	s	CAP, CERAMIC 100000PF F 1608
C650	1-162-970-11	s	CAPACITOR CERAMIC 0.01MF/25V B
C651	1-162-970-11	s	CAPACITOR CERAMIC 0.01MF/25V B
C652	1-131-992-11	s	CAP, CERAMIC 100000PF F 1608
C653	1-131-992-11	s	CAP, CERAMIC 100000PF F 1608
C654	1-126-394-11	s	CAPACITOR,ELECT 10MF/16V(CHIP)
C655	1-131-992-11	s	CAP, CERAMIC 100000PF F 1608
C656	1-131-992-11	s	CAP, CERAMIC 100000PF F 1608
C657	1-131-992-11	s	CAP, CERAMIC 100000PF F 1608
C658	1-131-992-11	s	CAP, CERAMIC 100000PF F 1608
C659	1-131-992-11	s	CAP, CERAMIC 100000PF F 1608
C660	1-131-992-11	s	CAP, CERAMIC 100000PF F 1608
C661	1-131-992-11	s	CAP, CERAMIC 100000PF F 1608
C662	1-131-992-11	s	CAP, CERAMIC 100000PF F 1608
C663	1-126-394-11	s	CAPACITOR,ELECT 10MF/16V(CHIP)

(DPR-229HD BOARD [SUFFIX 14-])

Ref. No. or Q'ty	Part No.	SP	Description
C664	1-165-870-21	s	CAPACITOR, ELECT 100MF(6.3X6)
C665	1-126-394-11	s	CAPACITOR,ELECT 10MF/16V(CHIP)
C666	1-131-992-11	s	CAP, CERAMIC 100000PF F 1608
C667	1-131-992-11	s	CAP, CERAMIC 100000PF F 1608
C668	1-131-992-11	s	CAP, CERAMIC 100000PF F 1608
C669	1-131-992-11	s	CAP, CERAMIC 100000PF F 1608
C670	1-131-992-11	s	CAP, CERAMIC 100000PF F 1608
C671	1-131-992-11	s	CAP, CERAMIC 100000PF F 1608
C672	1-131-992-11	s	CAP, CERAMIC 100000PF F 1608
C673	1-131-992-11	s	CAP, CERAMIC 100000PF F 1608
C674	1-131-992-11	s	CAP, CERAMIC 100000PF F 1608
C675	1-131-992-11	s	CAP, CERAMIC 100000PF F 1608
C676	1-131-992-11	s	CAP, CERAMIC 100000PF F 1608
C677	1-131-992-11	s	CAP, CERAMIC 100000PF F 1608
C678	1-131-992-11	s	CAP, CERAMIC 100000PF F 1608
C679	1-131-992-11	s	CAP, CERAMIC 100000PF F 1608
C680	1-131-992-11	s	CAP, CERAMIC 100000PF F 1608
C681	1-131-992-11	s	CAP, CERAMIC 100000PF F 1608
C682	1-131-992-11	s	CAP, CERAMIC 100000PF F 1608
C683	1-131-992-11	s	CAP, CERAMIC 100000PF F 1608
C684	1-131-992-11	s	CAP, CERAMIC 100000PF F 1608
C685	1-162-925-11	s	CAPACITOR,CERAMIC 68PF/50V CH
C686	1-165-872-21	s	CAPACITOR,SOLID ELECT 47MF
C687	1-126-394-11	s	CAPACITOR,ELECT 10MF/16V(CHIP)
C688	1-126-394-11	s	CAPACITOR,ELECT 10MF/16V(CHIP)
C689	1-131-992-11	s	CAP, CERAMIC 100000PF F 1608
C690	1-131-992-11	s	CAP, CERAMIC 100000PF F 1608
C700	1-131-992-11	s	CAP, CERAMIC 100000PF F 1608
C701	1-113-503-11	s	CAPACITOR,CERAMIC 3900PF CH
C702	1-162-968-11	s	CAPACITOR,CERAMIC 4700PF/50V B
C703	1-131-992-11	s	CAP, CERAMIC 100000PF F 1608
C704	1-131-992-11	s	CAP, CERAMIC 100000PF F 1608
C705	1-131-992-11	s	CAP, CERAMIC 100000PF F 1608
C706	1-131-992-11	s	CAP, CERAMIC 100000PF F 1608
C707	1-131-992-11	s	CAP, CERAMIC 100000PF F 1608
C708	1-131-992-11	s	CAP, CERAMIC 100000PF F 1608
C709	1-131-992-11	s	CAP, CERAMIC 100000PF F 1608
C710	1-131-992-11	s	CAP, CERAMIC 100000PF F 1608
C711	1-131-992-11	s	CAP, CERAMIC 100000PF F 1608
C712	1-131-992-11	s	CAP, CERAMIC 100000PF F 1608
C713	1-113-503-11	s	CAPACITOR,CERAMIC 3900PF CH
C714	1-162-968-11	s	CAPACITOR,CERAMIC 4700PF/50V B
C715	1-131-992-11	s	CAP, CERAMIC 100000PF F 1608
C716	1-131-992-11	s	CAP, CERAMIC 100000PF F 1608
C717	1-131-992-11	s	CAP, CERAMIC 100000PF F 1608
C718	1-131-992-11	s	CAP, CERAMIC 100000PF F 1608
C719	1-131-992-11	s	CAP, CERAMIC 100000PF F 1608
C720	1-131-992-11	s	CAP, CERAMIC 100000PF F 1608
C721	1-131-992-11	s	CAP, CERAMIC 100000PF F 1608
C722	1-131-992-11	s	CAP, CERAMIC 100000PF F 1608
C723	1-131-992-11	s	CAP, CERAMIC 100000PF F 1608
C724	1-131-992-11	s	CAP, CERAMIC 100000PF F 1608
C725	1-113-503-11	s	CAPACITOR,CERAMIC 3900PF CH
C726	1-162-968-11	s	CAPACITOR,CERAMIC 4700PF/50V B
C727	1-131-992-11	s	CAP, CERAMIC 100000PF F 1608
C728	1-131-992-11	s	CAP, CERAMIC 100000PF F 1608
C729	1-131-992-11	s	CAP, CERAMIC 100000PF F 1608
C730	1-131-992-11	s	CAP, CERAMIC 100000PF F 1608
C731	1-131-992-11	s	CAP, CERAMIC 100000PF F 1608

(DPR-229HD BOARD [SUFFIX 14-])

Ref. No. or Q'ty	Part No.	SP	Description
C732	1-131-992-11	s	CAP, CERAMIC 100000PF F 1608
C733	1-131-992-11	s	CAP, CERAMIC 100000PF F 1608
C734	1-131-992-11	s	CAP, CERAMIC 100000PF F 1608
C735	1-131-992-11	s	CAP, CERAMIC 100000PF F 1608
C736	1-131-992-11	s	CAP, CERAMIC 100000PF F 1608
C737	1-113-503-11	s	CAPACITOR,CERAMIC 3900PF CH
C738	1-162-968-11	s	CAPACITOR,CERAMIC 4700PF/50V B
C739	1-131-992-11	s	CAP, CERAMIC 100000PF F 1608
C740	1-131-992-11	s	CAP, CERAMIC 100000PF F 1608
C741	1-131-992-11	s	CAP, CERAMIC 100000PF F 1608
C742	1-131-992-11	s	CAP, CERAMIC 100000PF F 1608
C743	1-131-992-11	s	CAP, CERAMIC 100000PF F 1608
C744	1-131-992-11	s	CAP, CERAMIC 100000PF F 1608
C745	1-131-992-11	s	CAP, CERAMIC 100000PF F 1608
C746	1-131-992-11	s	CAP, CERAMIC 100000PF F 1608
C747	1-131-992-11	s	CAP, CERAMIC 100000PF F 1608
C748	1-131-992-11	s	CAP, CERAMIC 100000PF F 1608
C800	1-126-394-11	s	CAPACITOR,ELECT 10MF/16V(CHIP)
C801	1-131-992-11	s	CAP, CERAMIC 100000PF F 1608
C802	1-131-992-11	s	CAP, CERAMIC 100000PF F 1608
C803	1-131-992-11	s	CAP, CERAMIC 100000PF F 1608
C804	1-131-992-11	s	CAP, CERAMIC 100000PF F 1608
C810	1-131-992-11	s	CAP, CERAMIC 100000PF F 1608
C811	1-131-992-11	s	CAP, CERAMIC 100000PF F 1608
C812	1-128-590-11	s	CAPACITOR ELECT 100MF/6.3V(105
C813	1-128-590-11	s	CAPACITOR ELECT 100MF/6.3V(105
C814	1-131-992-11	s	CAP, CERAMIC 100000PF F 1608
C815	1-131-992-11	s	CAP, CERAMIC 100000PF F 1608
C816	1-131-992-11	s	CAP, CERAMIC 100000PF F 1608
C817	1-131-992-11	s	CAP, CERAMIC 100000PF F 1608
C818	1-131-992-11	s	CAP, CERAMIC 100000PF F 1608
C819	1-128-590-11	s	CAPACITOR ELECT 100MF/6.3V(105
C820	1-128-590-11	s	CAPACITOR ELECT 100MF/6.3V(105
C821	1-128-590-11	s	CAPACITOR ELECT 100MF/6.3V(105
C822	1-128-590-11	s	CAPACITOR ELECT 100MF/6.3V(105
C823	1-131-992-11	s	CAP, CERAMIC 100000PF F 1608
C827	1-131-992-11	s	CAP, CERAMIC 100000PF F 1608
C829	1-131-992-11	s	CAP, CERAMIC 100000PF F 1608
C831	1-131-992-11	s	CAP, CERAMIC 100000PF F 1608
C832	1-131-992-11	s	CAP, CERAMIC 100000PF F 1608
C833	1-131-992-11	s	CAP, CERAMIC 100000PF F 1608
C834	1-131-992-11	s	CAP, CERAMIC 100000PF F 1608
C835	1-131-992-11	s	CAP, CERAMIC 100000PF F 1608
C837	1-131-992-11	s	CAP, CERAMIC 100000PF F 1608
C838	1-131-992-11	s	CAP, CERAMIC 100000PF F 1608
C839	1-126-394-11	s	CAPACITOR,ELECT 10MF/16V(CHIP)
C842	1-131-992-11	s	CAP, CERAMIC 100000PF F 1608
C843	1-131-992-11	s	CAP, CERAMIC 100000PF F 1608
C844	1-131-992-11	s	CAP, CERAMIC 100000PF F 1608
C845	1-131-992-11	s	CAP, CERAMIC 100000PF F 1608
C846	1-131-992-11	s	CAP, CERAMIC 100000PF F 1608
C847	1-131-992-11	s	CAP, CERAMIC 100000PF F 1608
C848	1-126-394-11	s	CAPACITOR,ELECT 10MF/16V(CHIP)
C849	1-126-394-11	s	CAPACITOR,ELECT 10MF/16V(CHIP)
C850	1-131-992-11	s	CAP, CERAMIC 100000PF F 1608
C851	1-131-992-11	s	CAP, CERAMIC 100000PF F 1608
C852	1-131-992-11	s	CAP, CERAMIC 100000PF F 1608
C853	1-126-394-11	s	CAPACITOR,ELECT 10MF/16V(CHIP)
C862	1-131-992-11	s	CAP, CERAMIC 100000PF F 1608

(DPR-229HD BOARD [SUFFIX 14-])

Ref. No. or Q'ty	Part No.	SP	Description
C864	1-131-992-11	s	CAP, CERAMIC 100000PF F 1608
C865	1-131-992-11	s	CAP, CERAMIC 100000PF F 1608
C867	1-127-861-11	s	CAP, CERAMIC 2.2MF B (3216)
C868	1-127-861-11	s	CAP, CERAMIC 2.2MF B (3216)
C869	1-131-992-11	s	CAP, CERAMIC 100000PF F 1608
CN16	1-580-789-91	s	PIN, CONNECTOR 6P
E100	1-535-877-22	s	CHIP,CHECKER (TEST POINT)
E200	1-535-877-22	s	CHIP,CHECKER (TEST POINT)
E300	1-535-877-22	s	CHIP,CHECKER (TEST POINT)
E400	1-535-877-22	s	CHIP,CHECKER (TEST POINT)
E401	1-535-877-22	s	CHIP,CHECKER (TEST POINT)
E500	1-535-877-22	s	CHIP,CHECKER (TEST POINT)
E600	1-535-877-22	s	CHIP,CHECKER (TEST POINT)
E700	1-535-877-22	s	CHIP,CHECKER (TEST POINT)
E800	1-535-877-22	s	CHIP,CHECKER (TEST POINT)
F800	⚠ 1-576-270-11	s	FUSE CHIP 4A/125V (6125)
F802	⚠ 1-576-270-11	s	FUSE CHIP 4A/125V (6125)
F803	⚠ 1-576-270-11	s	FUSE CHIP 4A/125V (6125)
FB200	1-469-094-21	s	FERRITE, EMI (SMD)
FL200	1-239-898-22	s	FILTER, EMI (SMD)
FL600	1-233-674-21	s	FILTER, EMI
FL601	1-233-674-21	s	FILTER, EMI
IC100	8-759-549-15	s	IC SN74LV245APWR
IC101	8-759-549-15	s	IC SN74LV245APWR
IC102	8-759-523-84	s	IC TC74VHC14FT (EL)
IC103	8-759-491-46	s	IC TC74VHCT04AFT (EL)
IC104	8-759-491-46	s	IC TC74VHCT04AFT (EL)
IC105	8-759-523-94	s	IC TC74VHC32FT(EL)
IC106	8-759-549-01	s	IC SN74LV125APWR
IC107	8-759-392-77	s	IC SN74LVC245APW (E20)
IC108	8-759-549-15	s	IC SN74LV245APWR
IC109	8-759-524-07	s	IC TC74VHC138FT(EL)
IC110	8-759-549-15	s	IC SN74LV245APWR
IC111	8-759-491-46	s	IC TC74VHCT04AFT (EL)
IC112	8-759-549-15	s	IC SN74LV245APWR
IC113	8-759-549-15	s	IC SN74LV245APWR
IC114	8-759-549-15	s	IC SN74LV245APWR
IC115	8-759-549-15	s	IC SN74LV245APWR
IC116	8-759-549-15	s	IC SN74LV245APWR
IC117	8-759-549-15	s	IC SN74LV245APWR
IC118	8-759-524-07	s	IC TC74VHC138FT(EL)
IC119	8-759-524-07	s	IC TC74VHC138FT(EL)
IC120	8-759-523-81	s	IC TC74VHC08FT(EL)
IC121	6-706-487-01	s	IC TC7SH08FU(T5RSOYJF)
IC122	8-759-523-92	s	IC TC74VHC21FT(EL)
IC123	8-759-549-15	s	IC SN74LV245APWR
IC124	8-752-392-03	s	IC CXD1095BR
IC125	6-706-487-01	s	IC TC7SH08FU(T5RSOYJF)
IC126	6-706-482-01	s	IC TC7SH00FU(T5RSOYJF)
IC200	8-759-475-55	s	IC TC74LCX574FT(EL)
IC201	8-759-475-55	s	IC TC74LCX574FT(EL)
IC202	8-759-475-55	s	IC TC74LCX574FT(EL)
IC203	8-759-669-41	s	IC SN74LVC125APWR-12
IC204	6-706-484-01	s	IC TC7SH04FU(T5RSOYJF)
IC205	8-759-669-41	s	IC SN74LVC125APWR-12
IC208	8-759-392-77	s	IC SN74LVC245APW (E20)
IC209	8-759-392-77	s	IC SN74LVC245APW (E20)

(DPR-229HD BOARD [SUFFIX 14-])

Ref. No. or Q'ty	Part No.	SP	Description
IC210	8-759-392-77	s	IC SN74LVC245APW (E20)
IC211	6-705-983-01	s	IC IS42S32200B-6TL-TR
IC212	8-759-712-32	s	IC SN65LVDS389DBTR
IC213	8-759-712-32	s	IC SN65LVDS389DBTR
IC214	8-759-712-32	s	IC SN65LVDS389DBTR
IC217	6-706-484-01	s	IC TC7SH04FU(T5RSOYJF)
IC302	8-759-524-10	s	IC TC74VHC157FT (EL)
IC303	8-759-524-10	s	IC TC74VHC157FT (EL)
IC310	8-759-392-77	s	IC SN74LVC245APW (E20)
IC311	8-759-392-77	s	IC SN74LVC245APW (E20)
IC312	6-705-983-01	s	IC IS42S32200B-6TL-TR
IC401	8-759-669-41	s	IC SN74LVC125APWR-12
IC407	8-759-656-31	o	IC CXD9094AR
IC413	8-759-639-86	s	IC SN65LVDS32DR
IC500	8-759-199-86	s	IC CXD8807BR
IC501	8-759-549-15	s	IC SN74LV245APWR
IC502	8-759-549-15	s	IC SN74LV245APWR
IC506	8-752-373-24	s	IC CXK48324R-1-T6
IC507	8-752-373-24	s	IC CXK48324R-1-T6
IC508	8-752-373-24	s	IC CXK48324R-1-T6
IC509	8-752-373-24	s	IC CXK48324R-1-T6
IC510	8-752-373-24	s	IC CXK48324R-1-T6
IC601	8-759-524-09	s	IC TC74VHC153FT (EL)
IC602	8-759-475-55	s	IC TC74LCX574FT(EL)
IC603	8-759-475-55	s	IC TC74LCX574FT(EL)
IC653	8-759-549-15	s	IC SN74LV245APWR
IC654	8-759-549-15	s	IC SN74LV245APWR
IC655	8-759-664-03	s	IC LP3964EMPX-ADJ
IC700	8-752-392-03	s	IC CXD1095BR
IC701	6-702-254-01	s	IC DSPB56362PV100-1J21D
IC702	8-759-543-83	s	IC KM416V1204CT-L6
IC703	8-759-543-83	s	IC KM416V1204CT-L6
IC704	6-702-254-01	s	IC DSPB56362PV100-1J21D
IC705	8-759-543-83	s	IC KM416V1204CT-L6
IC706	8-759-543-83	s	IC KM416V1204CT-L6
IC707	6-702-254-01	s	IC DSPB56362PV100-1J21D
IC708	8-759-543-83	s	IC KM416V1204CT-L6
IC709	8-759-543-83	s	IC KM416V1204CT-L6
IC710	6-702-254-01	s	IC DSPB56362PV100-1J21D
IC711	8-759-543-83	s	IC KM416V1204CT-L6
IC712	8-759-543-83	s	IC KM416V1204CT-L6
IC801	8-759-549-15	s	IC SN74LV245APWR
IC802	6-706-487-01	s	IC TC7SH08FU(T5RSOYJF)
IC803	8-759-491-46	s	IC TC74VHCT04AFT (EL)
IC804	8-759-669-41	s	IC SN74LVC125APWR-12
IC805	8-759-475-43	s	IC TC74LCX125FT(EL)
IC808	8-759-549-15	s	IC SN74LV245APWR
IC809	8-759-523-78	s	IC TC74VHC00FT(EL)
IC810	8-759-392-77	s	IC SN74LVC245APW (E20)
IC812	8-759-669-41	s	IC SN74LVC125APWR-12
IC813	8-759-669-41	s	IC SN74LVC125APWR-12
IC814	8-759-669-41	s	IC SN74LVC125APWR-12
IC815	8-759-475-43	s	IC TC74LCX125FT(EL)
IC817	8-759-549-01	s	IC SN74LV125APWR
IC818	8-759-549-15	s	IC SN74LV245APWR
IC819	8-759-524-10	s	IC TC74VHC157FT (EL)
IC822	8-759-549-01	s	IC SN74LV125APWR
IC823	8-759-549-15	s	IC SN74LV245APWR
IC824	8-759-549-15	s	IC SN74LV245APWR

(DPR-229HD BOARD [SUFFIX 14-])

Ref. No. or Q'ty	Part No.	SP	Description
IC825	8-759-549-15	s	IC SN74LV245APWR
IC826	8-759-549-01	s	IC SN74LV125APWR
IC827	6-704-723-01	s	IC XCS20XL-4VQG100C
IC829	8-759-524-10	s	IC TC74VHC157FT (EL)
IC831	8-759-524-27	s	IC TC74VHC244FT(EL)
IC832	6-706-484-01	s	IC TC7SH04FU(T5RSOYJF)
IC833	6-803-242-02	s	IC XC18V02-DPR229IMX-V4.00
L100	1-412-056-11	s	INDUCTOR 4.7UH (3225)
L101	1-412-056-11	s	INDUCTOR 4.7UH (3225)
L102	1-412-056-11	s	INDUCTOR 4.7UH (3225)
L103	1-412-056-11	s	INDUCTOR 4.7UH (3225)
L200	1-412-056-11	s	INDUCTOR 4.7UH (3225)
L201	1-412-056-11	s	INDUCTOR 4.7UH (3225)
L202	1-412-056-11	s	INDUCTOR 4.7UH (3225)
L402	1-412-056-11	s	INDUCTOR 4.7UH (3225)
L600	1-412-056-11	s	INDUCTOR 4.7UH (3225)
L651	1-412-056-11	s	INDUCTOR 4.7UH (3225)
L800	1-419-630-11	s	COIL, CHOKE 4.7UH
L801	1-419-630-11	s	COIL, CHOKE 4.7UH
L802	1-419-630-11	s	COIL, CHOKE 4.7UH
L803	1-419-630-11	s	COIL, CHOKE 4.7UH
L804	1-412-056-11	s	INDUCTOR 4.7UH (3225)
L806	1-412-056-11	s	INDUCTOR 4.7UH (3225)
L807	1-412-056-11	s	INDUCTOR 4.7UH (3225)
L808	1-412-056-11	s	INDUCTOR 4.7UH (3225)
Q200	8-729-928-81	s	TRANSISTOR DTC144EE
Q800	8-729-928-81	s	TRANSISTOR DTC144EE
Q801	8-729-045-53	s	TRANSISTOR SI4431DY-T1
Q802	8-729-140-63	s	TRANSISTOR 2SA1611-M5M6
R100	1-218-895-11	s	RESISTOR,CHIP 100K 1/10W(1608)
R101	1-218-895-11	s	RESISTOR,CHIP 100K 1/10W(1608)
R102	1-218-895-11	s	RESISTOR,CHIP 100K 1/10W(1608)
R103	1-218-895-11	s	RESISTOR,CHIP 100K 1/10W(1608)
R105	1-218-895-11	s	RESISTOR,CHIP 100K 1/10W(1608)
R106	1-211-985-11	s	RESISTOR,CHIP 47 1/10W (1608)
R107	1-211-985-11	s	RESISTOR,CHIP 47 1/10W (1608)
R108	1-211-985-11	s	RESISTOR,CHIP 47 1/10W (1608)
R109	1-211-985-11	s	RESISTOR,CHIP 47 1/10W (1608)
R110	1-218-895-11	s	RESISTOR,CHIP 100K 1/10W(1608)
R111	1-218-823-11	s	RESISTOR,CHIP 100 1/10W (1608)
R117	1-218-863-11	s	RESISTOR,CHIP 4.7K 1/10W(1608)
R118	1-218-863-11	s	RESISTOR,CHIP 4.7K 1/10W(1608)
R122	1-218-863-11	s	RESISTOR,CHIP 4.7K 1/10W(1608)
R124	1-218-863-11	s	RESISTOR,CHIP 4.7K 1/10W(1608)
R125	1-218-863-11	s	RESISTOR,CHIP 4.7K 1/10W(1608)
R130	1-216-864-11	s	CONDUCTOR, CHIP (1608)
R131	1-216-864-11	s	CONDUCTOR, CHIP (1608)
R132	1-216-864-11	s	CONDUCTOR, CHIP (1608)
R133	1-216-864-11	s	CONDUCTOR, CHIP (1608)
R134	1-218-863-11	s	RESISTOR,CHIP 4.7K 1/10W(1608)
R136	1-211-977-11	s	RESISTOR,CHIP 22 1/10W (1608)
R138	1-218-895-11	s	RESISTOR,CHIP 100K 1/10W(1608)
R139	1-218-895-11	s	RESISTOR,CHIP 100K 1/10W(1608)
R141	1-216-864-11	s	CONDUCTOR, CHIP (1608)
R143	1-218-895-11	s	RESISTOR,CHIP 100K 1/10W(1608)
R144	1-211-977-11	s	RESISTOR,CHIP 22 1/10W (1608)
R200	1-218-831-11	s	RESISTOR, CHIP 220 1/10W(1608)
R202	1-216-864-11	s	CONDUCTOR, CHIP (1608)

(DPR-229HD BOARD [SUFFIX 14-])

Ref. No. or Q'ty	Part No.	SP	Description
R203	1-211-985-11	s	RESISTOR,CHIP 47 1/10W (1608)
R204	1-211-977-11	s	RESISTOR,CHIP 22 1/10W (1608)
R207	1-216-864-11	s	CONDUCTOR, CHIP (1608)
R208	1-218-871-11	s	RESISTOR,CHIP 10K 1/10W (1608)
R209	1-216-864-11	s	CONDUCTOR, CHIP (1608)
R210	1-216-864-11	s	CONDUCTOR, CHIP (1608)
R212	1-216-864-11	s	CONDUCTOR, CHIP (1608)
R213	1-216-864-11	s	CONDUCTOR, CHIP (1608)
R215	1-216-864-11	s	CONDUCTOR, CHIP (1608)
R216	1-216-864-11	s	CONDUCTOR, CHIP (1608)
R217	1-216-864-11	s	CONDUCTOR, CHIP (1608)
R218	1-211-977-11	s	RESISTOR,CHIP 22 1/10W (1608)
R219	1-218-863-11	s	RESISTOR,CHIP 4.7K 1/10W(1608)
R220	1-216-864-11	s	CONDUCTOR, CHIP (1608)
R221	1-216-864-11	s	CONDUCTOR, CHIP (1608)
R222	1-218-863-11	s	RESISTOR,CHIP 4.7K 1/10W(1608)
R300	1-216-864-11	s	CONDUCTOR, CHIP (1608)
R301	1-216-864-11	s	CONDUCTOR, CHIP (1608)
R302	1-216-864-11	s	CONDUCTOR, CHIP (1608)
R303	1-218-863-11	s	RESISTOR,CHIP 4.7K 1/10W(1608)
R304	1-218-863-11	s	RESISTOR,CHIP 4.7K 1/10W(1608)
R305	1-218-863-11	s	RESISTOR,CHIP 4.7K 1/10W(1608)
R306	1-218-895-11	s	RESISTOR,CHIP 100K 1/10W(1608)
R307	1-218-863-11	s	RESISTOR,CHIP 4.7K 1/10W(1608)
R338	1-218-863-11	s	RESISTOR,CHIP 4.7K 1/10W(1608)
R349	1-216-864-11	s	CONDUCTOR, CHIP (1608)
R351	1-211-977-11	s	RESISTOR,CHIP 22 1/10W (1608)
R352	1-211-977-11	s	RESISTOR,CHIP 22 1/10W (1608)
R353	1-218-863-11	s	RESISTOR,CHIP 4.7K 1/10W(1608)
R354	1-218-863-11	s	RESISTOR,CHIP 4.7K 1/10W(1608)
R355	1-218-863-11	s	RESISTOR,CHIP 4.7K 1/10W(1608)
R356	1-216-864-11	s	CONDUCTOR, CHIP (1608)
R357	1-218-895-11	s	RESISTOR,CHIP 100K 1/10W(1608)
R358	1-218-895-11	s	RESISTOR,CHIP 100K 1/10W(1608)
R359	1-211-977-11	s	RESISTOR,CHIP 22 1/10W (1608)
R400	1-218-895-11	s	RESISTOR,CHIP 100K 1/10W(1608)
R402	1-211-985-11	s	RESISTOR,CHIP 47 1/10W (1608)
R403	1-211-985-11	s	RESISTOR,CHIP 47 1/10W (1608)
R428	1-218-823-11	s	RESISTOR,CHIP 100 1/10W (1608)
R429	1-218-823-11	s	RESISTOR,CHIP 100 1/10W (1608)
R430	1-218-823-11	s	RESISTOR,CHIP 100 1/10W (1608)
R431	1-218-823-11	s	RESISTOR,CHIP 100 1/10W (1608)
R432	1-211-977-11	s	RESISTOR,CHIP 22 1/10W (1608)
R433	1-211-977-11	s	RESISTOR,CHIP 22 1/10W (1608)
R434	1-211-977-11	s	RESISTOR,CHIP 22 1/10W (1608)
R435	1-216-864-11	s	CONDUCTOR, CHIP (1608)
R436	1-216-864-11	s	CONDUCTOR, CHIP (1608)
R437	1-211-985-11	s	RESISTOR,CHIP 47 1/10W (1608)
R439	1-216-864-11	s	CONDUCTOR, CHIP (1608)
R440	1-218-895-11	s	RESISTOR,CHIP 100K 1/10W(1608)
R502	1-216-864-11	s	CONDUCTOR, CHIP (1608)
R503	1-216-864-11	s	CONDUCTOR, CHIP (1608)
R605	1-216-864-11	s	CONDUCTOR, CHIP (1608)
R606	1-216-864-11	s	CONDUCTOR, CHIP (1608)
R607	1-216-864-11	s	CONDUCTOR, CHIP (1608)
R620	1-218-895-11	s	RESISTOR,CHIP 100K 1/10W(1608)
R650	1-218-847-11	s	RESISTOR, CHIP 1K 1/10W (1608)
R652	1-216-864-11	s	CONDUCTOR, CHIP (1608)
R653	1-216-864-11	s	CONDUCTOR, CHIP (1608)

(DPR-229HD BOARD [SUFFIX 14-])

Ref. No. or Q'ty	Part No.	SP	Description
R654	1-216-864-11	s	CONDUCTOR, CHIP (1608)
R657	1-218-871-11	s	RESISTOR,CHIP 10K 1/10W (1608)
R658	1-216-864-11	s	CONDUCTOR, CHIP (1608)
R659	1-216-864-11	s	CONDUCTOR, CHIP (1608)
R660	1-216-864-11	s	CONDUCTOR, CHIP (1608)
R661	1-218-903-11	s	RESISTOR,CHIP 220K 1/10W(1608)
R662	1-218-878-11	s	RESISTOR,CHIP 20K 1/10W (1608)
R663	1-218-878-11	s	RESISTOR,CHIP 20K 1/10W (1608)
R666	1-211-990-11	s	RESISTOR,CHIP 75 1/10W (1608)
R668	1-211-990-11	s	RESISTOR,CHIP 75 1/10W (1608)
R670	1-218-903-11	s	RESISTOR,CHIP 220K 1/10W(1608)
R671	1-218-903-11	s	RESISTOR,CHIP 220K 1/10W(1608)
R672	1-218-871-11	s	RESISTOR,CHIP 10K 1/10W (1608)
R673	1-218-856-11	s	RESISTOR,CHIP 2.4K 1/10W(1608)
R674	1-218-871-11	s	RESISTOR,CHIP 10K 1/10W (1608)
R676	1-211-899-11	s	RESISTOR,CHIP 0.22 1/4W (3225)
R715	1-216-864-11	s	CONDUCTOR, CHIP (1608)
R716	1-216-864-11	s	CONDUCTOR, CHIP (1608)
R717	1-216-864-11	s	CONDUCTOR, CHIP (1608)
R718	1-216-864-11	s	CONDUCTOR, CHIP (1608)
R719	1-216-864-11	s	CONDUCTOR, CHIP (1608)
R720	1-216-864-11	s	CONDUCTOR, CHIP (1608)
R722	1-216-864-11	s	CONDUCTOR, CHIP (1608)
R723	1-216-864-11	s	CONDUCTOR, CHIP (1608)
R724	1-216-864-11	s	CONDUCTOR, CHIP (1608)
R725	1-216-864-11	s	CONDUCTOR, CHIP (1608)
R726	1-216-864-11	s	CONDUCTOR, CHIP (1608)
R727	1-216-864-11	s	CONDUCTOR, CHIP (1608)
R728	1-216-864-11	s	CONDUCTOR, CHIP (1608)
R729	1-216-864-11	s	CONDUCTOR, CHIP (1608)
R738	1-218-847-11	s	RESISTOR, CHIP 1K 1/10W (1608)
R739	1-218-847-11	s	RESISTOR, CHIP 1K 1/10W (1608)
R740	1-218-847-11	s	RESISTOR, CHIP 1K 1/10W (1608)
R748	1-216-864-11	s	CONDUCTOR, CHIP (1608)
R749	1-216-864-11	s	CONDUCTOR, CHIP (1608)
R750	1-216-864-11	s	CONDUCTOR, CHIP (1608)
R751	1-216-864-11	s	CONDUCTOR, CHIP (1608)
R752	1-216-864-11	s	CONDUCTOR, CHIP (1608)
R753	1-216-864-11	s	CONDUCTOR, CHIP (1608)
R755	1-216-864-11	s	CONDUCTOR, CHIP (1608)
R756	1-216-864-11	s	CONDUCTOR, CHIP (1608)
R757	1-216-864-11	s	CONDUCTOR, CHIP (1608)
R758	1-216-864-11	s	CONDUCTOR, CHIP (1608)
R759	1-216-864-11	s	CONDUCTOR, CHIP (1608)
R760	1-216-864-11	s	CONDUCTOR, CHIP (1608)
R761	1-216-864-11	s	CONDUCTOR, CHIP (1608)
R762	1-216-864-11	s	CONDUCTOR, CHIP (1608)
R771	1-218-847-11	s	RESISTOR, CHIP 1K 1/10W (1608)
R772	1-218-847-11	s	RESISTOR, CHIP 1K 1/10W (1608)
R773	1-218-847-11	s	RESISTOR, CHIP 1K 1/10W (1608)
R781	1-216-864-11	s	CONDUCTOR, CHIP (1608)
R782	1-216-864-11	s	CONDUCTOR, CHIP (1608)
R783	1-216-864-11	s	CONDUCTOR, CHIP (1608)
R784	1-216-864-11	s	CONDUCTOR, CHIP (1608)
R785	1-216-864-11	s	CONDUCTOR, CHIP (1608)
R786	1-216-864-11	s	CONDUCTOR, CHIP (1608)
R788	1-216-864-11	s	CONDUCTOR, CHIP (1608)
R789	1-216-864-11	s	CONDUCTOR, CHIP (1608)
R790	1-216-864-11	s	CONDUCTOR, CHIP (1608)

(DPR-229HD BOARD [SUFFIX 14-])

Ref. No. or Q'ty	Part No.	SP	Description
R791	1-216-864-11	s	CONDUCTOR, CHIP (1608)
R792	1-216-864-11	s	CONDUCTOR, CHIP (1608)
R793	1-216-864-11	s	CONDUCTOR, CHIP (1608)
R794	1-216-864-11	s	CONDUCTOR, CHIP (1608)
R795	1-216-864-11	s	CONDUCTOR, CHIP (1608)
R801	1-216-864-11	s	CONDUCTOR, CHIP (1608)
R802	1-216-864-11	s	CONDUCTOR, CHIP (1608)
R803	1-218-863-11	s	RESISTOR,CHIP 4.7K 1/10W(1608)
R805	1-218-863-11	s	RESISTOR,CHIP 4.7K 1/10W(1608)
R811	1-216-864-11	s	CONDUCTOR, CHIP (1608)
R813	1-218-831-11	s	RESISTOR, CHIP 220 1/10W(1608)
R814	1-218-831-11	s	RESISTOR, CHIP 220 1/10W(1608)
R815	1-218-831-11	s	RESISTOR, CHIP 220 1/10W(1608)
R820	1-211-977-11	s	RESISTOR,CHIP 22 1/10W (1608)
R822	1-211-977-11	s	RESISTOR,CHIP 22 1/10W (1608)
R823	1-211-977-11	s	RESISTOR,CHIP 22 1/10W (1608)
R824	1-211-977-11	s	RESISTOR,CHIP 22 1/10W (1608)
R825	1-211-977-11	s	RESISTOR,CHIP 22 1/10W (1608)
R826	1-211-977-11	s	RESISTOR,CHIP 22 1/10W (1608)
R828	1-211-977-11	s	RESISTOR,CHIP 22 1/10W (1608)
R831	1-211-977-11	s	RESISTOR,CHIP 22 1/10W (1608)
R834	1-218-895-11	s	RESISTOR,CHIP 100K 1/10W(1608)
R835	1-218-895-11	s	RESISTOR,CHIP 100K 1/10W(1608)
R839	1-216-864-11	s	CONDUCTOR, CHIP (1608)
R841	1-211-977-11	s	RESISTOR,CHIP 22 1/10W (1608)
R851	1-216-864-11	s	CONDUCTOR, CHIP (1608)
R854	1-211-977-11	s	RESISTOR,CHIP 22 1/10W (1608)
R855	1-211-977-11	s	RESISTOR,CHIP 22 1/10W (1608)
R856	1-211-977-11	s	RESISTOR,CHIP 22 1/10W (1608)
R857	1-211-977-11	s	RESISTOR,CHIP 22 1/10W (1608)
R858	1-211-977-11	s	RESISTOR,CHIP 22 1/10W (1608)
R860	1-211-977-11	s	RESISTOR,CHIP 22 1/10W (1608)
R861	1-211-977-11	s	RESISTOR,CHIP 22 1/10W (1608)
R862	1-211-977-11	s	RESISTOR,CHIP 22 1/10W (1608)
R863	1-218-871-11	s	RESISTOR,CHIP 10K 1/10W (1608)
R864	1-218-847-11	s	RESISTOR, CHIP 1K 1/10W (1608)
R865	1-218-847-11	s	RESISTOR, CHIP 1K 1/10W (1608)
R866	1-218-835-11	s	RESISTOR,CHIP 330 1/10W (1608)
R867	1-218-835-11	s	RESISTOR,CHIP 330 1/10W (1608)
R1004	1-218-847-11	s	RESISTOR, CHIP 1K 1/10W (1608)
R1005	1-218-847-11	s	RESISTOR, CHIP 1K 1/10W (1608)
R1006	1-218-847-11	s	RESISTOR, CHIP 1K 1/10W (1608)
R1014	1-216-864-11	s	CONDUCTOR, CHIP (1608)
R1015	1-216-864-11	s	CONDUCTOR, CHIP (1608)
R1016	1-216-864-11	s	CONDUCTOR, CHIP (1608)
R1017	1-216-864-11	s	CONDUCTOR, CHIP (1608)
R1018	1-216-864-11	s	CONDUCTOR, CHIP (1608)
R1019	1-216-864-11	s	CONDUCTOR, CHIP (1608)
R1021	1-216-864-11	s	CONDUCTOR, CHIP (1608)
R1022	1-216-864-11	s	CONDUCTOR, CHIP (1608)
R1023	1-216-864-11	s	CONDUCTOR, CHIP (1608)
R1024	1-216-864-11	s	CONDUCTOR, CHIP (1608)
R1025	1-216-864-11	s	CONDUCTOR, CHIP (1608)
R1026	1-216-864-11	s	CONDUCTOR, CHIP (1608)
R1027	1-216-864-11	s	CONDUCTOR, CHIP (1608)
R1028	1-216-864-11	s	CONDUCTOR, CHIP (1608)
R1037	1-216-864-11	s	CONDUCTOR, CHIP (1608)
R1038	1-216-864-11	s	CONDUCTOR, CHIP (1608)
R1039	1-216-864-11	s	CONDUCTOR, CHIP (1608)

(DPR-229HD BOARD [SUFFIX 14-])

Ref. No. or Q'ty	Part No.	SP	Description
R1040	1-216-864-11	s	CONDUCTOR, CHIP (1608)
R1042	1-218-847-11	s	RESISTOR, CHIP 1K 1/10W (1608)
R1043	1-218-847-11	s	RESISTOR, CHIP 1K 1/10W (1608)
R1044	1-218-847-11	s	RESISTOR, CHIP 1K 1/10W (1608)
R1052	1-218-895-11	s	RESISTOR,CHIP 100K 1/10W(1608)
R1053	1-218-895-11	s	RESISTOR,CHIP 100K 1/10W(1608)
R1054	1-216-864-11	s	CONDUCTOR, CHIP (1608)
R1055	1-216-864-11	s	CONDUCTOR, CHIP (1608)
R1056	1-216-864-11	s	CONDUCTOR, CHIP (1608)
RB100	1-233-810-21	s	RES, NETWORK 100K (3216)
RB101	1-233-810-21	s	RES, NETWORK 100K (3216)
RB102	1-239-409-11	s	RESISTOR NETWORK 47 (3216)
RB103	1-239-409-11	s	RESISTOR NETWORK 47 (3216)
RB104	1-233-810-21	s	RES, NETWORK 100K (3216)
RB106	1-234-397-11	s	NETWORK, RES (8 GANG) 100K
RB107	1-234-397-11	s	NETWORK, RES (8 GANG) 100K
RB108	1-233-575-11	s	RES, CHIP NETWORK 22
RB109	1-233-575-11	s	RES, CHIP NETWORK 22
RB110	1-233-575-11	s	RES, CHIP NETWORK 22
RB111	1-233-575-11	s	RES, CHIP NETWORK 22
RB112	1-233-575-11	s	RES, CHIP NETWORK 22
RB113	1-234-397-11	s	NETWORK, RES (8 GANG) 100K
RB114	1-233-576-11	s	RESISTOR,CHIP NETWORK 100
RB115	1-233-576-11	s	RESISTOR,CHIP NETWORK 100
RB116	1-233-810-21	s	RES, NETWORK 100K (3216)
RB117	1-234-397-11	s	NETWORK, RES (8 GANG) 100K
RB118	1-234-397-11	s	NETWORK, RES (8 GANG) 100K
RB119	1-234-397-11	s	NETWORK, RES (8 GANG) 100K
RB120	1-234-397-11	s	NETWORK, RES (8 GANG) 100K
RB121	1-233-576-11	s	RESISTOR,CHIP NETWORK 100
RB122	1-233-576-11	s	RESISTOR,CHIP NETWORK 100
RB123	1-234-397-11	s	NETWORK, RES (8 GANG) 100K
RB200	1-233-411-11	s	RESISTOR,CHIP NETWORK 220/3216
RB201	1-233-411-11	s	RESISTOR,CHIP NETWORK 220/3216
RB202	1-233-411-11	s	RESISTOR,CHIP NETWORK 220/3216
RB203	1-233-411-11	s	RESISTOR,CHIP NETWORK 220/3216
RB204	1-233-411-11	s	RESISTOR,CHIP NETWORK 220/3216
RB205	1-233-575-11	s	RES, CHIP NETWORK 22
RB206	1-233-575-11	s	RES, CHIP NETWORK 22
RB213	1-239-409-11	s	RESISTOR NETWORK 47 (3216)
RB214	1-239-409-11	s	RESISTOR NETWORK 47 (3216)
RB215	1-239-409-11	s	RESISTOR NETWORK 47 (3216)
RB216	1-239-409-11	s	RESISTOR NETWORK 47 (3216)
RB217	1-239-409-11	s	RESISTOR NETWORK 47 (3216)
RB218	1-239-409-11	s	RESISTOR NETWORK 47 (3216)
RB300	1-233-810-21	s	RES, NETWORK 100K (3216)
RB500	1-233-414-11	s	RESISTOR,CHIP NETWORK 4.7K
RB501	1-233-412-11	s	RESISTOR,CHIP NETWORK 1K
RB502	1-233-412-11	s	RESISTOR,CHIP NETWORK 1K
RB503	1-233-412-11	s	RESISTOR,CHIP NETWORK 1K
RB504	1-233-412-11	s	RESISTOR,CHIP NETWORK 1K
RB505	1-233-412-11	s	RESISTOR,CHIP NETWORK 1K
RB506	1-233-412-11	s	RESISTOR,CHIP NETWORK 1K
RB507	1-233-412-11	s	RESISTOR,CHIP NETWORK 1K
RB508	1-233-412-11	s	RESISTOR,CHIP NETWORK 1K
RB509	1-233-412-11	s	RESISTOR,CHIP NETWORK 1K
RB510	1-233-412-11	s	RESISTOR,CHIP NETWORK 1K
RB511	1-233-412-11	s	RESISTOR,CHIP NETWORK 1K
RB512	1-233-412-11	s	RESISTOR,CHIP NETWORK 1K

(DPR-229HD BOARD [SUFFIX 14-])

Ref. No. or Q'ty	Part No.	SP	Description
RB513	1-233-412-11	s	RESISTOR,CHIP NETWORK 1K
RB514	1-233-412-11	s	RESISTOR,CHIP NETWORK 1K
RB515	1-233-412-11	s	RESISTOR,CHIP NETWORK 1K
RB516	1-234-523-21	s	RESISTOR,CHIP NETWORK
RB517	1-234-523-21	s	RESISTOR,CHIP NETWORK
RB518	1-234-523-21	s	RESISTOR,CHIP NETWORK
RB600	1-234-523-21	s	RESISTOR,CHIP NETWORK
RB601	1-234-523-21	s	RESISTOR,CHIP NETWORK
RB602	1-234-523-21	s	RESISTOR,CHIP NETWORK
RB700	1-233-810-21	s	RES, NETWORK 100K (3216)
RB701	1-233-810-21	s	RES, NETWORK 100K (3216)
RB702	1-233-810-21	s	RES, NETWORK 100K (3216)
RB703	1-233-810-21	s	RES, NETWORK 100K (3216)
RB704	1-233-810-21	s	RES, NETWORK 100K (3216)
RB705	1-233-810-21	s	RES, NETWORK 100K (3216)
RB706	1-233-810-21	s	RES, NETWORK 100K (3216)
RB707	1-233-810-21	s	RES, NETWORK 100K (3216)
RB708	1-233-810-21	s	RES, NETWORK 100K (3216)
RB709	1-234-397-11	s	NETWORK, RES (8 GANG) 100K
RB710	1-234-397-11	s	NETWORK, RES (8 GANG) 100K
RB711	1-234-397-11	s	NETWORK, RES (8 GANG) 100K
RB712	1-234-397-11	s	NETWORK, RES (8 GANG) 100K
RB801	1-233-810-21	s	RES, NETWORK 100K (3216)
RB804	1-233-411-11	s	RESISTOR,CHIP NETWORK 220/3216
RB805	1-233-411-11	s	RESISTOR,CHIP NETWORK 220/3216
RB806	1-233-411-11	s	RESISTOR,CHIP NETWORK 220/3216
RB807	1-233-414-11	s	RESISTOR,CHIP NETWORK 4.7K
RB808	1-239-409-11	s	RESISTOR NETWORK 47 (3216)
RB809	1-239-409-11	s	RESISTOR NETWORK 47 (3216)
RB810	1-239-409-11	s	RESISTOR NETWORK 47 (3216)
RB811	1-239-409-11	s	RESISTOR NETWORK 47 (3216)
RB812	1-239-409-11	s	RESISTOR NETWORK 47 (3216)
RB813	1-233-810-21	s	RES, NETWORK 100K (3216)
RB814	1-233-810-21	s	RES, NETWORK 100K (3216)
RB815	1-233-810-21	s	RES, NETWORK 100K (3216)
RB816	1-233-810-21	s	RES, NETWORK 100K (3216)
RB817	1-233-414-11	s	RESISTOR,CHIP NETWORK 4.7K
RB818	1-236-908-11	s	RESISTOR,NETWORK 10K (3216)
X200	1-781-809-21	s	OSCILLATOR, CRYSTAL (SMD)

DPR-229HS BOARD [SUFFIX 13]

[Lot No. 462 - 554] [SUFFIX 13] HDW-S2000/P

Ref. No. or Q'ty	Part No.	SP	Description
1pc	A-1061-234-A	s	MOUNTED CIRCUIT BOARD, DPR-229HS
4pcs	3-191-747-01	o	SUPPORT (M3), HEXAGON
8pcs	7-682-545-04	s	SCREW +B3X4
1pc	3-179-084-11	s	LEVER (R), C BOARD
1pc	3-179-085-11	s	LEVER (L), C BOARD
C100	1-131-992-11	s	CAP, CERAMIC 100000PF F 1608
C101	1-131-992-11	s	CAP, CERAMIC 100000PF F 1608
C102	1-162-927-11	s	CAPACITOR,CERAMIC 100PF/50V CH
C103	1-126-394-11	s	CAPACITOR,ELECT 10MF/16V(CHIP)
C104	1-131-992-11	s	CAP, CERAMIC 100000PF F 1608
C105	1-131-992-11	s	CAP, CERAMIC 100000PF F 1608
C106	1-131-992-11	s	CAP, CERAMIC 100000PF F 1608
C107	1-131-992-11	s	CAP, CERAMIC 100000PF F 1608
C108	1-131-992-11	s	CAP, CERAMIC 100000PF F 1608
C109	1-131-992-11	s	CAP, CERAMIC 100000PF F 1608
C110	1-131-992-11	s	CAP, CERAMIC 100000PF F 1608
C111	1-131-992-11	s	CAP, CERAMIC 100000PF F 1608
C112	1-131-992-11	s	CAP, CERAMIC 100000PF F 1608
C113	1-131-992-11	s	CAP, CERAMIC 100000PF F 1608
C114	1-131-992-11	s	CAP, CERAMIC 100000PF F 1608
C115	1-131-992-11	s	CAP, CERAMIC 100000PF F 1608
C116	1-131-992-11	s	CAP, CERAMIC 100000PF F 1608
C117	1-131-992-11	s	CAP, CERAMIC 100000PF F 1608
C118	1-131-992-11	s	CAP, CERAMIC 100000PF F 1608
C119	1-131-992-11	s	CAP, CERAMIC 100000PF F 1608
C120	1-131-992-11	s	CAP, CERAMIC 100000PF F 1608
C121	1-131-992-11	s	CAP, CERAMIC 100000PF F 1608
C122	1-131-992-11	s	CAP, CERAMIC 100000PF F 1608
C123	1-131-992-11	s	CAP, CERAMIC 100000PF F 1608
C124	1-131-992-11	s	CAP, CERAMIC 100000PF F 1608
C125	1-131-992-11	s	CAP, CERAMIC 100000PF F 1608
C126	1-131-992-11	s	CAP, CERAMIC 100000PF F 1608
C127	1-131-992-11	s	CAP, CERAMIC 100000PF F 1608
C200	1-126-394-11	s	CAPACITOR,ELECT 10MF/16V(CHIP)
C201	1-131-992-11	s	CAP, CERAMIC 100000PF F 1608
C202	1-131-992-11	s	CAP, CERAMIC 100000PF F 1608
C203	1-131-992-11	s	CAP, CERAMIC 100000PF F 1608
C204	1-126-394-11	s	CAPACITOR,ELECT 10MF/16V(CHIP)
C205	1-131-992-11	s	CAP, CERAMIC 100000PF F 1608
C206	1-131-992-11	s	CAP, CERAMIC 100000PF F 1608
C207	1-126-394-11	s	CAPACITOR,ELECT 10MF/16V(CHIP)
C208	1-131-992-11	s	CAP, CERAMIC 100000PF F 1608
C209	1-131-992-11	s	CAP, CERAMIC 100000PF F 1608
C210	1-131-992-11	s	CAP, CERAMIC 100000PF F 1608
C211	1-127-692-11	s	CAP, CHIP CERAMIC 10MF B 3216
C212	1-127-692-11	s	CAP, CHIP CERAMIC 10MF B 3216
C213	1-131-992-11	s	CAP, CERAMIC 100000PF F 1608
C214	1-131-992-11	s	CAP, CERAMIC 100000PF F 1608
C215	1-131-992-11	s	CAP, CERAMIC 100000PF F 1608
C216	1-131-992-11	s	CAP, CERAMIC 100000PF F 1608
C217	1-131-992-11	s	CAP, CERAMIC 100000PF F 1608
C218	1-131-992-11	s	CAP, CERAMIC 100000PF F 1608
C219	1-131-992-11	s	CAP, CERAMIC 100000PF F 1608
C220	1-131-992-11	s	CAP, CERAMIC 100000PF F 1608
C221	1-131-992-11	s	CAP, CERAMIC 100000PF F 1608
C222	1-131-992-11	s	CAP, CERAMIC 100000PF F 1608
C223	1-131-992-11	s	CAP, CERAMIC 100000PF F 1608

(DPR-229HS BOARD [SUFFIX 13])

Ref. No. or Q'ty	Part No.	SP	Description
C224	1-131-992-11	s	CAP, CERAMIC 100000PF F 1608
C225	1-131-992-11	s	CAP, CERAMIC 100000PF F 1608
C226	1-131-992-11	s	CAP, CERAMIC 100000PF F 1608
C227	1-131-992-11	s	CAP, CERAMIC 100000PF F 1608
C228	1-131-992-11	s	CAP, CERAMIC 100000PF F 1608
C230	1-126-394-11	s	CAPACITOR,ELECT 10MF/16V(CHIP)
C231	1-131-992-11	s	CAP, CERAMIC 100000PF F 1608
C232	1-131-992-11	s	CAP, CERAMIC 100000PF F 1608
C233	1-131-992-11	s	CAP, CERAMIC 100000PF F 1608
C234	1-131-992-11	s	CAP, CERAMIC 100000PF F 1608
C235	1-131-992-11	s	CAP, CERAMIC 100000PF F 1608
C300	1-131-992-11	s	CAP, CERAMIC 100000PF F 1608
C301	1-131-992-11	s	CAP, CERAMIC 100000PF F 1608
C302	1-131-992-11	s	CAP, CERAMIC 100000PF F 1608
C303	1-131-992-11	s	CAP, CERAMIC 100000PF F 1608
C304	1-126-394-11	s	CAPACITOR,ELECT 10MF/16V(CHIP)
C305	1-131-992-11	s	CAP, CERAMIC 100000PF F 1608
C306	1-131-992-11	s	CAP, CERAMIC 100000PF F 1608
C307	1-131-992-11	s	CAP, CERAMIC 100000PF F 1608
C308	1-131-992-11	s	CAP, CERAMIC 100000PF F 1608
C309	1-131-992-11	s	CAP, CERAMIC 100000PF F 1608
C310	1-131-992-11	s	CAP, CERAMIC 100000PF F 1608
C311	1-131-992-11	s	CAP, CERAMIC 100000PF F 1608
C312	1-131-992-11	s	CAP, CERAMIC 100000PF F 1608
C313	1-131-992-11	s	CAP, CERAMIC 100000PF F 1608
C314	1-126-394-11	s	CAPACITOR,ELECT 10MF/16V(CHIP)
C315	1-131-992-11	s	CAP, CERAMIC 100000PF F 1608
C316	1-131-992-11	s	CAP, CERAMIC 100000PF F 1608
C320	1-131-992-11	s	CAP, CERAMIC 100000PF F 1608
C321	1-131-992-11	s	CAP, CERAMIC 100000PF F 1608
C322	1-131-992-11	s	CAP, CERAMIC 100000PF F 1608
C323	1-131-992-11	s	CAP, CERAMIC 100000PF F 1608
C324	1-131-992-11	s	CAP, CERAMIC 100000PF F 1608
C325	1-131-992-11	s	CAP, CERAMIC 100000PF F 1608
C326	1-131-992-11	s	CAP, CERAMIC 100000PF F 1608
C327	1-131-992-11	s	CAP, CERAMIC 100000PF F 1608
C328	1-131-992-11	s	CAP, CERAMIC 100000PF F 1608
C329	1-131-992-11	s	CAP, CERAMIC 100000PF F 1608
C330	1-131-992-11	s	CAP, CERAMIC 100000PF F 1608
C331	1-126-394-11	s	CAPACITOR,ELECT 10MF/16V(CHIP)
C332	1-131-992-11	s	CAP, CERAMIC 100000PF F 1608
C333	1-131-992-11	s	CAP, CERAMIC 100000PF F 1608
C334	1-131-992-11	s	CAP, CERAMIC 100000PF F 1608
C335	1-131-992-11	s	CAP, CERAMIC 100000PF F 1608
C336	1-131-992-11	s	CAP, CERAMIC 100000PF F 1608
C337	1-131-992-11	s	CAP, CERAMIC 100000PF F 1608
C338	1-131-992-11	s	CAP, CERAMIC 100000PF F 1608
C339	1-131-992-11	s	CAP, CERAMIC 100000PF F 1608
C404	1-131-992-11	s	CAP, CERAMIC 100000PF F 1608
C412	1-126-394-11	s	CAPACITOR,ELECT 10MF/16V(CHIP)
C413	1-131-992-11	s	CAP, CERAMIC 100000PF F 1608
C440	1-131-992-11	s	CAP, CERAMIC 100000PF F 1608
C606	1-131-992-11	s	CAP, CERAMIC 100000PF F 1608
C607	1-126-394-11	s	CAPACITOR,ELECT 10MF/16V(CHIP)
C608	1-131-992-11	s	CAP, CERAMIC 100000PF F 1608
C609	1-131-992-11	s	CAP, CERAMIC 100000PF F 1608
C664	1-165-870-21	s	CAPACITOR, ELECT 100MF(6.3X6)
C685	1-162-925-11	s	CAPACITOR,CERAMIC 68PF/50V CH
C686	1-165-872-21	s	CAPACITOR,SOLID ELECT 47MF

(DPR-229HS BOARD [SUFFIX 13])

Ref. No. or Q'ty	Part No.	SP	Description
C700	1-131-992-11	s	CAP, CERAMIC 100000PF F 1608
C701	1-113-503-11	s	CAPACITOR,CERAMIC 3900PF CH
C702	1-162-968-11	s	CAPACITOR,CERAMIC 4700PF/50V B
C703	1-131-992-11	s	CAP, CERAMIC 100000PF F 1608
C704	1-131-992-11	s	CAP, CERAMIC 100000PF F 1608
C705	1-131-992-11	s	CAP, CERAMIC 100000PF F 1608
C706	1-131-992-11	s	CAP, CERAMIC 100000PF F 1608
C707	1-131-992-11	s	CAP, CERAMIC 100000PF F 1608
C708	1-131-992-11	s	CAP, CERAMIC 100000PF F 1608
C709	1-131-992-11	s	CAP, CERAMIC 100000PF F 1608
C710	1-131-992-11	s	CAP, CERAMIC 100000PF F 1608
C711	1-131-992-11	s	CAP, CERAMIC 100000PF F 1608
C712	1-131-992-11	s	CAP, CERAMIC 100000PF F 1608
C713	1-113-503-11	s	CAPACITOR,CERAMIC 3900PF CH
C714	1-162-968-11	s	CAPACITOR,CERAMIC 4700PF/50V B
C715	1-131-992-11	s	CAP, CERAMIC 100000PF F 1608
C716	1-131-992-11	s	CAP, CERAMIC 100000PF F 1608
C717	1-131-992-11	s	CAP, CERAMIC 100000PF F 1608
C718	1-131-992-11	s	CAP, CERAMIC 100000PF F 1608
C719	1-131-992-11	s	CAP, CERAMIC 100000PF F 1608
C720	1-131-992-11	s	CAP, CERAMIC 100000PF F 1608
C721	1-131-992-11	s	CAP, CERAMIC 100000PF F 1608
C722	1-131-992-11	s	CAP, CERAMIC 100000PF F 1608
C723	1-131-992-11	s	CAP, CERAMIC 100000PF F 1608
C724	1-131-992-11	s	CAP, CERAMIC 100000PF F 1608
C810	1-131-992-11	s	CAP, CERAMIC 100000PF F 1608
C811	1-131-992-11	s	CAP, CERAMIC 100000PF F 1608
C812	1-128-590-11	s	CAPACITOR ELECT 100MF/6.3V(105
C813	1-128-590-11	s	CAPACITOR ELECT 100MF/6.3V(105
C814	1-131-992-11	s	CAP, CERAMIC 100000PF F 1608
C815	1-131-992-11	s	CAP, CERAMIC 100000PF F 1608
C816	1-131-992-11	s	CAP, CERAMIC 100000PF F 1608
C817	1-131-992-11	s	CAP, CERAMIC 100000PF F 1608
C818	1-131-992-11	s	CAP, CERAMIC 100000PF F 1608
C819	1-128-590-11	s	CAPACITOR ELECT 100MF/6.3V(105
C820	1-128-590-11	s	CAPACITOR ELECT 100MF/6.3V(105
C821	1-128-590-11	s	CAPACITOR ELECT 100MF/6.3V(105
C822	1-128-590-11	s	CAPACITOR ELECT 100MF/6.3V(105
C823	1-131-992-11	s	CAP, CERAMIC 100000PF F 1608
C827	1-131-992-11	s	CAP, CERAMIC 100000PF F 1608
C829	1-131-992-11	s	CAP, CERAMIC 100000PF F 1608
C831	1-131-992-11	s	CAP, CERAMIC 100000PF F 1608
C832	1-131-992-11	s	CAP, CERAMIC 100000PF F 1608
C833	1-131-992-11	s	CAP, CERAMIC 100000PF F 1608
C834	1-131-992-11	s	CAP, CERAMIC 100000PF F 1608
C835	1-131-992-11	s	CAP, CERAMIC 100000PF F 1608
C837	1-131-992-11	s	CAP, CERAMIC 100000PF F 1608
C838	1-131-992-11	s	CAP, CERAMIC 100000PF F 1608
C839	1-126-394-11	s	CAPACITOR,ELECT 10MF/16V(CHIP)
C842	1-131-992-11	s	CAP, CERAMIC 100000PF F 1608
C843	1-131-992-11	s	CAP, CERAMIC 100000PF F 1608
C844	1-131-992-11	s	CAP, CERAMIC 100000PF F 1608
C845	1-131-992-11	s	CAP, CERAMIC 100000PF F 1608
C846	1-131-992-11	s	CAP, CERAMIC 100000PF F 1608
C847	1-131-992-11	s	CAP, CERAMIC 100000PF F 1608
C848	1-126-394-11	s	CAPACITOR,ELECT 10MF/16V(CHIP)
C849	1-126-394-11	s	CAPACITOR,ELECT 10MF/16V(CHIP)
C850	1-131-992-11	s	CAP, CERAMIC 100000PF F 1608
C851	1-131-992-11	s	CAP, CERAMIC 100000PF F 1608

(DPR-229HS BOARD [SUFFIX 13])

Ref. No. or Q'ty	Part No.	SP	Description
C852	1-131-992-11	s	CAP, CERAMIC 100000PF F 1608
C853	1-126-394-11	s	CAPACITOR,ELECT 10MF/16V(CHIP)
C862	1-131-992-11	s	CAP, CERAMIC 100000PF F 1608
C863	1-131-992-11	s	CAP, CERAMIC 100000PF F 1608
C864	1-131-992-11	s	CAP, CERAMIC 100000PF F 1608
C865	1-131-992-11	s	CAP, CERAMIC 100000PF F 1608
C867	1-127-861-11	s	CAP, CERAMIC 2.2MF B (3216)
C868	1-127-861-11	s	CAP, CERAMIC 2.2MF B (3216)
C869	1-131-992-11	s	CAP, CERAMIC 100000PF F 1608
C912	1-131-992-11	s	CAP, CERAMIC 100000PF F 1608
C913	1-126-394-11	s	CAPACITOR,ELECT 10MF/16V(CHIP)
C914	1-126-394-11	s	CAPACITOR,ELECT 10MF/16V(CHIP)
C915	1-131-992-11	s	CAP, CERAMIC 100000PF F 1608
C916	1-131-992-11	s	CAP, CERAMIC 100000PF F 1608
C917	1-131-992-11	s	CAP, CERAMIC 100000PF F 1608
C918	1-131-992-11	s	CAP, CERAMIC 100000PF F 1608
C919	1-131-992-11	s	CAP, CERAMIC 100000PF F 1608
C920	1-131-992-11	s	CAP, CERAMIC 100000PF F 1608
C921	1-131-992-11	s	CAP, CERAMIC 100000PF F 1608
C922	1-131-992-11	s	CAP, CERAMIC 100000PF F 1608
C923	1-131-992-11	s	CAP, CERAMIC 100000PF F 1608
C924	1-131-992-11	s	CAP, CERAMIC 100000PF F 1608
C925	1-131-992-11	s	CAP, CERAMIC 100000PF F 1608
C926	1-131-992-11	s	CAP, CERAMIC 100000PF F 1608
C927	1-131-992-11	s	CAP, CERAMIC 100000PF F 1608
C928	1-131-992-11	s	CAP, CERAMIC 100000PF F 1608
C929	1-131-992-11	s	CAP, CERAMIC 100000PF F 1608
C930	1-131-992-11	s	CAP, CERAMIC 100000PF F 1608
C931	1-131-992-11	s	CAP, CERAMIC 100000PF F 1608
C932	1-131-992-11	s	CAP, CERAMIC 100000PF F 1608
C933	1-131-992-11	s	CAP, CERAMIC 100000PF F 1608
C934	1-131-992-11	s	CAP, CERAMIC 100000PF F 1608
C935	1-131-992-11	s	CAP, CERAMIC 100000PF F 1608
C936	1-131-992-11	s	CAP, CERAMIC 100000PF F 1608
C937	1-131-992-11	s	CAP, CERAMIC 100000PF F 1608
C938	1-131-992-11	s	CAP, CERAMIC 100000PF F 1608
C939	1-131-992-11	s	CAP, CERAMIC 100000PF F 1608
CN16	1-580-789-91	s	PIN, CONNECTOR 6P
E100	1-535-877-22	s	CHIP,CHECKER (TEST POINT)
E200	1-535-877-22	s	CHIP,CHECKER (TEST POINT)
E300	1-535-877-22	s	CHIP,CHECKER (TEST POINT)
E400	1-535-877-22	s	CHIP,CHECKER (TEST POINT)
E401	1-535-877-22	s	CHIP,CHECKER (TEST POINT)
E600	1-535-877-22	s	CHIP,CHECKER (TEST POINT)
E700	1-535-877-22	s	CHIP,CHECKER (TEST POINT)
E800	1-535-877-22	s	CHIP,CHECKER (TEST POINT)
F800	⚠ 1-576-270-11	s	FUSE CHIP 4A/125V (6125)
F802	⚠ 1-576-270-11	s	FUSE CHIP 4A/125V (6125)
F803	⚠ 1-576-270-11	s	FUSE CHIP 4A/125V (6125)
FB200	1-469-094-11	s	FERRITE, EMI (SMD)
FL200	1-239-898-22	s	FILTER, EMI (SMD)
FL600	1-233-674-21	s	FILTER, EMI
FL601	1-233-674-21	s	FILTER, EMI
IC100	8-759-549-15	s	IC SN74LV245APWR
IC101	8-759-549-15	s	IC SN74LV245APWR
IC102	8-759-523-84	s	IC TC74VHC14FT (EL)

(DPR-229HS BOARD [SUFFIX 13])

Ref. No. or Q'ty	Part No.	SP	Description
IC103	8-759-491-46	s	IC TC74VHCT04AFT (EL)
IC104	8-759-491-46	s	IC TC74VHCT04AFT (EL)
IC105	8-759-523-94	s	IC TC74VHC32FT(EL)
IC106	8-759-549-01	s	IC SN74LV125APWR
IC107	8-759-392-77	s	IC SN74LVC245APW (E20)
IC108	8-759-549-15	s	IC SN74LV245APWR
IC109	8-759-524-07	s	IC TC74VHC138FT(EL)
IC110	8-759-549-15	s	IC SN74LV245APWR
IC111	8-759-491-46	s	IC TC74VHCT04AFT (EL)
IC112	8-759-549-15	s	IC SN74LV245APWR
IC113	8-759-549-15	s	IC SN74LV245APWR
IC114	8-759-549-15	s	IC SN74LV245APWR
IC115	8-759-549-15	s	IC SN74LV245APWR
IC116	8-759-549-15	s	IC SN74LV245APWR
IC117	8-759-549-15	s	IC SN74LV245APWR
IC118	8-759-524-07	s	IC TC74VHC138FT(EL)
IC119	8-759-524-07	s	IC TC74VHC138FT(EL)
IC120	8-759-523-81	s	IC TC74VHC08FT(EL)
IC121	6-706-487-01	s	IC TC7SH08FU(T5RSOYJF)
IC122	8-759-523-92	s	IC TC74VHC21FT(EL)
IC123	8-759-549-15	s	IC SN74LV245APWR
IC124	8-752-392-03	s	IC CXD1095BR
IC125	6-706-487-01	s	IC TC7SH08FU(T5RSOYJF)
IC126	6-706-482-01	s	IC TC7SH00FU(T5RSOYJF)
IC200	8-759-475-55	s	IC TC74LCX574FT(EL)
IC201	8-759-475-55	s	IC TC74LCX574FT(EL)
IC202	8-759-475-55	s	IC TC74LCX574FT(EL)
IC203	8-759-669-41	s	IC SN74LVC125APWR-12
IC204	6-706-484-01	s	IC TC7SH04FU(T5RSOYJF)
IC205	8-759-669-41	s	IC SN74LVC125APWR-12
IC208	8-759-392-77	s	IC SN74LVC245APW (E20)
IC209	8-759-392-77	s	IC SN74LVC245APW (E20)
IC210	8-759-392-77	s	IC SN74LVC245APW (E20)
IC212	8-759-712-32	s	IC SN65LVDS389DBTR
IC213	8-759-712-32	s	IC SN65LVDS389DBTR
IC214	8-759-712-32	s	IC SN65LVDS389DBTR
IC217	6-706-484-01	s	IC TC7SH04FU(T5RSOYJF)
IC301	8-759-449-09	s	IC CXD8945BR
IC302	8-759-524-10	s	IC TC74VHC157FT (EL)
IC303	8-759-524-10	s	IC TC74VHC157FT (EL)
IC307	6-700-497-01	s	IC MSM56V16800F-10TS-K
IC308	6-700-497-01	s	IC MSM56V16800F-10TS-K
IC309	6-700-497-01	s	IC MSM56V16800F-10TS-K
IC310	8-759-392-77	s	IC SN74LVC245APW (E20)
IC311	8-759-392-77	s	IC SN74LVC245APW (E20)
IC401	8-759-669-41	s	IC SN74LVC125APWR-12
IC413	8-759-639-86	s	IC SN65LVDS32DR
IC601	8-759-524-09	s	IC TC74VHC153FT (EL)
IC602	8-759-475-55	s	IC TC74LCX574FT(EL)
IC603	8-759-475-55	s	IC TC74LCX574FT(EL)
IC655	8-759-664-03	s	IC LP3964EMPX-ADJ
IC700	8-752-392-03	s	IC CXD1095BR
IC701	6-702-254-01	s	IC DSPB56362PV100-1J21D
IC702	8-759-543-83	s	IC KM416V1204CT-L6
IC703	8-759-543-83	s	IC KM416V1204CT-L6
IC704	6-702-254-01	s	IC DSPB56362PV100-1J21D
IC705	8-759-543-83	s	IC KM416V1204CT-L6

(DPR-229HS BOARD [SUFFIX 13])

Ref. No. or Q'ty	Part No.	SP	Description
IC706	8-759-543-83	s	IC KM416V1204CT-L6
IC801	8-759-549-15	s	IC SN74LV245APWR
IC802	6-706-487-01	s	IC TC7SH08FU(T5RSOYJF)
IC803	8-759-491-46	s	IC TC74VHCT04AFT (EL)
IC804	8-759-669-41	s	IC SN74LVC125APWR-12
IC805	8-759-475-43	s	IC TC74LCX125FT(EL)
IC808	8-759-549-15	s	IC SN74LV245APWR
IC809	8-759-523-78	s	IC TC74VHC00FT(EL)
IC810	8-759-392-77	s	IC SN74LVC245APW (E20)
IC812	8-759-669-41	s	IC SN74LVC125APWR-12
IC813	8-759-669-41	s	IC SN74LVC125APWR-12
IC814	8-759-669-41	s	IC SN74LVC125APWR-12
IC815	8-759-475-43	s	IC TC74LCX125FT(EL)
IC817	8-759-549-01	s	IC SN74LV125APWR
IC818	8-759-549-15	s	IC SN74LV245APWR
IC819	8-759-524-10	s	IC TC74VHC157FT (EL)
IC822	8-759-549-01	s	IC SN74LV125APWR
IC823	8-759-549-15	s	IC SN74LV245APWR
IC824	8-759-549-15	s	IC SN74LV245APWR
IC825	8-759-549-15	s	IC SN74LV245APWR
IC826	8-759-549-01	s	IC SN74LV125APWR
IC829	8-759-524-10	s	IC TC74VHC157FT (EL)
IC831	8-759-524-27	s	IC TC74VHC244FT(EL)
IC832	6-706-484-01	s	IC TC7SH04FU(T5RSOYJF)
IC833	6-803-242-02	s	IC XC18V02-DPR229IMX-V4.00
IC834	6-803-243-03	s	IC XC18V02-DPR229SX-V3.01
IC902	6-802-024-01	s	IC CXD9012BR
IC903	8-759-549-15	s	IC SN74LV245APWR
IC904	8-759-549-15	s	IC SN74LV245APWR
L100	1-412-056-11	s	INDUCTOR 4.7UH (3225)
L101	1-412-056-11	s	INDUCTOR 4.7UH (3225)
L102	1-412-056-11	s	INDUCTOR 4.7UH (3225)
L103	1-412-056-11	s	INDUCTOR 4.7UH (3225)
L200	1-412-056-11	s	INDUCTOR 4.7UH (3225)
L201	1-412-056-11	s	INDUCTOR 4.7UH (3225)
L202	1-412-056-11	s	INDUCTOR 4.7UH (3225)
L402	1-412-056-11	s	INDUCTOR 4.7UH (3225)
L600	1-412-056-11	s	INDUCTOR 4.7UH (3225)
L651	1-412-056-11	s	INDUCTOR 4.7UH (3225)
L800	1-419-630-11	s	COIL, CHOKE 4.7UH
L801	1-419-630-11	s	COIL, CHOKE 4.7UH
L802	1-419-630-11	s	COIL, CHOKE 4.7UH
L803	1-419-630-11	s	COIL, CHOKE 4.7UH
L804	1-412-056-11	s	INDUCTOR 4.7UH (3225)
L806	1-412-056-11	s	INDUCTOR 4.7UH (3225)
L807	1-412-056-11	s	INDUCTOR 4.7UH (3225)
L808	1-412-056-11	s	INDUCTOR 4.7UH (3225)
Q200	8-729-928-81	s	TRANSISTOR DTC144EE
Q800	8-729-928-81	s	TRANSISTOR DTC144EE
Q801	8-729-045-53	s	TRANSISTOR SI4431DY-T1
Q802	8-729-140-63	s	TRANSISTOR 2SA1611-M5M6
R1	1-218-895-11	s	RESISTOR,CHIP 100K 1/10W(1608)
R2	1-218-895-11	s	RESISTOR,CHIP 100K 1/10W(1608)
R3	1-218-863-11	s	RESISTOR,CHIP 4.7K 1/10W(1608)
R4	1-218-863-11	s	RESISTOR,CHIP 4.7K 1/10W(1608)
R5	1-218-863-11	s	RESISTOR,CHIP 4.7K 1/10W(1608)
R100	1-218-895-11	s	RESISTOR,CHIP 100K 1/10W(1608)

(DPR-229HS BOARD [SUFFIX 13])

Ref. No. or Q'ty	Part No.	SP	Description
R101	1-218-895-11	s	RESISTOR,CHIP 100K 1/10W(1608)
R102	1-218-895-11	s	RESISTOR,CHIP 100K 1/10W(1608)
R103	1-218-895-11	s	RESISTOR,CHIP 100K 1/10W(1608)
R105	1-218-895-11	s	RESISTOR,CHIP 100K 1/10W(1608)
R106	1-211-985-11	s	RESISTOR,CHIP 47 1/10W (1608)
R107	1-211-985-11	s	RESISTOR,CHIP 47 1/10W (1608)
R108	1-211-985-11	s	RESISTOR,CHIP 47 1/10W (1608)
R109	1-211-985-11	s	RESISTOR,CHIP 47 1/10W (1608)
R110	1-218-895-11	s	RESISTOR,CHIP 100K 1/10W(1608)
R111	1-218-823-11	s	RESISTOR,CHIP 100 1/10W (1608)
R113	1-218-895-11	s	RESISTOR,CHIP 100K 1/10W(1608)
R114	1-218-895-11	s	RESISTOR,CHIP 100K 1/10W(1608)
R115	1-218-895-11	s	RESISTOR,CHIP 100K 1/10W(1608)
R116	1-218-895-11	s	RESISTOR,CHIP 100K 1/10W(1608)
R117	1-218-863-11	s	RESISTOR,CHIP 4.7K 1/10W(1608)
R118	1-218-863-11	s	RESISTOR,CHIP 4.7K 1/10W(1608)
R122	1-218-863-11	s	RESISTOR,CHIP 4.7K 1/10W(1608)
R126	1-218-863-11	s	RESISTOR,CHIP 4.7K 1/10W(1608)
R130	1-216-864-11	s	CONDUCTOR, CHIP (1608)
R131	1-216-864-11	s	CONDUCTOR, CHIP (1608)
R132	1-216-864-11	s	CONDUCTOR, CHIP (1608)
R133	1-216-864-11	s	CONDUCTOR, CHIP (1608)
R134	1-218-863-11	s	RESISTOR,CHIP 4.7K 1/10W(1608)
R136	1-211-977-11	s	RESISTOR,CHIP 22 1/10W (1608)
R141	1-216-864-11	s	CONDUCTOR, CHIP (1608)
R143	1-218-895-11	s	RESISTOR,CHIP 100K 1/10W(1608)
R144	1-211-977-11	s	RESISTOR,CHIP 22 1/10W (1608)
R200	1-218-831-11	s	RESISTOR, CHIP 220 1/10W(1608)
R202	1-216-864-11	s	CONDUCTOR, CHIP (1608)
R203	1-211-985-11	s	RESISTOR,CHIP 47 1/10W (1608)
R204	1-211-977-11	s	RESISTOR,CHIP 22 1/10W (1608)
R207	1-216-864-11	s	CONDUCTOR, CHIP (1608)
R208	1-218-871-11	s	RESISTOR,CHIP 10K 1/10W (1608)
R209	1-216-864-11	s	CONDUCTOR, CHIP (1608)
R210	1-216-864-11	s	CONDUCTOR, CHIP (1608)
R212	1-216-864-11	s	CONDUCTOR, CHIP (1608)
R213	1-216-864-11	s	CONDUCTOR, CHIP (1608)
R215	1-216-864-11	s	CONDUCTOR, CHIP (1608)
R216	1-216-864-11	s	CONDUCTOR, CHIP (1608)
R217	1-216-864-11	s	CONDUCTOR, CHIP (1608)
R218	1-211-977-11	s	RESISTOR,CHIP 22 1/10W (1608)
R219	1-218-863-11	s	RESISTOR,CHIP 4.7K 1/10W(1608)
R220	1-216-864-11	s	CONDUCTOR, CHIP (1608)
R221	1-216-864-11	s	CONDUCTOR, CHIP (1608)
R222	1-218-863-11	s	RESISTOR,CHIP 4.7K 1/10W(1608)
R300	1-216-864-11	s	CONDUCTOR, CHIP (1608)
R301	1-216-864-11	s	CONDUCTOR, CHIP (1608)
R302	1-216-864-11	s	CONDUCTOR, CHIP (1608)
R303	1-218-863-11	s	RESISTOR,CHIP 4.7K 1/10W(1608)
R304	1-218-863-11	s	RESISTOR,CHIP 4.7K 1/10W(1608)
R305	1-218-863-11	s	RESISTOR,CHIP 4.7K 1/10W(1608)
R306	1-218-895-11	s	RESISTOR,CHIP 100K 1/10W(1608)
R307	1-218-863-11	s	RESISTOR,CHIP 4.7K 1/10W(1608)
R312	1-216-864-11	s	CONDUCTOR, CHIP (1608)
R313	1-216-864-11	s	CONDUCTOR, CHIP (1608)
R314	1-216-864-11	s	CONDUCTOR, CHIP (1608)
R315	1-216-864-11	s	CONDUCTOR, CHIP (1608)
R316	1-216-864-11	s	CONDUCTOR, CHIP (1608)
R317	1-218-895-11	s	RESISTOR,CHIP 100K 1/10W(1608)

(DPR-229HS BOARD [SUFFIX 13])

Ref. No. or Q'ty	Part No.	SP	Description
R318	1-218-895-11	s	RESISTOR,CHIP 100K 1/10W(1608)
R319	1-218-895-11	s	RESISTOR,CHIP 100K 1/10W(1608)
R320	1-218-895-11	s	RESISTOR,CHIP 100K 1/10W(1608)
R321	1-218-895-11	s	RESISTOR,CHIP 100K 1/10W(1608)
R322	1-216-864-11	s	CONDUCTOR, CHIP (1608)
R323	1-216-864-11	s	CONDUCTOR, CHIP (1608)
R324	1-216-864-11	s	CONDUCTOR, CHIP (1608)
R325	1-216-864-11	s	CONDUCTOR, CHIP (1608)
R326	1-216-864-11	s	CONDUCTOR, CHIP (1608)
R327	1-216-864-11	s	CONDUCTOR, CHIP (1608)
R328	1-216-864-11	s	CONDUCTOR, CHIP (1608)
R329	1-216-864-11	s	CONDUCTOR, CHIP (1608)
R330	1-218-895-11	s	RESISTOR,CHIP 100K 1/10W(1608)
R331	1-216-864-11	s	CONDUCTOR, CHIP (1608)
R335	1-216-864-11	s	CONDUCTOR, CHIP (1608)
R338	1-218-863-11	s	RESISTOR,CHIP 4.7K 1/10W(1608)
R349	1-216-864-11	s	CONDUCTOR, CHIP (1608)
R351	1-211-977-11	s	RESISTOR,CHIP 22 1/10W (1608)
R352	1-211-977-11	s	RESISTOR,CHIP 22 1/10W (1608)
R353	1-218-863-11	s	RESISTOR,CHIP 4.7K 1/10W(1608)
R354	1-218-863-11	s	RESISTOR,CHIP 4.7K 1/10W(1608)
R355	1-218-863-11	s	RESISTOR,CHIP 4.7K 1/10W(1608)
R356	1-216-864-11	s	CONDUCTOR, CHIP (1608)
R359	1-211-977-11	s	RESISTOR,CHIP 22 1/10W (1608)
R400	1-218-895-11	s	RESISTOR,CHIP 100K 1/10W(1608)
R402	1-211-985-11	s	RESISTOR,CHIP 47 1/10W (1608)
R403	1-211-985-11	s	RESISTOR,CHIP 47 1/10W (1608)
R428	1-218-823-11	s	RESISTOR,CHIP 100 1/10W (1608)
R429	1-218-823-11	s	RESISTOR,CHIP 100 1/10W (1608)
R430	1-218-823-11	s	RESISTOR,CHIP 100 1/10W (1608)
R431	1-218-823-11	s	RESISTOR,CHIP 100 1/10W (1608)
R432	1-211-977-11	s	RESISTOR,CHIP 22 1/10W (1608)
R433	1-211-977-11	s	RESISTOR,CHIP 22 1/10W (1608)
R434	1-211-977-11	s	RESISTOR,CHIP 22 1/10W (1608)
R435	1-216-864-11	s	CONDUCTOR, CHIP (1608)
R436	1-216-864-11	s	CONDUCTOR, CHIP (1608)
R437	1-211-985-11	s	RESISTOR,CHIP 47 1/10W (1608)
R440	1-218-895-11	s	RESISTOR,CHIP 100K 1/10W(1608)
R441	1-216-864-11	s	CONDUCTOR, CHIP (1608)
R605	1-216-864-11	s	CONDUCTOR, CHIP (1608)
R606	1-216-864-11	s	CONDUCTOR, CHIP (1608)
R619	1-218-895-11	s	RESISTOR,CHIP 100K 1/10W(1608)
R651	1-216-864-11	s	CONDUCTOR, CHIP (1608)
R672	1-218-871-11	s	RESISTOR,CHIP 10K 1/10W (1608)
R673	1-218-856-11	s	RESISTOR,CHIP 2.4K 1/10W(1608)
R674	1-218-871-11	s	RESISTOR,CHIP 10K 1/10W (1608)
R676	1-211-899-11	s	RESISTOR,CHIP 0.221/4W (3225)
R715	1-216-864-11	s	CONDUCTOR, CHIP (1608)
R716	1-216-864-11	s	CONDUCTOR, CHIP (1608)
R717	1-216-864-11	s	CONDUCTOR, CHIP (1608)
R718	1-216-864-11	s	CONDUCTOR, CHIP (1608)
R719	1-216-864-11	s	CONDUCTOR, CHIP (1608)
R720	1-216-864-11	s	CONDUCTOR, CHIP (1608)
R722	1-216-864-11	s	CONDUCTOR, CHIP (1608)
R723	1-216-864-11	s	CONDUCTOR, CHIP (1608)
R724	1-216-864-11	s	CONDUCTOR, CHIP (1608)
R725	1-216-864-11	s	CONDUCTOR, CHIP (1608)
R726	1-216-864-11	s	CONDUCTOR, CHIP (1608)
R727	1-216-864-11	s	CONDUCTOR, CHIP (1608)

(DPR-229HS BOARD [SUFFIX 13])

Ref. No. or Q'ty	Part No.	SP	Description
R728	1-216-864-11	s	CONDUCTOR, CHIP (1608)
R729	1-216-864-11	s	CONDUCTOR, CHIP (1608)
R738	1-218-847-11	s	RESISTOR, CHIP 1K 1/10W (1608)
R739	1-218-847-11	s	RESISTOR, CHIP 1K 1/10W (1608)
R740	1-218-847-11	s	RESISTOR, CHIP 1K 1/10W (1608)
R748	1-216-864-11	s	CONDUCTOR, CHIP (1608)
R749	1-216-864-11	s	CONDUCTOR, CHIP (1608)
R750	1-216-864-11	s	CONDUCTOR, CHIP (1608)
R751	1-216-864-11	s	CONDUCTOR, CHIP (1608)
R752	1-216-864-11	s	CONDUCTOR, CHIP (1608)
R753	1-216-864-11	s	CONDUCTOR, CHIP (1608)
R755	1-216-864-11	s	CONDUCTOR, CHIP (1608)
R756	1-216-864-11	s	CONDUCTOR, CHIP (1608)
R757	1-216-864-11	s	CONDUCTOR, CHIP (1608)
R758	1-216-864-11	s	CONDUCTOR, CHIP (1608)
R759	1-216-864-11	s	CONDUCTOR, CHIP (1608)
R760	1-216-864-11	s	CONDUCTOR, CHIP (1608)
R761	1-216-864-11	s	CONDUCTOR, CHIP (1608)
R762	1-216-864-11	s	CONDUCTOR, CHIP (1608)
R771	1-218-847-11	s	RESISTOR, CHIP 1K 1/10W (1608)
R772	1-218-847-11	s	RESISTOR, CHIP 1K 1/10W (1608)
R773	1-218-847-11	s	RESISTOR, CHIP 1K 1/10W (1608)
R796	1-216-864-11	s	CONDUCTOR, CHIP (1608)
R797	1-216-864-11	s	CONDUCTOR, CHIP (1608)
R811	1-216-864-11	s	CONDUCTOR, CHIP (1608)
R813	1-218-831-11	s	RESISTOR, CHIP 220 1/10W(1608)
R814	1-218-831-11	s	RESISTOR, CHIP 220 1/10W(1608)
R815	1-218-831-11	s	RESISTOR, CHIP 220 1/10W(1608)
R820	1-211-977-11	s	RESISTOR,CHIP 22 1/10W (1608)
R822	1-211-977-11	s	RESISTOR,CHIP 22 1/10W (1608)
R823	1-211-977-11	s	RESISTOR,CHIP 22 1/10W (1608)
R824	1-211-977-11	s	RESISTOR,CHIP 22 1/10W (1608)
R825	1-211-977-11	s	RESISTOR,CHIP 22 1/10W (1608)
R826	1-211-977-11	s	RESISTOR,CHIP 22 1/10W (1608)
R827	1-211-977-11	s	RESISTOR,CHIP 22 1/10W (1608)
R828	1-211-977-11	s	RESISTOR,CHIP 22 1/10W (1608)
R831	1-211-977-11	s	RESISTOR,CHIP 22 1/10W (1608)
R834	1-218-895-11	s	RESISTOR,CHIP 100K 1/10W(1608)
R835	1-218-895-11	s	RESISTOR,CHIP 100K 1/10W(1608)
R839	1-216-864-11	s	CONDUCTOR, CHIP (1608)
R841	1-211-977-11	s	RESISTOR,CHIP 22 1/10W (1608)
R852	1-216-864-11	s	CONDUCTOR, CHIP (1608)
R854	1-211-977-11	s	RESISTOR,CHIP 22 1/10W (1608)
R855	1-211-977-11	s	RESISTOR,CHIP 22 1/10W (1608)
R856	1-211-977-11	s	RESISTOR,CHIP 22 1/10W (1608)
R857	1-211-977-11	s	RESISTOR,CHIP 22 1/10W (1608)
R858	1-211-977-11	s	RESISTOR,CHIP 22 1/10W (1608)
R859	1-211-977-11	s	RESISTOR,CHIP 22 1/10W (1608)
R860	1-211-977-11	s	RESISTOR,CHIP 22 1/10W (1608)
R861	1-211-977-11	s	RESISTOR,CHIP 22 1/10W (1608)
R862	1-211-977-11	s	RESISTOR,CHIP 22 1/10W (1608)
R863	1-218-871-11	s	RESISTOR,CHIP 10K 1/10W (1608)
R864	1-218-847-11	s	RESISTOR, CHIP 1K 1/10W (1608)
R865	1-218-847-11	s	RESISTOR, CHIP 1K 1/10W (1608)
R866	1-218-835-11	s	RESISTOR,CHIP 330 1/10W (1608)
R867	1-218-835-11	s	RESISTOR,CHIP 330 1/10W (1608)
R903	1-218-849-11	s	RESISTOR,CHIP 1.2K 1/10W(1608)
R904	1-218-847-11	s	RESISTOR, CHIP 1K 1/10W (1608)
R905	1-216-864-11	s	CONDUCTOR, CHIP (1608)

(DPR-229HS BOARD [SUFFIX 13])

Ref. No. or Q'ty	Part No.	SP	Description
R906	1-216-864-11	s	CONDUCTOR, CHIP (1608)
R907	1-216-864-11	s	CONDUCTOR, CHIP (1608)
R908	1-216-864-11	s	CONDUCTOR, CHIP (1608)
R909	1-218-895-11	s	RESISTOR,CHIP 100K 1/10W(1608)
R911	1-218-871-11	s	RESISTOR,CHIP 10K 1/10W (1608)
R912	1-218-835-11	s	RESISTOR,CHIP 330 1/10W (1608)
R913	1-216-864-11	s	CONDUCTOR, CHIP (1608)
R914	1-216-864-11	s	CONDUCTOR, CHIP (1608)
R915	1-218-895-11	s	RESISTOR,CHIP 100K 1/10W(1608)
R1037	1-216-864-11	s	CONDUCTOR, CHIP (1608)
R1038	1-216-864-11	s	CONDUCTOR, CHIP (1608)
R1039	1-216-864-11	s	CONDUCTOR, CHIP (1608)
R1040	1-216-864-11	s	CONDUCTOR, CHIP (1608)
R1052	1-218-895-11	s	RESISTOR,CHIP 100K 1/10W(1608)
R1053	1-218-895-11	s	RESISTOR,CHIP 100K 1/10W(1608)
R1054	1-216-864-11	s	CONDUCTOR, CHIP (1608)
RB100	1-233-810-21	s	RES, NETWORK 100K (3216)
RB101	1-233-810-21	s	RES, NETWORK 100K (3216)
RB102	1-239-409-11	s	RESISTOR NETWORK 47 (1608)
RB103	1-239-409-11	s	RESISTOR NETWORK 47 (1608)
RB104	1-233-810-21	s	RES, NETWORK 100K (3216)
RB106	1-234-397-11	s	NETWORK, RES (8 GANG) 100K
RB107	1-234-397-11	s	NETWORK, RES (8 GANG) 100K
RB108	1-233-575-11	s	RES, CHIP NETWORK 22
RB109	1-233-575-11	s	RES, CHIP NETWORK 22
RB110	1-233-575-11	s	RES, CHIP NETWORK 22
RB111	1-233-575-11	s	RES, CHIP NETWORK 22
RB112	1-233-575-11	s	RES, CHIP NETWORK 22
RB113	1-234-397-11	s	NETWORK, RES (8 GANG) 100K
RB114	1-233-576-11	s	RESISTOR,CHIP NETWORK 100
RB115	1-233-576-11	s	RESISTOR,CHIP NETWORK 100
RB116	1-233-810-21	s	RES, NETWORK 100K (3216)
RB117	1-234-397-11	s	NETWORK, RES (8 GANG) 100K
RB118	1-234-397-11	s	NETWORK, RES (8 GANG) 100K
RB119	1-234-397-11	s	NETWORK, RES (8 GANG) 100K
RB120	1-234-397-11	s	NETWORK, RES (8 GANG) 100K
RB121	1-233-576-11	s	RESISTOR,CHIP NETWORK 100
RB122	1-233-576-11	s	RESISTOR,CHIP NETWORK 100
RB123	1-234-397-11	s	NETWORK, RES (8 GANG) 100K
RB200	1-233-411-11	s	RESISTOR,CHIP NETWORK 220/3216
RB201	1-233-411-11	s	RESISTOR,CHIP NETWORK 220/3216
RB202	1-233-411-11	s	RESISTOR,CHIP NETWORK 220/3216
RB203	1-233-411-11	s	RESISTOR,CHIP NETWORK 220/3216
RB204	1-233-411-11	s	RESISTOR,CHIP NETWORK 220/3216
RB205	1-233-575-11	s	RES, CHIP NETWORK 22
RB206	1-233-575-11	s	RES, CHIP NETWORK 22
RB213	1-239-409-11	s	RESISTOR NETWORK 47 (1608)
RB214	1-239-409-11	s	RESISTOR NETWORK 47 (1608)
RB215	1-239-409-11	s	RESISTOR NETWORK 47 (1608)
RB216	1-239-409-11	s	RESISTOR NETWORK 47 (1608)
RB217	1-239-409-11	s	RESISTOR NETWORK 47 (1608)
RB218	1-239-409-11	s	RESISTOR NETWORK 47 (1608)
RB700	1-233-810-21	s	RES, NETWORK 100K (3216)
RB701	1-233-810-21	s	RES, NETWORK 100K (3216)
RB702	1-233-810-21	s	RES, NETWORK 100K (3216)
RB703	1-233-810-21	s	RES, NETWORK 100K (3216)
RB704	1-233-810-21	s	RES, NETWORK 100K (3216)
RB705	1-233-810-21	s	RES, NETWORK 100K (3216)

(DPR-229HS BOARD [SUFFIX 13])

Ref. No. or Q'ty	Part No.	SP	Description
RB706	1-233-810-21	s	RES, NETWORK 100K (3216)
RB707	1-233-810-21	s	RES, NETWORK 100K (3216)
RB708	1-233-810-21	s	RES, NETWORK 100K (3216)
RB709	1-234-397-11	s	NETWORK, RES (8 GANG) 100K
RB710	1-234-397-11	s	NETWORK, RES (8 GANG) 100K
RB801	1-233-810-21	s	RES, NETWORK 100K (3216)
RB804	1-233-411-11	s	RESISTOR,CHIP NETWORK 220/3216
RB805	1-233-411-11	s	RESISTOR,CHIP NETWORK 220/3216
RB806	1-233-411-11	s	RESISTOR,CHIP NETWORK 220/3216
RB807	1-233-414-11	s	RESISTOR,CHIP NETWORK 4.7K
RB808	1-239-409-11	s	RESISTOR NETWORK 47 (1608)
RB809	1-239-409-11	s	RESISTOR NETWORK 47 (1608)
RB810	1-239-409-11	s	RESISTOR NETWORK 47 (1608)
RB811	1-239-409-11	s	RESISTOR NETWORK 47 (1608)
RB812	1-239-409-11	s	RESISTOR NETWORK 47 (1608)
RB813	1-233-810-21	s	RES, NETWORK 100K (3216)
RB814	1-233-810-21	s	RES, NETWORK 100K (3216)
RB815	1-233-810-21	s	RES, NETWORK 100K (3216)
RB816	1-233-810-21	s	RES, NETWORK 100K (3216)
RB817	1-233-414-11	s	RESISTOR,CHIP NETWORK 4.7K
RB818	1-236-908-11	s	RESISTOR,NETWORK 10K (3216)
X200	1-781-809-21	s	OSCILLATOR, CRYSTAL (SMD)

DPR-229HS BOARD [SUFFIX 14-]

[Lot No. 561 -] HDW-S2000/P

Ref. No. or Q'ty	Part No.	SP	Description
1pc	A-1061-234-A	s	MOUNTED CIRCUIT BOARD, DPR-229HS
1pc	3-179-084-11	s	LEVER (R), C BOARD
1pc	3-179-085-11	s	LEVER (L), C BOARD
C100	1-131-992-11	s	CAP, CERAMIC 100000PF F 1608
C101	1-131-992-11	s	CAP, CERAMIC 100000PF F 1608
C102	1-162-927-11	s	CAPACITOR,CERAMIC 100PF/50V CH
C103	1-126-394-11	s	CAPACITOR,ELECT 10MF/16V(CHIP)
C104	1-131-992-11	s	CAP, CERAMIC 100000PF F 1608
C105	1-131-992-11	s	CAP, CERAMIC 100000PF F 1608
C106	1-131-992-11	s	CAP, CERAMIC 100000PF F 1608
C107	1-131-992-11	s	CAP, CERAMIC 100000PF F 1608
C108	1-131-992-11	s	CAP, CERAMIC 100000PF F 1608
C109	1-131-992-11	s	CAP, CERAMIC 100000PF F 1608
C110	1-131-992-11	s	CAP, CERAMIC 100000PF F 1608
C111	1-131-992-11	s	CAP, CERAMIC 100000PF F 1608
C112	1-131-992-11	s	CAP, CERAMIC 100000PF F 1608
C113	1-131-992-11	s	CAP, CERAMIC 100000PF F 1608
C114	1-131-992-11	s	CAP, CERAMIC 100000PF F 1608
C115	1-131-992-11	s	CAP, CERAMIC 100000PF F 1608
C116	1-131-992-11	s	CAP, CERAMIC 100000PF F 1608
C117	1-131-992-11	s	CAP, CERAMIC 100000PF F 1608
C118	1-131-992-11	s	CAP, CERAMIC 100000PF F 1608
C119	1-131-992-11	s	CAP, CERAMIC 100000PF F 1608
C120	1-131-992-11	s	CAP, CERAMIC 100000PF F 1608
C121	1-131-992-11	s	CAP, CERAMIC 100000PF F 1608
C122	1-131-992-11	s	CAP, CERAMIC 100000PF F 1608
C123	1-131-992-11	s	CAP, CERAMIC 100000PF F 1608
C124	1-131-992-11	s	CAP, CERAMIC 100000PF F 1608
C125	1-131-992-11	s	CAP, CERAMIC 100000PF F 1608
C126	1-131-992-11	s	CAP, CERAMIC 100000PF F 1608
C127	1-131-992-11	s	CAP, CERAMIC 100000PF F 1608
C200	1-126-394-11	s	CAPACITOR,ELECT 10MF/16V(CHIP)
C201	1-131-992-11	s	CAP, CERAMIC 100000PF F 1608
C202	1-131-992-11	s	CAP, CERAMIC 100000PF F 1608
C203	1-131-992-11	s	CAP, CERAMIC 100000PF F 1608
C204	1-126-394-11	s	CAPACITOR,ELECT 10MF/16V(CHIP)
C205	1-131-992-11	s	CAP, CERAMIC 100000PF F 1608
C206	1-131-992-11	s	CAP, CERAMIC 100000PF F 1608
C207	1-126-394-11	s	CAPACITOR,ELECT 10MF/16V(CHIP)
C208	1-131-992-11	s	CAP, CERAMIC 100000PF F 1608
C209	1-131-992-11	s	CAP, CERAMIC 100000PF F 1608
C210	1-131-992-11	s	CAP, CERAMIC 100000PF F 1608
C211	1-127-692-91	s	CAP, CHIP CERAMIC 10MF B 3216
C212	1-127-692-91	s	CAP, CHIP CERAMIC 10MF B 3216
C213	1-131-992-11	s	CAP, CERAMIC 100000PF F 1608
C214	1-131-992-11	s	CAP, CERAMIC 100000PF F 1608
C215	1-131-992-11	s	CAP, CERAMIC 100000PF F 1608
C216	1-131-992-11	s	CAP, CERAMIC 100000PF F 1608
C217	1-131-992-11	s	CAP, CERAMIC 100000PF F 1608
C218	1-131-992-11	s	CAP, CERAMIC 100000PF F 1608
C219	1-131-992-11	s	CAP, CERAMIC 100000PF F 1608
C220	1-131-992-11	s	CAP, CERAMIC 100000PF F 1608
C221	1-131-992-11	s	CAP, CERAMIC 100000PF F 1608
C222	1-131-992-11	s	CAP, CERAMIC 100000PF F 1608
C223	1-131-992-11	s	CAP, CERAMIC 100000PF F 1608
C224	1-131-992-11	s	CAP, CERAMIC 100000PF F 1608
C225	1-131-992-11	s	CAP, CERAMIC 100000PF F 1608

(DPR-229HS BOARD [SUFFIX 14-])

Ref. No. or Q'ty	Part No.	SP	Description
C226	1-131-992-11	s	CAP, CERAMIC 100000PF F 1608
C227	1-131-992-11	s	CAP, CERAMIC 100000PF F 1608
C228	1-131-992-11	s	CAP, CERAMIC 100000PF F 1608
C230	1-126-394-11	s	CAPACITOR,ELECT 10MF/16V(CHIP)
C231	1-131-992-11	s	CAP, CERAMIC 100000PF F 1608
C232	1-131-992-11	s	CAP, CERAMIC 100000PF F 1608
C233	1-131-992-11	s	CAP, CERAMIC 100000PF F 1608
C234	1-131-992-11	s	CAP, CERAMIC 100000PF F 1608
C235	1-131-992-11	s	CAP, CERAMIC 100000PF F 1608
C300	1-131-992-11	s	CAP, CERAMIC 100000PF F 1608
C301	1-131-992-11	s	CAP, CERAMIC 100000PF F 1608
C302	1-131-992-11	s	CAP, CERAMIC 100000PF F 1608
C303	1-131-992-11	s	CAP, CERAMIC 100000PF F 1608
C304	1-126-394-11	s	CAPACITOR,ELECT 10MF/16V(CHIP)
C305	1-131-992-11	s	CAP, CERAMIC 100000PF F 1608
C306	1-131-992-11	s	CAP, CERAMIC 100000PF F 1608
C307	1-131-992-11	s	CAP, CERAMIC 100000PF F 1608
C308	1-131-992-11	s	CAP, CERAMIC 100000PF F 1608
C309	1-131-992-11	s	CAP, CERAMIC 100000PF F 1608
C310	1-131-992-11	s	CAP, CERAMIC 100000PF F 1608
C311	1-131-992-11	s	CAP, CERAMIC 100000PF F 1608
C312	1-131-992-11	s	CAP, CERAMIC 100000PF F 1608
C313	1-131-992-11	s	CAP, CERAMIC 100000PF F 1608
C314	1-126-394-11	s	CAPACITOR,ELECT 10MF/16V(CHIP)
C315	1-131-992-11	s	CAP, CERAMIC 100000PF F 1608
C316	1-131-992-11	s	CAP, CERAMIC 100000PF F 1608
C320	1-131-992-11	s	CAP, CERAMIC 100000PF F 1608
C321	1-131-992-11	s	CAP, CERAMIC 100000PF F 1608
C322	1-131-992-11	s	CAP, CERAMIC 100000PF F 1608
C323	1-131-992-11	s	CAP, CERAMIC 100000PF F 1608
C324	1-131-992-11	s	CAP, CERAMIC 100000PF F 1608
C325	1-131-992-11	s	CAP, CERAMIC 100000PF F 1608
C326	1-131-992-11	s	CAP, CERAMIC 100000PF F 1608
C327	1-131-992-11	s	CAP, CERAMIC 100000PF F 1608
C328	1-131-992-11	s	CAP, CERAMIC 100000PF F 1608
C329	1-131-992-11	s	CAP, CERAMIC 100000PF F 1608
C330	1-131-992-11	s	CAP, CERAMIC 100000PF F 1608
C331	1-126-394-11	s	CAPACITOR,ELECT 10MF/16V(CHIP)
C332	1-131-992-11	s	CAP, CERAMIC 100000PF F 1608
C333	1-131-992-11	s	CAP, CERAMIC 100000PF F 1608
C334	1-131-992-11	s	CAP, CERAMIC 100000PF F 1608
C335	1-131-992-11	s	CAP, CERAMIC 100000PF F 1608
C336	1-131-992-11	s	CAP, CERAMIC 100000PF F 1608
C337	1-131-992-11	s	CAP, CERAMIC 100000PF F 1608
C338	1-131-992-11	s	CAP, CERAMIC 100000PF F 1608
C339	1-131-992-11	s	CAP, CERAMIC 100000PF F 1608
C404	1-131-992-11	s	CAP, CERAMIC 100000PF F 1608
C412	1-126-394-11	s	CAPACITOR,ELECT 10MF/16V(CHIP)
C413	1-131-992-11	s	CAP, CERAMIC 100000PF F 1608
C440	1-131-992-11	s	CAP, CERAMIC 100000PF F 1608
C606	1-131-992-11	s	CAP, CERAMIC 100000PF F 1608
C607	1-126-394-11	s	CAPACITOR,ELECT 10MF/16V(CHIP)
C608	1-131-992-11	s	CAP, CERAMIC 100000PF F 1608
C609	1-131-992-11	s	CAP, CERAMIC 100000PF F 1608
C664	1-165-870-21	s	CAPACITOR, ELECT 100MF(6.3X6)
C685	1-162-925-11	s	CAPACITOR,CERAMIC 68PF/50V CH
C686	1-165-872-21	s	CAPACITOR,SOLID ELECT 47MF
C700	1-131-992-11	s	CAP, CERAMIC 100000PF F 1608
C701	1-113-503-11	s	CAPACITOR,CERAMIC 3900PF CH

(DPR-229HS BOARD [SUFFIX 14-])

Ref. No. or Q'ty	Part No.	SP	Description
C702	1-162-968-11	s	CAPACITOR,CERAMIC 4700PF/50V B
C703	1-131-992-11	s	CAP, CERAMIC 100000PF F 1608
C704	1-131-992-11	s	CAP, CERAMIC 100000PF F 1608
C705	1-131-992-11	s	CAP, CERAMIC 100000PF F 1608
C706	1-131-992-11	s	CAP, CERAMIC 100000PF F 1608
C707	1-131-992-11	s	CAP, CERAMIC 100000PF F 1608
C708	1-131-992-11	s	CAP, CERAMIC 100000PF F 1608
C709	1-131-992-11	s	CAP, CERAMIC 100000PF F 1608
C710	1-131-992-11	s	CAP, CERAMIC 100000PF F 1608
C711	1-131-992-11	s	CAP, CERAMIC 100000PF F 1608
C712	1-131-992-11	s	CAP, CERAMIC 100000PF F 1608
C713	1-113-503-11	s	CAPACITOR,CERAMIC 3900PF CH
C714	1-162-968-11	s	CAPACITOR,CERAMIC 4700PF/50V B
C715	1-131-992-11	s	CAP, CERAMIC 100000PF F 1608
C716	1-131-992-11	s	CAP, CERAMIC 100000PF F 1608
C717	1-131-992-11	s	CAP, CERAMIC 100000PF F 1608
C718	1-131-992-11	s	CAP, CERAMIC 100000PF F 1608
C719	1-131-992-11	s	CAP, CERAMIC 100000PF F 1608
C720	1-131-992-11	s	CAP, CERAMIC 100000PF F 1608
C721	1-131-992-11	s	CAP, CERAMIC 100000PF F 1608
C722	1-131-992-11	s	CAP, CERAMIC 100000PF F 1608
C723	1-131-992-11	s	CAP, CERAMIC 100000PF F 1608
C724	1-131-992-11	s	CAP, CERAMIC 100000PF F 1608
C810	1-131-992-11	s	CAP, CERAMIC 100000PF F 1608
C811	1-131-992-11	s	CAP, CERAMIC 100000PF F 1608
C812	1-128-590-11	s	CAPACITOR ELECT 100MF/6.3V(105
C813	1-128-590-11	s	CAPACITOR ELECT 100MF/6.3V(105
C814	1-131-992-11	s	CAP, CERAMIC 100000PF F 1608
C815	1-131-992-11	s	CAP, CERAMIC 100000PF F 1608
C816	1-131-992-11	s	CAP, CERAMIC 100000PF F 1608
C817	1-131-992-11	s	CAP, CERAMIC 100000PF F 1608
C818	1-131-992-11	s	CAP, CERAMIC 100000PF F 1608
C819	1-128-590-11	s	CAPACITOR ELECT 100MF/6.3V(105
C820	1-128-590-11	s	CAPACITOR ELECT 100MF/6.3V(105
C821	1-128-590-11	s	CAPACITOR ELECT 100MF/6.3V(105
C822	1-128-590-11	s	CAPACITOR ELECT 100MF/6.3V(105
C823	1-131-992-11	s	CAP, CERAMIC 100000PF F 1608
C827	1-131-992-11	s	CAP, CERAMIC 100000PF F 1608
C829	1-131-992-11	s	CAP, CERAMIC 100000PF F 1608
C831	1-131-992-11	s	CAP, CERAMIC 100000PF F 1608
C832	1-131-992-11	s	CAP, CERAMIC 100000PF F 1608
C833	1-131-992-11	s	CAP, CERAMIC 100000PF F 1608
C834	1-131-992-11	s	CAP, CERAMIC 100000PF F 1608
C835	1-131-992-11	s	CAP, CERAMIC 100000PF F 1608
C837	1-131-992-11	s	CAP, CERAMIC 100000PF F 1608
C838	1-131-992-11	s	CAP, CERAMIC 100000PF F 1608
C839	1-126-394-11	s	CAPACITOR,ELECT 10MF/16V(CHIP)
C842	1-131-992-11	s	CAP, CERAMIC 100000PF F 1608
C843	1-131-992-11	s	CAP, CERAMIC 100000PF F 1608
C844	1-131-992-11	s	CAP, CERAMIC 100000PF F 1608
C845	1-131-992-11	s	CAP, CERAMIC 100000PF F 1608
C846	1-131-992-11	s	CAP, CERAMIC 100000PF F 1608
C847	1-131-992-11	s	CAP, CERAMIC 100000PF F 1608
C848	1-126-394-11	s	CAPACITOR,ELECT 10MF/16V(CHIP)
C849	1-126-394-11	s	CAPACITOR,ELECT 10MF/16V(CHIP)
C850	1-131-992-11	s	CAP, CERAMIC 100000PF F 1608
C851	1-131-992-11	s	CAP, CERAMIC 100000PF F 1608
C852	1-131-992-11	s	CAP, CERAMIC 100000PF F 1608
C853	1-126-394-11	s	CAPACITOR,ELECT 10MF/16V(CHIP)

(DPR-229HS BOARD [SUFFIX 14-])

Ref. No. or Q'ty	Part No.	SP	Description
C862	1-131-992-11	s	CAP, CERAMIC 100000PF F 1608
C863	1-131-992-11	s	CAP, CERAMIC 100000PF F 1608
C864	1-131-992-11	s	CAP, CERAMIC 100000PF F 1608
C865	1-131-992-11	s	CAP, CERAMIC 100000PF F 1608
C867	1-127-861-11	s	CAP, CERAMIC 2.2MF B (3216)
C868	1-127-861-11	s	CAP, CERAMIC 2.2MF B (3216)
C869	1-131-992-11	s	CAP, CERAMIC 100000PF F 1608
C912	1-131-992-11	s	CAP, CERAMIC 100000PF F 1608
C913	1-126-394-11	s	CAPACITOR,ELECT 10MF/16V(CHIP)
C914	1-126-394-11	s	CAPACITOR,ELECT 10MF/16V(CHIP)
C915	1-131-992-11	s	CAP, CERAMIC 100000PF F 1608
C916	1-131-992-11	s	CAP, CERAMIC 100000PF F 1608
C917	1-131-992-11	s	CAP, CERAMIC 100000PF F 1608
C918	1-131-992-11	s	CAP, CERAMIC 100000PF F 1608
C919	1-131-992-11	s	CAP, CERAMIC 100000PF F 1608
C920	1-131-992-11	s	CAP, CERAMIC 100000PF F 1608
C921	1-131-992-11	s	CAP, CERAMIC 100000PF F 1608
C922	1-131-992-11	s	CAP, CERAMIC 100000PF F 1608
C923	1-131-992-11	s	CAP, CERAMIC 100000PF F 1608
C924	1-131-992-11	s	CAP, CERAMIC 100000PF F 1608
C925	1-131-992-11	s	CAP, CERAMIC 100000PF F 1608
C926	1-131-992-11	s	CAP, CERAMIC 100000PF F 1608
C927	1-131-992-11	s	CAP, CERAMIC 100000PF F 1608
C928	1-131-992-11	s	CAP, CERAMIC 100000PF F 1608
C929	1-131-992-11	s	CAP, CERAMIC 100000PF F 1608
C930	1-131-992-11	s	CAP, CERAMIC 100000PF F 1608
C931	1-131-992-11	s	CAP, CERAMIC 100000PF F 1608
C932	1-131-992-11	s	CAP, CERAMIC 100000PF F 1608
C933	1-131-992-11	s	CAP, CERAMIC 100000PF F 1608
C934	1-131-992-11	s	CAP, CERAMIC 100000PF F 1608
C935	1-131-992-11	s	CAP, CERAMIC 100000PF F 1608
C936	1-131-992-11	s	CAP, CERAMIC 100000PF F 1608
C937	1-131-992-11	s	CAP, CERAMIC 100000PF F 1608
C938	1-131-992-11	s	CAP, CERAMIC 100000PF F 1608
C939	1-131-992-11	s	CAP, CERAMIC 100000PF F 1608
CN16	1-580-789-91	s	PIN, CONNECTOR 6P
E100	1-535-877-22	s	CHIP,CHECKER (TEST POINT)
E200	1-535-877-22	s	CHIP,CHECKER (TEST POINT)
E300	1-535-877-22	s	CHIP,CHECKER (TEST POINT)
E400	1-535-877-22	s	CHIP,CHECKER (TEST POINT)
E401	1-535-877-22	s	CHIP,CHECKER (TEST POINT)
E600	1-535-877-22	s	CHIP,CHECKER (TEST POINT)
E700	1-535-877-22	s	CHIP,CHECKER (TEST POINT)
E800	1-535-877-22	s	CHIP,CHECKER (TEST POINT)
F800	⚠ 1-576-270-11	s	FUSE CHIP 4A/125V (6125)
F802	⚠ 1-576-270-11	s	FUSE CHIP 4A/125V (6125)
F803	⚠ 1-576-270-11	s	FUSE CHIP 4A/125V (6125)
FB200	1-469-094-21	s	FERRITE, EMI (SMD)
FL200	1-239-898-22	s	FILTER, EMI (SMD)
FL600	1-233-674-21	s	FILTER, EMI
FL601	1-233-674-21	s	FILTER, EMI
IC100	8-759-549-15	s	IC SN74LV245APWR
IC101	8-759-549-15	s	IC SN74LV245APWR
IC102	8-759-523-84	s	IC TC74VHC14FT (EL)
IC103	8-759-491-46	s	IC TC74VHCT04AFT (EL)
IC104	8-759-491-46	s	IC TC74VHCT04AFT (EL)

(DPR-229HS BOARD [SUFFIX 14-])

Ref. No. or Q'ty	Part No.	SP	Description
IC105	8-759-523-94	s	IC TC74VHC32FT(EL)
IC106	8-759-549-01	s	IC SN74LV125APWR
IC107	8-759-392-77	s	IC SN74LVC245APW (E20)
IC108	8-759-549-15	s	IC SN74LV245APWR
IC109	8-759-524-07	s	IC TC74VHC138FT(EL)
IC110	8-759-549-15	s	IC SN74LV245APWR
IC111	8-759-491-46	s	IC TC74VHCT04AFT (EL)
IC112	8-759-549-15	s	IC SN74LV245APWR
IC113	8-759-549-15	s	IC SN74LV245APWR
IC114	8-759-549-15	s	IC SN74LV245APWR
IC115	8-759-549-15	s	IC SN74LV245APWR
IC116	8-759-549-15	s	IC SN74LV245APWR
IC117	8-759-549-15	s	IC SN74LV245APWR
IC118	8-759-524-07	s	IC TC74VHC138FT(EL)
IC119	8-759-524-07	s	IC TC74VHC138FT(EL)
IC120	8-759-523-81	s	IC TC74VHC08FT(EL)
IC121	6-706-487-01	s	IC TC7SH08FU(T5RSOYJF)
IC122	8-759-523-92	s	IC TC74VHC21FT(EL)
IC123	8-759-549-15	s	IC SN74LV245APWR
IC124	8-752-392-03	s	IC CXD1095BR
IC125	6-706-487-01	s	IC TC7SH08FU(T5RSOYJF)
IC126	6-706-482-01	s	IC TC7SH00FU(T5RSOYJF)
IC200	8-759-475-55	s	IC TC74LCX574FT(EL)
IC201	8-759-475-55	s	IC TC74LCX574FT(EL)
IC202	8-759-475-55	s	IC TC74LCX574FT(EL)
IC203	8-759-669-41	s	IC SN74LVC125APWR-12
IC204	6-706-484-01	s	IC TC7SH04FU(T5RSOYJF)
IC205	8-759-669-41	s	IC SN74LVC125APWR-12
IC208	8-759-392-77	s	IC SN74LVC245APW (E20)
IC209	8-759-392-77	s	IC SN74LVC245APW (E20)
IC210	8-759-392-77	s	IC SN74LVC245APW (E20)
IC211	6-705-983-01	s	IC IS42S32200B-6TL-TR
IC212	8-759-712-32	s	IC SN65LVDS389DBTR
IC213	8-759-712-32	s	IC SN65LVDS389DBTR
IC214	8-759-712-32	s	IC SN65LVDS389DBTR
IC217	6-706-484-01	s	IC TC7SH04FU(T5RSOYJF)
IC301	8-759-449-09	s	IC CXD8945BR
IC302	8-759-524-10	s	IC TC74VHC157FT (EL)
IC303	8-759-524-10	s	IC TC74VHC157FT (EL)
IC307	6-700-497-01	s	IC MSM56V16800F-10TS-K
IC308	6-700-497-01	s	IC MSM56V16800F-10TS-K
IC309	6-700-497-01	s	IC MSM56V16800F-10TS-K
IC310	8-759-392-77	s	IC SN74LVC245APW (E20)
IC311	8-759-392-77	s	IC SN74LVC245APW (E20)
IC312	6-705-983-01	s	IC IS42S32200B-6TL-TR
IC401	8-759-669-41	s	IC SN74LVC125APWR-12
IC413	8-759-639-86	s	IC SN65LVDS32DR
IC601	8-759-524-09	s	IC TC74VHC153FT (EL)
IC602	8-759-475-55	s	IC TC74LCX574FT(EL)
IC603	8-759-475-55	s	IC TC74LCX574FT(EL)
IC655	8-759-664-03	s	IC LP3964EMPX-ADJ
IC700	8-752-392-03	s	IC CXD1095BR
IC701	6-702-254-01	s	IC DSPB56362PV100-1J21D
IC702	8-759-543-83	s	IC KM416V1204CT-L6
IC703	8-759-543-83	s	IC KM416V1204CT-L6
IC704	6-702-254-01	s	IC DSPB56362PV100-1J21D
IC705	8-759-543-83	s	IC KM416V1204CT-L6
IC706	8-759-543-83	s	IC KM416V1204CT-L6
IC801	8-759-549-15	s	IC SN74LV245APWR

(DPR-229HS BOARD [SUFFIX 14-])

Ref. No. or Q'ty	Part No.	SP	Description
IC802	6-706-487-01	s	IC TC7SH08FU(T5RSOYJF)
IC803	8-759-491-46	s	IC TC74VHCT04AFT (EL)
IC804	8-759-669-41	s	IC SN74LVC125APWR-12
IC805	8-759-475-43	s	IC TC74LCX125FT(EL)
IC808	8-759-549-15	s	IC SN74LV245APWR
IC809	8-759-523-78	s	IC TC74VHC00FT(EL)
IC810	8-759-392-77	s	IC SN74LVC245APW (E20)
IC812	8-759-669-41	s	IC SN74LVC125APWR-12
IC813	8-759-669-41	s	IC SN74LVC125APWR-12
IC814	8-759-669-41	s	IC SN74LVC125APWR-12
IC815	8-759-475-43	s	IC TC74LCX125FT(EL)
IC817	8-759-549-01	s	IC SN74LV125APWR
IC818	8-759-549-15	s	IC SN74LV245APWR
IC819	8-759-524-10	s	IC TC74VHC157FT (EL)
IC822	8-759-549-01	s	IC SN74LV125APWR
IC823	8-759-549-15	s	IC SN74LV245APWR
IC824	8-759-549-15	s	IC SN74LV245APWR
IC825	8-759-549-15	s	IC SN74LV245APWR
IC826	8-759-549-01	s	IC SN74LV125APWR
IC829	8-759-524-10	s	IC TC74VHC157FT (EL)
IC831	8-759-524-27	s	IC TC74VHC244FT(EL)
IC832	6-706-484-01	s	IC TC7SH04FU(T5RSOYJF)
IC833	6-803-242-02	s	IC XC18V02-DPR229IMX-V4.00
IC834	6-803-243-03	s	IC XC18V02-DPR229SX-V3.01
IC902	6-802-024-01	s	IC CXD9012BR
IC903	8-759-549-15	s	IC SN74LV245APWR
IC904	8-759-549-15	s	IC SN74LV245APWR
IC905	6-705-983-01	s	IC IS42S32200B-6TL-TR
L100	1-412-056-11	s	INDUCTOR 4.7UH (3225)
L101	1-412-056-11	s	INDUCTOR 4.7UH (3225)
L102	1-412-056-11	s	INDUCTOR 4.7UH (3225)
L103	1-412-056-11	s	INDUCTOR 4.7UH (3225)
L200	1-412-056-11	s	INDUCTOR 4.7UH (3225)
L201	1-412-056-11	s	INDUCTOR 4.7UH (3225)
L202	1-412-056-11	s	INDUCTOR 4.7UH (3225)
L402	1-412-056-11	s	INDUCTOR 4.7UH (3225)
L600	1-412-056-11	s	INDUCTOR 4.7UH (3225)
L651	1-412-056-11	s	INDUCTOR 4.7UH (3225)
L800	1-419-630-11	s	COIL, CHOKE 4.7UH
L801	1-419-630-11	s	COIL, CHOKE 4.7UH
L802	1-419-630-11	s	COIL, CHOKE 4.7UH
L803	1-419-630-11	s	COIL, CHOKE 4.7UH
L804	1-412-056-11	s	INDUCTOR 4.7UH (3225)
L806	1-412-056-11	s	INDUCTOR 4.7UH (3225)
L807	1-412-056-11	s	INDUCTOR 4.7UH (3225)
L808	1-412-056-11	s	INDUCTOR 4.7UH (3225)
Q200	8-729-928-81	s	TRANSISTOR DTC144EE
Q800	8-729-928-81	s	TRANSISTOR DTC144EE
Q801	8-729-045-53	s	TRANSISTOR SI4431DY-T1
Q802	8-729-140-63	s	TRANSISTOR 2SA1611-M5M6
R1	1-218-895-11	s	RESISTOR,CHIP 100K 1/10W(1608)
R2	1-218-895-11	s	RESISTOR,CHIP 100K 1/10W(1608)
R3	1-218-863-11	s	RESISTOR,CHIP 4.7K 1/10W(1608)
R4	1-218-863-11	s	RESISTOR,CHIP 4.7K 1/10W(1608)
R5	1-218-863-11	s	RESISTOR,CHIP 4.7K 1/10W(1608)
R100	1-218-895-11	s	RESISTOR,CHIP 100K 1/10W(1608)
R101	1-218-895-11	s	RESISTOR,CHIP 100K 1/10W(1608)
R102	1-218-895-11	s	RESISTOR,CHIP 100K 1/10W(1608)

(DPR-229HS BOARD [SUFFIX 14-])

Ref. No. or Q'ty	Part No.	SP	Description
R103	1-218-895-11	s	RESISTOR,CHIP 100K 1/10W(1608)
R105	1-218-895-11	s	RESISTOR,CHIP 100K 1/10W(1608)
R106	1-211-985-11	s	RESISTOR,CHIP 47 1/10W (1608)
R107	1-211-985-11	s	RESISTOR,CHIP 47 1/10W (1608)
R108	1-211-985-11	s	RESISTOR,CHIP 47 1/10W (1608)
R109	1-211-985-11	s	RESISTOR,CHIP 47 1/10W (1608)
R110	1-218-895-11	s	RESISTOR,CHIP 100K 1/10W(1608)
R111	1-218-823-11	s	RESISTOR,CHIP 100 1/10W (1608)
R113	1-218-895-11	s	RESISTOR,CHIP 100K 1/10W(1608)
R114	1-218-895-11	s	RESISTOR,CHIP 100K 1/10W(1608)
R115	1-218-895-11	s	RESISTOR,CHIP 100K 1/10W(1608)
R116	1-218-895-11	s	RESISTOR,CHIP 100K 1/10W(1608)
R117	1-218-863-11	s	RESISTOR,CHIP 4.7K 1/10W(1608)
R118	1-218-863-11	s	RESISTOR,CHIP 4.7K 1/10W(1608)
R122	1-218-863-11	s	RESISTOR,CHIP 4.7K 1/10W(1608)
R126	1-218-863-11	s	RESISTOR,CHIP 4.7K 1/10W(1608)
R130	1-216-864-11	s	CONDUCTOR, CHIP (1608)
R131	1-216-864-11	s	CONDUCTOR, CHIP (1608)
R132	1-216-864-11	s	CONDUCTOR, CHIP (1608)
R133	1-216-864-11	s	CONDUCTOR, CHIP (1608)
R134	1-218-863-11	s	RESISTOR,CHIP 4.7K 1/10W(1608)
R136	1-211-977-11	s	RESISTOR,CHIP 22 1/10W (1608)
R141	1-216-864-11	s	CONDUCTOR, CHIP (1608)
R143	1-218-895-11	s	RESISTOR,CHIP 100K 1/10W(1608)
R144	1-211-977-11	s	RESISTOR,CHIP 22 1/10W (1608)
R200	1-218-831-11	s	RESISTOR, CHIP 220 1/10W(1608)
R202	1-216-864-11	s	CONDUCTOR, CHIP (1608)
R203	1-211-985-11	s	RESISTOR,CHIP 47 1/10W (1608)
R204	1-211-977-11	s	RESISTOR,CHIP 22 1/10W (1608)
R207	1-216-864-11	s	CONDUCTOR, CHIP (1608)
R208	1-218-871-11	s	RESISTOR,CHIP 10K 1/10W (1608)
R209	1-216-864-11	s	CONDUCTOR, CHIP (1608)
R210	1-216-864-11	s	CONDUCTOR, CHIP (1608)
R212	1-216-864-11	s	CONDUCTOR, CHIP (1608)
R213	1-216-864-11	s	CONDUCTOR, CHIP (1608)
R215	1-216-864-11	s	CONDUCTOR, CHIP (1608)
R216	1-216-864-11	s	CONDUCTOR, CHIP (1608)
R217	1-216-864-11	s	CONDUCTOR, CHIP (1608)
R218	1-211-977-11	s	RESISTOR,CHIP 22 1/10W (1608)
R219	1-218-863-11	s	RESISTOR,CHIP 4.7K 1/10W(1608)
R220	1-216-864-11	s	CONDUCTOR, CHIP (1608)
R221	1-216-864-11	s	CONDUCTOR, CHIP (1608)
R222	1-218-863-11	s	RESISTOR,CHIP 4.7K 1/10W(1608)
R300	1-216-864-11	s	CONDUCTOR, CHIP (1608)
R301	1-216-864-11	s	CONDUCTOR, CHIP (1608)
R302	1-216-864-11	s	CONDUCTOR, CHIP (1608)
R303	1-218-863-11	s	RESISTOR,CHIP 4.7K 1/10W(1608)
R304	1-218-863-11	s	RESISTOR,CHIP 4.7K 1/10W(1608)
R305	1-218-863-11	s	RESISTOR,CHIP 4.7K 1/10W(1608)
R306	1-218-895-11	s	RESISTOR,CHIP 100K 1/10W(1608)
R307	1-218-863-11	s	RESISTOR,CHIP 4.7K 1/10W(1608)
R312	1-216-864-11	s	CONDUCTOR, CHIP (1608)
R313	1-216-864-11	s	CONDUCTOR, CHIP (1608)
R314	1-216-864-11	s	CONDUCTOR, CHIP (1608)
R315	1-216-864-11	s	CONDUCTOR, CHIP (1608)
R316	1-216-864-11	s	CONDUCTOR, CHIP (1608)
R317	1-218-895-11	s	RESISTOR,CHIP 100K 1/10W(1608)
R318	1-218-895-11	s	RESISTOR,CHIP 100K 1/10W(1608)
R319	1-218-895-11	s	RESISTOR,CHIP 100K 1/10W(1608)

(DPR-229HS BOARD [SUFFIX 14-])

Ref. No. or Q'ty	Part No.	SP	Description
R320	1-218-895-11	s	RESISTOR,CHIP 100K 1/10W(1608)
R321	1-218-895-11	s	RESISTOR,CHIP 100K 1/10W(1608)
R322	1-216-864-11	s	CONDUCTOR, CHIP (1608)
R323	1-216-864-11	s	CONDUCTOR, CHIP (1608)
R324	1-216-864-11	s	CONDUCTOR, CHIP (1608)
R325	1-216-864-11	s	CONDUCTOR, CHIP (1608)
R326	1-216-864-11	s	CONDUCTOR, CHIP (1608)
R327	1-216-864-11	s	CONDUCTOR, CHIP (1608)
R328	1-216-864-11	s	CONDUCTOR, CHIP (1608)
R329	1-216-864-11	s	CONDUCTOR, CHIP (1608)
R330	1-218-895-11	s	RESISTOR,CHIP 100K 1/10W(1608)
R331	1-216-864-11	s	CONDUCTOR, CHIP (1608)
R335	1-216-864-11	s	CONDUCTOR, CHIP (1608)
R338	1-218-863-11	s	RESISTOR,CHIP 4.7K 1/10W(1608)
R349	1-216-864-11	s	CONDUCTOR, CHIP (1608)
R351	1-211-977-11	s	RESISTOR,CHIP 22 1/10W (1608)
R352	1-211-977-11	s	RESISTOR,CHIP 22 1/10W (1608)
R353	1-218-863-11	s	RESISTOR,CHIP 4.7K 1/10W(1608)
R354	1-218-863-11	s	RESISTOR,CHIP 4.7K 1/10W(1608)
R355	1-218-863-11	s	RESISTOR,CHIP 4.7K 1/10W(1608)
R356	1-216-864-11	s	CONDUCTOR, CHIP (1608)
R359	1-211-977-11	s	RESISTOR,CHIP 22 1/10W (1608)
R400	1-218-895-11	s	RESISTOR,CHIP 100K 1/10W(1608)
R402	1-211-985-11	s	RESISTOR,CHIP 47 1/10W (1608)
R403	1-211-985-11	s	RESISTOR,CHIP 47 1/10W (1608)
R428	1-218-823-11	s	RESISTOR,CHIP 100 1/10W (1608)
R429	1-218-823-11	s	RESISTOR,CHIP 100 1/10W (1608)
R430	1-218-823-11	s	RESISTOR,CHIP 100 1/10W (1608)
R431	1-218-823-11	s	RESISTOR,CHIP 100 1/10W (1608)
R432	1-211-977-11	s	RESISTOR,CHIP 22 1/10W (1608)
R433	1-211-977-11	s	RESISTOR,CHIP 22 1/10W (1608)
R434	1-211-977-11	s	RESISTOR,CHIP 22 1/10W (1608)
R435	1-216-864-11	s	CONDUCTOR, CHIP (1608)
R436	1-216-864-11	s	CONDUCTOR, CHIP (1608)
R437	1-211-985-11	s	RESISTOR,CHIP 47 1/10W (1608)
R440	1-218-895-11	s	RESISTOR,CHIP 100K 1/10W(1608)
R441	1-216-864-11	s	CONDUCTOR, CHIP (1608)
R605	1-216-864-11	s	CONDUCTOR, CHIP (1608)
R606	1-216-864-11	s	CONDUCTOR, CHIP (1608)
R619	1-218-895-11	s	RESISTOR,CHIP 100K 1/10W(1608)
R651	1-216-864-11	s	CONDUCTOR, CHIP (1608)
R672	1-218-871-11	s	RESISTOR,CHIP 10K 1/10W (1608)
R673	1-218-856-11	s	RESISTOR,CHIP 2.4K 1/10W(1608)
R674	1-218-871-11	s	RESISTOR,CHIP 10K 1/10W (1608)
R676	1-211-899-11	s	RESISTOR,CHIP 0.22 1/4W (3225)
R715	1-216-864-11	s	CONDUCTOR, CHIP (1608)
R716	1-216-864-11	s	CONDUCTOR, CHIP (1608)
R717	1-216-864-11	s	CONDUCTOR, CHIP (1608)
R718	1-216-864-11	s	CONDUCTOR, CHIP (1608)
R719	1-216-864-11	s	CONDUCTOR, CHIP (1608)
R720	1-216-864-11	s	CONDUCTOR, CHIP (1608)
R722	1-216-864-11	s	CONDUCTOR, CHIP (1608)
R723	1-216-864-11	s	CONDUCTOR, CHIP (1608)
R724	1-216-864-11	s	CONDUCTOR, CHIP (1608)
R725	1-216-864-11	s	CONDUCTOR, CHIP (1608)
R726	1-216-864-11	s	CONDUCTOR, CHIP (1608)
R727	1-216-864-11	s	CONDUCTOR, CHIP (1608)
R728	1-216-864-11	s	CONDUCTOR, CHIP (1608)
R729	1-216-864-11	s	CONDUCTOR, CHIP (1608)

(DPR-229HS BOARD [SUFFIX 14-])

Ref. No. or Q'ty	Part No.	SP	Description
R738	1-218-847-11	s	RESISTOR, CHIP 1K 1/10W (1608)
R739	1-218-847-11	s	RESISTOR, CHIP 1K 1/10W (1608)
R740	1-218-847-11	s	RESISTOR, CHIP 1K 1/10W (1608)
R748	1-216-864-11	s	CONDUCTOR, CHIP (1608)
R749	1-216-864-11	s	CONDUCTOR, CHIP (1608)
R750	1-216-864-11	s	CONDUCTOR, CHIP (1608)
R751	1-216-864-11	s	CONDUCTOR, CHIP (1608)
R752	1-216-864-11	s	CONDUCTOR, CHIP (1608)
R753	1-216-864-11	s	CONDUCTOR, CHIP (1608)
R755	1-216-864-11	s	CONDUCTOR, CHIP (1608)
R756	1-216-864-11	s	CONDUCTOR, CHIP (1608)
R757	1-216-864-11	s	CONDUCTOR, CHIP (1608)
R758	1-216-864-11	s	CONDUCTOR, CHIP (1608)
R759	1-216-864-11	s	CONDUCTOR, CHIP (1608)
R760	1-216-864-11	s	CONDUCTOR, CHIP (1608)
R761	1-216-864-11	s	CONDUCTOR, CHIP (1608)
R762	1-216-864-11	s	CONDUCTOR, CHIP (1608)
R771	1-218-847-11	s	RESISTOR, CHIP 1K 1/10W (1608)
R772	1-218-847-11	s	RESISTOR, CHIP 1K 1/10W (1608)
R773	1-218-847-11	s	RESISTOR, CHIP 1K 1/10W (1608)
R796	1-216-864-11	s	CONDUCTOR, CHIP (1608)
R797	1-216-864-11	s	CONDUCTOR, CHIP (1608)
R811	1-216-864-11	s	CONDUCTOR, CHIP (1608)
R813	1-218-831-11	s	RESISTOR, CHIP 220 1/10W(1608)
R814	1-218-831-11	s	RESISTOR, CHIP 220 1/10W(1608)
R815	1-218-831-11	s	RESISTOR, CHIP 220 1/10W(1608)
R820	1-211-977-11	s	RESISTOR,CHIP 22 1/10W (1608)
R822	1-211-977-11	s	RESISTOR,CHIP 22 1/10W (1608)
R823	1-211-977-11	s	RESISTOR,CHIP 22 1/10W (1608)
R824	1-211-977-11	s	RESISTOR,CHIP 22 1/10W (1608)
R825	1-211-977-11	s	RESISTOR,CHIP 22 1/10W (1608)
R826	1-211-977-11	s	RESISTOR,CHIP 22 1/10W (1608)
R827	1-211-977-11	s	RESISTOR,CHIP 22 1/10W (1608)
R828	1-211-977-11	s	RESISTOR,CHIP 22 1/10W (1608)
R831	1-211-977-11	s	RESISTOR,CHIP 22 1/10W (1608)
R834	1-218-895-11	s	RESISTOR,CHIP 100K 1/10W(1608)
R835	1-218-895-11	s	RESISTOR,CHIP 100K 1/10W(1608)
R839	1-216-864-11	s	CONDUCTOR, CHIP (1608)
R841	1-211-977-11	s	RESISTOR,CHIP 22 1/10W (1608)
R852	1-216-864-11	s	CONDUCTOR, CHIP (1608)
R854	1-211-977-11	s	RESISTOR,CHIP 22 1/10W (1608)
R855	1-211-977-11	s	RESISTOR,CHIP 22 1/10W (1608)
R856	1-211-977-11	s	RESISTOR,CHIP 22 1/10W (1608)
R857	1-211-977-11	s	RESISTOR,CHIP 22 1/10W (1608)
R858	1-211-977-11	s	RESISTOR,CHIP 22 1/10W (1608)
R859	1-211-977-11	s	RESISTOR,CHIP 22 1/10W (1608)
R860	1-211-977-11	s	RESISTOR,CHIP 22 1/10W (1608)
R861	1-211-977-11	s	RESISTOR,CHIP 22 1/10W (1608)
R862	1-211-977-11	s	RESISTOR,CHIP 22 1/10W (1608)
R863	1-218-871-11	s	RESISTOR,CHIP 10K 1/10W (1608)
R864	1-218-847-11	s	RESISTOR, CHIP 1K 1/10W (1608)
R865	1-218-847-11	s	RESISTOR, CHIP 1K 1/10W (1608)
R866	1-218-835-11	s	RESISTOR,CHIP 330 1/10W (1608)
R867	1-218-835-11	s	RESISTOR,CHIP 330 1/10W (1608)
R903	1-218-849-11	s	RESISTOR,CHIP 1.2K 1/10W(1608)
R904	1-218-847-11	s	RESISTOR, CHIP 1K 1/10W (1608)
R905	1-216-864-11	s	CONDUCTOR, CHIP (1608)
R906	1-216-864-11	s	CONDUCTOR, CHIP (1608)
R907	1-216-864-11	s	CONDUCTOR, CHIP (1608)

(DPR-229HS BOARD [SUFFIX 14-])

Ref. No. or Q'ty	Part No.	SP	Description
R908	1-216-864-11	s	CONDUCTOR, CHIP (1608)
R909	1-218-895-11	s	RESISTOR,CHIP 100K 1/10W(1608)
R911	1-218-871-11	s	RESISTOR,CHIP 10K 1/10W (1608)
R912	1-218-835-11	s	RESISTOR,CHIP 330 1/10W (1608)
R913	1-216-864-11	s	CONDUCTOR, CHIP (1608)
R914	1-216-864-11	s	CONDUCTOR, CHIP (1608)
R915	1-218-895-11	s	RESISTOR,CHIP 100K 1/10W(1608)
R1037	1-216-864-11	s	CONDUCTOR, CHIP (1608)
R1038	1-216-864-11	s	CONDUCTOR, CHIP (1608)
R1039	1-216-864-11	s	CONDUCTOR, CHIP (1608)
R1040	1-216-864-11	s	CONDUCTOR, CHIP (1608)
R1052	1-218-895-11	s	RESISTOR,CHIP 100K 1/10W(1608)
R1053	1-218-895-11	s	RESISTOR,CHIP 100K 1/10W(1608)
R1054	1-216-864-11	s	CONDUCTOR, CHIP (1608)
RB100	1-233-810-21	s	RES, NETWORK 100K (3216)
RB101	1-233-810-21	s	RES, NETWORK 100K (3216)
RB102	1-239-409-11	s	RESISTOR NETWORK 47 (3216)
RB103	1-239-409-11	s	RESISTOR NETWORK 47 (3216)
RB104	1-233-810-21	s	RES, NETWORK 100K (3216)
RB106	1-234-397-11	s	NETWORK, RES (8 GANG) 100K
RB107	1-234-397-11	s	NETWORK, RES (8 GANG) 100K
RB108	1-233-575-11	s	RES, CHIP NETWORK 22
RB109	1-233-575-11	s	RES, CHIP NETWORK 22
RB110	1-233-575-11	s	RES, CHIP NETWORK 22
RB111	1-233-575-11	s	RES, CHIP NETWORK 22
RB112	1-233-575-11	s	RES, CHIP NETWORK 22
RB113	1-234-397-11	s	NETWORK, RES (8 GANG) 100K
RB114	1-233-576-11	s	RESISTOR,CHIP NETWORK 100
RB115	1-233-576-11	s	RESISTOR,CHIP NETWORK 100
RB116	1-233-810-21	s	RES, NETWORK 100K (3216)
RB117	1-234-397-11	s	NETWORK, RES (8 GANG) 100K
RB118	1-234-397-11	s	NETWORK, RES (8 GANG) 100K
RB119	1-234-397-11	s	NETWORK, RES (8 GANG) 100K
RB120	1-234-397-11	s	NETWORK, RES (8 GANG) 100K
RB121	1-233-576-11	s	RESISTOR,CHIP NETWORK 100
RB122	1-233-576-11	s	RESISTOR,CHIP NETWORK 100
RB123	1-234-397-11	s	NETWORK, RES (8 GANG) 100K
RB200	1-233-411-11	s	RESISTOR,CHIP NETWORK 220/3216
RB201	1-233-411-11	s	RESISTOR,CHIP NETWORK 220/3216
RB202	1-233-411-11	s	RESISTOR,CHIP NETWORK 220/3216
RB203	1-233-411-11	s	RESISTOR,CHIP NETWORK 220/3216
RB204	1-233-411-11	s	RESISTOR,CHIP NETWORK 220/3216
RB205	1-233-575-11	s	RES, CHIP NETWORK 22
RB206	1-233-575-11	s	RES, CHIP NETWORK 22
RB213	1-239-409-11	s	RESISTOR NETWORK 47 (3216)
RB214	1-239-409-11	s	RESISTOR NETWORK 47 (3216)
RB215	1-239-409-11	s	RESISTOR NETWORK 47 (3216)
RB216	1-239-409-11	s	RESISTOR NETWORK 47 (3216)
RB217	1-239-409-11	s	RESISTOR NETWORK 47 (3216)
RB218	1-239-409-11	s	RESISTOR NETWORK 47 (3216)
RB700	1-233-810-21	s	RES, NETWORK 100K (3216)
RB701	1-233-810-21	s	RES, NETWORK 100K (3216)
RB702	1-233-810-21	s	RES, NETWORK 100K (3216)
RB703	1-233-810-21	s	RES, NETWORK 100K (3216)
RB704	1-233-810-21	s	RES, NETWORK 100K (3216)
RB705	1-233-810-21	s	RES, NETWORK 100K (3216)
RB706	1-233-810-21	s	RES, NETWORK 100K (3216)
RB707	1-233-810-21	s	RES, NETWORK 100K (3216)
RB708	1-233-810-21	s	RES, NETWORK 100K (3216)

(DPR-229HS BOARD [SUFFIX 14-])

Ref. No. or Q'ty	Part No.	SP	Description
RB709	1-234-397-11	s	NETWORK, RES (8 GANG) 100K
RB710	1-234-397-11	s	NETWORK, RES (8 GANG) 100K
RB801	1-233-810-21	s	RES, NETWORK 100K (3216)
RB804	1-233-411-11	s	RESISTOR,CHIP NETWORK 220/3216
RB805	1-233-411-11	s	RESISTOR,CHIP NETWORK 220/3216
RB806	1-233-411-11	s	RESISTOR,CHIP NETWORK 220/3216
RB807	1-233-414-11	s	RESISTOR,CHIP NETWORK 4.7K
RB808	1-239-409-11	s	RESISTOR NETWORK 47 (3216)
RB809	1-239-409-11	s	RESISTOR NETWORK 47 (3216)
RB810	1-239-409-11	s	RESISTOR NETWORK 47 (3216)
RB811	1-239-409-11	s	RESISTOR NETWORK 47 (3216)
RB812	1-239-409-11	s	RESISTOR NETWORK 47 (3216)
RB813	1-233-810-21	s	RES, NETWORK 100K (3216)
RB814	1-233-810-21	s	RES, NETWORK 100K (3216)
RB815	1-233-810-21	s	RES, NETWORK 100K (3216)
RB816	1-233-810-21	s	RES, NETWORK 100K (3216)
RB817	1-233-414-11	s	RESISTOR,CHIP NETWORK 4.7K
RB818	1-236-908-11	s	RESISTOR,NETWORK 10K (3216)
X200	1-781-809-21	s	OSCILLATOR, CRYSTAL (SMD)

DR-414 BOARD

[Lot No. 261 - 424] HDW-2000, M2000/P, M2100/P, A2100
MSW-2000, M2000/P, A2000/P, M2100/P

Ref. No. or Q'ty	Part No.	SP	Description
1pc	A-8324-872-B	s	MOUNTED CIRCUIT BOARD, DR-414
3pcs	3-624-978-01	o	P HOLDER
3pcs	7-682-953-09	s	SCREW +PSW 3X20
C100	1-115-416-11	s	CAPACITOR,CERAMIC 1000PF/25V
C101	1-115-416-11	s	CAPACITOR,CERAMIC 1000PF/25V
C102	1-115-416-11	s	CAPACITOR,CERAMIC 1000PF/25V
C103	1-115-416-11	s	CAPACITOR,CERAMIC 1000PF/25V
C104	1-115-416-11	s	CAPACITOR,CERAMIC 1000PF/25V
C105	1-115-416-11	s	CAPACITOR,CERAMIC 1000PF/25V
C106	1-115-416-11	s	CAPACITOR,CERAMIC 1000PF/25V
C107	1-115-416-11	s	CAPACITOR,CERAMIC 1000PF/25V
C108	1-162-970-11	s	CAPACITOR CERAMIC 0.01MF/25V B
C109	1-115-416-11	s	CAPACITOR,CERAMIC 1000PF/25V
C110	1-162-916-11	s	CAPACITOR,CERAMIC 12PF/50V CH
C111	1-164-156-11	s	CAPACITOR,CERAMIC 0.1MF/25V F
C112	1-162-916-11	s	CAPACITOR,CERAMIC 12PF/50V CH
C113	1-164-156-11	s	CAPACITOR,CERAMIC 0.1MF/25V F
C114	1-164-156-11	s	CAPACITOR,CERAMIC 0.1MF/25V F
C115	1-107-826-11	s	CAPACITOR,CHIP CERAMIC 0.1MF
C116	1-107-826-11	s	CAPACITOR,CHIP CERAMIC 0.1MF
C117	1-164-156-11	s	CAPACITOR,CERAMIC 0.1MF/25V F
C118	1-107-826-11	s	CAPACITOR,CHIP CERAMIC 0.1MF
C119	1-107-826-11	s	CAPACITOR,CHIP CERAMIC 0.1MF
C120	1-107-826-11	s	CAPACITOR,CHIP CERAMIC 0.1MF
C200	1-164-156-11	s	CAPACITOR,CERAMIC 0.1MF/25V F
C201	1-164-156-11	s	CAPACITOR,CERAMIC 0.1MF/25V F
C202	1-164-156-11	s	CAPACITOR,CERAMIC 0.1MF/25V F
C203	1-164-156-11	s	CAPACITOR,CERAMIC 0.1MF/25V F
C204	1-164-156-11	s	CAPACITOR,CERAMIC 0.1MF/25V F
C205	1-164-156-11	s	CAPACITOR,CERAMIC 0.1MF/25V F
C206	1-164-156-11	s	CAPACITOR,CERAMIC 0.1MF/25V F
C207	1-164-156-11	s	CAPACITOR,CERAMIC 0.1MF/25V F
C208	1-164-156-11	s	CAPACITOR,CERAMIC 0.1MF/25V F
C209	1-164-156-11	s	CAPACITOR,CERAMIC 0.1MF/25V F
C210	1-164-156-11	s	CAPACITOR,CERAMIC 0.1MF/25V F
C211	1-164-156-11	s	CAPACITOR,CERAMIC 0.1MF/25V F
C212	1-164-156-11	s	CAPACITOR,CERAMIC 0.1MF/25V F
C213	1-164-156-11	s	CAPACITOR,CERAMIC 0.1MF/25V F
C214	1-164-156-11	s	CAPACITOR,CERAMIC 0.1MF/25V F
C215	1-164-156-11	s	CAPACITOR,CERAMIC 0.1MF/25V F
C216	1-164-156-11	s	CAPACITOR,CERAMIC 0.1MF/25V F
C217	1-164-156-11	s	CAPACITOR,CERAMIC 0.1MF/25V F
C218	1-164-156-11	s	CAPACITOR,CERAMIC 0.1MF/25V F
C219	1-164-156-11	s	CAPACITOR,CERAMIC 0.1MF/25V F
C300	1-164-156-11	s	CAPACITOR,CERAMIC 0.1MF/25V F
C301	1-164-156-11	s	CAPACITOR,CERAMIC 0.1MF/25V F
C302	1-162-970-11	s	CAPACITOR CERAMIC 0.01MF/25V B
C304	1-162-965-11	s	CAPACITOR,CERAMIC 1500PF/50V B
C305	1-162-966-11	s	CAPACITOR,CERAMIC 2200PF/50V B
C306	1-107-894-11	s	CAPACITOR ELECT 220MF/35V
C308	1-164-227-11	s	CAPACITOR,CERAMIC 0.022MF/25V
C309	1-115-783-11	s	CAPACITOR,ELECT 220MF/25V 105C
C310	1-115-783-11	s	CAPACITOR,ELECT 220MF/25V 105C
C312	1-164-156-11	s	CAPACITOR,CERAMIC 0.1MF/25V F
C313	1-164-156-11	s	CAPACITOR,CERAMIC 0.1MF/25V F
C314	1-162-966-11	s	CAPACITOR,CERAMIC 2200PF/50V B

(DR-414 BOARD)

Ref. No. or Q'ty	Part No.	SP	Description
C315	1-164-156-11	s	CAPACITOR,CERAMIC 0.1MF/25V F
C316	1-107-420-11	s	CAPACITOR,ELECT 47MF/35V(105C)
C317	1-162-966-11	s	CAPACITOR,CERAMIC 2200PF/50V B
C318	1-107-826-11	s	CAPACITOR,CHIP CERAMIC 0.1MF
C319	1-162-966-11	s	CAPACITOR,CERAMIC 2200PF/50V B
C320	1-107-826-11	s	CAPACITOR,CHIP CERAMIC 0.1MF
C321	1-125-891-11	s	CAPACITOR CERAMIC 0.47MF/10V
C324	1-125-891-11	s	CAPACITOR CERAMIC 0.47MF/10V
C327	1-107-420-11	s	CAPACITOR,ELECT 47MF/35V(105C)
C328	1-164-156-11	s	CAPACITOR,CERAMIC 0.1MF/25V F
C330	1-107-420-11	s	CAPACITOR,ELECT 47MF/35V(105C)
C331	1-164-156-11	s	CAPACITOR,CERAMIC 0.1MF/25V F
C400	1-162-970-11	s	CAPACITOR CERAMIC 0.01MF/25V B
C401	1-164-156-11	s	CAPACITOR,CERAMIC 0.1MF/25V F
C402	1-162-965-11	s	CAPACITOR,CERAMIC 1500PF/50V B
C403	1-162-966-11	s	CAPACITOR,CERAMIC 2200PF/50V B
C404	1-164-156-11	s	CAPACITOR,CERAMIC 0.1MF/25V F
C405	1-107-420-11	s	CAPACITOR,ELECT 47MF/35V(105C)
C406	1-164-227-11	s	CAPACITOR,CERAMIC 0.022MF/25V
C407	1-115-783-11	s	CAPACITOR,ELECT 220MF/25V 105C
C408	1-162-966-11	s	CAPACITOR,CERAMIC 2200PF/50V B
C409	1-164-156-11	s	CAPACITOR,CERAMIC 0.1MF/25V F
C410	1-164-156-11	s	CAPACITOR,CERAMIC 0.1MF/25V F
C412	1-164-156-11	s	CAPACITOR,CERAMIC 0.1MF/25V F
C414	1-164-156-11	s	CAPACITOR,CERAMIC 0.1MF/25V F
C415	1-164-156-11	s	CAPACITOR,CERAMIC 0.1MF/25V F
C416	1-125-891-11	s	CAPACITOR CERAMIC 0.47MF/10V
C500	1-164-156-11	s	CAPACITOR,CERAMIC 0.1MF/25V F
C502	1-164-156-11	s	CAPACITOR,CERAMIC 0.1MF/25V F
C504	1-164-227-11	s	CAPACITOR,CERAMIC 0.022MF/25V
C505	1-164-227-11	s	CAPACITOR,CERAMIC 0.022MF/25V
C506	1-107-420-11	s	CAPACITOR,ELECT 47MF/35V(105C)
C507	1-164-227-11	s	CAPACITOR,CERAMIC 0.022MF/25V
C508	1-164-227-11	s	CAPACITOR,CERAMIC 0.022MF/25V
C509	1-164-227-11	s	CAPACITOR,CERAMIC 0.022MF/25V
C510	1-164-227-11	s	CAPACITOR,CERAMIC 0.022MF/25V
C512	1-126-399-11	s	CAPACITOR ELECT 10MF/35V(CHIP)
C513	1-126-399-11	s	CAPACITOR ELECT 10MF/35V(CHIP)
C514	1-126-399-11	s	CAPACITOR ELECT 10MF/35V(CHIP)
C515	1-115-416-11	s	CAPACITOR,CERAMIC 1000PF/25V
C516	1-115-800-11	s	CAPACITOR ELECT 27MF/35V 105C
C517	1-162-970-11	s	CAPACITOR CERAMIC 0.01MF/25V B
C518	1-162-970-11	s	CAPACITOR CERAMIC 0.01MF/25V B
C519	1-162-970-11	s	CAPACITOR CERAMIC 0.01MF/25V B
C520	1-128-401-11	s	CAPACITOR,ELECT100MF/25V(CHIP)
C521	1-107-826-11	s	CAPACITOR,CHIP CERAMIC 0.1MF
C522	1-107-826-11	s	CAPACITOR,CHIP CERAMIC 0.1MF
C600	1-162-967-11	s	CAPACITOR,CERAMIC 3300PF/50V B
C601	1-162-967-11	s	CAPACITOR,CERAMIC 3300PF/50V B
C602	1-162-968-11	s	CAPACITOR,CERAMIC 4700PF/50V B
C605	1-165-176-11	s	CAPACITOR,CERAMIC 47000PF/16V
C606	1-165-176-11	s	CAPACITOR,CERAMIC 47000PF/16V
C607	1-164-156-11	s	CAPACITOR,CERAMIC 0.1MF/25V F
C608	1-164-156-11	s	CAPACITOR,CERAMIC 0.1MF/25V F
C609	1-162-959-11	s	CAPACITOR,CERAMIC 330PF/50V SL
C610	1-162-959-11	s	CAPACITOR,CERAMIC 330PF/50V SL
C611	1-126-397-11	s	CAPACITOR ELECT 33MF/25V(CHIP)
C612	1-126-397-11	s	CAPACITOR ELECT 33MF/25V(CHIP)
C613	1-126-399-11	s	CAPACITOR ELECT 10MF/35V(CHIP)

(DR-414 BOARD)

Ref. No. or Q'ty	Part No.	SP	Description
C614	1-164-230-11	s	CAPACITOR,CERAMIC 220PF/50V
C615	1-164-156-11	s	CAPACITOR,CERAMIC 0.1MF/25V F
C616	1-165-112-11	s	CAPACITOR,CERAMIC 0.33MF/16V F
C618	1-128-964-11	s	CAPACITOR,TANTALUM 100MF/6.3V
C620	1-128-964-11	s	CAPACITOR,TANTALUM 100MF/6.3V
C621	1-164-156-11	s	CAPACITOR,CERAMIC 0.1MF/25V F
C622	1-164-156-11	s	CAPACITOR,CERAMIC 0.1MF/25V F
C623	1-162-970-11	s	CAPACITOR CERAMIC 0.01MF/25V B
C624	1-164-227-11	s	CAPACITOR,CERAMIC 0.022MF/25V
C626	1-164-156-11	s	CAPACITOR,CERAMIC 0.1MF/25V F
C627	1-164-156-11	s	CAPACITOR,CERAMIC 0.1MF/25V F
C628	1-162-970-11	s	CAPACITOR CERAMIC 0.01MF/25V B
C629	1-126-397-11	s	CAPACITOR ELECT 33MF/25V(CHIP)
C630	1-164-156-11	s	CAPACITOR,CERAMIC 0.1MF/25V F
C631	1-164-156-11	s	CAPACITOR,CERAMIC 0.1MF/25V F
C632	1-126-396-11	s	CAPACITOR,ELECT 47MF/16V(CHIP)
C633	1-164-156-11	s	CAPACITOR,CERAMIC 0.1MF/25V F
C634	1-164-156-11	s	CAPACITOR,CERAMIC 0.1MF/25V F
C635	1-162-966-11	s	CAPACITOR,CERAMIC 2200PF/50V B
C700	1-126-394-11	s	CAPACITOR,ELECT 10MF/16V(CHIP)
C701	1-164-156-11	s	CAPACITOR,CERAMIC 0.1MF/25V F
C702	1-107-686-11	s	CAPACITOR,TANTALUM 4.7MF/16V
C703	1-162-927-11	s	CAPACITOR,CERAMIC 100PF/50V CH
C704	1-107-894-11	s	CAPACITOR ELECT 220MF/35V
C705	1-128-401-11	s	CAPACITOR,ELECT100MF/25V(CHIP)
C706	1-128-401-11	s	CAPACITOR,ELECT100MF/25V(CHIP)
C707	1-128-401-11	s	CAPACITOR,ELECT100MF/25V(CHIP)
C708	1-126-397-11	s	CAPACITOR ELECT 33MF/25V(CHIP)
C709	1-162-965-11	s	CAPACITOR,CERAMIC 1500PF/50V B
C710	1-164-227-11	s	CAPACITOR,CERAMIC 0.022MF/25V
C711	1-164-227-11	s	CAPACITOR,CERAMIC 0.022MF/25V
C712	1-164-156-11	s	CAPACITOR,CERAMIC 0.1MF/25V F
C713	1-162-966-11	s	CAPACITOR,CERAMIC 2200PF/50V B
C714	1-126-397-11	s	CAPACITOR ELECT 33MF/25V(CHIP)
C715	1-128-401-11	s	CAPACITOR,ELECT100MF/25V(CHIP)
C716	1-164-227-11	s	CAPACITOR,CERAMIC 0.022MF/25V
C717	1-164-156-11	s	CAPACITOR,CERAMIC 0.1MF/25V F
C719	1-164-227-11	s	CAPACITOR,CERAMIC 0.022MF/25V
C720	1-115-783-11	s	CAPACITOR,ELECT 220MF/25V 105C
C721	1-115-783-11	s	CAPACITOR,ELECT 220MF/25V 105C
C722	1-107-686-11	s	CAPACITOR,TANTALUM 4.7MF/16V
C723	1-107-686-11	s	CAPACITOR,TANTALUM 4.7MF/16V
C724	1-164-156-11	s	CAPACITOR,CERAMIC 0.1MF/25V F
C725	1-164-156-11	s	CAPACITOR,CERAMIC 0.1MF/25V F
C726	1-164-315-11	s	CAPACITOR,CERAMIC 470PF/50V CH
C729	1-126-399-11	s	CAPACITOR ELECT 10MF/35V(CHIP)
C730	1-119-751-11	s	CAPACITOR,TANTALUM 22MF/16V
C731	1-164-156-11	s	CAPACITOR,CERAMIC 0.1MF/25V F
C733	1-164-156-11	s	CAPACITOR,CERAMIC 0.1MF/25V F
C736	1-107-420-11	s	CAPACITOR,ELECT 47MF/35V(105C)
C739	1-162-927-11	s	CAPACITOR,CERAMIC 100PF/50V CH
C740	1-162-927-11	s	CAPACITOR,CERAMIC 100PF/50V CH
C741	1-135-346-11	s	CAP, SOLID ELECT 39MF 16V
C742	1-135-346-11	s	CAP, SOLID ELECT 39MF 16V
C743	1-164-156-11	s	CAPACITOR,CERAMIC 0.1MF/25V F
C744	1-164-156-11	s	CAPACITOR,CERAMIC 0.1MF/25V F
C745	1-135-346-11	s	CAP, SOLID ELECT 39MF 16V
C746	1-135-346-11	s	CAP, SOLID ELECT 39MF 16V
C747	1-162-964-11	s	CAPACITOR,CERAMIC 1000PF/50V B

(DR-414 BOARD)

Ref. No. or Q'ty	Part No.	SP	Description
C750	1-164-156-11	s	CAPACITOR,CERAMIC 0.1MF/25V F
C751	1-107-686-11	s	CAPACITOR,TANTALUM 4.7MF/16V
C752	1-162-927-11	s	CAPACITOR,CERAMIC 100PF/50V CH
C753	1-162-965-11	s	CAPACITOR,CERAMIC 1500PF/50V B
C754	1-164-156-11	s	CAPACITOR,CERAMIC 0.1MF/25V F
C755	1-164-156-11	s	CAPACITOR,CERAMIC 0.1MF/25V F
C756	1-162-966-11	s	CAPACITOR,CERAMIC 2200PF/50V B
C757	1-162-964-11	s	CAPACITOR,CERAMIC 1000PF/50V B
C758	1-164-227-11	s	CAPACITOR,CERAMIC 0.022MF/25V
C759	1-164-227-11	s	CAPACITOR,CERAMIC 0.022MF/25V
C760	1-164-227-11	s	CAPACITOR,CERAMIC 0.022MF/25V
C762	1-164-227-11	s	CAPACITOR,CERAMIC 0.022MF/25V
C763	1-115-783-11	s	CAPACITOR,ELECT 220MF/25V 105C
C764	1-115-783-11	s	CAPACITOR,ELECT 220MF/25V 105C
C800	1-162-970-11	s	CAPACITOR CERAMIC 0.01MF/25V B
C803	1-164-156-11	s	CAPACITOR,CERAMIC 0.1MF/25V F
C804	1-164-156-11	s	CAPACITOR,CERAMIC 0.1MF/25V F
C805	1-164-227-11	s	CAPACITOR,CERAMIC 0.022MF/25V
C806	1-107-826-11	s	CAPACITOR,CHIP CERAMIC 0.1MF
C807	1-164-227-11	s	CAPACITOR,CERAMIC 0.022MF/25V
C808	1-162-966-11	s	CAPACITOR,CERAMIC 2200PF/50V B
C809	1-164-156-11	s	CAPACITOR,CERAMIC 0.1MF/25V F
C810	1-164-388-11	s	CAPACITOR,CERAMIC 270PF/50V CH
C811	1-164-388-11	s	CAPACITOR,CERAMIC 270PF/50V CH
C812	1-126-399-11	s	CAPACITOR ELECT 10MF/35V(CHIP)
C813	1-164-156-11	s	CAPACITOR,CERAMIC 0.1MF/25V F
C816	1-162-927-11	s	CAPACITOR,CERAMIC 100PF/50V CH
C817	1-115-800-11	s	CAPACITOR ELECT 27MF/35V 105C
C818	1-107-910-11	s	CAPACITOR,ELECT 100MF/50V
C819	1-115-800-11	s	CAPACITOR ELECT 27MF/35V 105C
C823	1-164-156-11	s	CAPACITOR,CERAMIC 0.1MF/25V F
C824	1-164-156-11	s	CAPACITOR,CERAMIC 0.1MF/25V F
C1000	1-162-970-11	s	CAPACITOR CERAMIC 0.01MF/25V B
C1001	1-164-156-11	s	CAPACITOR,CERAMIC 0.1MF/25V F
C1002	1-164-156-11	s	CAPACITOR,CERAMIC 0.1MF/25V F
C1003	1-164-156-11	s	CAPACITOR,CERAMIC 0.1MF/25V F
C1004	1-164-156-11	s	CAPACITOR,CERAMIC 0.1MF/25V F
C1005	1-164-227-11	s	CAPACITOR,CERAMIC 0.022MF/25V
C1006	1-107-826-11	s	CAPACITOR,CHIP CERAMIC 0.1MF
C1007	1-164-227-11	s	CAPACITOR,CERAMIC 0.022MF/25V
C1008	1-162-966-11	s	CAPACITOR,CERAMIC 2200PF/50V B
C1009	1-164-156-11	s	CAPACITOR,CERAMIC 0.1MF/25V F
C1010	1-164-388-11	s	CAPACITOR,CERAMIC 270PF/50V CH
C1011	1-164-388-11	s	CAPACITOR,CERAMIC 270PF/50V CH
C1012	1-126-399-11	s	CAPACITOR ELECT 10MF/35V(CHIP)
C1013	1-164-156-11	s	CAPACITOR,CERAMIC 0.1MF/25V F
C1016	1-162-927-11	s	CAPACITOR,CERAMIC 100PF/50V CH
C1017	1-115-800-11	s	CAPACITOR ELECT 27MF/35V 105C
C1018	1-107-910-11	s	CAPACITOR,ELECT 100MF/50V
C1019	1-115-800-11	s	CAPACITOR ELECT 27MF/35V 105C
C1023	1-164-156-11	s	CAPACITOR,CERAMIC 0.1MF/25V F
C1024	1-164-156-11	s	CAPACITOR,CERAMIC 0.1MF/25V F
CN61	1-792-489-11	o	WIRE ASSEMBLY, FLAT TYPE
CN62	1-792-489-11	o	WIRE ASSEMBLY, FLAT TYPE
CN65	1-691-959-11	o	PIN,CONNECTOR (PC BOARD) 4P
CN200	1-778-552-11	o	PIN, CONNECTOR 30P
CN201	1-778-551-11	o	PIN, CONNECTOR 20P
CN202	1-750-934-21	o	PIN, CONNECTOR (PC BOARD) 20P

(DR-414 BOARD)

Ref. No. or Q'ty	Part No.	SP	Description
CN203	1-506-473-11	s	PIN,CONNECTOR 8P
CN204	1-569-363-21	s	CONNECTOR, FPC 15P
CN205	1-569-363-21	s	CONNECTOR, FPC 15P
CN206	1-764-177-11	o	PIN,CONNECTOR (7P)(SMD)(1.5MM)
CN207	1-766-382-11	s	PIN, CONNECTOR (10P)(SMD)(1.5M
CN208	1-506-477-11	o	PIN,CONNECTOR 12P
CN210	1-779-268-21	o	PIN, CONNECTOR (11P)(SMD)(1.5M
CN212	1-691-550-11	s	PIN,CONNECTOR (3P)(SMD)(1.5MM)
CN213	1-564-001-11	o	PIN, CONNECTOR (2P)
CN214	1-564-001-11	o	PIN, CONNECTOR (2P)
CN215	1-695-320-21	o	PIN, CONNECTOR(1.5MM)SMD 2P
CN216	1-506-476-11	s	PIN,CONNECTOR 11P
D200	8-719-801-78	s	DIODE 1SS184
D201	8-719-801-78	s	DIODE 1SS184
D202	8-719-801-78	s	DIODE 1SS184
D203	8-719-801-78	s	DIODE 1SS184
D204	8-719-024-81	s	DIODE 1SS300-TE85L
D205	8-719-024-81	s	DIODE 1SS300-TE85L
D206	8-719-024-81	s	DIODE 1SS300-TE85L
D207	8-719-024-81	s	DIODE 1SS300-TE85L
D208	8-719-801-78	s	DIODE 1SS184
D209	8-719-801-78	s	DIODE 1SS184
D210	8-719-801-78	s	DIODE 1SS184
D211	8-719-801-78	s	DIODE 1SS184
D212	8-719-024-81	s	DIODE 1SS300-TE85L
D213	8-719-024-81	s	DIODE 1SS300-TE85L
D214	8-719-024-81	s	DIODE 1SS300-TE85L
D215	8-719-024-81	s	DIODE 1SS300-TE85L
D216	8-719-801-78	s	DIODE 1SS184
D217	8-719-801-78	s	DIODE 1SS184
D218	8-719-801-78	s	DIODE 1SS184
D219	8-719-801-78	s	DIODE 1SS184
D220	8-719-024-81	s	DIODE 1SS300-TE85L
D221	8-719-024-81	s	DIODE 1SS300-TE85L
D222	8-719-024-81	s	DIODE 1SS300-TE85L
D223	8-719-024-81	s	DIODE 1SS300-TE85L
D224	8-719-801-78	s	DIODE 1SS184
D225	8-719-801-78	s	DIODE 1SS184
D226	8-719-801-78	s	DIODE 1SS184
D227	8-719-801-78	s	DIODE 1SS184
D228	8-719-024-81	s	DIODE 1SS300-TE85L
D229	8-719-024-81	s	DIODE 1SS300-TE85L
D230	8-719-024-81	s	DIODE 1SS300-TE85L
D231	8-719-024-81	s	DIODE 1SS300-TE85L
D300	8-719-974-51	s	DIODE SB20-03P
D302	8-719-024-81	s	DIODE 1SS300-TE85L
D303	8-719-024-81	s	DIODE 1SS300-TE85L
D304	8-719-974-51	s	DIODE SB20-03P
D401	8-719-974-51	s	DIODE SB20-03P
D402	8-719-024-81	s	DIODE 1SS300-TE85L
D500	8-719-974-51	s	DIODE SB20-03P
D501	8-719-974-51	s	DIODE SB20-03P
D502	8-719-048-98	s	DIODE RB160L-40TE25
D503	8-719-048-98	s	DIODE RB160L-40TE25
D504	8-719-974-51	s	DIODE SB20-03P
D505	8-719-048-98	s	DIODE RB160L-40TE25
D506	8-719-048-98	s	DIODE RB160L-40TE25
D507	8-719-048-98	s	DIODE RB160L-40TE25

(DR-414 BOARD)

Ref. No. or Q'ty	Part No.	SP	Description
D508	8-719-048-98	s	DIODE RB160L-40TE25
D509	8-719-048-98	s	DIODE RB160L-40TE25
D511	8-719-048-98	s	DIODE RB160L-40TE25
D512	8-719-048-98	s	DIODE RB160L-40TE25
D513	8-719-048-98	s	DIODE RB160L-40TE25
D601	8-719-024-81	s	DIODE 1SS300-TE85L
D700	8-719-974-51	s	DIODE SB20-03P
D701	8-719-974-51	s	DIODE SB20-03P
D702	8-719-974-51	s	DIODE SB20-03P
D703	8-719-974-51	s	DIODE SB20-03P
D800	8-719-024-81	s	DIODE 1SS300-TE85L
D1000	8-719-024-81	s	DIODE 1SS300-TE85L
F400	⚠ 1-576-269-11	s	FUSE CHIP 3.15A/125V (6125)
F500	⚠ 1-576-269-11	s	FUSE CHIP 3.15A/125V (6125)
F700	⚠ 1-533-627-21	s	FUSE CHIP 5A/125V (6125)
F701	⚠ 1-576-269-11	s	FUSE CHIP 3.15A/125V (6125)
F702	⚠ 1-576-212-21	s	FUSE CHIP 1.25A (6125)
F703	⚠ 1-576-212-21	s	FUSE CHIP 1.25A (6125)
F704	⚠ 1-576-212-21	s	FUSE CHIP 1.25A (6125)
F705	⚠ 1-576-212-21	s	FUSE CHIP 1.25A (6125)
F706	⚠ 1-533-627-21	s	FUSE CHIP 5A/125V (6125)
F800	⚠ 1-533-627-21	s	FUSE CHIP 5A/125V (6125)
F1000	⚠ 1-533-627-21	s	FUSE CHIP 5A/125V (6125)
IC1	8-759-491-50	s	IC TC74VHCT244AFT(EL)
IC2	8-759-491-50	s	IC TC74VHCT244AFT(EL)
IC3	8-759-549-15	s	IC SN74LV245APWR
IC4	8-759-549-01	s	IC SN74LV125APWR
IC100	8-752-903-31	o	IC CXP87860-064Q
IC101	8-759-445-94	s	IC AK6480AM-E2
IC102	8-759-543-22	s	IC S-80843ALUP-EA7-T2
IC103	8-759-196-96	s	IC TC7SH08FU (TE85R)
IC104	8-759-523-78	s	IC TC74VHC00FT(EL)
IC200	8-759-523-84	s	IC TC74VHC14FT (EL)
IC201	8-759-523-84	s	IC TC74VHC14FT (EL)
IC202	8-759-523-84	s	IC TC74VHC14FT (EL)
IC203	8-759-833-99	s	IC MC74HC4052ADTR2
IC204	8-759-833-99	s	IC MC74HC4052ADTR2
IC205	8-759-833-99	s	IC MC74HC4052ADTR2
IC206	8-759-833-99	s	IC MC74HC4052ADTR2
IC207	8-759-594-71	s	IC TC7SH14FU-TE85R
IC300	8-759-112-58	s	IC UPC1246G
IC301	8-759-337-40	s	IC NJM2904V(TE2)
IC302	8-759-338-95	s	IC NJM2903V (TE2)
IC303	8-759-338-95	s	IC NJM2903V (TE2)
IC304	8-759-338-95	s	IC NJM2903V (TE2)
IC305	8-759-422-21	s	IC NJM4580VTE2
IC401	8-759-278-58	s	IC NJM4558V (TE2)
IC402	8-759-337-40	s	IC NJM2904V(TE2)
IC410	8-759-422-21	s	IC NJM4580VTE2
IC500	8-759-234-04	s	IC TA7267BP
IC501	8-759-234-04	s	IC TA7267BP
IC502	8-759-234-04	s	IC TA7267BP
IC503	8-759-337-40	s	IC NJM2904V(TE2)
IC504	8-759-337-40	s	IC NJM2904V(TE2)
IC600	8-759-805-32	s	IC LA7205M
IC601	8-759-805-32	s	IC LA7205M
IC602	8-743-914-00	s	IC BX-3914 (HYBRID)
IC603	8-759-523-00	s	IC TC74HC4051AFT(EL)

(DR-414 BOARD)

Ref. No. or Q'ty	Part No.	SP	Description
IC604	8-759-466-50	s	IC NJM78M12DLA(TE1)
IC605	8-759-300-71	s	IC HD14053BFP
IC606	8-759-106-02	s	IC UPC4570G2
IC607	8-759-106-02	s	IC UPC4570G2
IC609	8-759-300-71	s	IC HD14053BFP
IC610	8-759-523-78	s	IC TC74VHC00FT(EL)
IC700	8-759-183-53	s	IC TL431CPK-E2
IC701	8-759-937-36	s	IC TL1451ACNS
IC703	8-759-157-17	s	IC PQ05SZ1U
IC704	8-759-278-58	s	IC NJM4558V (TE2)
IC705	8-759-337-40	s	IC NJM2904V(TE2)
IC706	8-759-338-95	s	IC NJM2903V (TE2)
IC707	8-759-338-95	s	IC NJM2903V (TE2)
IC708	8-759-337-40	s	IC NJM2904V(TE2)
IC800	8-759-278-58	s	IC NJM4558V (TE2)
IC801	8-759-906-22	s	IC MB3759PF
IC802	8-759-422-21	s	IC NJM4580VTE2
IC804	8-759-523-87	s	IC TC4049BF
IC805	8-759-278-58	s	IC NJM4558V (TE2)
IC1000	8-759-278-58	s	IC NJM4558V (TE2)
IC1001	8-759-906-22	s	IC MB3759PF
IC1002	8-759-422-21	s	IC NJM4580VTE2
IC1004	8-759-523-87	s	IC TC4049BF
L300	1-406-749-11	s	COIL, CHOKE 100UH
L400	1-414-529-21	s	INDUCTOR (POWER)
L500	1-414-529-21	s	INDUCTOR (POWER)
L600	1-414-404-11	s	INDUCTOR (SMD) 100UH
L601	1-414-404-11	s	INDUCTOR (SMD) 100UH
L700	1-406-749-11	s	COIL, CHOKE 100UH
L701	1-416-344-11	s	COIL, CHOKE 10UH
L702	1-416-344-11	s	COIL, CHOKE 10UH
L703	1-416-344-11	s	COIL, CHOKE 10UH
L704	1-416-344-11	s	COIL, CHOKE 10UH
L705	1-416-344-11	s	COIL, CHOKE 10UH
L706	1-414-993-21	s	INDUCTOR (POWER) 47UH
L707	1-414-993-21	s	INDUCTOR (POWER) 47UH
L708	1-416-344-11	s	COIL, CHOKE 10UH
L709	1-416-344-11	s	COIL, CHOKE 10UH
L710	1-416-344-11	s	COIL, CHOKE 10UH
L711	1-406-749-11	s	COIL, CHOKE 100UH
L800	1-414-993-21	s	INDUCTOR (POWER) 47UH
L801	1-414-993-21	s	INDUCTOR (POWER) 47UH
L1000	1-414-993-21	s	INDUCTOR (POWER) 47UH
L1001	1-414-993-21	s	INDUCTOR (POWER) 47UH
PH200	8-719-939-05	s	PHOTO INTERRUPTER GP1S54
PH201	8-719-939-05	s	PHOTO INTERRUPTER GP1S54
PH202	8-719-939-05	s	PHOTO INTERRUPTER GP1S54
PH203	8-719-939-05	s	PHOTO INTERRUPTER GP1S54
PH204	8-719-939-05	s	PHOTO INTERRUPTER GP1S54
Q100	8-729-039-57	s	TRANSISTOR DTC363EKT146
Q101	8-729-029-14	s	TRANSISTOR DTC144EUA-T106
Q102	8-729-029-14	s	TRANSISTOR DTC144EUA-T106
Q103	8-729-044-58	s	TRANSISTOR SI2304DS-T1
Q200	8-729-140-63	s	TRANSISTOR 2SA1611-M5M6
Q201	8-729-029-14	s	TRANSISTOR DTC144EUA-T106
Q204	8-729-046-75	s	TRANSISTOR SI2301DS-T1
Q205	8-729-044-58	s	TRANSISTOR SI2304DS-T1
Q300	8-729-117-32	s	TRANSISTOR 2SC4177

(DR-414 BOARD)

Ref. No. or Q'ty	Part No.	SP	Description
Q301	8-729-140-63	s	TRANSISTOR 2SA1611-M5M6
Q302	8-729-040-75	s	TRANSISTOR SI4953DY
Q303	8-729-029-14	s	TRANSISTOR DTC144EUA-T106
Q304	8-729-907-00	s	TRANSISTOR DTC114EU
Q305	8-729-140-63	s	TRANSISTOR 2SA1611-M5M6
Q306	8-729-117-32	s	TRANSISTOR 2SC4177
Q307	8-729-047-32	s	TRANSISTOR SI4425DY-T1
Q308	8-729-046-11	s	TRANSISTOR SI4420DY-T1
Q309	8-729-907-00	s	TRANSISTOR DTC114EU
Q310	8-729-140-63	s	TRANSISTOR 2SA1611-M5M6
Q311	8-729-117-32	s	TRANSISTOR 2SC4177
Q312	8-729-047-32	s	TRANSISTOR SI4425DY-T1
Q313	8-729-046-11	s	TRANSISTOR SI4420DY-T1
Q314	8-729-907-00	s	TRANSISTOR DTC114EU
Q315	8-729-140-63	s	TRANSISTOR 2SA1611-M5M6
Q316	8-729-117-32	s	TRANSISTOR 2SC4177
Q317	8-729-047-32	s	TRANSISTOR SI4425DY-T1
Q318	8-729-046-11	s	TRANSISTOR SI4420DY-T1
Q319	8-729-140-63	s	TRANSISTOR 2SA1611-M5M6
Q323	8-729-209-07	s	TRANSISTOR 2SC4213-B
Q400	8-729-117-32	s	TRANSISTOR 2SC4177
Q401	8-729-140-63	s	TRANSISTOR 2SA1611-M5M6
Q426	8-729-040-75	s	TRANSISTOR SI4953DY
Q500	8-729-907-00	s	TRANSISTOR DTC114EU
Q501	8-729-117-32	s	TRANSISTOR 2SC4177
Q502	8-729-140-63	s	TRANSISTOR 2SA1611-M5M6
Q503	8-729-024-50	s	TRANSISTOR SI9936DY
Q504	8-729-024-50	s	TRANSISTOR SI9936DY
Q505	8-729-024-50	s	TRANSISTOR SI9936DY
Q506	8-729-024-50	s	TRANSISTOR SI9936DY
Q603	8-729-907-00	s	TRANSISTOR DTC114EU
Q604	8-729-907-00	s	TRANSISTOR DTC114EU
Q605	8-729-140-63	s	TRANSISTOR 2SA1611-M5M6
Q700	8-729-907-00	s	TRANSISTOR DTC114EU
Q701	8-729-029-14	s	TRANSISTOR DTC144EUA-T106
Q702	8-729-907-00	s	TRANSISTOR DTC114EU
Q703	8-729-117-32	s	TRANSISTOR 2SC4177
Q704	8-729-140-63	s	TRANSISTOR 2SA1611-M5M6
Q705	8-729-029-14	s	TRANSISTOR DTC144EUA-T106
Q706	8-729-040-75	s	TRANSISTOR SI4953DY
Q708	8-729-040-75	s	TRANSISTOR SI4953DY
Q709	8-729-907-00	s	TRANSISTOR DTC114EU
Q711	8-729-117-32	s	TRANSISTOR 2SC4177
Q712	8-729-140-63	s	TRANSISTOR 2SA1611-M5M6
Q713	8-729-117-32	s	TRANSISTOR 2SC4177
Q714	8-729-140-63	s	TRANSISTOR 2SA1611-M5M6
Q715	8-729-046-75	s	TRANSISTOR SI2301DS-T1
Q716	8-729-046-75	s	TRANSISTOR SI2301DS-T1
Q717	8-729-046-75	s	TRANSISTOR SI2301DS-T1
Q718	8-729-907-00	s	TRANSISTOR DTC114EU
Q719	8-729-140-63	s	TRANSISTOR 2SA1611-M5M6
Q720	8-729-117-32	s	TRANSISTOR 2SC4177
Q721	8-729-117-32	s	TRANSISTOR 2SC4177
Q722	8-729-140-63	s	TRANSISTOR 2SA1611-M5M6
Q723	8-729-808-02	s	TRANSISTOR 2SD1622
Q724	8-729-106-60	s	TRANSISTOR 2SB1115A
Q725	8-729-117-32	s	TRANSISTOR 2SC4177
Q726	8-729-140-63	s	TRANSISTOR 2SA1611-M5M6
Q800	8-729-907-00	s	TRANSISTOR DTC114EU

(DR-414 BOARD)

Ref. No. or Q'ty	Part No.	SP	Description
Q801	8-729-029-14	s	TRANSISTOR DTC144EUA-T106
Q802	8-729-117-32	s	TRANSISTOR 2SC4177
Q803	8-729-140-63	s	TRANSISTOR 2SA1611-M5M6
Q804	8-729-117-32	s	TRANSISTOR 2SC4177
Q805	8-729-140-63	s	TRANSISTOR 2SA1611-M5M6
Q806	8-729-040-75	s	TRANSISTOR SI4953DY
Q807	8-729-024-50	s	TRANSISTOR SI9936DY
Q808	8-729-040-75	s	TRANSISTOR SI4953DY
Q809	8-729-117-32	s	TRANSISTOR 2SC4177
Q810	8-729-140-63	s	TRANSISTOR 2SA1611-M5M6
Q811	8-729-117-32	s	TRANSISTOR 2SC4177
Q812	8-729-140-63	s	TRANSISTOR 2SA1611-M5M6
Q813	8-729-024-50	s	TRANSISTOR SI9936DY
Q1000	8-729-907-00	s	TRANSISTOR DTC114EU
Q1001	8-729-029-14	s	TRANSISTOR DTC144EUA-T106
Q1002	8-729-117-32	s	TRANSISTOR 2SC4177
Q1003	8-729-140-63	s	TRANSISTOR 2SA1611-M5M6
Q1004	8-729-117-32	s	TRANSISTOR 2SC4177
Q1005	8-729-140-63	s	TRANSISTOR 2SA1611-M5M6
Q1006	8-729-040-75	s	TRANSISTOR SI4953DY
Q1007	8-729-024-50	s	TRANSISTOR SI9936DY
Q1008	8-729-040-75	s	TRANSISTOR SI4953DY
Q1009	8-729-117-32	s	TRANSISTOR 2SC4177
Q1010	8-729-140-63	s	TRANSISTOR 2SA1611-M5M6
Q1011	8-729-117-32	s	TRANSISTOR 2SC4177
Q1012	8-729-140-63	s	TRANSISTOR 2SA1611-M5M6
Q1013	8-729-024-50	s	TRANSISTOR SI9936DY
R100	1-218-732-11	s	RESISTOR,CHIP 47K 1/16W(1608)
R101	1-218-732-11	s	RESISTOR,CHIP 47K 1/16W(1608)
R102	1-218-732-11	s	RESISTOR,CHIP 47K 1/16W(1608)
R103	1-218-708-11	s	RESISTOR,CHIP 4.7K 1/16W(1608)
R104	1-216-864-11	s	CONDUCTOR, CHIP (1608)
R105	1-216-864-11	s	CONDUCTOR, CHIP (1608)
R106	1-216-864-11	s	CONDUCTOR, CHIP (1608)
R107	1-216-864-11	s	CONDUCTOR, CHIP (1608)
R108	1-218-692-11	s	RESISTOR,CHIP 1.0K 1/16W(1608)
R109	1-218-740-11	s	RESISTOR,CHIP 100K 1/16W(1608)
R110	1-218-740-11	s	RESISTOR,CHIP 100K 1/16W(1608)
R111	1-218-700-11	s	RESISTOR,CHIP 2.2K 1/16W(1608)
R112	1-218-740-11	s	RESISTOR,CHIP 100K 1/16W(1608)
R113	1-218-708-11	s	RESISTOR,CHIP 4.7K 1/16W(1608)
R200	1-218-674-11	s	RESISTOR CHIP 180 1/16W (1608)
R201	1-218-726-11	s	RESISTOR CHIP 27K 1/16W (1608)
R202	1-218-740-11	s	RESISTOR,CHIP 100K 1/16W(1608)
R203	1-218-692-11	s	RESISTOR,CHIP 1.0K 1/16W(1608)
R204	1-218-692-11	s	RESISTOR,CHIP 1.0K 1/16W(1608)
R205	1-218-692-11	s	RESISTOR,CHIP 1.0K 1/16W(1608)
R206	1-218-692-11	s	RESISTOR,CHIP 1.0K 1/16W(1608)
R207	1-218-692-11	s	RESISTOR,CHIP 1.0K 1/16W(1608)
R208	1-218-692-11	s	RESISTOR,CHIP 1.0K 1/16W(1608)
R209	1-218-692-11	s	RESISTOR,CHIP 1.0K 1/16W(1608)
R210	1-218-668-11	s	RESISTOR,CHIP 100 1/16W (1608)
R211	1-218-674-11	s	RESISTOR CHIP 180 1/16W (1608)
R212	1-218-740-11	s	RESISTOR,CHIP 100K 1/16W(1608)
R213	1-218-740-11	s	RESISTOR,CHIP 100K 1/16W(1608)
R214	1-218-740-11	s	RESISTOR,CHIP 100K 1/16W(1608)
R215	1-218-740-11	s	RESISTOR,CHIP 100K 1/16W(1608)
R216	1-218-740-11	s	RESISTOR,CHIP 100K 1/16W(1608)

(DR-414 BOARD)

Ref. No. or Q'ty	Part No.	SP	Description
R217	1-218-740-11	s	RESISTOR,CHIP 100K 1/16W(1608)
R218	1-218-740-11	s	RESISTOR,CHIP 100K 1/16W(1608)
R219	1-218-740-11	s	RESISTOR,CHIP 100K 1/16W(1608)
R220	1-218-740-11	s	RESISTOR,CHIP 100K 1/16W(1608)
R221	1-218-740-11	s	RESISTOR,CHIP 100K 1/16W(1608)
R222	1-218-740-11	s	RESISTOR,CHIP 100K 1/16W(1608)
R223	1-218-740-11	s	RESISTOR,CHIP 100K 1/16W(1608)
R224	1-218-716-11	s	RESISTOR,CHIP 10K 1/16W(1608)
R225	1-218-740-11	s	RESISTOR,CHIP 100K 1/16W(1608)
R226	1-218-740-11	s	RESISTOR,CHIP 100K 1/16W(1608)
R227	1-218-740-11	s	RESISTOR,CHIP 100K 1/16W(1608)
R228	1-218-740-11	s	RESISTOR,CHIP 100K 1/16W(1608)
R229	1-218-740-11	s	RESISTOR,CHIP 100K 1/16W(1608)
R230	1-218-708-11	s	RESISTOR,CHIP 4.7K 1/16W(1608)
R231	1-218-716-11	s	RESISTOR,CHIP 10K 1/16W(1608)
R232	1-218-716-11	s	RESISTOR,CHIP 10K 1/16W(1608)
R236	1-218-740-11	s	RESISTOR,CHIP 100K 1/16W(1608)
R237	1-218-727-11	s	RESISTOR,CHIP 30K 1/16W(1608)
R238	1-218-706-11	s	RESISTOR,CHIP 3.9K 1/16W(1608)
R239	1-218-689-11	s	RESISTOR CHIP 750 1/16W (1608)
R240	1-218-674-11	s	RESISTOR CHIP 180 1/16W (1608)
R241	1-218-704-11	s	RESISTOR,CHIP 3.3K 1/16W(1608)
R300	1-218-692-11	s	RESISTOR,CHIP 1.0K 1/16W(1608)
R301	1-218-716-11	s	RESISTOR,CHIP 10K 1/16W(1608)
R302	1-218-692-11	s	RESISTOR,CHIP 1.0K 1/16W(1608)
R305	1-216-864-11	s	CONDUCTOR, CHIP (1608)
R306	1-218-724-11	s	RESISTOR,CHIP 22K 1/16W(1608)
R307	1-218-708-11	s	RESISTOR,CHIP 4.7K 1/16W(1608)
R308	1-218-734-11	s	RESISTOR,CHIP 56K 1/16W(1608)
R309	1-218-720-11	s	RESISTOR,CHIP 15K 1/16W(1608)
R310	1-218-724-11	s	RESISTOR,CHIP 22K 1/16W(1608)
R311	1-218-722-11	s	RESISTOR, CHIP 18K 1/16W 1608
R312	1-218-700-11	s	RESISTOR,CHIP 2.2K 1/16W(1608)
R313	1-218-734-11	s	RESISTOR,CHIP 56K 1/16W(1608)
R314	1-218-736-11	s	RESISTOR,CHIP 68K 1/16W(1608)
R315	1-218-708-11	s	RESISTOR,CHIP 4.7K 1/16W(1608)
R316	1-218-716-11	s	RESISTOR,CHIP 10K 1/16W(1608)
R317	1-218-700-11	s	RESISTOR,CHIP 2.2K 1/16W(1608)
R318	1-218-724-11	s	RESISTOR,CHIP 22K 1/16W(1608)
R319	1-218-716-11	s	RESISTOR,CHIP 10K 1/16W(1608)
R320	1-218-724-11	s	RESISTOR,CHIP 22K 1/16W(1608)
R321	1-218-728-11	s	RESISTOR,CHIP 33K 1/16W
R322	1-218-684-11	s	RESISTOR,CHIP 470 1/16W (1608)
R323	1-218-734-11	s	RESISTOR,CHIP 56K 1/16W(1608)
R324	1-218-716-11	s	RESISTOR,CHIP 10K 1/16W(1608)
R325	1-218-734-11	s	RESISTOR,CHIP 56K 1/16W(1608)
R326	1-218-748-11	s	RESISTOR,CHIP 220K 1/16W(1608)
R327	1-218-736-11	s	RESISTOR,CHIP 68K 1/16W(1608)
R328	1-218-724-11	s	RESISTOR,CHIP 22K 1/16W(1608)
R329	1-218-734-11	s	RESISTOR,CHIP 56K 1/16W(1608)
R330	1-218-716-11	s	RESISTOR,CHIP 10K 1/16W(1608)
R331	1-218-716-11	s	RESISTOR,CHIP 10K 1/16W(1608)
R332	1-218-732-11	s	RESISTOR,CHIP 47K 1/16W(1608)
R334	1-218-700-11	s	RESISTOR,CHIP 2.2K 1/16W(1608)
R335	1-218-700-11	s	RESISTOR,CHIP 2.2K 1/16W(1608)
R336	1-218-700-11	s	RESISTOR,CHIP 2.2K 1/16W(1608)
R337	1-218-724-11	s	RESISTOR,CHIP 22K 1/16W(1608)
R338	1-218-710-11	s	RESISTOR,CHIP 5.6K 1/16W(1608)
R339	1-218-732-11	s	RESISTOR,CHIP 47K 1/16W(1608)

(DR-414 BOARD)

Ref. No. or Q'ty	Part No.	SP	Description
R340	1-218-710-11	s	RESISTOR,CHIP 5.6K 1/16W(1608)
R341	1-218-700-11	s	RESISTOR,CHIP 2.2K 1/16W(1608)
R342	1-218-700-11	s	RESISTOR,CHIP 2.2K 1/16W(1608)
R343	1-218-700-11	s	RESISTOR,CHIP 2.2K 1/16W(1608)
R344	1-218-692-11	s	RESISTOR,CHIP 1.0K 1/16W(1608)
R345	1-218-692-11	s	RESISTOR,CHIP 1.0K 1/16W(1608)
R346	1-218-720-11	s	RESISTOR,CHIP 15K 1/16W(1608)
R347	1-218-720-11	s	RESISTOR,CHIP 15K 1/16W(1608)
R348	1-218-722-11	s	RESISTOR, CHIP 18K 1/16W 1608
R349	1-218-722-11	s	RESISTOR, CHIP 18K 1/16W 1608
R350	1-218-728-11	s	RESISTOR,CHIP 33K 1/16W
R351	1-218-740-11	s	RESISTOR,CHIP 100K 1/16W(1608)
R352	1-218-917-11	s	RESISTOR,CHIP 820K 1/16W(1608)
R353	1-218-750-11	s	RESISTOR,CHIP 270K 1/16W(1608)
R354	1-218-724-11	s	RESISTOR,CHIP 22K 1/16W(1608)
R355	1-218-700-11	s	RESISTOR,CHIP 2.2K 1/16W(1608)
R356	1-218-708-11	s	RESISTOR,CHIP 4.7K 1/16W(1608)
R357	1-218-732-11	s	RESISTOR,CHIP 47K 1/16W(1608)
R358	1-218-700-11	s	RESISTOR,CHIP 2.2K 1/16W(1608)
R359	1-218-700-11	s	RESISTOR,CHIP 2.2K 1/16W(1608)
R360	1-218-700-11	s	RESISTOR,CHIP 2.2K 1/16W(1608)
R362	1-218-716-11	s	RESISTOR,CHIP 10K 1/16W(1608)
R365	1-218-752-11	s	RESISTOR,CHIP 330K 1/16W(1608)
R366	1-218-740-11	s	RESISTOR,CHIP 100K 1/16W(1608)
R367	1-219-685-11	s	RES, CHIP (SQUARE TYPE) 0.05
R368	1-218-726-11	s	RESISTOR CHIP 27K 1/16W (1608)
R369	1-219-989-11	s	RESISTOR, SQUARE CHIP 0.02 1W
R400	1-218-716-11	s	RESISTOR,CHIP 10K 1/16W(1608)
R401	1-218-724-11	s	RESISTOR,CHIP 22K 1/16W(1608)
R402	1-218-744-11	s	RESISTOR,CHIP 150K 1/16W
R403	1-218-716-11	s	RESISTOR,CHIP 10K 1/16W(1608)
R405	1-218-716-11	s	RESISTOR,CHIP 10K 1/16W(1608)
R407	1-218-724-11	s	RESISTOR,CHIP 22K 1/16W(1608)
R408	1-218-720-11	s	RESISTOR,CHIP 15K 1/16W(1608)
R409	1-218-724-11	s	RESISTOR,CHIP 22K 1/16W(1608)
R410	1-218-702-11	s	RESISTOR CHIP 2.7K 1/16W(1608)
R411	1-218-708-11	s	RESISTOR,CHIP 4.7K 1/16W(1608)
R412	1-218-684-11	s	RESISTOR,CHIP 470 1/16W (1608)
R413	1-218-724-11	s	RESISTOR,CHIP 22K 1/16W(1608)
R415	1-218-724-11	s	RESISTOR,CHIP 22K 1/16W(1608)
R416	1-218-720-11	s	RESISTOR,CHIP 15K 1/16W(1608)
R417	1-218-720-11	s	RESISTOR,CHIP 15K 1/16W(1608)
R418	1-219-706-11	s	RESISTOR, CHIP 0.10/1W
R419	1-218-748-11	s	RESISTOR,CHIP 220K 1/16W(1608)
R420	1-218-736-11	s	RESISTOR,CHIP 68K 1/16W(1608)
R422	1-218-752-11	s	RESISTOR,CHIP 330K 1/16W(1608)
R423	1-218-708-11	s	RESISTOR,CHIP 4.7K 1/16W(1608)
R424	1-218-724-11	s	RESISTOR,CHIP 22K 1/16W(1608)
R425	1-218-752-11	s	RESISTOR,CHIP 330K 1/16W(1608)
R426	1-218-726-11	s	RESISTOR CHIP 27K 1/16W (1608)
R427	1-218-724-11	s	RESISTOR,CHIP 22K 1/16W(1608)
R428	1-218-734-11	s	RESISTOR,CHIP 56K 1/16W(1608)
R429	1-218-692-11	s	RESISTOR,CHIP 1.0K 1/16W(1608)
R500	1-218-716-11	s	RESISTOR,CHIP 10K 1/16W(1608)
R501	1-218-716-11	s	RESISTOR,CHIP 10K 1/16W(1608)
R502	1-218-700-11	s	RESISTOR,CHIP 2.2K 1/16W(1608)
R503	1-218-700-11	s	RESISTOR,CHIP 2.2K 1/16W(1608)
R504	1-218-716-11	s	RESISTOR,CHIP 10K 1/16W(1608)
R505	1-218-716-11	s	RESISTOR,CHIP 10K 1/16W(1608)

(DR-414 BOARD)

Ref. No. or Q'ty	Part No.	SP	Description
R506	1-218-716-11	s	RESISTOR,CHIP 10K 1/16W(1608)
R507	1-218-716-11	s	RESISTOR,CHIP 10K 1/16W(1608)
R508	1-218-716-11	s	RESISTOR,CHIP 10K 1/16W(1608)
R509	1-218-716-11	s	RESISTOR,CHIP 10K 1/16W(1608)
R510	1-218-716-11	s	RESISTOR,CHIP 10K 1/16W(1608)
R511	1-218-716-11	s	RESISTOR,CHIP 10K 1/16W(1608)
R512	1-218-724-11	s	RESISTOR,CHIP 22K 1/16W(1608)
R513	1-218-716-11	s	RESISTOR,CHIP 10K 1/16W(1608)
R514	1-218-724-11	s	RESISTOR,CHIP 22K 1/16W(1608)
R515	1-218-748-11	s	RESISTOR,CHIP 220K 1/16W(1608)
R516	1-218-748-11	s	RESISTOR,CHIP 220K 1/16W(1608)
R517	1-218-716-11	s	RESISTOR,CHIP 10K 1/16W(1608)
R518	1-218-724-11	s	RESISTOR,CHIP 22K 1/16W(1608)
R519	1-218-748-11	s	RESISTOR,CHIP 220K 1/16W(1608)
R520	1-218-748-11	s	RESISTOR,CHIP 220K 1/16W(1608)
R521	1-218-724-11	s	RESISTOR,CHIP 22K 1/16W(1608)
R522	1-218-716-11	s	RESISTOR,CHIP 10K 1/16W(1608)
R523	1-218-716-11	s	RESISTOR,CHIP 10K 1/16W(1608)
R524	1-218-716-11	s	RESISTOR,CHIP 10K 1/16W(1608)
R525	1-218-716-11	s	RESISTOR,CHIP 10K 1/16W(1608)
R526	1-218-702-11	s	RESISTOR CHIP 2.7K 1/16W(1608)
R527	1-218-716-11	s	RESISTOR,CHIP 10K 1/16W(1608)
R528	1-218-716-11	s	RESISTOR,CHIP 10K 1/16W(1608)
R529	1-219-706-11	s	RESISTOR, CHIP 0.10/1W
R530	1-219-706-11	s	RESISTOR, CHIP 0.10/1W
R531	1-219-706-11	s	RESISTOR, CHIP 0.10/1W
R532	1-218-716-11	s	RESISTOR,CHIP 10K 1/16W(1608)
R534	1-218-676-11	s	RESISTOR,CHIP 220 1/16W(1608)
R535	1-218-748-11	s	RESISTOR,CHIP 220K 1/16W(1608)
R536	1-218-736-11	s	RESISTOR,CHIP 68K 1/16W(1608)
R537	1-218-748-11	s	RESISTOR,CHIP 220K 1/16W(1608)
R538	1-218-736-11	s	RESISTOR,CHIP 68K 1/16W(1608)
R539	1-218-748-11	s	RESISTOR,CHIP 220K 1/16W(1608)
R540	1-218-736-11	s	RESISTOR,CHIP 68K 1/16W(1608)
R541	1-218-748-11	s	RESISTOR,CHIP 220K 1/16W(1608)
R542	1-218-736-11	s	RESISTOR,CHIP 68K 1/16W(1608)
R543	1-218-748-11	s	RESISTOR,CHIP 220K 1/16W(1608)
R544	1-218-736-11	s	RESISTOR,CHIP 68K 1/16W(1608)
R545	1-218-748-11	s	RESISTOR,CHIP 220K 1/16W(1608)
R546	1-218-736-11	s	RESISTOR,CHIP 68K 1/16W(1608)
R547	1-218-732-11	s	RESISTOR,CHIP 47K 1/16W(1608)
R548	1-218-732-11	s	RESISTOR,CHIP 47K 1/16W(1608)
R549	1-218-732-11	s	RESISTOR,CHIP 47K 1/16W(1608)
R550	1-218-732-11	s	RESISTOR,CHIP 47K 1/16W(1608)
R551	1-218-732-11	s	RESISTOR,CHIP 47K 1/16W(1608)
R552	1-218-732-11	s	RESISTOR,CHIP 47K 1/16W(1608)
R553	1-218-732-11	s	RESISTOR,CHIP 47K 1/16W(1608)
R554	1-218-732-11	s	RESISTOR,CHIP 47K 1/16W(1608)
R555	1-218-748-11	s	RESISTOR,CHIP 220K 1/16W(1608)
R556	1-218-736-11	s	RESISTOR,CHIP 68K 1/16W(1608)
R557	1-218-748-11	s	RESISTOR,CHIP 220K 1/16W(1608)
R558	1-218-736-11	s	RESISTOR,CHIP 68K 1/16W(1608)
R559	1-218-748-11	s	RESISTOR,CHIP 220K 1/16W(1608)
R560	1-218-736-11	s	RESISTOR,CHIP 68K 1/16W(1608)
R561	1-218-748-11	s	RESISTOR,CHIP 220K 1/16W(1608)
R562	1-218-736-11	s	RESISTOR,CHIP 68K 1/16W(1608)
R563	1-218-748-11	s	RESISTOR,CHIP 220K 1/16W(1608)
R564	1-218-736-11	s	RESISTOR,CHIP 68K 1/16W(1608)
R565	1-218-748-11	s	RESISTOR,CHIP 220K 1/16W(1608)

(DR-414 BOARD)

Ref. No. or Q'ty	Part No.	SP	Description
R566	1-218-736-11	s	RESISTOR,CHIP 68K 1/16W(1608)
R567	1-218-748-11	s	RESISTOR,CHIP 220K 1/16W(1608)
R568	1-218-736-11	s	RESISTOR,CHIP 68K 1/16W(1608)
R569	1-218-748-11	s	RESISTOR,CHIP 220K 1/16W(1608)
R570	1-218-736-11	s	RESISTOR,CHIP 68K 1/16W(1608)
R571	1-218-708-11	s	RESISTOR,CHIP 4.7K 1/16W(1608)
R600	1-218-740-11	s	RESISTOR,CHIP 100K 1/16W(1608)
R601	1-218-740-11	s	RESISTOR,CHIP 100K 1/16W(1608)
R602	1-218-700-11	s	RESISTOR,CHIP 2.2K 1/16W(1608)
R603	1-218-732-11	s	RESISTOR,CHIP 47K 1/16W(1608)
R604	1-218-732-11	s	RESISTOR,CHIP 47K 1/16W(1608)
R605	1-218-732-11	s	RESISTOR,CHIP 47K 1/16W(1608)
R606	1-218-732-11	s	RESISTOR,CHIP 47K 1/16W(1608)
R607	1-218-732-11	s	RESISTOR,CHIP 47K 1/16W(1608)
R608	1-218-726-11	s	RESISTOR CHIP 27K 1/16W (1608)
R609	1-218-726-11	s	RESISTOR CHIP 27K 1/16W (1608)
R610	1-218-708-11	s	RESISTOR,CHIP 4.7K 1/16W(1608)
R611	1-218-708-11	s	RESISTOR,CHIP 4.7K 1/16W(1608)
R612	1-218-732-11	s	RESISTOR,CHIP 47K 1/16W(1608)
R613	1-218-687-11	s	RESISTOR CHIP 620 1/16W (1608)
R614	1-218-698-11	s	RESISTOR,CHIP 1.8K 1/16W(1608)
R615	1-218-716-11	s	RESISTOR,CHIP 10K 1/16W(1608)
R616	1-218-728-11	s	RESISTOR,CHIP 33K 1/16W
R617	1-218-736-11	s	RESISTOR,CHIP 68K 1/16W(1608)
R620	1-218-740-11	s	RESISTOR,CHIP 100K 1/16W(1608)
R621	1-218-748-11	s	RESISTOR,CHIP 220K 1/16W(1608)
R622	1-218-704-11	s	RESISTOR,CHIP 3.3K 1/16W(1608)
R623	1-218-714-11	s	RESISTOR,CHIP 8.2K 1/16W(1608)
R624	1-218-704-11	s	RESISTOR,CHIP 3.3K 1/16W(1608)
R627	1-218-740-11	s	RESISTOR,CHIP 100K 1/16W(1608)
R629	1-218-716-11	s	RESISTOR,CHIP 10K 1/16W(1608)
R630	1-218-716-11	s	RESISTOR,CHIP 10K 1/16W(1608)
R631	1-218-716-11	s	RESISTOR,CHIP 10K 1/16W(1608)
R632	1-218-704-11	s	RESISTOR,CHIP 3.3K 1/16W(1608)
R635	1-218-714-11	s	RESISTOR,CHIP 8.2K 1/16W(1608)
R636	1-216-853-11	s	RESISTOR,CHIP 470K 1/16W(1608)
R637	1-218-726-11	s	RESISTOR CHIP 27K 1/16W (1608)
R638	1-218-726-11	s	RESISTOR CHIP 27K 1/16W (1608)
R639	1-218-917-11	s	RESISTOR,CHIP 820K 1/16W(1608)
R640	1-218-706-11	s	RESISTOR,CHIP 3.9K 1/16W(1608)
R700	1-218-698-11	s	RESISTOR,CHIP 1.8K 1/16W(1608)
R701	1-216-853-11	s	RESISTOR,CHIP 470K 1/16W(1608)
R702	1-216-853-11	s	RESISTOR,CHIP 470K 1/16W(1608)
R703	1-216-854-11	s	RESISTOR, CHIP 560K 1/16W 1608
R704	1-218-732-11	s	RESISTOR,CHIP 47K 1/16W(1608)
R705	1-218-708-11	s	RESISTOR,CHIP 4.7K 1/16W(1608)
R706	1-218-716-11	s	RESISTOR,CHIP 10K 1/16W(1608)
R707	1-218-708-11	s	RESISTOR,CHIP 4.7K 1/16W(1608)
R708	1-218-732-11	s	RESISTOR,CHIP 47K 1/16W(1608)
R709	1-218-734-11	s	RESISTOR,CHIP 56K 1/16W(1608)
R710	1-218-724-11	s	RESISTOR,CHIP 22K 1/16W(1608)
R711	1-218-724-11	s	RESISTOR,CHIP 22K 1/16W(1608)
R712	1-218-720-11	s	RESISTOR,CHIP 15K 1/16W(1608)
R713	1-218-728-11	s	RESISTOR,CHIP 33K 1/16W
R714	1-218-716-11	s	RESISTOR,CHIP 10K 1/16W(1608)
R715	1-218-716-11	s	RESISTOR,CHIP 10K 1/16W(1608)
R716	1-218-724-11	s	RESISTOR,CHIP 22K 1/16W(1608)
R717	1-218-702-11	s	RESISTOR CHIP 2.7K 1/16W(1608)
R718	1-218-716-11	s	RESISTOR,CHIP 10K 1/16W(1608)

(DR-414 BOARD)

Ref. No. or Q'ty	Part No.	SP	Description
R719	1-218-716-11	s	RESISTOR,CHIP 10K 1/16W(1608)
R720	1-218-716-11	s	RESISTOR,CHIP 10K 1/16W(1608)
R721	1-218-724-11	s	RESISTOR,CHIP 22K 1/16W(1608)
R723	1-218-684-11	s	RESISTOR,CHIP 470 1/16W (1608)
R724	1-219-706-11	s	RESISTOR, CHIP 0.10/1W
R725	1-218-748-11	s	RESISTOR,CHIP 220K 1/16W(1608)
R726	1-218-736-11	s	RESISTOR,CHIP 68K 1/16W(1608)
R727	1-218-724-11	s	RESISTOR,CHIP 22K 1/16W(1608)
R728	1-218-732-11	s	RESISTOR,CHIP 47K 1/16W(1608)
R729	1-218-728-11	s	RESISTOR,CHIP 33K 1/16W
R730	1-218-732-11	s	RESISTOR,CHIP 47K 1/16W(1608)
R731	1-218-708-11	s	RESISTOR,CHIP 4.7K 1/16W(1608)
R732	1-218-708-11	s	RESISTOR,CHIP 4.7K 1/16W(1608)
R733	1-218-708-11	s	RESISTOR,CHIP 4.7K 1/16W(1608)
R734	1-218-708-11	s	RESISTOR,CHIP 4.7K 1/16W(1608)
R735	1-218-704-11	s	RESISTOR,CHIP 3.3K 1/16W(1608)
R736	1-218-704-11	s	RESISTOR,CHIP 3.3K 1/16W(1608)
R737	1-218-716-11	s	RESISTOR,CHIP 10K 1/16W(1608)
R738	1-218-713-11	s	RESISTOR,METAL 7.5K 1/16W
R739	1-218-748-11	s	RESISTOR,CHIP 220K 1/16W(1608)
R740	1-218-748-11	s	RESISTOR,CHIP 220K 1/16W(1608)
R742	1-218-730-11	s	RESISTOR METAL FILM CHIP 39K
R744	1-218-720-11	s	RESISTOR,CHIP 15K 1/16W(1608)
R745	1-218-728-11	s	RESISTOR,CHIP 33K 1/16W
R746	1-216-864-11	s	CONDUCTOR, CHIP (1608)
R752	1-218-700-11	s	RESISTOR,CHIP 2.2K 1/16W(1608)
R753	1-218-700-11	s	RESISTOR,CHIP 2.2K 1/16W(1608)
R756	1-218-716-11	s	RESISTOR,CHIP 10K 1/16W(1608)
R757	1-218-716-11	s	RESISTOR,CHIP 10K 1/16W(1608)
R759	1-218-668-11	s	RESISTOR,CHIP 100 1/16W (1608)
R760	1-218-668-11	s	RESISTOR,CHIP 100 1/16W (1608)
R763	1-218-716-11	s	RESISTOR,CHIP 10K 1/16W(1608)
R766	1-218-728-11	s	RESISTOR,CHIP 33K 1/16W
R768	1-218-692-11	s	RESISTOR,CHIP 1.0K 1/16W(1608)
R769	1-218-692-11	s	RESISTOR,CHIP 1.0K 1/16W(1608)
R770	1-218-692-11	s	RESISTOR,CHIP 1.0K 1/16W(1608)
R771	1-218-676-11	s	RESISTOR,CHIP 220 1/16W(1608)
R772	1-218-676-11	s	RESISTOR,CHIP 220 1/16W(1608)
R773	1-218-668-11	s	RESISTOR,CHIP 100 1/16W (1608)
R774	1-218-668-11	s	RESISTOR,CHIP 100 1/16W (1608)
R775	1-218-817-11	s	RESISTOR CHIP 3.3 1/2W (4532)
R776	1-218-817-11	s	RESISTOR CHIP 3.3 1/2W (4532)
R777	1-218-614-11	s	RESISTOR CHIP 10/1W (5331)
R778	1-219-724-11	s	RESISTOR,METAL FILM (SMD) 1.0
R779	1-218-752-11	s	RESISTOR,CHIP 330K 1/16W(1608)
R780	1-218-708-11	s	RESISTOR,CHIP 4.7K 1/16W(1608)
R782	1-219-706-11	s	RESISTOR, CHIP 0.10/1W
R800	1-218-716-11	s	RESISTOR,CHIP 10K 1/16W(1608)
R801	1-218-724-11	s	RESISTOR,CHIP 22K 1/16W(1608)
R803	1-218-732-11	s	RESISTOR,CHIP 47K 1/16W(1608)
R804	1-218-732-11	s	RESISTOR,CHIP 47K 1/16W(1608)
R806	1-218-732-11	s	RESISTOR,CHIP 47K 1/16W(1608)
R808	1-218-732-11	s	RESISTOR,CHIP 47K 1/16W(1608)
R809	1-218-732-11	s	RESISTOR,CHIP 47K 1/16W(1608)
R810	1-218-708-11	s	RESISTOR,CHIP 4.7K 1/16W(1608)
R811	1-218-708-11	s	RESISTOR,CHIP 4.7K 1/16W(1608)
R812	1-218-732-11	s	RESISTOR,CHIP 47K 1/16W(1608)
R813	1-218-702-11	s	RESISTOR CHIP 2.7K 1/16W(1608)
R814	1-218-750-11	s	RESISTOR,CHIP 270K 1/16W(1608)

(DR-414 BOARD)

Ref. No. or Q'ty	Part No.	SP	Description
R815	1-218-707-11	s	RESISTOR,CHIP 4.3K 1/16W(1608)
R816	1-218-688-11	s	RESISTOR,CHIP 680 1/16W(1608)
R817	1-218-708-11	s	RESISTOR,CHIP 4.7K 1/16W(1608)
R818	1-218-732-11	s	RESISTOR,CHIP 47K 1/16W(1608)
R819	1-218-708-11	s	RESISTOR,CHIP 4.7K 1/16W(1608)
R820	1-218-708-11	s	RESISTOR,CHIP 4.7K 1/16W(1608)
R821	1-218-708-11	s	RESISTOR,CHIP 4.7K 1/16W(1608)
R822	1-218-708-11	s	RESISTOR,CHIP 4.7K 1/16W(1608)
R823	1-218-644-11	s	RESISTOR,CHIP 10 1/16W
R824	1-218-716-11	s	RESISTOR,CHIP 10K 1/16W(1608)
R825	1-216-659-11	s	RESISTOR,CHIP 2.2K 1/10W(2012)
R826	1-216-659-11	s	RESISTOR,CHIP 2.2K 1/10W(2012)
R829	1-218-744-11	s	RESISTOR,CHIP 150K 1/16W
R830	1-218-726-11	s	RESISTOR CHIP 27K 1/16W (1608)
R831	1-218-742-11	s	RESISTOR,METAL 120K 1/16
R832	1-218-708-11	s	RESISTOR,CHIP 4.7K 1/16W(1608)
R833	1-218-708-11	s	RESISTOR,CHIP 4.7K 1/16W(1608)
R834	1-216-659-11	s	RESISTOR,CHIP 2.2K 1/10W(2012)
R835	1-216-659-11	s	RESISTOR,CHIP 2.2K 1/10W(2012)
R836	1-218-742-11	s	RESISTOR,METAL 120K 1/16
R837	1-218-728-11	s	RESISTOR,CHIP 33K 1/16W
R838	1-218-728-11	s	RESISTOR,CHIP 33K 1/16W
R839	1-219-706-11	s	RESISTOR, CHIP 0.10/1W
R840	1-218-748-11	s	RESISTOR,CHIP 220K 1/16W(1608)
R841	1-218-736-11	s	RESISTOR,CHIP 68K 1/16W(1608)
R842	1-218-748-11	s	RESISTOR,CHIP 220K 1/16W(1608)
R843	1-218-736-11	s	RESISTOR,CHIP 68K 1/16W(1608)
R845	1-218-708-11	s	RESISTOR,CHIP 4.7K 1/16W(1608)
R848	1-218-708-11	s	RESISTOR,CHIP 4.7K 1/16W(1608)
R849	1-218-676-11	s	RESISTOR,CHIP 220 1/16W(1608)
R850	1-218-708-11	s	RESISTOR,CHIP 4.7K 1/16W(1608)
R851	1-218-708-11	s	RESISTOR,CHIP 4.7K 1/16W(1608)
R888	1-218-734-11	s	RESISTOR,CHIP 56K 1/16W(1608)
R889	1-218-686-11	s	RESISTOR CHIP 560 1/16W (1608)
R890	1-218-686-11	s	RESISTOR CHIP 560 1/16W (1608)
R891	1-218-686-11	s	RESISTOR CHIP 560 1/16W (1608)
R892	1-218-686-11	s	RESISTOR CHIP 560 1/16W (1608)
R893	1-218-708-11	s	RESISTOR,CHIP 4.7K 1/16W(1608)
R894	1-218-708-11	s	RESISTOR,CHIP 4.7K 1/16W(1608)
R900	1-218-716-11	s	RESISTOR,CHIP 10K 1/16W(1608)
R901	1-218-700-11	s	RESISTOR,CHIP 2.2K 1/16W(1608)
R902	1-218-734-11	s	RESISTOR,CHIP 56K 1/16W(1608)
R903	1-218-724-11	s	RESISTOR,CHIP 22K 1/16W(1608)
R904	1-218-724-11	s	RESISTOR,CHIP 22K 1/16W(1608)
R905	1-218-720-11	s	RESISTOR,CHIP 15K 1/16W(1608)
R906	1-218-752-11	s	RESISTOR,CHIP 330K 1/16W(1608)
R907	1-218-708-11	s	RESISTOR,CHIP 4.7K 1/16W(1608)
R908	1-218-702-11	s	RESISTOR CHIP 2.7K 1/16W(1608)
R909	1-218-716-11	s	RESISTOR,CHIP 10K 1/16W(1608)
R911	1-218-684-11	s	RESISTOR,CHIP 470 1/16W (1608)
R912	1-219-706-11	s	RESISTOR, CHIP 0.10/1W
R913	1-219-706-11	s	RESISTOR, CHIP 0.10/1W
R915	1-218-736-11	s	RESISTOR,CHIP 68K 1/16W(1608)
R916	1-216-853-11	s	RESISTOR,CHIP 470K 1/16W(1608)
R917	1-216-853-11	s	RESISTOR,CHIP 470K 1/16W(1608)
R918	1-216-854-11	s	RESISTOR, CHIP 560K 1/16W 1608
R919	1-218-708-11	s	RESISTOR,CHIP 4.7K 1/16W(1608)
R920	1-218-732-11	s	RESISTOR,CHIP 47K 1/16W(1608)
R921	1-218-728-11	s	RESISTOR,CHIP 33K 1/16W

(DR-414 BOARD)

Ref. No. or Q'ty	Part No.	SP	Description
R922	1-218-716-11	s	RESISTOR,CHIP 10K 1/16W(1608)
R923	1-218-716-11	s	RESISTOR,CHIP 10K 1/16W(1608)
R924	1-218-728-11	s	RESISTOR,CHIP 33K 1/16W
R925	1-218-724-11	s	RESISTOR,CHIP 22K 1/16W(1608)
R926	1-218-716-11	s	RESISTOR,CHIP 10K 1/16W(1608)
R927	1-218-716-11	s	RESISTOR,CHIP 10K 1/16W(1608)
R928	1-218-724-11	s	RESISTOR,CHIP 22K 1/16W(1608)
R1000	1-218-716-11	s	RESISTOR,CHIP 10K 1/16W(1608)
R1001	1-218-724-11	s	RESISTOR,CHIP 22K 1/16W(1608)
R1003	1-218-732-11	s	RESISTOR,CHIP 47K 1/16W(1608)
R1004	1-218-732-11	s	RESISTOR,CHIP 47K 1/16W(1608)
R1006	1-218-732-11	s	RESISTOR,CHIP 47K 1/16W(1608)
R1008	1-218-732-11	s	RESISTOR,CHIP 47K 1/16W(1608)
R1009	1-218-732-11	s	RESISTOR,CHIP 47K 1/16W(1608)
R1010	1-218-708-11	s	RESISTOR,CHIP 4.7K 1/16W(1608)
R1011	1-218-708-11	s	RESISTOR,CHIP 4.7K 1/16W(1608)
R1012	1-218-732-11	s	RESISTOR,CHIP 47K 1/16W(1608)
R1013	1-218-702-11	s	RESISTOR CHIP 2.7K 1/16W(1608)
R1014	1-218-750-11	s	RESISTOR,CHIP 270K 1/16W(1608)
R1015	1-218-707-11	s	RESISTOR,CHIP 4.3K 1/16W(1608)
R1016	1-218-688-11	s	RESISTOR,CHIP 680 1/16W(1608)
R1017	1-218-708-11	s	RESISTOR,CHIP 4.7K 1/16W(1608)
R1018	1-218-732-11	s	RESISTOR,CHIP 47K 1/16W(1608)
R1019	1-218-708-11	s	RESISTOR,CHIP 4.7K 1/16W(1608)
R1020	1-218-708-11	s	RESISTOR,CHIP 4.7K 1/16W(1608)
R1021	1-218-708-11	s	RESISTOR,CHIP 4.7K 1/16W(1608)
R1022	1-218-708-11	s	RESISTOR,CHIP 4.7K 1/16W(1608)
R1023	1-218-644-11	s	RESISTOR,CHIP 10 1/16W
R1024	1-218-716-11	s	RESISTOR,CHIP 10K 1/16W(1608)
R1025	1-216-659-11	s	RESISTOR,CHIP 2.2K 1/10W(2012)
R1026	1-216-659-11	s	RESISTOR,CHIP 2.2K 1/10W(2012)
R1027	1-218-744-11	s	RESISTOR,CHIP 150K 1/16W
R1030	1-218-726-11	s	RESISTOR CHIP 27K 1/16W (1608)
R1031	1-218-742-11	s	RESISTOR,METAL 120K 1/16
R1032	1-218-708-11	s	RESISTOR,CHIP 4.7K 1/16W(1608)
R1033	1-218-708-11	s	RESISTOR,CHIP 4.7K 1/16W(1608)
R1034	1-216-659-11	s	RESISTOR,CHIP 2.2K 1/10W(2012)
R1035	1-216-659-11	s	RESISTOR,CHIP 2.2K 1/10W(2012)
R1036	1-218-742-11	s	RESISTOR,METAL 120K 1/16
R1037	1-218-728-11	s	RESISTOR,CHIP 33K 1/16W
R1038	1-218-728-11	s	RESISTOR,CHIP 33K 1/16W
R1039	1-219-706-11	s	RESISTOR, CHIP 0.10/1W
R1040	1-218-748-11	s	RESISTOR,CHIP 220K 1/16W(1608)
R1041	1-218-736-11	s	RESISTOR,CHIP 68K 1/16W(1608)
R1042	1-218-748-11	s	RESISTOR,CHIP 220K 1/16W(1608)
R1043	1-218-736-11	s	RESISTOR,CHIP 68K 1/16W(1608)
R1045	1-218-708-11	s	RESISTOR,CHIP 4.7K 1/16W(1608)
R1048	1-218-708-11	s	RESISTOR,CHIP 4.7K 1/16W(1608)
R1049	1-218-676-11	s	RESISTOR,CHIP 220 1/16W(1608)
R1050	1-218-708-11	s	RESISTOR,CHIP 4.7K 1/16W(1608)
R1051	1-218-708-11	s	RESISTOR,CHIP 4.7K 1/16W(1608)
R1089	1-218-686-11	s	RESISTOR CHIP 560 1/16W (1608)
R1090	1-218-686-11	s	RESISTOR CHIP 560 1/16W (1608)
R1091	1-218-686-11	s	RESISTOR CHIP 560 1/16W (1608)
R1092	1-218-686-11	s	RESISTOR CHIP 560 1/16W (1608)
R1093	1-218-708-11	s	RESISTOR,CHIP 4.7K 1/16W(1608)
R1094	1-218-708-11	s	RESISTOR,CHIP 4.7K 1/16W(1608)
RB101	1-239-430-11	s	NETWORK RESISTOR 4.7K (1608)

(DR-414 BOARD)

Ref. No. or Q'ty	Part No.	SP	Description
RB102	1-236-907-11	s	RESISTOR BLOCK 100K (1608)
RB200	1-236-908-11	s	RESISTOR,NETWORK 10K (3216)
RB201	1-236-908-11	s	RESISTOR,NETWORK 10K (3216)
RB202	1-236-908-11	s	RESISTOR,NETWORK 10K (3216)
RB203	1-236-908-11	s	RESISTOR,NETWORK 10K (3216)
RB204	1-236-908-11	s	RESISTOR,NETWORK 10K (3216)
RB205	1-236-908-11	s	RESISTOR,NETWORK 10K (3216)
RB206	1-236-908-11	s	RESISTOR,NETWORK 10K (3216)
RB207	1-236-908-11	s	RESISTOR,NETWORK 10K (3216)
RB208	1-239-428-11	s	NETWORK RESISTOR 3.3K (1608)
X100	1-760-465-11	s	VIBRATOR, CRYSTAL

DR-508 BOARD

[Lot No. 431 -] HDW-2000, M2000/P, M2100/P, A2100
[Lot No. 4C2 -] HDW-D2000
[Lot No. 462 -] HDW-S2000/P
[Lot No. 434 -] DVW-2000/P, M2000/P
[Lot No. 431 -] MSW-2000, M2000/P, A2000/P, M2100/P
[Lot No. 495 -] MSW-M2000E/P, M2100E/P

Ref. No. or Q'ty	Part No.	SP	Description
1pc	A-8346-853-B	s	MOUNTED CIRCUIT BOARD, DR-508
3pcs	3-624-978-01	o	P HOLDER
3pcs	7-682-953-09	s	SCREW +PSW 3X20
C100	1-115-416-11	s	CAPACITOR,CERAMIC 1000PF/25V
C101	1-115-416-11	s	CAPACITOR,CERAMIC 1000PF/25V
C102	1-115-416-11	s	CAPACITOR,CERAMIC 1000PF/25V
C103	1-115-416-11	s	CAPACITOR,CERAMIC 1000PF/25V
C104	1-115-416-11	s	CAPACITOR,CERAMIC 1000PF/25V
C105	1-115-416-11	s	CAPACITOR,CERAMIC 1000PF/25V
C106	1-115-416-11	s	CAPACITOR,CERAMIC 1000PF/25V
C107	1-115-416-11	s	CAPACITOR,CERAMIC 1000PF/25V
C108	1-162-970-11	s	CAPACITOR CERAMIC 0.01MF/25V B
C109	1-115-416-11	s	CAPACITOR,CERAMIC 1000PF/25V
C110	1-162-916-11	s	CAPACITOR,CERAMIC 12PF/50V CH
C111	1-131-992-11	s	CAP, CERAMIC 100000PF F 1608
C112	1-162-916-11	s	CAPACITOR,CERAMIC 12PF/50V CH
C113	1-131-992-11	s	CAP, CERAMIC 100000PF F 1608
C114	1-131-992-11	s	CAP, CERAMIC 100000PF F 1608
C115	1-107-826-11	s	CAPACITOR,CHIP CERAMIC 0.1MF
C116	1-107-826-11	s	CAPACITOR,CHIP CERAMIC 0.1MF
C117	1-131-992-11	s	CAP, CERAMIC 100000PF F 1608
C118	1-107-826-11	s	CAPACITOR,CHIP CERAMIC 0.1MF
C119	1-107-826-11	s	CAPACITOR,CHIP CERAMIC 0.1MF
C120	1-107-826-11	s	CAPACITOR,CHIP CERAMIC 0.1MF
C121	1-131-992-11	s	CAP, CERAMIC 100000PF F 1608
C122	1-131-992-11	s	CAP, CERAMIC 100000PF F 1608
C200	1-131-992-11	s	CAP, CERAMIC 100000PF F 1608
C201	1-131-992-11	s	CAP, CERAMIC 100000PF F 1608
C202	1-131-992-11	s	CAP, CERAMIC 100000PF F 1608
C203	1-131-992-11	s	CAP, CERAMIC 100000PF F 1608
C204	1-131-992-11	s	CAP, CERAMIC 100000PF F 1608
C205	1-131-992-11	s	CAP, CERAMIC 100000PF F 1608
C206	1-131-992-11	s	CAP, CERAMIC 100000PF F 1608
C207	1-131-992-11	s	CAP, CERAMIC 100000PF F 1608
C208	1-131-992-11	s	CAP, CERAMIC 100000PF F 1608
C209	1-131-992-11	s	CAP, CERAMIC 100000PF F 1608
C210	1-131-992-11	s	CAP, CERAMIC 100000PF F 1608
C211	1-131-992-11	s	CAP, CERAMIC 100000PF F 1608
C212	1-131-992-11	s	CAP, CERAMIC 100000PF F 1608
C213	1-131-992-11	s	CAP, CERAMIC 100000PF F 1608
C214	1-131-992-11	s	CAP, CERAMIC 100000PF F 1608
C215	1-131-992-11	s	CAP, CERAMIC 100000PF F 1608
C216	1-131-992-11	s	CAP, CERAMIC 100000PF F 1608
C217	1-131-992-11	s	CAP, CERAMIC 100000PF F 1608
C218	1-131-992-11	s	CAP, CERAMIC 100000PF F 1608
C219	1-131-992-11	s	CAP, CERAMIC 100000PF F 1608
C300	1-131-992-11	s	CAP, CERAMIC 100000PF F 1608
C301	1-131-992-11	s	CAP, CERAMIC 100000PF F 1608
C302	1-162-970-11	s	CAPACITOR CERAMIC 0.01MF/25V B
C304	1-162-965-11	s	CAPACITOR,CERAMIC 1500PF/50V B
C305	1-162-966-11	s	CAPACITOR,CERAMIC 2200PF/50V B
C308	1-164-227-11	s	CAPACITOR,CERAMIC 0.022MF/25V
C310	1-107-420-11	s	CAPACITOR,ELECT 47MF/35V(105C)
C312	1-131-992-11	s	CAP, CERAMIC 100000PF F 1608

(DR-508 BOARD)

Ref. No. or Q'ty	Part No.	SP	Description
C313	1-131-992-11	s	CAP, CERAMIC 100000PF F 1608
C314	1-162-966-11	s	CAPACITOR,CERAMIC 2200PF/50V B
C315	1-131-992-11	s	CAP, CERAMIC 100000PF F 1608
C316	1-107-420-11	s	CAPACITOR,ELECT 47MF/35V(105C)
C317	1-162-966-11	s	CAPACITOR,CERAMIC 2200PF/50V B
C318	1-107-826-11	s	CAPACITOR,CHIP CERAMIC 0.1MF
C319	1-162-966-11	s	CAPACITOR,CERAMIC 2200PF/50V B
C320	1-107-826-11	s	CAPACITOR,CHIP CERAMIC 0.1MF
C321	1-125-891-11	s	CAPACITOR CERAMIC 0.47MF/10V
C324	1-125-891-11	s	CAPACITOR CERAMIC 0.47MF/10V
C327	1-107-420-11	s	CAPACITOR,ELECT 47MF/35V(105C)
C328	1-131-992-11	s	CAP, CERAMIC 100000PF F 1608
C330	1-107-420-11	s	CAPACITOR,ELECT 47MF/35V(105C)
C331	1-131-992-11	s	CAP, CERAMIC 100000PF F 1608
C332	1-107-420-11	s	CAPACITOR,ELECT 47MF/35V(105C)
C333	1-107-420-11	s	CAPACITOR,ELECT 47MF/35V(105C)
C400	1-131-992-11	s	CAP, CERAMIC 100000PF F 1608
C401	1-107-826-11	s	CAPACITOR,CHIP CERAMIC 0.1MF
C402	1-131-992-11	s	CAP, CERAMIC 100000PF F 1608
C403	1-131-992-11	s	CAP, CERAMIC 100000PF F 1608
C404	1-162-970-11	s	CAPACITOR CERAMIC 0.01MF/25V B
C405	1-162-965-11	s	CAPACITOR,CERAMIC 1500PF/50V B
C406	1-162-966-11	s	CAPACITOR,CERAMIC 2200PF/50V B
C407	1-131-992-11	s	CAP, CERAMIC 100000PF F 1608
C408	1-107-420-11	s	CAPACITOR,ELECT 47MF/35V(105C)
C409	1-164-227-11	s	CAPACITOR,CERAMIC 0.022MF/25V
C410	1-115-670-11	s	CAPACITOR ELECT 220MF/35V(CHIP
C412	1-162-966-11	s	CAPACITOR,CERAMIC 2200PF/50V B
C413	1-131-992-11	s	CAP, CERAMIC 100000PF F 1608
C414	1-131-992-11	s	CAP, CERAMIC 100000PF F 1608
C415	1-131-992-11	s	CAP, CERAMIC 100000PF F 1608
C500	1-131-992-11	s	CAP, CERAMIC 100000PF F 1608
C502	1-131-992-11	s	CAP, CERAMIC 100000PF F 1608
C504	1-164-227-11	s	CAPACITOR,CERAMIC 0.022MF/25V
C505	1-164-227-11	s	CAPACITOR,CERAMIC 0.022MF/25V
C506	1-107-420-11	s	CAPACITOR,ELECT 47MF/35V(105C)
C507	1-164-227-11	s	CAPACITOR,CERAMIC 0.022MF/25V
C508	1-164-227-11	s	CAPACITOR,CERAMIC 0.022MF/25V
C509	1-164-227-11	s	CAPACITOR,CERAMIC 0.022MF/25V
C510	1-164-227-11	s	CAPACITOR,CERAMIC 0.022MF/25V
C512	1-126-399-11	s	CAPACITOR ELECT 10MF/35V(CHIP)
C513	1-126-399-11	s	CAPACITOR ELECT 10MF/35V(CHIP)
C514	1-126-399-11	s	CAPACITOR ELECT 10MF/35V(CHIP)
C515	1-115-416-11	s	CAPACITOR,CERAMIC 1000PF/25V
C516	1-107-420-11	s	CAPACITOR,ELECT 47MF/35V(105C)
C517	1-162-970-11	s	CAPACITOR CERAMIC 0.01MF/25V B
C518	1-162-970-11	s	CAPACITOR CERAMIC 0.01MF/25V B
C519	1-162-970-11	s	CAPACITOR CERAMIC 0.01MF/25V B
C520	1-128-401-11	s	CAPACITOR,ELECT100MF/25V(CHIP)
C521	1-107-826-11	s	CAPACITOR,CHIP CERAMIC 0.1MF
C522	1-107-826-11	s	CAPACITOR,CHIP CERAMIC 0.1MF
C600	1-162-967-11	s	CAPACITOR,CERAMIC 3300PF/50V B
C601	1-162-967-11	s	CAPACITOR,CERAMIC 3300PF/50V B
C602	1-162-968-11	s	CAPACITOR,CERAMIC 4700PF/50V B
C603	1-162-968-11	s	CAPACITOR,CERAMIC 4700PF/50V B
C605	1-165-176-11	s	CAPACITOR,CERAMIC 47000PF/16V
C606	1-165-176-11	s	CAPACITOR,CERAMIC 47000PF/16V
C607	1-131-992-11	s	CAP, CERAMIC 100000PF F 1608
C608	1-131-992-11	s	CAP, CERAMIC 100000PF F 1608

(DR-508 BOARD)

Ref. No. or Q'ty	Part No.	SP	Description
C609	1-162-959-11	s	CAPACITOR,CERAMIC 330PF/50V SL
C610	1-162-959-11	s	CAPACITOR,CERAMIC 330PF/50V SL
C611	1-126-395-11	s	CAPACITOR,ELECT 22MF/16V(CHIP)
C612	1-126-395-11	s	CAPACITOR,ELECT 22MF/16V(CHIP)
C614	1-164-392-11	s	CAPACITOR CERAMIC 390PF/50V CH
C616	1-127-573-11	s	CAPACITOR,CERAMIC 1MFB(2012)
C621	1-131-992-11	s	CAP, CERAMIC 100000PF F 1608
C623	1-162-970-11	s	CAPACITOR CERAMIC 0.01MF/25V B
C624	1-164-227-11	s	CAPACITOR,CERAMIC 0.022MF/25V
C626	1-131-992-11	s	CAP, CERAMIC 100000PF F 1608
C627	1-131-992-11	s	CAP, CERAMIC 100000PF F 1608
C629	1-126-400-11	s	CAPACITOR ELECT 22MF/35V(CHIP)
C632	1-126-396-11	s	CAPACITOR,ELECT 47MF/16V(CHIP)
C636	1-107-826-11	s	CAPACITOR,CHIP CERAMIC 0.1MF
C637	1-162-970-11	s	CAPACITOR CERAMIC 0.01MF/25V B
C638	1-107-826-11	s	CAPACITOR,CHIP CERAMIC 0.1MF
C639	1-162-970-11	s	CAPACITOR CERAMIC 0.01MF/25V B
C641	1-115-414-11	s	CAPACITOR,CHIP CERAMIC 820PF
C642	1-131-992-11	s	CAP, CERAMIC 100000PF F 1608
C643	1-127-692-11	s	CAP, CHIP CERAMIC 10MF B 3216
C644	1-127-692-11	s	CAP, CHIP CERAMIC 10MF B 3216
C645	1-127-692-11	s	CAP, CHIP CERAMIC 10MF B 3216
C646	1-107-826-11	s	CAPACITOR,CHIP CERAMIC 0.1MF
C647	1-107-826-11	s	CAPACITOR,CHIP CERAMIC 0.1MF
C648	1-164-217-11	s	CAPACITOR,CERAMIC 150PF/50V CH
C649	1-107-826-11	s	CAPACITOR,CHIP CERAMIC 0.1MF
C650	1-107-826-11	s	CAPACITOR,CHIP CERAMIC 0.1MF
C651	1-131-992-11	s	CAP, CERAMIC 100000PF F 1608
C653	1-162-970-11	s	CAPACITOR CERAMIC 0.01MF/25V B
C654	1-162-970-11	s	CAPACITOR CERAMIC 0.01MF/25V B
C656	1-162-965-11	s	CAPACITOR,CERAMIC 1500PF/50V B
C657	1-131-992-11	s	CAP, CERAMIC 100000PF F 1608
C659	1-115-416-11	s	CAPACITOR,CERAMIC 1000PF/25V
C660	1-162-970-11	s	CAPACITOR CERAMIC 0.01MF/25V B
C700	1-126-394-11	s	CAPACITOR,ELECT 10MF/16V(CHIP)
C701	1-131-992-11	s	CAP, CERAMIC 100000PF F 1608
C702	1-125-891-11	s	CAPACITOR CERAMIC 0.47MF/10V
C703	1-162-927-11	s	CAPACITOR,CERAMIC 100PF/50V CH
C705	1-128-401-11	s	CAPACITOR,ELECT100MF/25V(CHIP)
C706	1-128-401-11	s	CAPACITOR,ELECT100MF/25V(CHIP)
C707	1-128-401-11	s	CAPACITOR,ELECT100MF/25V(CHIP)
C708	1-107-420-11	s	CAPACITOR,ELECT 47MF/35V(105C)
C709	1-162-965-11	s	CAPACITOR,CERAMIC 1500PF/50V B
C710	1-164-227-11	s	CAPACITOR,CERAMIC 0.022MF/25V
C711	1-164-227-11	s	CAPACITOR,CERAMIC 0.022MF/25V
C712	1-131-992-11	s	CAP, CERAMIC 100000PF F 1608
C713	1-162-966-11	s	CAPACITOR,CERAMIC 2200PF/50V B
C714	1-107-420-11	s	CAPACITOR,ELECT 47MF/35V(105C)
C715	1-128-401-11	s	CAPACITOR,ELECT100MF/25V(CHIP)
C716	1-164-227-11	s	CAPACITOR,CERAMIC 0.022MF/25V
C719	1-164-227-11	s	CAPACITOR,CERAMIC 0.022MF/25V
C720	1-107-420-11	s	CAPACITOR,ELECT 47MF/35V(105C)
C721	1-107-420-11	s	CAPACITOR,ELECT 47MF/35V(105C)
C722	1-127-738-11	s	CAPACITOR, CERAMIC 4.7MF/25V
C723	1-127-738-11	s	CAPACITOR, CERAMIC 4.7MF/25V
C724	1-131-992-11	s	CAP, CERAMIC 100000PF F 1608
C725	1-131-992-11	s	CAP, CERAMIC 100000PF F 1608
C726	1-164-315-11	s	CAPACITOR,CERAMIC 470PF/50V CH
C729	1-126-399-11	s	CAPACITOR ELECT 10MF/35V(CHIP)

(DR-508 BOARD)

Ref. No. or Q'ty	Part No.	SP	Description
C730	1-165-811-11	s	CAPACITOR CHIP CERAMIC 22MF B
C731	1-131-992-11	s	CAP, CERAMIC 100000PF F 1608
C733	1-131-992-11	s	CAP, CERAMIC 100000PF F 1608
C736	1-135-347-11	s	CAP, SOLID ELECT 82MF
C740	1-162-927-11	s	CAPACITOR,CERAMIC 100PF/50V CH
C741	1-135-342-11	s	CAPACITOR,SOLID ELECT 56MF
C742	1-135-342-11	s	CAPACITOR,SOLID ELECT 56MF
C743	1-131-992-11	s	CAP, CERAMIC 100000PF F 1608
C744	1-131-992-11	s	CAP, CERAMIC 100000PF F 1608
C745	1-104-607-11	s	CAPACITOR ELECT 47MF/16V(105C)
C746	1-104-607-11	s	CAPACITOR ELECT 47MF/16V(105C)
C747	1-164-227-11	s	CAPACITOR,CERAMIC 0.022MF/25V
C750	1-131-992-11	s	CAP, CERAMIC 100000PF F 1608
C751	1-165-884-91	s	CAPACITOR, CERAMIC 2.2MF(1608)
C752	1-162-927-11	s	CAPACITOR,CERAMIC 100PF/50V CH
C753	1-162-965-11	s	CAPACITOR,CERAMIC 1500PF/50V B
C755	1-131-992-11	s	CAP, CERAMIC 100000PF F 1608
C756	1-162-966-11	s	CAPACITOR,CERAMIC 2200PF/50V B
C757	1-164-227-11	s	CAPACITOR,CERAMIC 0.022MF/25V
C758	1-164-227-11	s	CAPACITOR,CERAMIC 0.022MF/25V
C759	1-164-227-11	s	CAPACITOR,CERAMIC 0.022MF/25V
C760	1-164-227-11	s	CAPACITOR,CERAMIC 0.022MF/25V
C762	1-164-227-11	s	CAPACITOR,CERAMIC 0.022MF/25V
C765	1-107-420-11	s	CAPACITOR,ELECT 47MF/35V(105C)
C766	1-107-420-11	s	CAPACITOR,ELECT 47MF/35V(105C)
C768	1-107-420-11	s	CAPACITOR,ELECT 47MF/35V(105C)
C769	1-107-420-11	s	CAPACITOR,ELECT 47MF/35V(105C)
C770	1-164-227-11	s	CAPACITOR,CERAMIC 0.022MF/25V
C771	1-164-227-11	s	CAPACITOR,CERAMIC 0.022MF/25V
C800	1-162-970-11	s	CAPACITOR CERAMIC 0.01MF/25V B
C803	1-131-992-11	s	CAP, CERAMIC 100000PF F 1608
C804	1-131-992-11	s	CAP, CERAMIC 100000PF F 1608
C805	1-164-227-11	s	CAPACITOR,CERAMIC 0.022MF/25V
C806	1-107-826-11	s	CAPACITOR,CHIP CERAMIC 0.1MF
C807	1-164-227-11	s	CAPACITOR,CERAMIC 0.022MF/25V
C808	1-162-966-11	s	CAPACITOR,CERAMIC 2200PF/50V B
C809	1-131-992-11	s	CAP, CERAMIC 100000PF F 1608
C810	1-164-388-91	s	CAPACITOR,CERAMIC 270PF/50V CH
C811	1-164-388-91	s	CAPACITOR,CERAMIC 270PF/50V CH
C812	1-126-399-11	s	CAPACITOR ELECT 10MF/35V(CHIP)
C813	1-131-992-11	s	CAP, CERAMIC 100000PF F 1608
C816	1-162-927-11	s	CAPACITOR,CERAMIC 100PF/50V CH
C817	1-107-419-11	s	CAPACITOR,ELECT 22MF/35V
C818	1-107-420-11	s	CAPACITOR,ELECT 47MF/35V(105C)
C819	1-107-419-11	s	CAPACITOR,ELECT 22MF/35V
C823	1-131-992-11	s	CAP, CERAMIC 100000PF F 1608
C824	1-131-992-11	s	CAP, CERAMIC 100000PF F 1608
C1000	1-162-970-11	s	CAPACITOR CERAMIC 0.01MF/25V B
C1001	1-131-992-11	s	CAP, CERAMIC 100000PF F 1608
C1002	1-131-992-11	s	CAP, CERAMIC 100000PF F 1608
C1003	1-131-992-11	s	CAP, CERAMIC 100000PF F 1608
C1004	1-131-992-11	s	CAP, CERAMIC 100000PF F 1608
C1005	1-164-227-11	s	CAPACITOR,CERAMIC 0.022MF/25V
C1006	1-107-826-11	s	CAPACITOR,CHIP CERAMIC 0.1MF
C1007	1-164-227-11	s	CAPACITOR,CERAMIC 0.022MF/25V
C1008	1-162-966-11	s	CAPACITOR,CERAMIC 2200PF/50V B
C1009	1-131-992-11	s	CAP, CERAMIC 100000PF F 1608
C1010	1-164-388-91	s	CAPACITOR,CERAMIC 270PF/50V CH
C1011	1-164-388-91	s	CAPACITOR,CERAMIC 270PF/50V CH

(DR-508 BOARD)

Ref. No. or Q'ty	Part No.	SP	Description
C1012	1-126-399-11	s	CAPACITOR ELECT 10MF/35V(CHIP)
C1013	1-131-992-11	s	CAP, CERAMIC 100000PF F 1608
C1016	1-162-927-11	s	CAPACITOR,CERAMIC 100PF/50V CH
C1017	1-107-419-11	s	CAPACITOR,ELECT 22MF/35V
C1018	1-107-420-11	s	CAPACITOR,ELECT 47MF/35V(105C)
C1019	1-107-419-11	s	CAPACITOR,ELECT 22MF/35V
C1023	1-131-992-11	s	CAP, CERAMIC 100000PF F 1608
C1024	1-131-992-11	s	CAP, CERAMIC 100000PF F 1608
C1025	1-107-826-11	s	CAPACITOR,CHIP CERAMIC 0.1MF
C1026	1-107-826-11	s	CAPACITOR,CHIP CERAMIC 0.1MF
CN61	1-792-489-11	o	WIRE ASSEMBLY, FLAT TYPE
CN62	1-792-489-11	o	WIRE ASSEMBLY, FLAT TYPE
CN65	1-691-959-11	o	PIN,CONNECTOR (PC BOARD) 4P
CN200	1-778-552-11	o	PIN, CONNECTOR 30P
CN201	1-778-551-11	o	PIN, CONNECTOR 20P
CN202	1-580-539-11	o	PIN, CONNECTOR (PC BOARD) 20P
CN203	1-506-473-11	s	PIN,CONNECTOR 8P
CN204	1-569-363-21	s	CONNECTOR, FPC 15P
CN205	1-569-363-21	s	CONNECTOR, FPC 15P
CN206	1-764-177-11	s	PIN,CONNECTOR (7P)(SMD)(1.5MM)
CN207	1-766-382-11	s	PIN, CONNECTOR (10P)(SMD)(1.5M
CN208	1-506-477-11	o	PIN,CONNECTOR 12P
CN210	1-779-268-21	o	PIN, CONNECTOR (11P)(SMD)(1.5M
CN212	1-691-550-11	s	PIN,CONNECTOR (3P)(SMD)(1.5MM)
CN213	1-564-001-11	o	PIN, CONNECTOR (2P)
CN214	1-564-001-11	o	PIN, CONNECTOR (2P)
CN215	1-695-320-11	o	PIN,CONNECTOR (2P)(SMD)(1.5MM)
CN216	1-506-476-11	s	PIN,CONNECTOR 11P
D200	8-719-801-78	s	DIODE 1SS184
D201	8-719-801-78	s	DIODE 1SS184
D202	8-719-801-78	s	DIODE 1SS184
D203	8-719-801-78	s	DIODE 1SS184
D204	8-719-024-81	s	DIODE 1SS300-TE85L
D205	8-719-024-81	s	DIODE 1SS300-TE85L
D206	8-719-024-81	s	DIODE 1SS300-TE85L
D207	8-719-024-81	s	DIODE 1SS300-TE85L
D302	8-719-024-81	s	DIODE 1SS300-TE85L
D303	8-719-024-81	s	DIODE 1SS300-TE85L
D305	8-719-073-92	s	DIODE RB060L-40TE25
D306	8-719-073-92	s	DIODE RB060L-40TE25
D401	8-719-073-92	s	DIODE RB060L-40TE25
D402	8-719-024-81	s	DIODE 1SS300-TE85L
D500	8-719-048-98	s	DIODE RB160L-40TE25
D501	8-719-048-98	s	DIODE RB160L-40TE25
D502	8-719-048-98	s	DIODE RB160L-40TE25
D503	8-719-048-98	s	DIODE RB160L-40TE25
D504	8-719-048-98	s	DIODE RB160L-40TE25
D505	8-719-048-98	s	DIODE RB160L-40TE25
D506	8-719-048-98	s	DIODE RB160L-40TE25
D507	8-719-048-98	s	DIODE RB160L-40TE25
D508	8-719-048-98	s	DIODE RB160L-40TE25
D509	8-719-048-98	s	DIODE RB160L-40TE25
D511	8-719-048-98	s	DIODE RB160L-40TE25
D512	8-719-048-98	s	DIODE RB160L-40TE25
D513	8-719-048-98	s	DIODE RB160L-40TE25
D514	8-719-048-98	s	DIODE RB160L-40TE25
D601	8-719-024-81	s	DIODE 1SS300-TE85L
D602	8-719-024-81	s	DIODE 1SS300-TE85L

(DR-508 BOARD)

Ref. No. or Q'ty	Part No.	SP	Description
D700	8-719-073-92	s	DIODE RB060L-40TE25
D701	8-719-066-98	s	DIODE RB051L-40
D702	8-719-066-98	s	DIODE RB051L-40
D703	8-719-073-92	s	DIODE RB060L-40TE25
D800	8-719-024-81	s	DIODE 1SS300-TE85L
D1000	8-719-024-81	s	DIODE 1SS300-TE85L
F1	⚠ 1-576-328-11	s	FUSE (SMD)
F400	⚠ 1-576-269-11	s	FUSE CHIP 3.15A/125V (6125)
F500	⚠ 1-576-269-11	s	FUSE CHIP 3.15A/125V (6125)
F700	⚠ 1-533-627-21	s	FUSE CHIP 5A/125V (6125)
F701	⚠ 1-576-270-11	s	FUSE CHIP 4A/125V (6125)
F702	⚠ 1-576-212-21	s	FUSE CHIP 1.25A (6125)
F703	⚠ 1-576-212-21	s	FUSE CHIP 1.25A (6125)
F704	⚠ 1-576-212-21	s	FUSE CHIP 1.25A (6125)
F705	⚠ 1-576-212-21	s	FUSE CHIP 1.25A (6125)
F706	⚠ 1-533-627-21	s	FUSE CHIP 5A/125V (6125)
F800	⚠ 1-533-627-21	s	FUSE CHIP 5A/125V (6125)
F1000	⚠ 1-533-627-21	s	FUSE CHIP 5A/125V (6125)
IC1	8-759-491-50	s	IC TC74VHCT244AFT(EL)
IC2	8-759-491-50	s	IC TC74VHCT244AFT(EL)
IC3	8-759-549-15	s	IC SN74LV245APWR
IC4	8-759-549-01	s	IC SN74LV125APWR
IC100	8-752-903-31	o	IC CXP87860-064Q
IC101	8-759-445-94	s	IC AK6480AM-E2
IC103	6-706-487-01	s	IC TC7SH08FU(T5RSOYJF)
IC104	8-759-523-78	s	IC TC74VHC00FT(EL)
IC105	6-703-188-01	s	IC S-80827CNNB-B8MT2G
IC106	8-759-445-94	s	IC AK6480AM-E2
IC200	8-759-523-84	s	IC TC74VHC14FT (EL)
IC201	8-759-523-84	s	IC TC74VHC14FT (EL)
IC202	8-759-523-84	s	IC TC74VHC14FT (EL)
IC205	6-706-488-01	s	IC TC7SH14FU(T5RSOYJF)
IC207	8-759-833-99	s	IC MC74HC4052ADTR2
IC208	8-759-833-99	s	IC MC74HC4052ADTR2
IC209	8-759-833-99	s	IC MC74HC4052ADTR2
IC210	8-759-833-99	s	IC MC74HC4052ADTR2
IC300	8-759-112-58	s	IC UPC1246G
IC301	8-759-337-40	s	IC NJM2904V(TE2)
IC302	8-759-338-95	s	IC NJM2903V (TE2)
IC303	8-759-338-95	s	IC NJM2903V (TE2)
IC304	8-759-338-95	s	IC NJM2903V (TE2)
IC305	8-759-422-21	s	IC NJM4580VTE2
IC401	8-759-278-58	s	IC NJM4558V (TE2)
IC410	8-759-422-21	s	IC NJM4580VTE2
IC411	8-759-278-58	s	IC NJM4558V (TE2)
IC500	8-759-234-04	s	IC TA7267BP
IC501	8-759-234-04	s	IC TA7267BP
IC502	8-759-234-04	s	IC TA7267BP
IC503	8-759-337-40	s	IC NJM2904V(TE2)
IC504	8-759-337-40	s	IC NJM2904V(TE2)
IC604	6-702-295-01	s	IC NJM78M12DL1A-TE1
IC605	8-759-530-05	s	IC TC4053BFT (EL.N)
IC606	8-759-278-58	s	IC NJM4558V (TE2)
IC607	8-759-710-28	s	IC NJM4565M-A
IC608	8-759-106-02	s	IC UPC4570G2
IC609	8-759-530-05	s	IC TC4053BFT (EL.N)
IC610	8-759-523-78	s	IC TC74VHC00FT(EL)
IC611	8-759-530-05	s	IC TC4053BFT (EL.N)

(DR-508 BOARD)

Ref. No. or Q'ty	Part No.	SP	Description
IC612	8-759-338-95	s	IC NJM2903V (TE2)
IC613	6-702-495-01	s	IC LA7205M-TLM-E
IC614	6-702-495-01	s	IC LA7205M-TLM-E
IC615	8-759-530-05	s	IC TC4053BFT (EL.N)
IC700	8-759-183-53	s	IC TL431CPK-E2
IC701	8-759-937-36	s	IC TL1451ACNS
IC703	8-759-182-84	s	IC PQ05SZ5U
IC705	8-759-337-40	s	IC NJM2904V(TE2)
IC706	8-759-338-95	s	IC NJM2903V (TE2)
IC707	8-759-338-95	s	IC NJM2903V (TE2)
IC708	8-759-337-40	s	IC NJM2904V(TE2)
IC709	8-759-337-40	s	IC NJM2904V(TE2)
IC800	8-759-278-58	s	IC NJM4558V (TE2)
IC801	8-759-906-22	s	IC MB3759PF
IC802	8-759-422-21	s	IC NJM4580VTE2
IC804	8-759-523-87	s	IC TC4049BF
IC805	8-759-278-58	s	IC NJM4558V (TE2)
IC1000	8-759-278-58	s	IC NJM4558V (TE2)
IC1001	8-759-906-22	s	IC MB3759PF
IC1002	8-759-422-21	s	IC NJM4580VTE2
IC1004	8-759-523-87	s	IC TC4049BF
L300	1-406-749-11	s	COIL, CHOKE 100UH
L400	9-910-999-34	s	DELETED FROM RP MASTER
L500	9-910-999-34	s	DELETED FROM RP MASTER
L600	1-414-404-11	s	INDUCTOR (SMD) 100UH
L601	1-414-404-11	s	INDUCTOR (SMD) 100UH
L700	1-406-749-11	s	COIL, CHOKE 100UH
L702	1-416-344-11	s	COIL, CHOKE 10UH
L703	1-416-344-11	s	COIL, CHOKE 10UH
L704	1-416-344-11	s	COIL, CHOKE 10UH
L705	1-416-344-11	s	COIL, CHOKE 10UH
L706	1-400-175-21	s	COIL, CHOKE 47UH
L707	1-400-175-21	s	COIL, CHOKE 47UH
L708	1-416-344-11	s	COIL, CHOKE 10UH
L709	1-416-344-11	s	COIL, CHOKE 10UH
L710	1-416-344-11	s	COIL, CHOKE 10UH
L711	1-406-749-11	s	COIL, CHOKE 100UH
L712	1-416-344-11	s	COIL, CHOKE 10UH
L800	1-400-175-21	s	COIL, CHOKE 47UH
L801	1-400-175-21	s	COIL, CHOKE 47UH
L1000	1-400-175-21	s	COIL, CHOKE 47UH
L1001	1-400-175-21	s	COIL, CHOKE 47UH
PH201	8-719-939-05	s	PHOTO INTERRUPTER GP1S54
PH202	8-719-939-05	s	PHOTO INTERRUPTER GP1S54
PH203	8-719-939-05	s	PHOTO INTERRUPTER GP1S54
PH204	8-719-939-05	s	PHOTO INTERRUPTER GP1S54
Q100	8-729-039-57	s	TRANSISTOR DTC363EKT146
Q101	8-729-928-81	s	TRANSISTOR DTC144EE
Q201	8-729-117-31	s	TRANSISTOR 2SC4177-L5
Q202	8-729-117-31	s	TRANSISTOR 2SC4177-L5
Q203	8-729-117-31	s	TRANSISTOR 2SC4177-L5
Q204	8-729-117-31	s	TRANSISTOR 2SC4177-L5
Q205	8-729-140-63	s	TRANSISTOR 2SA1611-M5M6
Q206	8-729-928-81	s	TRANSISTOR DTC144EE
Q207	8-729-044-58	s	TRANSISTOR SI2304DS-T1
Q208	8-729-046-75	s	TRANSISTOR SI2301DS-T1
Q300	8-729-117-32	s	TRANSISTOR 2SC4177

(DR-508 BOARD)

Ref. No. or Q'ty	Part No.	SP	Description
Q301	8-729-140-63	s	TRANSISTOR 2SA1611-M5M6
Q302	8-729-040-75	s	TRANSISTOR SI4953DY
Q303	8-729-928-81	s	TRANSISTOR DTC144EE
Q304	8-729-928-81	s	TRANSISTOR DTC144EE
Q305	8-729-140-63	s	TRANSISTOR 2SA1611-M5M6
Q306	8-729-117-32	s	TRANSISTOR 2SC4177
Q307	8-729-047-32	s	TRANSISTOR SI4425DY-T1
Q308	8-729-046-11	s	TRANSISTOR SI4420DY-T1
Q309	8-729-928-81	s	TRANSISTOR DTC144EE
Q310	8-729-140-63	s	TRANSISTOR 2SA1611-M5M6
Q311	8-729-117-32	s	TRANSISTOR 2SC4177
Q312	8-729-047-32	s	TRANSISTOR SI4425DY-T1
Q313	8-729-046-11	s	TRANSISTOR SI4420DY-T1
Q314	8-729-928-81	s	TRANSISTOR DTC144EE
Q315	8-729-140-63	s	TRANSISTOR 2SA1611-M5M6
Q316	8-729-117-32	s	TRANSISTOR 2SC4177
Q317	8-729-047-32	s	TRANSISTOR SI4425DY-T1
Q318	8-729-046-11	s	TRANSISTOR SI4420DY-T1
Q319	8-729-140-63	s	TRANSISTOR 2SA1611-M5M6
Q323	8-729-209-07	s	TRANSISTOR 2SC4213-B
Q400	8-729-117-32	s	TRANSISTOR 2SC4177
Q401	8-729-140-63	s	TRANSISTOR 2SA1611-M5M6
Q426	8-729-040-75	s	TRANSISTOR SI4953DY
Q500	8-729-928-81	s	TRANSISTOR DTC144EE
Q501	8-729-117-32	s	TRANSISTOR 2SC4177
Q502	8-729-140-63	s	TRANSISTOR 2SA1611-M5M6
Q503	8-729-024-50	s	TRANSISTOR SI9936DY
Q504	8-729-024-50	s	TRANSISTOR SI9936DY
Q505	8-729-024-50	s	TRANSISTOR SI9936DY
Q506	8-729-024-50	s	TRANSISTOR SI9936DY
Q603	8-729-928-81	s	TRANSISTOR DTC144EE
Q604	8-729-928-81	s	TRANSISTOR DTC144EE
Q605	8-729-140-63	s	TRANSISTOR 2SA1611-M5M6
Q606	8-729-928-81	s	TRANSISTOR DTC144EE
Q607	8-729-928-81	s	TRANSISTOR DTC144EE
Q608	8-729-928-81	s	TRANSISTOR DTC144EE
Q609	8-729-928-81	s	TRANSISTOR DTC144EE
Q700	8-729-928-81	s	TRANSISTOR DTC144EE
Q701	8-729-928-81	s	TRANSISTOR DTC144EE
Q702	8-729-928-81	s	TRANSISTOR DTC144EE
Q703	8-729-117-32	s	TRANSISTOR 2SC4177
Q704	8-729-140-63	s	TRANSISTOR 2SA1611-M5M6
Q705	8-729-928-81	s	TRANSISTOR DTC144EE
Q706	8-729-040-75	s	TRANSISTOR SI4953DY
Q707	8-729-928-81	s	TRANSISTOR DTC144EE
Q708	8-729-040-75	s	TRANSISTOR SI4953DY
Q709	8-729-928-81	s	TRANSISTOR DTC144EE
Q710	8-729-140-63	s	TRANSISTOR 2SA1611-M5M6
Q711	8-729-117-32	s	TRANSISTOR 2SC4177
Q712	8-729-140-63	s	TRANSISTOR 2SA1611-M5M6
Q713	8-729-117-32	s	TRANSISTOR 2SC4177
Q714	8-729-140-63	s	TRANSISTOR 2SA1611-M5M6
Q715	8-729-046-75	s	TRANSISTOR SI2301DS-T1
Q716	8-729-046-75	s	TRANSISTOR SI2301DS-T1
Q717	8-729-046-75	s	TRANSISTOR SI2301DS-T1
Q718	8-729-928-81	s	TRANSISTOR DTC144EE
Q719	8-729-140-63	s	TRANSISTOR 2SA1611-M5M6
Q720	8-729-117-32	s	TRANSISTOR 2SC4177
Q721	8-729-117-32	s	TRANSISTOR 2SC4177

(DR-508 BOARD)

Ref. No. or Q'ty	Part No.	SP	Description
Q722	8-729-140-63	s	TRANSISTOR 2SA1611-M5M6
Q723	8-729-808-02	s	TRANSISTOR 2SD1622
Q724	8-729-903-46	s	TRANSISTOR 2SB1132-P
Q725	8-729-117-32	s	TRANSISTOR 2SC4177
Q726	8-729-140-63	s	TRANSISTOR 2SA1611-M5M6
Q727	8-729-046-75	s	TRANSISTOR SI2301DS-T1
Q800	8-729-928-81	s	TRANSISTOR DTC144EE
Q801	8-729-928-81	s	TRANSISTOR DTC144EE
Q802	8-729-117-32	s	TRANSISTOR 2SC4177
Q803	8-729-140-63	s	TRANSISTOR 2SA1611-M5M6
Q804	8-729-117-32	s	TRANSISTOR 2SC4177
Q805	8-729-140-63	s	TRANSISTOR 2SA1611-M5M6
Q806	8-729-040-75	s	TRANSISTOR SI4953DY
Q807	8-729-024-50	s	TRANSISTOR SI9936DY
Q808	8-729-040-75	s	TRANSISTOR SI4953DY
Q809	8-729-117-32	s	TRANSISTOR 2SC4177
Q810	8-729-140-63	s	TRANSISTOR 2SA1611-M5M6
Q811	8-729-117-32	s	TRANSISTOR 2SC4177
Q812	8-729-140-63	s	TRANSISTOR 2SA1611-M5M6
Q813	8-729-024-50	s	TRANSISTOR SI9936DY
Q1000	8-729-928-81	s	TRANSISTOR DTC144EE
Q1001	8-729-928-81	s	TRANSISTOR DTC144EE
Q1002	8-729-117-32	s	TRANSISTOR 2SC4177
Q1003	8-729-140-63	s	TRANSISTOR 2SA1611-M5M6
Q1004	8-729-117-32	s	TRANSISTOR 2SC4177
Q1005	8-729-140-63	s	TRANSISTOR 2SA1611-M5M6
Q1006	8-729-040-75	s	TRANSISTOR SI4953DY
Q1007	8-729-024-50	s	TRANSISTOR SI9936DY
Q1008	8-729-040-75	s	TRANSISTOR SI4953DY
Q1009	8-729-117-32	s	TRANSISTOR 2SC4177
Q1010	8-729-140-63	s	TRANSISTOR 2SA1611-M5M6
Q1011	8-729-117-32	s	TRANSISTOR 2SC4177
Q1012	8-729-140-63	s	TRANSISTOR 2SA1611-M5M6
Q1013	8-729-024-50	s	TRANSISTOR SI9936DY
R100	1-218-887-11	s	RESISTOR,CHIP 47K 1/10W (1608)
R101	1-218-887-11	s	RESISTOR,CHIP 47K 1/10W (1608)
R102	1-218-887-11	s	RESISTOR,CHIP 47K 1/10W (1608)
R103	1-218-863-11	s	RESISTOR,CHIP 4.7K 1/10W(1608)
R104	1-216-864-11	s	CONDUCTOR, CHIP (1608)
R105	1-216-864-11	s	CONDUCTOR, CHIP (1608)
R106	1-216-864-11	s	CONDUCTOR, CHIP (1608)
R107	1-216-864-11	s	CONDUCTOR, CHIP (1608)
R108	1-218-847-11	s	RESISTOR, CHIP 1K 1/10W (1608)
R109	1-218-895-11	s	RESISTOR,CHIP 100K 1/10W(1608)
R110	1-218-895-11	s	RESISTOR,CHIP 100K 1/10W(1608)
R111	1-218-855-11	s	RESISTOR,CHIP 2.2K 1/10W(1608)
R112	1-218-895-11	s	RESISTOR,CHIP 100K 1/10W(1608)
R113	1-218-863-11	s	RESISTOR,CHIP 4.7K 1/10W(1608)
R114	1-218-895-11	s	RESISTOR,CHIP 100K 1/10W(1608)
R115	1-218-895-11	s	RESISTOR,CHIP 100K 1/10W(1608)
R116	1-218-847-11	s	RESISTOR, CHIP 1K 1/10W (1608)
R117	1-218-871-11	s	RESISTOR,CHIP 10K 1/10W (1608)
R118	1-218-871-11	s	RESISTOR,CHIP 10K 1/10W (1608)
R119	1-218-875-11	s	RESISTOR,CHIP 15K 1/10W (1608)
R120	1-218-863-11	s	RESISTOR,CHIP 4.7K 1/10W(1608)
R121	1-218-863-11	s	RESISTOR,CHIP 4.7K 1/10W(1608)
R122	1-218-863-11	s	RESISTOR,CHIP 4.7K 1/10W(1608)
R123	1-218-863-11	s	RESISTOR,CHIP 4.7K 1/10W(1608)
R124	1-218-863-11	s	RESISTOR,CHIP 4.7K 1/10W(1608)

(DR-508 BOARD)

Ref. No. or Q'ty	Part No.	SP	Description
R125	1-218-847-11	s	RESISTOR, CHIP 1K 1/10W (1608)
R126	1-218-847-11	s	RESISTOR, CHIP 1K 1/10W (1608)
R127	1-218-863-11	s	RESISTOR,CHIP 4.7K 1/10W(1608)
R204	1-218-847-11	s	RESISTOR, CHIP 1K 1/10W (1608)
R205	1-218-847-11	s	RESISTOR, CHIP 1K 1/10W (1608)
R206	1-218-859-11	s	RESISTOR,CHIP 3.3K 1/10W(1608)
R207	1-218-859-11	s	RESISTOR,CHIP 3.3K 1/10W(1608)
R208	1-218-895-11	s	RESISTOR,CHIP 100K 1/10W(1608)
R209	1-218-823-11	s	RESISTOR,CHIP 100 1/10W (1608)
R215	1-218-859-11	s	RESISTOR,CHIP 3.3K 1/10W(1608)
R216	1-218-859-11	s	RESISTOR,CHIP 3.3K 1/10W(1608)
R217	1-218-895-11	s	RESISTOR,CHIP 100K 1/10W(1608)
R218	1-218-823-11	s	RESISTOR,CHIP 100 1/10W (1608)
R219	1-218-859-11	s	RESISTOR,CHIP 3.3K 1/10W(1608)
R220	1-218-859-11	s	RESISTOR,CHIP 3.3K 1/10W(1608)
R221	1-218-895-11	s	RESISTOR,CHIP 100K 1/10W(1608)
R222	1-218-823-11	s	RESISTOR,CHIP 100 1/10W (1608)
R223	1-218-859-11	s	RESISTOR,CHIP 3.3K 1/10W(1608)
R224	1-218-871-11	s	RESISTOR,CHIP 10K 1/10W (1608)
R225	1-218-887-11	s	RESISTOR,CHIP 47K 1/10W (1608)
R226	1-218-859-11	s	RESISTOR,CHIP 3.3K 1/10W(1608)
R227	1-218-887-11	s	RESISTOR,CHIP 47K 1/10W (1608)
R228	1-218-895-11	s	RESISTOR,CHIP 100K 1/10W(1608)
R229	1-218-823-11	s	RESISTOR,CHIP 100 1/10W (1608)
R230	1-218-859-11	s	RESISTOR,CHIP 3.3K 1/10W(1608)
R231	1-218-829-11	s	RESISTOR,CHIP 180 1/10W (1608)
R232	1-218-863-11	s	RESISTOR,CHIP 4.7K 1/10W(1608)
R233	1-218-895-11	s	RESISTOR,CHIP 100K 1/10W(1608)
R234	1-218-871-11	s	RESISTOR,CHIP 10K 1/10W (1608)
R235	1-218-871-11	s	RESISTOR,CHIP 10K 1/10W (1608)
R236	1-218-882-11	s	RESISTOR, CHIP 30K 1/10W(1608)
R237	1-218-861-11	s	RESISTOR,CHIP 3.9K 1/10W(1608)
R238	1-218-844-11	s	RESISTOR,CHIP 750 1/10W (1608)
R300	1-218-847-11	s	RESISTOR, CHIP 1K 1/10W (1608)
R301	1-218-871-11	s	RESISTOR,CHIP 10K 1/10W (1608)
R302	1-218-847-11	s	RESISTOR, CHIP 1K 1/10W (1608)
R305	1-216-864-11	s	CONDUCTOR, CHIP (1608)
R306	1-218-879-11	s	RESISTOR,CHIP 22K 1/10W (1608)
R307	1-218-863-11	s	RESISTOR,CHIP 4.7K 1/10W(1608)
R308	1-218-889-11	s	RESISTOR,CHIP 56K 1/10W(1608)
R309	1-218-875-11	s	RESISTOR,CHIP 15K 1/10W (1608)
R310	1-218-879-11	s	RESISTOR,CHIP 22K 1/10W (1608)
R311	1-218-877-11	s	RESISTOR,CHIP 18K 1/10W (1608)
R312	1-218-855-11	s	RESISTOR,CHIP 2.2K 1/10W(1608)
R313	1-218-889-11	s	RESISTOR,CHIP 56K 1/10W(1608)
R314	1-218-891-11	s	RESISTOR,CHIP 68K 1/10W (1608)
R315	1-218-863-11	s	RESISTOR,CHIP 4.7K 1/10W(1608)
R316	1-218-871-11	s	RESISTOR,CHIP 10K 1/10W (1608)
R317	1-218-855-11	s	RESISTOR,CHIP 2.2K 1/10W(1608)
R318	1-218-879-11	s	RESISTOR,CHIP 22K 1/10W (1608)
R319	1-218-871-11	s	RESISTOR,CHIP 10K 1/10W (1608)
R320	1-218-879-11	s	RESISTOR,CHIP 22K 1/10W (1608)
R321	1-218-883-11	s	RESISTOR,CHIP 33K 1/10W (1608)
R322	1-218-839-11	s	RESISTOR,CHIP 470 1/10W (1608)
R323	1-218-889-11	s	RESISTOR,CHIP 56K 1/10W(1608)
R324	1-218-871-11	s	RESISTOR,CHIP 10K 1/10W (1608)
R325	1-218-889-11	s	RESISTOR,CHIP 56K 1/10W(1608)
R328	1-218-879-11	s	RESISTOR,CHIP 22K 1/10W (1608)
R329	1-218-889-11	s	RESISTOR,CHIP 56K 1/10W(1608)

(DR-508 BOARD)

Ref. No. or Q'ty	Part No.	SP	Description
R330	1-218-871-11	s	RESISTOR,CHIP 10K 1/10W (1608)
R331	1-218-871-11	s	RESISTOR,CHIP 10K 1/10W (1608)
R332	1-218-887-11	s	RESISTOR,CHIP 47K 1/10W (1608)
R334	1-218-855-11	s	RESISTOR,CHIP 2.2K 1/10W(1608)
R335	1-218-855-11	s	RESISTOR,CHIP 2.2K 1/10W(1608)
R336	1-218-855-11	s	RESISTOR,CHIP 2.2K 1/10W(1608)
R337	1-218-879-11	s	RESISTOR,CHIP 22K 1/10W (1608)
R338	1-218-865-11	s	RESISTOR,CHIP 5.6K 1/10W(1608)
R339	1-218-887-11	s	RESISTOR,CHIP 47K 1/10W (1608)
R340	1-218-865-11	s	RESISTOR,CHIP 5.6K 1/10W(1608)
R341	1-218-855-11	s	RESISTOR,CHIP 2.2K 1/10W(1608)
R342	1-218-855-11	s	RESISTOR,CHIP 2.2K 1/10W(1608)
R343	1-218-855-11	s	RESISTOR,CHIP 2.2K 1/10W(1608)
R344	1-218-847-11	s	RESISTOR, CHIP 1K 1/10W (1608)
R345	1-218-847-11	s	RESISTOR, CHIP 1K 1/10W (1608)
R346	1-218-875-11	s	RESISTOR,CHIP 15K 1/10W (1608)
R347	1-218-875-11	s	RESISTOR,CHIP 15K 1/10W (1608)
R348	1-218-877-11	s	RESISTOR,CHIP 18K 1/10W (1608)
R349	1-218-877-11	s	RESISTOR,CHIP 18K 1/10W (1608)
R350	1-218-883-11	s	RESISTOR,CHIP 33K 1/10W (1608)
R351	1-218-895-11	s	RESISTOR,CHIP 100K 1/10W(1608)
R352	1-216-855-11	s	RESISTOR, CHIP 680K 1/10W 1608
R353	1-218-907-11	s	RESISTOR,CHIP 330K 1/10W(1608)
R354	1-218-879-11	s	RESISTOR,CHIP 22K 1/10W (1608)
R355	1-218-855-11	s	RESISTOR,CHIP 2.2K 1/10W(1608)
R356	1-218-863-11	s	RESISTOR,CHIP 4.7K 1/10W(1608)
R357	1-218-887-11	s	RESISTOR,CHIP 47K 1/10W (1608)
R358	1-218-855-11	s	RESISTOR,CHIP 2.2K 1/10W(1608)
R359	1-218-855-11	s	RESISTOR,CHIP 2.2K 1/10W(1608)
R360	1-218-855-11	s	RESISTOR,CHIP 2.2K 1/10W(1608)
R362	1-218-871-11	s	RESISTOR,CHIP 10K 1/10W (1608)
R365	1-218-907-11	s	RESISTOR,CHIP 330K 1/10W(1608)
R366	1-218-895-11	s	RESISTOR,CHIP 100K 1/10W(1608)
R368	1-218-881-11	s	RESISTOR, CHIP 27K 1/10W(1608)
R369	1-219-611-21	s	RESISTOR, CHIP 0.047 1W
R400	1-218-871-11	s	RESISTOR,CHIP 10K 1/10W (1608)
R401	1-218-879-11	s	RESISTOR,CHIP 22K 1/10W (1608)
R402	1-218-899-11	s	RESISTOR,CHIP 150K 1/10W(1608)
R403	1-218-871-11	s	RESISTOR,CHIP 10K 1/10W (1608)
R405	1-218-871-11	s	RESISTOR,CHIP 10K 1/10W (1608)
R407	1-218-879-11	s	RESISTOR,CHIP 22K 1/10W (1608)
R408	1-218-875-11	s	RESISTOR,CHIP 15K 1/10W (1608)
R409	1-218-879-11	s	RESISTOR,CHIP 22K 1/10W (1608)
R410	1-218-857-11	s	RESISTOR,CHIP 2.7K 1/10W(1608)
R411	1-218-863-11	s	RESISTOR,CHIP 4.7K 1/10W(1608)
R412	1-218-839-11	s	RESISTOR,CHIP 470 1/10W (1608)
R413	1-218-879-11	s	RESISTOR,CHIP 22K 1/10W (1608)
R415	1-218-879-11	s	RESISTOR,CHIP 22K 1/10W (1608)
R416	1-218-875-11	s	RESISTOR,CHIP 15K 1/10W (1608)
R417	1-218-875-11	s	RESISTOR,CHIP 15K 1/10W (1608)
R418	1-219-706-11	s	RESISTOR, CHIP 0.10/1W
R422	1-218-907-11	s	RESISTOR,CHIP 330K 1/10W(1608)
R423	1-218-863-11	s	RESISTOR,CHIP 4.7K 1/10W(1608)
R424	1-218-879-11	s	RESISTOR,CHIP 22K 1/10W (1608)
R425	1-218-907-11	s	RESISTOR,CHIP 330K 1/10W(1608)
R426	1-218-881-11	s	RESISTOR, CHIP 27K 1/10W(1608)
R427	1-218-879-11	s	RESISTOR,CHIP 22K 1/10W (1608)
R428	1-218-881-11	s	RESISTOR, CHIP 27K 1/10W(1608)
R429	1-218-847-11	s	RESISTOR, CHIP 1K 1/10W (1608)

(DR-508 BOARD)

Ref. No. or Q'ty	Part No.	SP	Description
R500	1-218-871-11	s	RESISTOR,CHIP 10K 1/10W (1608)
R501	1-218-871-11	s	RESISTOR,CHIP 10K 1/10W (1608)
R502	1-218-855-11	s	RESISTOR,CHIP 2.2K 1/10W(1608)
R503	1-218-855-11	s	RESISTOR,CHIP 2.2K 1/10W(1608)
R504	1-218-871-11	s	RESISTOR,CHIP 10K 1/10W (1608)
R505	1-218-871-11	s	RESISTOR,CHIP 10K 1/10W (1608)
R506	1-218-871-11	s	RESISTOR,CHIP 10K 1/10W (1608)
R507	1-218-871-11	s	RESISTOR,CHIP 10K 1/10W (1608)
R508	1-218-871-11	s	RESISTOR,CHIP 10K 1/10W (1608)
R509	1-218-871-11	s	RESISTOR,CHIP 10K 1/10W (1608)
R510	1-218-871-11	s	RESISTOR,CHIP 10K 1/10W (1608)
R511	1-218-871-11	s	RESISTOR,CHIP 10K 1/10W (1608)
R512	1-218-879-11	s	RESISTOR,CHIP 22K 1/10W (1608)
R513	1-218-871-11	s	RESISTOR,CHIP 10K 1/10W (1608)
R514	1-218-879-11	s	RESISTOR,CHIP 22K 1/10W (1608)
R515	1-218-903-11	s	RESISTOR,CHIP 220K 1/10W(1608)
R516	1-218-903-11	s	RESISTOR,CHIP 220K 1/10W(1608)
R517	1-218-871-11	s	RESISTOR,CHIP 10K 1/10W (1608)
R518	1-218-879-11	s	RESISTOR,CHIP 22K 1/10W (1608)
R519	1-218-903-11	s	RESISTOR,CHIP 220K 1/10W(1608)
R520	1-218-903-11	s	RESISTOR,CHIP 220K 1/10W(1608)
R521	1-218-879-11	s	RESISTOR,CHIP 22K 1/10W (1608)
R522	1-218-871-11	s	RESISTOR,CHIP 10K 1/10W (1608)
R523	1-218-871-11	s	RESISTOR,CHIP 10K 1/10W (1608)
R524	1-218-871-11	s	RESISTOR,CHIP 10K 1/10W (1608)
R525	1-218-871-11	s	RESISTOR,CHIP 10K 1/10W (1608)
R526	1-218-857-11	s	RESISTOR,CHIP 2.7K 1/10W(1608)
R527	1-218-871-11	s	RESISTOR,CHIP 10K 1/10W (1608)
R528	1-218-871-11	s	RESISTOR,CHIP 10K 1/10W (1608)
R529	1-219-706-11	s	RESISTOR, CHIP 0.10/1W
R530	1-219-706-11	s	RESISTOR, CHIP 0.10/1W
R531	1-219-706-11	s	RESISTOR, CHIP 0.10/1W
R532	1-218-871-11	s	RESISTOR,CHIP 10K 1/10W (1608)
R534	1-218-831-11	s	RESISTOR, CHIP 220 1/10W(1608)
R535	1-218-903-11	s	RESISTOR,CHIP 220K 1/10W(1608)
R536	1-218-891-11	s	RESISTOR,CHIP 68K 1/10W (1608)
R541	1-218-903-11	s	RESISTOR,CHIP 220K 1/10W(1608)
R542	1-218-891-11	s	RESISTOR,CHIP 68K 1/10W (1608)
R547	1-218-887-11	s	RESISTOR,CHIP 47K 1/10W (1608)
R548	1-218-887-11	s	RESISTOR,CHIP 47K 1/10W (1608)
R549	1-218-887-11	s	RESISTOR,CHIP 47K 1/10W (1608)
R550	1-218-887-11	s	RESISTOR,CHIP 47K 1/10W (1608)
R551	1-218-887-11	s	RESISTOR,CHIP 47K 1/10W (1608)
R552	1-218-887-11	s	RESISTOR,CHIP 47K 1/10W (1608)
R553	1-218-887-11	s	RESISTOR,CHIP 47K 1/10W (1608)
R554	1-218-887-11	s	RESISTOR,CHIP 47K 1/10W (1608)
R571	1-218-863-11	s	RESISTOR,CHIP 4.7K 1/10W(1608)
R600	1-218-895-11	s	RESISTOR,CHIP 100K 1/10W(1608)
R601	1-218-895-11	s	RESISTOR,CHIP 100K 1/10W(1608)
R602	1-218-855-11	s	RESISTOR,CHIP 2.2K 1/10W(1608)
R603	1-218-887-11	s	RESISTOR,CHIP 47K 1/10W (1608)
R604	1-218-887-11	s	RESISTOR,CHIP 47K 1/10W (1608)
R605	1-218-887-11	s	RESISTOR,CHIP 47K 1/10W (1608)
R606	1-218-887-11	s	RESISTOR,CHIP 47K 1/10W (1608)
R607	1-218-863-11	s	RESISTOR,CHIP 4.7K 1/10W(1608)
R608	1-218-883-11	s	RESISTOR,CHIP 33K 1/10W (1608)
R609	1-218-883-11	s	RESISTOR,CHIP 33K 1/10W (1608)
R610	1-218-863-11	s	RESISTOR,CHIP 4.7K 1/10W(1608)
R611	1-218-863-11	s	RESISTOR,CHIP 4.7K 1/10W(1608)

(DR-508 BOARD)

Ref. No. or Q'ty	Part No.	SP	Description
R613	1-218-842-11	s	RESISTOR,CHIP 620 1/10W (1608)
R616	1-218-891-11	s	RESISTOR,CHIP 68K 1/10W (1608)
R617	1-218-891-11	s	RESISTOR,CHIP 68K 1/10W (1608)
R620	1-218-895-11	s	RESISTOR,CHIP 100K 1/10W(1608)
R621	1-216-857-11	s	RESISTOR,CHIP 1M 1/10W(1608)
R622	1-218-861-11	s	RESISTOR,CHIP 3.9K 1/10W(1608)
R627	1-218-895-11	s	RESISTOR,CHIP 100K 1/10W(1608)
R632	1-218-859-11	s	RESISTOR,CHIP 3.3K 1/10W(1608)
R635	1-218-869-11	s	RESISTOR,CHIP 8.2K 1/10W(1608)
R636	1-218-899-11	s	RESISTOR,CHIP 150K 1/10W(1608)
R637	1-218-883-11	s	RESISTOR,CHIP 33K 1/10W (1608)
R638	1-218-883-11	s	RESISTOR,CHIP 33K 1/10W (1608)
R640	1-218-859-11	s	RESISTOR,CHIP 3.3K 1/10W(1608)
R641	1-218-903-11	s	RESISTOR,CHIP 220K 1/10W(1608)
R642	1-218-903-11	s	RESISTOR,CHIP 220K 1/10W(1608)
R644	1-218-847-11	s	RESISTOR, CHIP 1K 1/10W (1608)
R645	1-218-861-11	s	RESISTOR,CHIP 3.9K 1/10W(1608)
R646	1-218-851-11	s	RESISTOR,CHIP 1.5K 1/10W(1608)
R647	1-218-863-11	s	RESISTOR,CHIP 4.7K 1/10W(1608)
R648	1-218-871-11	s	RESISTOR,CHIP 10K 1/10W (1608)
R649	1-218-855-11	s	RESISTOR,CHIP 2.2K 1/10W(1608)
R650	1-218-871-11	s	RESISTOR,CHIP 10K 1/10W (1608)
R651	1-218-871-11	s	RESISTOR,CHIP 10K 1/10W (1608)
R652	1-218-859-11	s	RESISTOR,CHIP 3.3K 1/10W(1608)
R653	1-218-891-11	s	RESISTOR,CHIP 68K 1/10W (1608)
R654	1-220-800-91	s	RESISTOR, CHIP 1.5M (1608)
R655	1-218-895-11	s	RESISTOR,CHIP 100K 1/10W(1608)
R656	1-218-869-11	s	RESISTOR,CHIP 8.2K 1/10W(1608)
R657	1-216-857-11	s	RESISTOR,CHIP 1M 1/10W(1608)
R658	1-218-869-11	s	RESISTOR,CHIP 8.2K 1/10W(1608)
R659	1-218-895-11	s	RESISTOR,CHIP 100K 1/10W(1608)
R660	1-218-893-11	s	RESISTOR, CHIP 82K 1/10W(1608)
R661	1-218-863-11	s	RESISTOR,CHIP 4.7K 1/10W(1608)
R663	1-218-871-11	s	RESISTOR,CHIP 10K 1/10W (1608)
R664	1-218-871-11	s	RESISTOR,CHIP 10K 1/10W (1608)
R666	1-218-885-11	s	RESISTOR,CHIP 39K 1/10W (1608)
R667	1-218-887-11	s	RESISTOR,CHIP 47K 1/10W (1608)
R668	1-218-871-11	s	RESISTOR,CHIP 10K 1/10W (1608)
R669	1-218-871-11	s	RESISTOR,CHIP 10K 1/10W (1608)
R670	1-218-871-11	s	RESISTOR,CHIP 10K 1/10W (1608)
R671	1-218-871-11	s	RESISTOR,CHIP 10K 1/10W (1608)
R672	1-219-570-11	s	RESISTOR,CHIP 10M 1/16W
R673	1-219-570-11	s	RESISTOR,CHIP 10M 1/16W
R674	1-218-887-11	s	RESISTOR,CHIP 47K 1/10W (1608)
R676	1-216-864-11	s	CONDUCTOR, CHIP (1608)
R700	1-218-853-11	s	RESISTOR,CHIP 1.8K 1/10W(1608)
R701	1-218-899-11	s	RESISTOR,CHIP 150K 1/10W(1608)
R702	1-218-899-11	s	RESISTOR,CHIP 150K 1/10W(1608)
R703	1-218-899-11	s	RESISTOR,CHIP 150K 1/10W(1608)
R704	1-218-887-11	s	RESISTOR,CHIP 47K 1/10W (1608)
R705	1-218-863-11	s	RESISTOR,CHIP 4.7K 1/10W(1608)
R706	1-218-871-11	s	RESISTOR,CHIP 10K 1/10W (1608)
R707	1-218-863-11	s	RESISTOR,CHIP 4.7K 1/10W(1608)
R708	1-218-885-11	s	RESISTOR,CHIP 39K 1/10W (1608)
R709	1-218-889-11	s	RESISTOR,CHIP 56K 1/10W(1608)
R710	1-218-879-11	s	RESISTOR,CHIP 22K 1/10W (1608)
R711	1-218-879-11	s	RESISTOR,CHIP 22K 1/10W (1608)
R712	1-218-875-11	s	RESISTOR,CHIP 15K 1/10W (1608)
R713	1-218-883-11	s	RESISTOR,CHIP 33K 1/10W (1608)

(DR-508 BOARD)

Ref. No. or Q'ty	Part No.	SP	Description
R714	1-218-871-11	s	RESISTOR,CHIP 10K 1/10W (1608)
R715	1-218-871-11	s	RESISTOR,CHIP 10K 1/10W (1608)
R716	1-218-879-11	s	RESISTOR,CHIP 22K 1/10W (1608)
R717	1-218-857-11	s	RESISTOR,CHIP 2.7K 1/10W(1608)
R718	1-218-871-11	s	RESISTOR,CHIP 10K 1/10W (1608)
R719	1-218-871-11	s	RESISTOR,CHIP 10K 1/10W (1608)
R720	1-218-871-11	s	RESISTOR,CHIP 10K 1/10W (1608)
R721	1-218-879-11	s	RESISTOR,CHIP 22K 1/10W (1608)
R722	1-218-839-11	s	RESISTOR,CHIP 470 1/10W (1608)
R723	1-218-839-11	s	RESISTOR,CHIP 470 1/10W (1608)
R724	1-219-706-11	s	RESISTOR, CHIP 0.10/1W
R725	1-218-903-11	s	RESISTOR,CHIP 220K 1/10W(1608)
R726	1-218-891-11	s	RESISTOR,CHIP 68K 1/10W (1608)
R727	1-218-879-11	s	RESISTOR,CHIP 22K 1/10W (1608)
R728	1-218-887-11	s	RESISTOR,CHIP 47K 1/10W (1608)
R729	1-218-883-11	s	RESISTOR,CHIP 33K 1/10W (1608)
R730	1-218-887-11	s	RESISTOR,CHIP 47K 1/10W (1608)
R731	1-218-863-11	s	RESISTOR,CHIP 4.7K 1/10W(1608)
R732	1-218-863-11	s	RESISTOR,CHIP 4.7K 1/10W(1608)
R733	1-218-863-11	s	RESISTOR,CHIP 4.7K 1/10W(1608)
R734	1-218-863-11	s	RESISTOR,CHIP 4.7K 1/10W(1608)
R735	1-218-859-11	s	RESISTOR,CHIP 3.3K 1/10W(1608)
R736	1-218-859-11	s	RESISTOR,CHIP 3.3K 1/10W(1608)
R737	1-218-871-11	s	RESISTOR,CHIP 10K 1/10W (1608)
R738	1-218-868-11	s	RESISTOR,CHIP 7.5K 1/10W(1608)
R739	1-218-903-11	s	RESISTOR,CHIP 220K 1/10W(1608)
R740	1-218-903-11	s	RESISTOR,CHIP 220K 1/10W(1608)
R742	1-218-885-11	s	RESISTOR,CHIP 39K 1/10W (1608)
R744	1-218-873-11	s	RESISTOR,CHIP 12K 1/10W (1608)
R745	1-218-883-11	s	RESISTOR,CHIP 33K 1/10W (1608)
R746	1-216-864-11	s	CONDUCTOR, CHIP (1608)
R747	1-218-871-11	s	RESISTOR,CHIP 10K 1/10W (1608)
R748	1-218-855-11	s	RESISTOR,CHIP 2.2K 1/10W(1608)
R751	1-216-864-11	s	CONDUCTOR, CHIP (1608)
R752	1-218-855-11	s	RESISTOR,CHIP 2.2K 1/10W(1608)
R753	1-218-855-11	s	RESISTOR,CHIP 2.2K 1/10W(1608)
R754	1-216-864-11	s	CONDUCTOR, CHIP (1608)
R756	1-218-871-11	s	RESISTOR,CHIP 10K 1/10W (1608)
R757	1-218-871-11	s	RESISTOR,CHIP 10K 1/10W (1608)
R759	1-216-864-11	s	CONDUCTOR, CHIP (1608)
R760	1-218-823-11	s	RESISTOR,CHIP 100 1/10W (1608)
R763	1-218-871-11	s	RESISTOR,CHIP 10K 1/10W (1608)
R766	1-218-883-11	s	RESISTOR,CHIP 33K 1/10W (1608)
R768	1-218-847-11	s	RESISTOR, CHIP 1K 1/10W (1608)
R769	1-218-847-11	s	RESISTOR, CHIP 1K 1/10W (1608)
R770	1-218-847-11	s	RESISTOR, CHIP 1K 1/10W (1608)
R771	1-218-831-11	s	RESISTOR, CHIP 220 1/10W(1608)
R772	1-218-831-11	s	RESISTOR, CHIP 220 1/10W(1608)
R773	1-218-823-11	s	RESISTOR,CHIP 100 1/10W (1608)
R774	1-218-823-11	s	RESISTOR,CHIP 100 1/10W (1608)
R775	1-218-232-91	s	RESISTOR CHIP 4.7 1/2W (4532)
R776	1-218-232-91	s	RESISTOR CHIP 4.7 1/2W (4532)
R777	1-218-614-11	s	RESISTOR CHIP 10/1W (5331)
R778	1-218-236-91	s	RESISTOR,CHIP 1 1/4W
R779	1-218-907-11	s	RESISTOR,CHIP 330K 1/10W(1608)
R780	1-218-863-11	s	RESISTOR,CHIP 4.7K 1/10W(1608)
R782	1-219-706-11	s	RESISTOR, CHIP 0.10/1W
R800	1-218-871-11	s	RESISTOR,CHIP 10K 1/10W (1608)
R801	1-218-879-11	s	RESISTOR,CHIP 22K 1/10W (1608)

(DR-508 BOARD)

Ref. No. or Q'ty	Part No.	SP	Description
R803	1-218-887-11	s	RESISTOR,CHIP 47K 1/10W (1608)
R804	1-218-887-11	s	RESISTOR,CHIP 47K 1/10W (1608)
R806	1-218-887-11	s	RESISTOR,CHIP 47K 1/10W (1608)
R808	1-218-887-11	s	RESISTOR,CHIP 47K 1/10W (1608)
R809	1-218-887-11	s	RESISTOR,CHIP 47K 1/10W (1608)
R810	1-218-863-11	s	RESISTOR,CHIP 4.7K 1/10W(1608)
R811	1-218-863-11	s	RESISTOR,CHIP 4.7K 1/10W(1608)
R812	1-218-887-11	s	RESISTOR,CHIP 47K 1/10W (1608)
R813	1-218-857-11	s	RESISTOR,CHIP 2.7K 1/10W(1608)
R814	1-218-903-11	s	RESISTOR,CHIP 220K 1/10W(1608)
R815	1-218-862-11	s	RESISTOR,CHIP 4.3K 1/10W(1608)
R816	1-218-843-11	s	RESISTOR,CHIP 680 1/10W (1608)
R817	1-218-863-11	s	RESISTOR,CHIP 4.7K 1/10W(1608)
R818	1-218-887-11	s	RESISTOR,CHIP 47K 1/10W (1608)
R819	1-218-863-11	s	RESISTOR,CHIP 4.7K 1/10W(1608)
R820	1-218-863-11	s	RESISTOR,CHIP 4.7K 1/10W(1608)
R821	1-218-863-11	s	RESISTOR,CHIP 4.7K 1/10W(1608)
R822	1-218-863-11	s	RESISTOR,CHIP 4.7K 1/10W(1608)
R823	1-211-969-11	s	RESISTOR,CHIP 10 1/10W (1608)
R824	1-218-871-11	s	RESISTOR,CHIP 10K 1/10W (1608)
R825	1-218-855-11	s	RESISTOR,CHIP 2.2K 1/10W(1608)
R826	1-218-855-11	s	RESISTOR,CHIP 2.2K 1/10W(1608)
R829	1-218-899-11	s	RESISTOR,CHIP 150K 1/10W(1608)
R830	1-218-881-11	s	RESISTOR, CHIP 27K 1/10W(1608)
R831	1-218-895-11	s	RESISTOR,CHIP 100K 1/10W(1608)
R832	1-218-863-11	s	RESISTOR,CHIP 4.7K 1/10W(1608)
R833	1-218-863-11	s	RESISTOR,CHIP 4.7K 1/10W(1608)
R834	1-218-855-11	s	RESISTOR,CHIP 2.2K 1/10W(1608)
R835	1-218-855-11	s	RESISTOR,CHIP 2.2K 1/10W(1608)
R836	1-218-895-11	s	RESISTOR,CHIP 100K 1/10W(1608)
R837	1-218-881-11	s	RESISTOR, CHIP 27K 1/10W(1608)
R838	1-218-881-11	s	RESISTOR, CHIP 27K 1/10W(1608)
R839	1-219-706-11	s	RESISTOR, CHIP 0.10/1W
R845	1-218-863-11	s	RESISTOR,CHIP 4.7K 1/10W(1608)
R848	1-218-863-11	s	RESISTOR,CHIP 4.7K 1/10W(1608)
R849	1-218-831-11	s	RESISTOR, CHIP 220 1/10W(1608)
R850	1-218-863-11	s	RESISTOR,CHIP 4.7K 1/10W(1608)
R851	1-218-863-11	s	RESISTOR,CHIP 4.7K 1/10W(1608)
R888	1-218-889-11	s	RESISTOR,CHIP 56K 1/10W(1608)
R889	1-218-841-11	s	RESISTOR,CHIP 560 1/10W (1608)
R890	1-218-841-11	s	RESISTOR,CHIP 560 1/10W (1608)
R891	1-218-841-11	s	RESISTOR,CHIP 560 1/10W (1608)
R892	1-218-841-11	s	RESISTOR,CHIP 560 1/10W (1608)
R893	1-218-863-11	s	RESISTOR,CHIP 4.7K 1/10W(1608)
R894	1-218-863-11	s	RESISTOR,CHIP 4.7K 1/10W(1608)
R900	1-218-881-11	s	RESISTOR, CHIP 27K 1/10W(1608)
R901	1-218-851-11	s	RESISTOR,CHIP 1.5K 1/10W(1608)
R902	1-218-889-11	s	RESISTOR,CHIP 56K 1/10W(1608)
R903	1-218-879-11	s	RESISTOR,CHIP 22K 1/10W (1608)
R904	1-218-879-11	s	RESISTOR,CHIP 22K 1/10W (1608)
R905	1-218-875-11	s	RESISTOR,CHIP 15K 1/10W (1608)
R906	1-218-907-11	s	RESISTOR,CHIP 330K 1/10W(1608)
R907	1-218-863-11	s	RESISTOR,CHIP 4.7K 1/10W(1608)
R908	1-218-857-11	s	RESISTOR,CHIP 2.7K 1/10W(1608)
R909	1-218-871-11	s	RESISTOR,CHIP 10K 1/10W (1608)
R911	1-218-839-11	s	RESISTOR,CHIP 470 1/10W (1608)
R912	1-219-706-11	s	RESISTOR, CHIP 0.10/1W
R913	1-219-706-11	s	RESISTOR, CHIP 0.10/1W
R916	1-218-899-11	s	RESISTOR,CHIP 150K 1/10W(1608)

(DR-508 BOARD)

Ref. No. or Q'ty	Part No.	SP	Description
R917	1-218-899-11	s	RESISTOR,CHIP 150K 1/10W(1608)
R918	1-218-899-11	s	RESISTOR,CHIP 150K 1/10W(1608)
R919	1-218-863-11	s	RESISTOR,CHIP 4.7K 1/10W(1608)
R920	1-218-885-11	s	RESISTOR,CHIP 39K 1/10W (1608)
R921	1-218-883-11	s	RESISTOR,CHIP 33K 1/10W (1608)
R922	1-218-871-11	s	RESISTOR,CHIP 10K 1/10W (1608)
R923	1-218-871-11	s	RESISTOR,CHIP 10K 1/10W (1608)
R924	1-218-883-11	s	RESISTOR,CHIP 33K 1/10W (1608)
R925	1-218-879-11	s	RESISTOR,CHIP 22K 1/10W (1608)
R926	1-218-871-11	s	RESISTOR,CHIP 10K 1/10W (1608)
R927	1-218-871-11	s	RESISTOR,CHIP 10K 1/10W (1608)
R928	1-218-879-11	s	RESISTOR,CHIP 22K 1/10W (1608)
R938	1-218-871-11	s	RESISTOR,CHIP 10K 1/10W (1608)
R939	1-218-871-11	s	RESISTOR,CHIP 10K 1/10W (1608)
R1000	1-218-871-11	s	RESISTOR,CHIP 10K 1/10W (1608)
R1001	1-218-879-11	s	RESISTOR,CHIP 22K 1/10W (1608)
R1003	1-218-887-11	s	RESISTOR,CHIP 47K 1/10W (1608)
R1004	1-218-887-11	s	RESISTOR,CHIP 47K 1/10W (1608)
R1006	1-218-887-11	s	RESISTOR,CHIP 47K 1/10W (1608)
R1008	1-218-887-11	s	RESISTOR,CHIP 47K 1/10W (1608)
R1009	1-218-887-11	s	RESISTOR,CHIP 47K 1/10W (1608)
R1010	1-218-863-11	s	RESISTOR,CHIP 4.7K 1/10W(1608)
R1011	1-218-863-11	s	RESISTOR,CHIP 4.7K 1/10W(1608)
R1012	1-218-887-11	s	RESISTOR,CHIP 47K 1/10W (1608)
R1013	1-218-857-11	s	RESISTOR,CHIP 2.7K 1/10W(1608)
R1014	1-218-903-11	s	RESISTOR,CHIP 220K 1/10W(1608)
R1015	1-218-862-11	s	RESISTOR,CHIP 4.3K 1/10W(1608)
R1016	1-218-843-11	s	RESISTOR,CHIP 680 1/10W (1608)
R1017	1-218-863-11	s	RESISTOR,CHIP 4.7K 1/10W(1608)
R1018	1-218-887-11	s	RESISTOR,CHIP 47K 1/10W (1608)
R1019	1-218-863-11	s	RESISTOR,CHIP 4.7K 1/10W(1608)
R1020	1-218-863-11	s	RESISTOR,CHIP 4.7K 1/10W(1608)
R1021	1-218-863-11	s	RESISTOR,CHIP 4.7K 1/10W(1608)
R1022	1-218-863-11	s	RESISTOR,CHIP 4.7K 1/10W(1608)
R1023	1-211-969-11	s	RESISTOR,CHIP 10 1/10W (1608)
R1024	1-218-871-11	s	RESISTOR,CHIP 10K 1/10W (1608)
R1025	1-218-855-11	s	RESISTOR,CHIP 2.2K 1/10W(1608)
R1026	1-218-855-11	s	RESISTOR,CHIP 2.2K 1/10W(1608)
R1027	1-218-899-11	s	RESISTOR,CHIP 150K 1/10W(1608)
R1030	1-218-881-11	s	RESISTOR, CHIP 27K 1/10W(1608)
R1031	1-218-895-11	s	RESISTOR,CHIP 100K 1/10W(1608)
R1032	1-218-863-11	s	RESISTOR,CHIP 4.7K 1/10W(1608)
R1033	1-218-863-11	s	RESISTOR,CHIP 4.7K 1/10W(1608)
R1034	1-218-855-11	s	RESISTOR,CHIP 2.2K 1/10W(1608)
R1035	1-218-855-11	s	RESISTOR,CHIP 2.2K 1/10W(1608)
R1036	1-218-895-11	s	RESISTOR,CHIP 100K 1/10W(1608)
R1037	1-218-881-11	s	RESISTOR, CHIP 27K 1/10W(1608)
R1038	1-218-881-11	s	RESISTOR, CHIP 27K 1/10W(1608)
R1039	1-219-706-11	s	RESISTOR, CHIP 0.10/1W
R1040	1-218-903-11	s	RESISTOR,CHIP 220K 1/10W(1608)
R1041	1-218-891-11	s	RESISTOR,CHIP 68K 1/10W (1608)
R1042	1-218-903-11	s	RESISTOR,CHIP 220K 1/10W(1608)
R1043	1-218-891-11	s	RESISTOR,CHIP 68K 1/10W (1608)
R1045	1-218-863-11	s	RESISTOR,CHIP 4.7K 1/10W(1608)
R1048	1-218-863-11	s	RESISTOR,CHIP 4.7K 1/10W(1608)
R1049	1-218-831-11	s	RESISTOR, CHIP 220 1/10W(1608)
R1050	1-218-863-11	s	RESISTOR,CHIP 4.7K 1/10W(1608)
R1051	1-218-863-11	s	RESISTOR,CHIP 4.7K 1/10W(1608)
R1089	1-218-841-11	s	RESISTOR,CHIP 560 1/10W (1608)

(DR-508 BOARD)

Ref. No. or Q'ty	Part No.	SP	Description
R1090	1-218-841-11	s	RESISTOR,CHIP 560 1/10W (1608)
R1091	1-218-841-11	s	RESISTOR,CHIP 560 1/10W (1608)
R1092	1-218-841-11	s	RESISTOR,CHIP 560 1/10W (1608)
R1093	1-218-863-11	s	RESISTOR,CHIP 4.7K 1/10W(1608)
R1094	1-218-863-11	s	RESISTOR,CHIP 4.7K 1/10W(1608)
R1095	1-218-888-11	s	RESISTOR,CHIP 51K 1/10W (1608)
R1096	1-218-888-11	s	RESISTOR,CHIP 51K 1/10W (1608)
RB101	1-233-414-11	s	RESISTOR,CHIP NETWORK 4.7K
RB102	1-236-908-11	s	RESISTOR,NETWORK 10K (3216)
RB200	1-233-578-11	s	RESISTOR,CHIP NETWORK 47K
RB201	1-233-578-11	s	RESISTOR,CHIP NETWORK 47K
RB202	1-233-578-11	s	RESISTOR,CHIP NETWORK 47K
RB203	1-233-578-11	s	RESISTOR,CHIP NETWORK 47K
RB204	1-233-414-11	s	RESISTOR,CHIP NETWORK 4.7K
RB205	1-233-412-11	s	RESISTOR,CHIP NETWORK 1K
RB206	1-233-412-11	s	RESISTOR,CHIP NETWORK 1K
RB207	1-233-412-11	s	RESISTOR,CHIP NETWORK 1K
RB208	1-233-412-11	s	RESISTOR,CHIP NETWORK 1K
RB209	1-233-412-11	s	RESISTOR,CHIP NETWORK 1K
RB210	1-233-412-11	s	RESISTOR,CHIP NETWORK 1K
RB211	1-233-412-11	s	RESISTOR,CHIP NETWORK 1K
RB212	1-233-412-11	s	RESISTOR,CHIP NETWORK 1K
X100	1-795-816-22	s	OSCILLATOR, CRYSTAL (SMD)

DSP-109 BOARD

[Lot No. 495 -] MSW-M2000E/P, M2100E/P
BKMW-E3000

Ref. No. or Q'ty	Part No.	SP	Description
1pc	A-1070-138-A	s	MOUNTED CIRCUIT BOARD, DSP-109
C5	1-131-661-11	s	CAPACITOR,ELECT 100MF/10V CHIP
C7	1-107-826-11	s	CAPACITOR,CHIP CERAMIC 0.1MF
C8	1-131-661-11	s	CAPACITOR,ELECT 100MF/10V CHIP
C9	1-107-826-11	s	CAPACITOR,CHIP CERAMIC 0.1MF
C10	1-107-826-11	s	CAPACITOR,CHIP CERAMIC 0.1MF
C11	1-107-826-11	s	CAPACITOR,CHIP CERAMIC 0.1MF
C13	1-107-826-11	s	CAPACITOR,CHIP CERAMIC 0.1MF
C14	1-107-826-11	s	CAPACITOR,CHIP CERAMIC 0.1MF
C15	1-107-826-11	s	CAPACITOR,CHIP CERAMIC 0.1MF
C107	1-125-777-11	s	CAPACITOR CERAMIC 0.1MF/10V
C108	1-125-777-11	s	CAPACITOR CERAMIC 0.1MF/10V
C109	1-125-777-11	s	CAPACITOR CERAMIC 0.1MF/10V
C110	1-125-777-11	s	CAPACITOR CERAMIC 0.1MF/10V
C111	1-125-777-11	s	CAPACITOR CERAMIC 0.1MF/10V
C112	1-125-777-11	s	CAPACITOR CERAMIC 0.1MF/10V
C113	1-125-777-11	s	CAPACITOR CERAMIC 0.1MF/10V
C114	1-125-777-11	s	CAPACITOR CERAMIC 0.1MF/10V
C115	1-165-989-11	s	CAPACITOR, CERAMIC 10MF (2012)
C116	1-165-989-11	s	CAPACITOR, CERAMIC 10MF (2012)
C117	1-165-989-11	s	CAPACITOR, CERAMIC 10MF (2012)
C118	1-165-989-11	s	CAPACITOR, CERAMIC 10MF (2012)
C119	1-125-777-11	s	CAPACITOR CERAMIC 0.1MF/10V
C120	1-125-777-11	s	CAPACITOR CERAMIC 0.1MF/10V
C121	1-125-777-11	s	CAPACITOR CERAMIC 0.1MF/10V
C122	1-125-777-11	s	CAPACITOR CERAMIC 0.1MF/10V
C123	1-125-777-11	s	CAPACITOR CERAMIC 0.1MF/10V
C124	1-125-777-11	s	CAPACITOR CERAMIC 0.1MF/10V
C125	1-125-777-11	s	CAPACITOR CERAMIC 0.1MF/10V
C126	1-125-777-11	s	CAPACITOR CERAMIC 0.1MF/10V
C127	1-125-777-11	s	CAPACITOR CERAMIC 0.1MF/10V
C128	1-125-777-11	s	CAPACITOR CERAMIC 0.1MF/10V
C129	1-125-777-11	s	CAPACITOR CERAMIC 0.1MF/10V
C130	1-125-777-11	s	CAPACITOR CERAMIC 0.1MF/10V
C131	1-125-777-11	s	CAPACITOR CERAMIC 0.1MF/10V
C132	1-125-777-11	s	CAPACITOR CERAMIC 0.1MF/10V
C133	1-125-777-11	s	CAPACITOR CERAMIC 0.1MF/10V
C134	1-125-777-11	s	CAPACITOR CERAMIC 0.1MF/10V
C135	1-125-777-11	s	CAPACITOR CERAMIC 0.1MF/10V
C136	1-125-777-11	s	CAPACITOR CERAMIC 0.1MF/10V
C137	1-125-777-11	s	CAPACITOR CERAMIC 0.1MF/10V
C138	1-125-777-11	s	CAPACITOR CERAMIC 0.1MF/10V
C139	1-125-777-11	s	CAPACITOR CERAMIC 0.1MF/10V
C140	1-125-777-11	s	CAPACITOR CERAMIC 0.1MF/10V
C141	1-125-777-11	s	CAPACITOR CERAMIC 0.1MF/10V
C142	1-125-777-11	s	CAPACITOR CERAMIC 0.1MF/10V
C143	1-125-777-11	s	CAPACITOR CERAMIC 0.1MF/10V
C144	1-125-777-11	s	CAPACITOR CERAMIC 0.1MF/10V
C145	1-125-777-11	s	CAPACITOR CERAMIC 0.1MF/10V
C146	1-125-777-11	s	CAPACITOR CERAMIC 0.1MF/10V
C147	1-125-777-11	s	CAPACITOR CERAMIC 0.1MF/10V
C148	1-125-777-11	s	CAPACITOR CERAMIC 0.1MF/10V
C149	1-125-777-11	s	CAPACITOR CERAMIC 0.1MF/10V
C150	1-125-777-11	s	CAPACITOR CERAMIC 0.1MF/10V
C151	1-125-777-11	s	CAPACITOR CERAMIC 0.1MF/10V
C152	1-125-777-11	s	CAPACITOR CERAMIC 0.1MF/10V
C153	1-125-777-11	s	CAPACITOR CERAMIC 0.1MF/10V
C154	1-125-777-11	s	CAPACITOR CERAMIC 0.1MF/10V

(DSP-109 BOARD)

Ref. No. or Q'ty	Part No.	SP	Description
C155	1-165-989-11	s	CAPACITOR, CERAMIC 10MF (2012)
C156	1-165-989-11	s	CAPACITOR, CERAMIC 10MF (2012)
C157	1-125-777-11	s	CAPACITOR CERAMIC 0.1MF/10V
C201	1-107-826-11	s	CAPACITOR,CHIP CERAMIC 0.1MF
C202	1-107-826-11	s	CAPACITOR,CHIP CERAMIC 0.1MF
C203	1-107-826-11	s	CAPACITOR,CHIP CERAMIC 0.1MF
C204	1-107-826-11	s	CAPACITOR,CHIP CERAMIC 0.1MF
C205	1-107-826-11	s	CAPACITOR,CHIP CERAMIC 0.1MF
C206	1-107-826-11	s	CAPACITOR,CHIP CERAMIC 0.1MF
C207	1-107-826-11	s	CAPACITOR,CHIP CERAMIC 0.1MF
C208	1-107-826-11	s	CAPACITOR,CHIP CERAMIC 0.1MF
C209	1-107-826-11	s	CAPACITOR,CHIP CERAMIC 0.1MF
C210	1-107-826-11	s	CAPACITOR,CHIP CERAMIC 0.1MF
C211	1-107-826-11	s	CAPACITOR,CHIP CERAMIC 0.1MF
C212	1-107-826-11	s	CAPACITOR,CHIP CERAMIC 0.1MF
C213	1-107-826-11	s	CAPACITOR,CHIP CERAMIC 0.1MF
C214	1-107-826-11	s	CAPACITOR,CHIP CERAMIC 0.1MF
C215	1-107-826-11	s	CAPACITOR,CHIP CERAMIC 0.1MF
C216	1-107-826-11	s	CAPACITOR,CHIP CERAMIC 0.1MF
C401	1-107-826-11	s	CAPACITOR,CHIP CERAMIC 0.1MF
C402	1-107-826-11	s	CAPACITOR,CHIP CERAMIC 0.1MF
C403	1-107-418-11	s	CAPACITOR,CHIP ELECT 10MF 35V
C404	1-107-826-11	s	CAPACITOR,CHIP CERAMIC 0.1MF
C405	1-107-826-11	s	CAPACITOR,CHIP CERAMIC 0.1MF
C406	1-107-826-11	s	CAPACITOR,CHIP CERAMIC 0.1MF
C407	1-107-826-11	s	CAPACITOR,CHIP CERAMIC 0.1MF
C408	1-107-826-11	s	CAPACITOR,CHIP CERAMIC 0.1MF
C409	1-107-826-11	s	CAPACITOR,CHIP CERAMIC 0.1MF
C410	1-107-826-11	s	CAPACITOR,CHIP CERAMIC 0.1MF
C411	1-107-826-11	s	CAPACITOR,CHIP CERAMIC 0.1MF
C412	1-107-826-11	s	CAPACITOR,CHIP CERAMIC 0.1MF
C413	1-125-777-11	s	CAPACITOR CERAMIC 0.1MF/10V
C414	1-125-777-11	s	CAPACITOR CERAMIC 0.1MF/10V
C415	1-125-777-11	s	CAPACITOR CERAMIC 0.1MF/10V
C416	1-125-777-11	s	CAPACITOR CERAMIC 0.1MF/10V
C417	1-125-777-11	s	CAPACITOR CERAMIC 0.1MF/10V
C418	1-125-777-11	s	CAPACITOR CERAMIC 0.1MF/10V
C419	1-125-777-11	s	CAPACITOR CERAMIC 0.1MF/10V
C420	1-125-777-11	s	CAPACITOR CERAMIC 0.1MF/10V
C421	1-125-777-11	s	CAPACITOR CERAMIC 0.1MF/10V
C422	1-125-777-11	s	CAPACITOR CERAMIC 0.1MF/10V
C423	1-125-777-11	s	CAPACITOR CERAMIC 0.1MF/10V
C424	1-125-777-11	s	CAPACITOR CERAMIC 0.1MF/10V
C425	1-125-777-11	s	CAPACITOR CERAMIC 0.1MF/10V
C426	1-125-777-11	s	CAPACITOR CERAMIC 0.1MF/10V
C427	1-125-777-11	s	CAPACITOR CERAMIC 0.1MF/10V
C428	1-125-777-11	s	CAPACITOR CERAMIC 0.1MF/10V
C429	1-125-777-11	s	CAPACITOR CERAMIC 0.1MF/10V
C430	1-125-777-11	s	CAPACITOR CERAMIC 0.1MF/10V
C431	1-125-777-11	s	CAPACITOR CERAMIC 0.1MF/10V
C432	1-125-777-11	s	CAPACITOR CERAMIC 0.1MF/10V
C433	1-125-777-11	s	CAPACITOR CERAMIC 0.1MF/10V
C434	1-125-777-11	s	CAPACITOR CERAMIC 0.1MF/10V
C435	1-125-777-11	s	CAPACITOR CERAMIC 0.1MF/10V
C436	1-125-777-11	s	CAPACITOR CERAMIC 0.1MF/10V
C437	1-125-777-11	s	CAPACITOR CERAMIC 0.1MF/10V
C438	1-125-777-11	s	CAPACITOR CERAMIC 0.1MF/10V
C440	1-125-777-11	s	CAPACITOR CERAMIC 0.1MF/10V
C441	1-125-777-11	s	CAPACITOR CERAMIC 0.1MF/10V

(DSP-109 BOARD)

Ref. No. or Q'ty	Part No.	SP	Description
C442	1-125-777-11	s	CAPACITOR CERAMIC 0.1MF/10V
C443	1-125-777-11	s	CAPACITOR CERAMIC 0.1MF/10V
C444	1-125-777-11	s	CAPACITOR CERAMIC 0.1MF/10V
C445	1-125-777-11	s	CAPACITOR CERAMIC 0.1MF/10V
C446	1-125-777-11	s	CAPACITOR CERAMIC 0.1MF/10V
C447	1-125-777-11	s	CAPACITOR CERAMIC 0.1MF/10V
C449	1-125-777-11	s	CAPACITOR CERAMIC 0.1MF/10V
C450	1-125-777-11	s	CAPACITOR CERAMIC 0.1MF/10V
C451	1-125-777-11	s	CAPACITOR CERAMIC 0.1MF/10V
C452	1-125-777-11	s	CAPACITOR CERAMIC 0.1MF/10V
C453	1-125-777-11	s	CAPACITOR CERAMIC 0.1MF/10V
C454	1-125-777-11	s	CAPACITOR CERAMIC 0.1MF/10V
C455	1-125-777-11	s	CAPACITOR CERAMIC 0.1MF/10V
C456	1-125-777-11	s	CAPACITOR CERAMIC 0.1MF/10V
C457	1-125-777-11	s	CAPACITOR CERAMIC 0.1MF/10V
C458	1-125-777-11	s	CAPACITOR CERAMIC 0.1MF/10V
C459	1-125-777-11	s	CAPACITOR CERAMIC 0.1MF/10V
C460	1-165-989-11	s	CAPACITOR, CERAMIC 10MF (2012)
C461	1-165-989-11	s	CAPACITOR, CERAMIC 10MF (2012)
C462	1-165-989-11	s	CAPACITOR, CERAMIC 10MF (2012)
C463	1-165-989-11	s	CAPACITOR, CERAMIC 10MF (2012)
CN6	1-815-958-11	s	CONNECTOR, BOARD TO BOARD 120P
CN401	1-764-099-11	s	PIN, CONNECTOR (PC BOARD) 14P
CN501	1-815-958-11	s	CONNECTOR, BOARD TO BOARD 120P
D1	8-719-064-41	s	DIODE CL-191Y-CD-T
D2	8-719-064-52	s	DIODE CL-191YG-CD-T
D3	8-719-071-10	s	DIODE CL-191HR-CD-T
D4	8-719-064-52	s	DIODE CL-191YG-CD-T
D5	8-719-064-41	s	DIODE CL-191Y-CD-T
D6	8-719-064-52	s	DIODE CL-191YG-CD-T
D7	8-719-071-10	s	DIODE CL-191HR-CD-T
D8	8-719-064-52	s	DIODE CL-191YG-CD-T
D101	8-719-064-52	s	DIODE CL-191YG-CD-T
D401	8-719-066-98	s	DIODE RB051L-40
E1	1-535-877-22	s	CHIP,CHECKER (TEST POINT)
E2	1-535-877-22	s	CHIP,CHECKER (TEST POINT)
E3	1-535-877-22	s	CHIP,CHECKER (TEST POINT)
E4	1-535-877-22	s	CHIP,CHECKER (TEST POINT)
FL401	1-233-327-11	s	FILTER, CHIP EMI
IC3	6-701-042-01	s	IC LT1963EQ-E2
IC4	8-759-573-97	s	IC SN74LVC541APWR
IC5	8-759-573-97	s	IC SN74LVC541APWR
IC6	6-706-484-01	s	IC TC7SH04FU(T5RSOYJF)
IC7	6-706-487-01	s	IC TC7SH08FU(T5RSOYJF)
IC15	8-759-523-78	s	IC TC74VHC00FT(EL)
IC101	8-759-540-36	s	IC SN74LVC157APWR
IC201	6-703-644-01	s	IC AD1895AYRSRL
IC202	6-703-644-01	s	IC AD1895AYRSRL
IC203	6-703-644-01	s	IC AD1895AYRSRL
IC204	6-703-644-01	s	IC AD1895AYRSRL
IC205	6-706-007-01	s	IC HY57V561620CTP-HDR
IC206	6-706-007-01	s	IC HY57V561620CTP-HDR
IC401	8-759-692-08	s	IC MBM29DL324BE-90PFTN
IC402	8-759-549-20	s	IC SN74LV541APWR
Q1	8-729-929-08	s	TRANSISTOR DTC123JE
Q401	8-729-928-73	s	TRANSISTOR DTA114TE-TL
Q402	8-729-928-73	s	TRANSISTOR DTA114TE-TL

(DSP-109 BOARD)

Ref. No. or Q'ty	Part No.	SP	Description
Q403	8-729-929-26	s	TRANSISTOR DTC114TE
Q404	8-729-929-26	s	TRANSISTOR DTC114TE
R21	1-216-825-11	s	RESISTOR,CHIP 2.2K 1/10W 1608
R22	1-216-829-11	s	RESISTOR,CHIP 4.7K 1/10W(1608)
R23	1-218-871-11	s	RESISTOR,CHIP 10K 1/10W (1608)
R25	1-216-797-11	s	RESISTOR,CHIP 10 1/10W 1608
R28	1-216-805-11	s	RESISTOR,CHIP 47 1/10W 1608
R29	1-216-833-11	s	RESISTOR,CHIP 10K 1/10W (1608)
R31	1-216-805-11	s	RESISTOR,CHIP 47 1/10W 1608
R32	1-216-805-11	s	RESISTOR,CHIP 47 1/10W 1608
R33	1-216-805-11	s	RESISTOR,CHIP 47 1/10W 1608
R34	1-216-805-11	s	RESISTOR,CHIP 47 1/10W 1608
R35	1-216-841-11	s	RESISTOR, CHIP 47K 1/10W 1608
R36	1-216-797-11	s	RESISTOR,CHIP 10 1/10W 1608
R37	1-216-797-11	s	RESISTOR,CHIP 10 1/10W 1608
R38	1-216-797-11	s	RESISTOR,CHIP 10 1/10W 1608
R41	1-216-797-11	s	RESISTOR,CHIP 10 1/10W 1608
R42	1-216-797-11	s	RESISTOR,CHIP 10 1/10W 1608
R44	1-216-797-11	s	RESISTOR,CHIP 10 1/10W 1608
R45	1-216-797-11	s	RESISTOR,CHIP 10 1/10W 1608
R47	1-216-821-11	s	RESISTOR,CHIP 1.0K 1/10W(1608)
R49	1-216-797-11	s	RESISTOR,CHIP 10 1/10W 1608
R50	1-216-797-11	s	RESISTOR,CHIP 10 1/10W 1608
R51	1-216-797-11	s	RESISTOR,CHIP 10 1/10W 1608
R52	1-216-797-11	s	RESISTOR,CHIP 10 1/10W 1608
R101	1-216-829-11	s	RESISTOR,CHIP 4.7K 1/10W(1608)
R104	1-216-829-11	s	RESISTOR,CHIP 4.7K 1/10W(1608)
R106	1-216-829-11	s	RESISTOR,CHIP 4.7K 1/10W(1608)
R107	1-216-829-11	s	RESISTOR,CHIP 4.7K 1/10W(1608)
R113	1-218-835-11	s	RESISTOR,CHIP 330 1/10W (1608)
R122	1-216-797-11	s	RESISTOR,CHIP 10 1/10W 1608
R124	1-216-797-11	s	RESISTOR,CHIP 10 1/10W 1608
R126	1-216-797-11	s	RESISTOR,CHIP 10 1/10W 1608
R127	1-216-829-11	s	RESISTOR,CHIP 4.7K 1/10W(1608)
R129	1-216-829-11	s	RESISTOR,CHIP 4.7K 1/10W(1608)
R130	1-216-829-11	s	RESISTOR,CHIP 4.7K 1/10W(1608)
R131	1-216-829-11	s	RESISTOR,CHIP 4.7K 1/10W(1608)
R210	1-216-797-11	s	RESISTOR,CHIP 10 1/10W 1608
R211	1-216-797-11	s	RESISTOR,CHIP 10 1/10W 1608
R212	1-216-801-11	s	RESISTOR,CHIP 22 1/10W (1608)
R213	1-216-797-11	s	RESISTOR,CHIP 10 1/10W 1608
R214	1-216-797-11	s	RESISTOR,CHIP 10 1/10W 1608
R215	1-216-797-11	s	RESISTOR,CHIP 10 1/10W 1608
R216	1-216-797-11	s	RESISTOR,CHIP 10 1/10W 1608
R218	1-216-797-11	s	RESISTOR,CHIP 10 1/10W 1608
R221	1-216-797-11	s	RESISTOR,CHIP 10 1/10W 1608
R222	1-216-797-11	s	RESISTOR,CHIP 10 1/10W 1608
R223	1-216-797-11	s	RESISTOR,CHIP 10 1/10W 1608
R224	1-216-797-11	s	RESISTOR,CHIP 10 1/10W 1608
R227	1-216-801-11	s	RESISTOR,CHIP 22 1/10W (1608)
R401	1-216-864-11	s	CONDUCTOR, CHIP (1608)
R402	1-216-845-11	s	RESISTOR,CHIP 100K 1/10W(1608)
R403	1-216-845-11	s	RESISTOR,CHIP 100K 1/10W(1608)
R404	1-216-845-11	s	RESISTOR,CHIP 100K 1/10W(1608)
R405	1-216-845-11	s	RESISTOR,CHIP 100K 1/10W(1608)
R408	1-216-821-11	s	RESISTOR,CHIP 1.0K 1/10W(1608)
R409	1-216-821-11	s	RESISTOR,CHIP 1.0K 1/10W(1608)
R411	1-216-821-11	s	RESISTOR,CHIP 1.0K 1/10W(1608)

(DSP-109 BOARD)

Ref. No. or Q'ty	Part No.	SP	Description
R412	1-216-797-11	s	RESISTOR,CHIP 10 1/10W 1608
R413	1-216-797-11	s	RESISTOR,CHIP 10 1/10W 1608
R416	1-216-821-11	s	RESISTOR,CHIP 1.0K 1/10W(1608)
R417	1-216-797-11	s	RESISTOR,CHIP 10 1/10W 1608
R418	1-216-821-11	s	RESISTOR,CHIP 1.0K 1/10W(1608)
R419	1-216-797-11	s	RESISTOR,CHIP 10 1/10W 1608
R420	1-216-797-11	s	RESISTOR,CHIP 10 1/10W 1608
R421	1-216-797-11	s	RESISTOR,CHIP 10 1/10W 1608
R423	1-216-797-11	s	RESISTOR,CHIP 10 1/10W 1608
R424	1-216-797-11	s	RESISTOR,CHIP 10 1/10W 1608
R425	1-216-797-11	s	RESISTOR,CHIP 10 1/10W 1608
R426	1-216-797-11	s	RESISTOR,CHIP 10 1/10W 1608
R429	1-216-841-11	s	RESISTOR, CHIP 47K 1/10W 1608
R430	1-216-864-11	s	CONDUCTOR, CHIP (1608)
R431	1-216-821-11	s	RESISTOR,CHIP 1.0K 1/10W(1608)
R432	1-216-821-11	s	RESISTOR,CHIP 1.0K 1/10W(1608)
R433	1-216-821-11	s	RESISTOR,CHIP 1.0K 1/10W(1608)
R434	1-216-821-11	s	RESISTOR,CHIP 1.0K 1/10W(1608)
R435	1-216-797-11	s	RESISTOR,CHIP 10 1/10W 1608
R436	1-216-797-11	s	RESISTOR,CHIP 10 1/10W 1608
R437	1-216-797-11	s	RESISTOR,CHIP 10 1/10W 1608
R438	1-216-821-11	s	RESISTOR,CHIP 1.0K 1/10W(1608)
R440	1-216-841-11	s	RESISTOR, CHIP 47K 1/10W 1608
R441	1-216-797-11	s	RESISTOR,CHIP 10 1/10W 1608
R442	1-216-821-11	s	RESISTOR,CHIP 1.0K 1/10W(1608)
R444	1-216-797-11	s	RESISTOR,CHIP 10 1/10W 1608
R445	1-216-833-11	s	RESISTOR,CHIP 10K 1/10W (1608)
R446	1-216-833-11	s	RESISTOR,CHIP 10K 1/10W (1608)
R447	1-216-864-11	s	CONDUCTOR, CHIP (1608)
R448	1-216-797-11	s	RESISTOR,CHIP 10 1/10W 1608
R449	1-216-797-11	s	RESISTOR,CHIP 10 1/10W 1608
R450	1-216-797-11	s	RESISTOR,CHIP 10 1/10W 1608
R451	1-216-797-11	s	RESISTOR,CHIP 10 1/10W 1608
R452	1-216-797-11	s	RESISTOR,CHIP 10 1/10W 1608
R453	1-216-797-11	s	RESISTOR,CHIP 10 1/10W 1608
R454	1-216-797-11	s	RESISTOR,CHIP 10 1/10W 1608
R455	1-216-845-11	s	RESISTOR,CHIP 100K 1/10W(1608)
R456	1-216-845-11	s	RESISTOR,CHIP 100K 1/10W(1608)
R457	1-216-845-11	s	RESISTOR,CHIP 100K 1/10W(1608)
R458	1-216-845-11	s	RESISTOR,CHIP 100K 1/10W(1608)
R459	1-216-845-11	s	RESISTOR,CHIP 100K 1/10W(1608)
R460	1-216-845-11	s	RESISTOR,CHIP 100K 1/10W(1608)
R461	1-216-845-11	s	RESISTOR,CHIP 100K 1/10W(1608)
R462	1-216-797-11	s	RESISTOR,CHIP 10 1/10W 1608
R463	1-216-821-11	s	RESISTOR,CHIP 1.0K 1/10W(1608)
R464	1-216-821-11	s	RESISTOR,CHIP 1.0K 1/10W(1608)
R465	1-216-821-11	s	RESISTOR,CHIP 1.0K 1/10W(1608)
R466	1-216-821-11	s	RESISTOR,CHIP 1.0K 1/10W(1608)
R467	1-216-825-11	s	RESISTOR,CHIP 2.2K 1/10W 1608
R468	1-216-825-11	s	RESISTOR,CHIP 2.2K 1/10W 1608
R469	1-216-821-11	s	RESISTOR,CHIP 1.0K 1/10W(1608)
R471	1-216-833-11	s	RESISTOR,CHIP 10K 1/10W (1608)
R472	1-216-833-11	s	RESISTOR,CHIP 10K 1/10W (1608)
RB1	1-233-574-11	s	RESISTOR,CHIP NETWORK 10
RB2	1-233-574-11	s	RESISTOR,CHIP NETWORK 10
RB3	1-233-574-11	s	RESISTOR,CHIP NETWORK 10
RB4	1-233-574-11	s	RESISTOR,CHIP NETWORK 10
RB5	1-233-574-11	s	RESISTOR,CHIP NETWORK 10

(DSP-109 BOARD)

Ref. No. or Q'ty	Part No.	SP	Description
RB6	1-233-574-11	s	RESISTOR,CHIP NETWORK 10
RB7	1-233-574-11	s	RESISTOR,CHIP NETWORK 10
RB9	1-233-574-11	s	RESISTOR,CHIP NETWORK 10
RB10	1-233-574-11	s	RESISTOR,CHIP NETWORK 10
RB11	1-233-574-11	s	RESISTOR,CHIP NETWORK 10
RB18	1-233-574-11	s	RESISTOR,CHIP NETWORK 10
RB19	1-233-574-11	s	RESISTOR,CHIP NETWORK 10
RB20	1-233-574-11	s	RESISTOR,CHIP NETWORK 10
RB21	1-233-574-11	s	RESISTOR,CHIP NETWORK 10
RB25	1-233-574-11	s	RESISTOR,CHIP NETWORK 10
RB26	1-233-574-11	s	RESISTOR,CHIP NETWORK 10
RB27	1-233-574-11	s	RESISTOR,CHIP NETWORK 10
RB28	1-233-574-11	s	RESISTOR,CHIP NETWORK 10
RB29	1-233-574-11	s	RESISTOR,CHIP NETWORK 10
RB30	1-233-574-11	s	RESISTOR,CHIP NETWORK 10
RB33	1-233-574-11	s	RESISTOR,CHIP NETWORK 10
RB34	1-233-574-11	s	RESISTOR,CHIP NETWORK 10
RB35	1-233-574-11	s	RESISTOR,CHIP NETWORK 10
RB36	1-233-574-11	s	RESISTOR,CHIP NETWORK 10
RB37	1-233-810-21	s	RES, NETWORK 100K (3216)
RB201	1-233-412-11	s	RESISTOR,CHIP NETWORK 1K
RB202	1-233-412-11	s	RESISTOR,CHIP NETWORK 1K
RB205	1-233-574-11	s	RESISTOR,CHIP NETWORK 10
RB206	1-233-574-11	s	RESISTOR,CHIP NETWORK 10
RB207	1-233-574-11	s	RESISTOR,CHIP NETWORK 10
RB208	1-233-574-11	s	RESISTOR,CHIP NETWORK 10
RB209	1-233-574-11	s	RESISTOR,CHIP NETWORK 10
RB210	1-233-574-11	s	RESISTOR,CHIP NETWORK 10
RB211	1-233-574-11	s	RESISTOR,CHIP NETWORK 10
RB212	1-233-574-11	s	RESISTOR,CHIP NETWORK 10
RB213	1-233-574-11	s	RESISTOR,CHIP NETWORK 10
RB214	1-233-574-11	s	RESISTOR,CHIP NETWORK 10
RB215	1-233-574-11	s	RESISTOR,CHIP NETWORK 10
RB216	1-233-574-11	s	RESISTOR,CHIP NETWORK 10
RB218	1-233-574-11	s	RESISTOR,CHIP NETWORK 10
S10	1-771-721-11	s	SWITCH, TACTILE
S11	1-692-881-41	s	SWITCH, SLIDE
TP1	1-535-877-22	s	CHIP,CHECKER (TEST POINT)
TP2	1-535-877-22	s	CHIP,CHECKER (TEST POINT)
X2	1-795-176-21	s	OSCILLATOR, CRYSTAL

DT-47 BOARD [SUFFIX 11]

[Lot No. 261 - 355] HDW-2000, M2000/P, M2100/P, A2100
MSW-2000, M2000/P, A2000/P, M2100/P

Ref. No. or Q'ty	Part No.	SP	Description
1pc	A-8324-870-A	o	MOUNTED CIRCUIT BOARD, DT-47
1pc	1-803-490-11	s	SENSOR, DEW CONDENSATION
1pc	4-641-552-01	o	SADDLE, LOCK EDGE
1pc	7-621-772-10	s	SCREW +B2X4
1pc	7-682-903-21	s	SCREW +PWH 3X8(EP-FE/ZN/CM2)
C1	1-164-156-11	s	CAPACITOR,CERAMIC 0.1MF/25V F
C2	1-164-156-11	s	CAPACITOR,CERAMIC 0.1MF/25V F
C3	1-164-156-11	s	CAPACITOR,CERAMIC 0.1MF/25V F
C4	1-164-156-11	s	CAPACITOR,CERAMIC 0.1MF/25V F
C5	1-164-156-11	s	CAPACITOR,CERAMIC 0.1MF/25V F
C6	1-164-156-11	s	CAPACITOR,CERAMIC 0.1MF/25V F
C7	1-164-156-11	s	CAPACITOR,CERAMIC 0.1MF/25V F
C8	1-164-156-11	s	CAPACITOR,CERAMIC 0.1MF/25V F
C9	1-164-156-11	s	CAPACITOR,CERAMIC 0.1MF/25V F
C10	1-164-156-11	s	CAPACITOR,CERAMIC 0.1MF/25V F
C11	1-164-156-11	s	CAPACITOR,CERAMIC 0.1MF/25V F
C12	1-164-156-11	s	CAPACITOR,CERAMIC 0.1MF/25V F
C13	1-164-156-11	s	CAPACITOR,CERAMIC 0.1MF/25V F
C14	1-164-156-11	s	CAPACITOR,CERAMIC 0.1MF/25V F
C15	1-162-964-11	s	CAPACITOR,CERAMIC 1000PF/50V B
C16	1-164-156-11	s	CAPACITOR,CERAMIC 0.1MF/25V F
C17	1-164-156-11	s	CAPACITOR,CERAMIC 0.1MF/25V F
C20	1-126-397-11	s	CAPACITOR ELECT 33MF/25V(CHIP)
C21	1-126-397-11	s	CAPACITOR ELECT 33MF/25V(CHIP)
C22	1-164-156-11	s	CAPACITOR,CERAMIC 0.1MF/25V F
C23	1-126-935-11	s	CAPACITOR,ELECT 470MF/16V
C24	1-126-935-11	s	CAPACITOR,ELECT 470MF/16V
C25	1-126-935-11	s	CAPACITOR,ELECT 470MF/16V
C26	1-126-935-11	s	CAPACITOR,ELECT 470MF/16V
C27	1-126-935-11	s	CAPACITOR,ELECT 470MF/16V
C28	1-104-760-11	s	CAPACITOR CERAMIC 0.047MF/50V
C29	1-104-760-11	s	CAPACITOR CERAMIC 0.047MF/50V
C30	1-126-401-11	s	CAPACITOR, ELECT 1MF/50V(CHIP)
C31	1-107-967-11	s	CAPACITOR, ELECT 1.0MF/400V
C32	1-107-967-11	s	CAPACITOR, ELECT 1.0MF/400V
C33	1-107-967-11	s	CAPACITOR, ELECT 1.0MF/400V
C34	1-107-967-11	s	CAPACITOR, ELECT 1.0MF/400V
C35	1-107-967-11	s	CAPACITOR, ELECT 1.0MF/400V
C36	1-107-967-11	s	CAPACITOR, ELECT 1.0MF/400V
C37	1-126-397-11	s	CAPACITOR ELECT 33MF/25V(CHIP)
C100	1-162-967-11	s	CAPACITOR,CERAMIC 3300PF/50V B
C101	1-162-967-11	s	CAPACITOR,CERAMIC 3300PF/50V B
C103	1-162-968-11	s	CAPACITOR,CERAMIC 4700PF/50V B
C104	1-107-960-11	s	CAPACITOR,ELECT 4.7MF/250V
C105	1-162-968-11	s	CAPACITOR,CERAMIC 4700PF/50V B
C106	1-162-927-11	s	CAPACITOR,CERAMIC 100PF/50V CH
C109	1-162-964-11	s	CAPACITOR,CERAMIC 1000PF/50V B
C200	1-162-967-11	s	CAPACITOR,CERAMIC 3300PF/50V B
C201	1-162-967-11	s	CAPACITOR,CERAMIC 3300PF/50V B
C202	1-162-968-11	s	CAPACITOR,CERAMIC 4700PF/50V B
C203	1-162-927-11	s	CAPACITOR,CERAMIC 100PF/50V CH
C204	1-107-960-11	s	CAPACITOR,ELECT 4.7MF/250V
C205	1-162-968-11	s	CAPACITOR,CERAMIC 4700PF/50V B
C206	1-164-156-11	s	CAPACITOR,CERAMIC 0.1MF/25V F
C207	1-164-156-11	s	CAPACITOR,CERAMIC 0.1MF/25V F
C209	1-162-964-11	s	CAPACITOR,CERAMIC 1000PF/50V B

(DT-47 BOARD [SUFFIX 11])

Ref. No. or Q'ty	Part No.	SP	Description
CN201	1-778-551-11	o	PIN, CONNECTOR 20P
CN220	1-562-708-11	o	SOCKET,CONNECTOR FFC/FPC (13P)
D2	8-719-404-35	s	DIODE MA141WK
D3	8-719-024-81	s	DIODE 1SS300-TE85L
D4	8-719-024-81	s	DIODE 1SS300-TE85L
D100	8-719-820-41	s	DIODE 1SS302
D101	8-719-024-81	s	DIODE 1SS300-TE85L
D200	8-719-820-41	s	DIODE 1SS302
D201	8-719-024-81	s	DIODE 1SS300-TE85L
D202	8-719-300-33	s	DIODE RU3AM (RECTI)
D203	8-719-300-33	s	DIODE RU3AM (RECTI)
D204	8-719-300-33	s	DIODE RU3AM (RECTI)
D205	8-719-300-33	s	DIODE RU3AM (RECTI)
F1	⚠ 1-576-212-21	s	FUSE CHIP 1.25A (6125)
IC1	8-759-300-71	s	IC HD14053BFP
IC2	8-759-422-21	s	IC NJM4580VTE2
IC3	8-759-422-21	s	IC NJM4580VTE2
IC4	8-759-422-21	s	IC NJM4580VTE2
IC5	8-759-422-21	s	IC NJM4580VTE2
IC6	8-759-422-21	s	IC NJM4580VTE2
IC7	8-759-338-95	s	IC NJM2903V (TE2)
IC8	8-759-183-53	s	IC TL431CPK-E2
IC9	8-759-700-78	s	IC NJM082M
IC10	8-759-700-78	s	IC NJM082M
L1	1-414-402-11	s	INDUCTOR (SMD) 47UH
L2	1-414-402-11	s	INDUCTOR (SMD) 47UH
L3	1-414-402-11	s	INDUCTOR (SMD) 47UH
L4	1-416-511-11	s	COIL, CHOKE 47.0UH
L5	1-416-511-11	s	COIL, CHOKE 47.0UH
L6	1-406-680-11	s	COIL CHOKE 33MH
L7	1-406-680-11	s	COIL CHOKE 33MH
L8	1-406-680-11	s	COIL CHOKE 33MH
L9	1-406-680-11	s	COIL CHOKE 33MH
Q1	8-729-140-63	s	TRANSISTOR 2SA1611-M5M6
Q2	8-729-117-32	s	TRANSISTOR 2SC4177
Q3	8-729-105-19	s	TRANSISTOR 2SC3518L
Q4	8-729-105-19	s	TRANSISTOR 2SC3518L
Q5	8-729-028-99	s	TRANSISTOR DTC114YUA-T106
Q100	8-729-105-97	s	TRANSISTOR 2SA1156-2K
Q101	8-729-141-78	s	TRANSISTOR 2SC3632-K
Q102	8-729-117-32	s	TRANSISTOR 2SC4177
Q103	8-729-140-63	s	TRANSISTOR 2SA1611-M5M6
Q104	8-729-141-78	s	TRANSISTOR 2SC3632-K
Q105	8-729-118-43	s	TRANSISTOR 2SA1413-L
Q200	8-729-105-97	s	TRANSISTOR 2SA1156-2K
Q201	8-729-141-78	s	TRANSISTOR 2SC3632-K
Q202	8-729-117-32	s	TRANSISTOR 2SC4177
Q203	8-729-140-63	s	TRANSISTOR 2SA1611-M5M6
Q204	8-729-141-78	s	TRANSISTOR 2SC3632-K
Q205	8-729-118-43	s	TRANSISTOR 2SA1413-L
R1	1-218-668-11	s	RESISTOR,CHIP 100 1/16W (1608)
R2	1-218-732-11	s	RESISTOR,CHIP 47K 1/16W(1608)
R3	1-218-716-11	s	RESISTOR,CHIP 10K 1/16W(1608)
R4	1-218-716-11	s	RESISTOR,CHIP 10K 1/16W(1608)
R5	1-218-716-11	s	RESISTOR,CHIP 10K 1/16W(1608)

(DT-47 BOARD [SUFFIX 11])

Ref. No. or Q'ty	Part No.	SP	Description
R6	1-218-735-11	s	RESISTOR CHIP 62K 1/16W(1608)
R7	1-218-727-11	s	RESISTOR,CHIP 30K 1/16W(1608)
R8	1-218-700-11	s	RESISTOR,CHIP 2.2K 1/16W(1608)
R11	1-220-227-11	s	RESISTOR,CHIP 1.2 1/4W (3225)
R12	1-220-227-11	s	RESISTOR,CHIP 1.2 1/4W (3225)
R13	1-220-264-11	s	RESISTOR,CHIP 1K 1/4W (3225)
R14	1-218-668-11	s	RESISTOR,CHIP 100 1/16W (1608)
R15	1-218-716-11	s	RESISTOR,CHIP 10K 1/16W(1608)
R100	1-218-708-11	s	RESISTOR,CHIP 4.7K 1/16W(1608)
R101	1-218-708-11	s	RESISTOR,CHIP 4.7K 1/16W(1608)
R102	1-218-730-11	s	RESISTOR METAL FILM CHIP 39K
R103	1-218-730-11	s	RESISTOR METAL FILM CHIP 39K
R104	1-218-732-11	s	RESISTOR,CHIP 47K 1/16W(1608)
R105	1-218-708-11	s	RESISTOR,CHIP 4.7K 1/16W(1608)
R106	1-218-716-11	s	RESISTOR,CHIP 10K 1/16W(1608)
R107	1-220-340-11	s	RESISTOR CHIP 470K 1/2W (4532)
R108	1-218-708-11	s	RESISTOR,CHIP 4.7K 1/16W(1608)
R109	1-218-708-11	s	RESISTOR,CHIP 4.7K 1/16W(1608)
R110	1-218-716-11	s	RESISTOR,CHIP 10K 1/16W(1608)
R111	1-220-338-11	s	RESISTOR,CHIP 330K 1/2W (4532)
R112	1-218-724-11	s	RESISTOR,CHIP 22K 1/16W(1608)
R114	1-220-332-11	s	RESISTOR,CHIP 100K 1/2W (4532)
R115	1-220-332-11	s	RESISTOR,CHIP 100K 1/2W (4532)
R116	1-218-656-11	s	RESISTOR,CHIP 33 1/16W (1608)
R117	1-218-656-11	s	RESISTOR,CHIP 33 1/16W (1608)
R118	1-218-369-11	s	RESISTOR,CHIP 2.2K 1/2W (4532)
R119	1-216-857-11	s	RESISTOR,CHIP 1M 1/16W(1608)
R120	1-216-857-11	s	RESISTOR,CHIP 1M 1/16W(1608)
R121	1-218-736-11	s	RESISTOR,CHIP 68K 1/16W(1608)
R122	1-218-716-11	s	RESISTOR,CHIP 10K 1/16W(1608)
R123	1-216-857-11	s	RESISTOR,CHIP 1M 1/16W(1608)
R124	1-218-750-11	s	RESISTOR,CHIP 270K 1/16W(1608)
R125	1-218-716-11	s	RESISTOR,CHIP 10K 1/16W(1608)
R126	1-218-748-11	s	RESISTOR,CHIP 220K 1/16W(1608)
R127	1-218-668-11	s	RESISTOR,CHIP 100 1/16W (1608)
R128	1-218-706-11	s	RESISTOR,CHIP 3.9K 1/16W(1608)
R200	1-218-708-11	s	RESISTOR,CHIP 4.7K 1/16W(1608)
R201	1-218-708-11	s	RESISTOR,CHIP 4.7K 1/16W(1608)
R202	1-218-730-11	s	RESISTOR METAL FILM CHIP 39K
R203	1-218-730-11	s	RESISTOR METAL FILM CHIP 39K
R204	1-218-732-11	s	RESISTOR,CHIP 47K 1/16W(1608)
R205	1-218-708-11	s	RESISTOR,CHIP 4.7K 1/16W(1608)
R206	1-218-716-11	s	RESISTOR,CHIP 10K 1/16W(1608)
R207	1-220-340-11	s	RESISTOR CHIP 470K 1/2W (4532)
R208	1-218-708-11	s	RESISTOR,CHIP 4.7K 1/16W(1608)
R209	1-218-708-11	s	RESISTOR,CHIP 4.7K 1/16W(1608)
R210	1-218-716-11	s	RESISTOR,CHIP 10K 1/16W(1608)
R211	1-220-338-11	s	RESISTOR,CHIP 330K 1/2W (4532)
R212	1-218-724-11	s	RESISTOR,CHIP 22K 1/16W(1608)
R214	1-220-332-11	s	RESISTOR,CHIP 100K 1/2W (4532)
R215	1-220-332-11	s	RESISTOR,CHIP 100K 1/2W (4532)
R216	1-218-656-11	s	RESISTOR,CHIP 33 1/16W (1608)
R217	1-218-656-11	s	RESISTOR,CHIP 33 1/16W (1608)
R218	1-218-369-11	s	RESISTOR,CHIP 2.2K 1/2W (4532)
R219	1-216-857-11	s	RESISTOR,CHIP 1M 1/16W(1608)
R220	1-216-857-11	s	RESISTOR,CHIP 1M 1/16W(1608)
R221	1-218-736-11	s	RESISTOR,CHIP 68K 1/16W(1608)
R222	1-218-716-11	s	RESISTOR,CHIP 10K 1/16W(1608)
R223	1-216-857-11	s	RESISTOR,CHIP 1M 1/16W(1608)

(DT-47 BOARD [SUFFIX 11])

Ref. No. or Q'ty	Part No.	SP	Description
R224	1-218-750-11	s	RESISTOR,CHIP 270K 1/16W(1608)
R225	1-218-716-11	s	RESISTOR,CHIP 10K 1/16W(1608)
R226	1-218-748-11	s	RESISTOR,CHIP 220K 1/16W(1608)
R227	1-218-668-11	s	RESISTOR,CHIP 100 1/16W (1608)
R228	1-218-706-11	s	RESISTOR,CHIP 3.9K 1/16W(1608)
R229	1-216-857-11	s	RESISTOR,CHIP 1M 1/16W(1608)
R230	1-216-857-11	s	RESISTOR,CHIP 1M 1/16W(1608)
RY1	1-755-381-11	s	RELAY
T1	1-448-937-11	s	TRANSFORMER,CONVERTER

DT-47 BOARD [SUFFIX 12-]

[Lot No. 361 -] HDW-2000, M2000/P, M2100/P, A2100
[Lot No. 4C2 -] HDW-D2000
[Lot No. 462 -] HDW-S2000/P
[Lot No. 434 -] DVW-2000/P, M2000/P
[Lot No. 361 -] MSW-2000, M2000/P, A2000/P, M2100/P
[Lot No. 495 -] MSW-M2000E/P, M2100E/P

Ref. No. or Q'ty	Part No.	SP	Description
1pc	A-8324-870-B	s	MOUNTED CIRCUIT BOARD, DT-47
1pc	1-803-490-12	s	SENSOR, DEW CONDENSATION
1pc	4-641-552-01	o	SADDLE, LOCK EDGE
1pc	7-621-772-10	s	SCREW +B2X4
1pc	7-682-903-21	s	SCREW +PWH 3X8(EP-FE/ZN/CM2)
C1	1-131-992-11	s	CAP, CERAMIC 100000PF F 1608
C2	1-131-992-11	s	CAP, CERAMIC 100000PF F 1608
C3	1-131-992-11	s	CAP, CERAMIC 100000PF F 1608
C4	1-131-992-11	s	CAP, CERAMIC 100000PF F 1608
C5	1-131-992-11	s	CAP, CERAMIC 100000PF F 1608
C6	1-131-992-11	s	CAP, CERAMIC 100000PF F 1608
C7	1-131-992-11	s	CAP, CERAMIC 100000PF F 1608
C8	1-131-992-11	s	CAP, CERAMIC 100000PF F 1608
C9	1-131-992-11	s	CAP, CERAMIC 100000PF F 1608
C10	1-131-992-11	s	CAP, CERAMIC 100000PF F 1608
C11	1-131-992-11	s	CAP, CERAMIC 100000PF F 1608
C12	1-131-992-11	s	CAP, CERAMIC 100000PF F 1608
C13	1-131-992-11	s	CAP, CERAMIC 100000PF F 1608
C14	1-131-992-11	s	CAP, CERAMIC 100000PF F 1608
C15	1-162-964-11	s	CAPACITOR,CERAMIC 1000PF/50V B
C16	1-131-992-11	s	CAP, CERAMIC 100000PF F 1608
C17	1-131-992-11	s	CAP, CERAMIC 100000PF F 1608
C20	1-126-400-11	s	CAPACITOR ELECT 22MF/35V(CHIP)
C21	1-126-400-11	s	CAPACITOR ELECT 22MF/35V(CHIP)
C22	1-131-992-11	s	CAP, CERAMIC 100000PF F 1608
C23	1-107-778-11	s	CAPACITOR,ELECT 470MF/16V CHIP
C24	1-107-778-11	s	CAPACITOR,ELECT 470MF/16V CHIP
C25	1-107-778-11	s	CAPACITOR,ELECT 470MF/16V CHIP
C26	1-107-778-11	s	CAPACITOR,ELECT 470MF/16V CHIP
C27	1-107-778-11	s	CAPACITOR,ELECT 470MF/16V CHIP
C28	1-104-760-11	s	CAPACITOR CERAMIC 0.047MF/50V
C29	1-104-760-11	s	CAPACITOR CERAMIC 0.047MF/50V
C30	1-165-947-91	s	CAP, CHIP CERAMIC 2.2MF (3225)
C31	1-107-967-11	s	CAPACITOR, ELECT 1.0MF/400V
C32	1-107-967-11	s	CAPACITOR, ELECT 1.0MF/400V
C33	1-107-967-11	s	CAPACITOR, ELECT 1.0MF/400V
C34	1-107-967-11	s	CAPACITOR, ELECT 1.0MF/400V
C35	1-107-967-11	s	CAPACITOR, ELECT 1.0MF/400V
C36	1-107-967-11	s	CAPACITOR, ELECT 1.0MF/400V
C37	1-126-400-11	s	CAPACITOR ELECT 22MF/35V(CHIP)
C100	1-162-967-11	s	CAPACITOR,CERAMIC 3300PF/50V B
C101	1-162-967-11	s	CAPACITOR,CERAMIC 3300PF/50V B
C103	1-162-968-11	s	CAPACITOR,CERAMIC 4700PF/50V B
C104	1-107-960-11	s	CAPACITOR,ELECT 4.7MF/250V
C105	1-162-968-11	s	CAPACITOR,CERAMIC 4700PF/50V B
C106	1-162-927-11	s	CAPACITOR,CERAMIC 100PF/50V CH
C109	1-162-964-11	s	CAPACITOR,CERAMIC 1000PF/50V B
C200	1-162-967-11	s	CAPACITOR,CERAMIC 3300PF/50V B
C201	1-162-967-11	s	CAPACITOR,CERAMIC 3300PF/50V B
C202	1-162-968-11	s	CAPACITOR,CERAMIC 4700PF/50V B
C203	1-162-927-11	s	CAPACITOR,CERAMIC 100PF/50V CH
C204	1-107-960-11	s	CAPACITOR,ELECT 4.7MF/250V
C205	1-162-968-11	s	CAPACITOR,CERAMIC 4700PF/50V B
C206	1-131-992-11	s	CAP, CERAMIC 100000PF F 1608
C207	1-131-992-11	s	CAP, CERAMIC 100000PF F 1608

(DT-47 BOARD [SUFFIX 12-])

Ref. No. or Q'ty	Part No.	SP	Description
C209	1-162-964-11	s	CAPACITOR,CERAMIC 1000PF/50V B
CN201	1-778-551-11	o	PIN, CONNECTOR 20P
CN220	1-562-708-11	o	SOCKET,CONNECTOR FFC/FPC (13P)
D2	8-719-801-78	s	DIODE 1SS184
D3	8-719-024-81	s	DIODE 1SS300-TE85L
D4	8-719-024-81	s	DIODE 1SS300-TE85L
D5	8-719-300-33	s	DIODE RU3AM (RECTI)
D6	8-719-300-33	s	DIODE RU3AM (RECTI)
D7	8-719-300-33	s	DIODE RU3AM (RECTI)
D8	8-719-300-33	s	DIODE RU3AM (RECTI)
D100	8-719-820-41	s	DIODE 1SS302
D101	8-719-024-81	s	DIODE 1SS300-TE85L
D200	8-719-820-41	s	DIODE 1SS302
D201	8-719-024-81	s	DIODE 1SS300-TE85L
E1	1-535-877-22	s	CHIP,CHECKER (TEST POINT)
F1	⚠ 1-533-483-11	s	FUSE CHIP 1.6A/125V (6125)
IC1	8-759-300-71	s	IC HD14053BFP
IC2	8-759-422-21	s	IC NJM4580VTE2
IC3	8-759-422-21	s	IC NJM4580VTE2
IC4	8-759-422-21	s	IC NJM4580VTE2
IC5	8-759-422-21	s	IC NJM4580VTE2
IC6	8-759-422-21	s	IC NJM4580VTE2
IC7	8-759-338-95	s	IC NJM2903V (TE2)
IC8	8-759-183-53	s	IC TL431CPK-E2
IC9	8-759-700-78	s	IC NJM082M
IC10	8-759-700-78	s	IC NJM082M
L1	1-410-389-31	s	INDUCTOR,CHIP 47UH (3225)
L2	1-410-389-31	s	INDUCTOR,CHIP 47UH (3225)
L3	1-410-389-31	s	INDUCTOR,CHIP 47UH (3225)
L4	1-416-511-11	s	COIL, CHOKE 47.0UH
L5	1-416-511-11	s	COIL, CHOKE 47.0UH
L6	1-406-680-11	s	COIL CHOKE 33MH
L7	1-406-680-11	s	COIL CHOKE 33MH
L8	1-406-680-11	s	COIL CHOKE 33MH
L9	1-406-680-11	s	COIL CHOKE 33MH
Q1	8-729-140-63	s	TRANSISTOR 2SA1611-M5M6
Q2	8-729-117-32	s	TRANSISTOR 2SC4177
Q3	8-729-105-19	s	TRANSISTOR 2SC3518L
Q4	8-729-105-19	s	TRANSISTOR 2SC3518L
Q5	8-729-928-81	s	TRANSISTOR DTC144EE
Q6	8-729-928-81	s	TRANSISTOR DTC144EE
Q100	8-729-105-97	s	TRANSISTOR 2SA1156-2K
Q101	8-729-141-78	s	TRANSISTOR 2SC3632-K
Q102	8-729-117-32	s	TRANSISTOR 2SC4177
Q103	8-729-140-63	s	TRANSISTOR 2SA1611-M5M6
Q104	8-729-141-78	s	TRANSISTOR 2SC3632-K
Q105	8-729-118-43	s	TRANSISTOR 2SA1413-L
Q200	8-729-105-97	s	TRANSISTOR 2SA1156-2K
Q201	8-729-141-78	s	TRANSISTOR 2SC3632-K
Q202	8-729-117-32	s	TRANSISTOR 2SC4177
Q203	8-729-140-63	s	TRANSISTOR 2SA1611-M5M6
Q204	8-729-141-78	s	TRANSISTOR 2SC3632-K
Q205	8-729-118-43	s	TRANSISTOR 2SA1413-L
R1	1-218-823-11	s	RESISTOR,CHIP 100 1/10W (1608)
R2	1-218-887-11	s	RESISTOR,CHIP 47K 1/10W (1608)

(DT-47 BOARD [SUFFIX 12-])

Ref. No. or Q'ty	Part No.	SP	Description
R3	1-218-871-11	s	RESISTOR,CHIP 10K 1/10W (1608)
R4	1-218-871-11	s	RESISTOR,CHIP 10K 1/10W (1608)
R5	1-218-871-11	s	RESISTOR,CHIP 10K 1/10W (1608)
R6	1-218-890-11	s	RESISTOR, CHIP 62K 1/10W(1608)
R7	1-218-882-11	s	RESISTOR, CHIP 30K 1/10W(1608)
R8	1-218-855-11	s	RESISTOR,CHIP 2.2K 1/10W(1608)
R11	1-218-236-91	s	RESISTOR,CHIP 1 1/4W
R12	1-218-236-91	s	RESISTOR,CHIP 1 1/4W
R13	1-220-264-11	s	RESISTOR,CHIP 1K 1/4W (3225)
R14	1-218-823-11	s	RESISTOR,CHIP 100 1/10W (1608)
R15	1-218-871-11	s	RESISTOR,CHIP 10K 1/10W (1608)
R100	1-218-863-11	s	RESISTOR,CHIP 4.7K 1/10W(1608)
R101	1-218-863-11	s	RESISTOR,CHIP 4.7K 1/10W(1608)
R102	1-218-885-11	s	RESISTOR,CHIP 39K 1/10W (1608)
R103	1-218-885-11	s	RESISTOR,CHIP 39K 1/10W (1608)
R104	1-218-887-11	s	RESISTOR,CHIP 47K 1/10W (1608)
R105	1-218-863-11	s	RESISTOR,CHIP 4.7K 1/10W(1608)
R106	1-218-871-11	s	RESISTOR,CHIP 10K 1/10W (1608)
R107	1-220-340-11	s	RESISTOR CHIP 470K 1/2W (4532)
R108	1-218-863-11	s	RESISTOR,CHIP 4.7K 1/10W(1608)
R109	1-218-863-11	s	RESISTOR,CHIP 4.7K 1/10W(1608)
R110	1-218-867-11	s	RESISTOR,CHIP 6.8K 1/10W(1608)
R111	1-220-317-11	s	RESISTOR CHIP 220K 1/4W (3225)
R112	1-218-879-11	s	RESISTOR,CHIP 22K 1/10W (1608)
R114	1-220-332-11	s	RESISTOR,CHIP 100K 1/2W (4532)
R115	1-220-332-11	s	RESISTOR,CHIP 100K 1/2W (4532)
R116	1-211-981-11	s	RESISTOR,CHIP 33 1/10W (1608)
R117	1-211-981-11	s	RESISTOR,CHIP 33 1/10W (1608)
R118	1-218-369-11	s	RESISTOR,CHIP 2.2K 1/2W (4532)
R119	1-216-857-11	s	RESISTOR,CHIP 1M 1/10W(1608)
R120	1-216-857-11	s	RESISTOR,CHIP 1M 1/10W(1608)
R121	1-218-891-11	s	RESISTOR,CHIP 68K 1/10W (1608)
R122	1-218-871-11	s	RESISTOR,CHIP 10K 1/10W (1608)
R123	1-216-857-11	s	RESISTOR,CHIP 1M 1/10W(1608)
R124	1-218-903-11	s	RESISTOR,CHIP 220K 1/10W(1608)
R125	1-218-871-11	s	RESISTOR,CHIP 10K 1/10W (1608)
R126	1-218-903-11	s	RESISTOR,CHIP 220K 1/10W(1608)
R127	1-218-823-11	s	RESISTOR,CHIP 100 1/10W (1608)
R128	1-218-861-11	s	RESISTOR,CHIP 3.9K 1/10W(1608)
R200	1-218-863-11	s	RESISTOR,CHIP 4.7K 1/10W(1608)
R201	1-218-863-11	s	RESISTOR,CHIP 4.7K 1/10W(1608)
R202	1-218-885-11	s	RESISTOR,CHIP 39K 1/10W (1608)
R203	1-218-885-11	s	RESISTOR,CHIP 39K 1/10W (1608)
R204	1-218-887-11	s	RESISTOR,CHIP 47K 1/10W (1608)
R205	1-218-863-11	s	RESISTOR,CHIP 4.7K 1/10W(1608)
R206	1-218-871-11	s	RESISTOR,CHIP 10K 1/10W (1608)
R207	1-220-340-11	s	RESISTOR CHIP 470K 1/2W (4532)
R208	1-218-863-11	s	RESISTOR,CHIP 4.7K 1/10W(1608)
R209	1-218-863-11	s	RESISTOR,CHIP 4.7K 1/10W(1608)
R210	1-218-867-11	s	RESISTOR,CHIP 6.8K 1/10W(1608)
R211	1-220-317-11	s	RESISTOR CHIP 220K 1/4W (3225)
R212	1-218-879-11	s	RESISTOR,CHIP 22K 1/10W (1608)
R214	1-220-332-11	s	RESISTOR,CHIP 100K 1/2W (4532)
R215	1-220-332-11	s	RESISTOR,CHIP 100K 1/2W (4532)
R216	1-211-981-11	s	RESISTOR,CHIP 33 1/10W (1608)
R217	1-211-981-11	s	RESISTOR,CHIP 33 1/10W (1608)
R218	1-218-369-11	s	RESISTOR,CHIP 2.2K 1/2W (4532)
R219	1-216-857-11	s	RESISTOR,CHIP 1M 1/10W(1608)
R220	1-216-857-11	s	RESISTOR,CHIP 1M 1/10W(1608)

(DT-47 BOARD [SUFFIX 12-])

Ref. No. or Q'ty	Part No.	SP	Description
R221	1-218-891-11	s	RESISTOR,CHIP 68K 1/10W (1608)
R222	1-218-871-11	s	RESISTOR,CHIP 10K 1/10W (1608)
R223	1-216-857-11	s	RESISTOR,CHIP 1M 1/10W(1608)
R224	1-218-903-11	s	RESISTOR,CHIP 220K 1/10W(1608)
R225	1-218-871-11	s	RESISTOR,CHIP 10K 1/10W (1608)
R226	1-218-903-11	s	RESISTOR,CHIP 220K 1/10W(1608)
R227	1-218-823-11	s	RESISTOR,CHIP 100 1/10W (1608)
R228	1-218-861-11	s	RESISTOR,CHIP 3.9K 1/10W(1608)
R229	1-216-857-11	s	RESISTOR,CHIP 1M 1/10W(1608)
R230	1-216-857-11	s	RESISTOR,CHIP 1M 1/10W(1608)
RY1	1-755-381-11	s	RELAY
T1	1-448-937-11	s	TRANSFORMER,CONVERTER
TP100	1-535-877-22	s	CHIP,CHECKER (TEST POINT)
TP200	1-535-877-22	s	CHIP,CHECKER (TEST POINT)

DU-178 BOARD

DU-178 board is piggybacked on DPR-155 board with suffix 13.

Ref. No. or Q'ty	Part No.	SP	Description
1pc	A-8328-478-A	s	MOUNTED CIRCUIT BOARD, DU-178
C1	1-135-149-21	s	CAPACITOR TANTALUM 2.2MF/10V
C2	1-135-149-21	s	CAPACITOR TANTALUM 2.2MF/10V
F1	⚠ 1-576-270-11	s	FUSE CHIP 4A/125V (6125)
Q1	8-729-140-63	s	TRANSISTOR 2SA1611-M5M6
Q2	8-729-045-53	s	TRANSISTOR SI4431DY-T1
R1	1-216-821-11	s	RESISTOR,CHIP 1.0K 1/16W(1608)
R2	1-216-821-11	s	RESISTOR,CHIP 1.0K 1/16W(1608)
R3	1-216-815-11	s	RESISTOR,CHIP 330 1/16W 1608
R4	1-216-815-11	s	RESISTOR,CHIP 330 1/16W 1608

EPR-1B BOARD [SUFFIX 14] for MSW RECORDER

[Lot No. 261 - 375] MSW-2000, M2000/P, A2000/P

Ref. No. or Q'ty	Part No.	SP	Description
1pc	A-8345-214-A	s	MOUNTED CIRCUIT BOARD, EPR-1B
1pc	3-179-084-11	s	LEVER (R), C BOARD
1pc	3-179-085-11	s	LEVER (L), C BOARD
C1	1-126-394-11	s	CAPACITOR,ELECT 10MF/16V(CHIP)
C2	1-164-156-11	s	CAPACITOR,CERAMIC 0.1MF/25V F
C3	1-164-156-11	s	CAPACITOR,CERAMIC 0.1MF/25V F
C4	1-164-156-11	s	CAPACITOR,CERAMIC 0.1MF/25V F
C5	1-131-661-11	s	CAPACITOR,ELECT 100MF/10V CHIP
C6	1-131-661-11	s	CAPACITOR,ELECT 100MF/10V CHIP
C7	1-164-156-11	s	CAPACITOR,CERAMIC 0.1MF/25V F
C8	1-164-156-11	s	CAPACITOR,CERAMIC 0.1MF/25V F
C9	1-164-156-11	s	CAPACITOR,CERAMIC 0.1MF/25V F
C10	1-107-418-11	s	CAPACITOR,CHIP ELECT 10MF 35V
C11	1-131-661-11	s	CAPACITOR,ELECT 100MF/10V CHIP
C12	1-131-661-11	s	CAPACITOR,ELECT 100MF/10V CHIP
C51	1-113-986-11	s	CAPACITOR,TANTALUM 2.2MF/25V
C52	1-113-986-11	s	CAPACITOR,TANTALUM 2.2MF/25V
C100	1-126-394-11	s	CAPACITOR,ELECT 10MF/16V(CHIP)
C101	1-164-156-11	s	CAPACITOR,CERAMIC 0.1MF/25V F
C105	1-164-156-11	s	CAPACITOR,CERAMIC 0.1MF/25V F
C106	1-164-156-11	s	CAPACITOR,CERAMIC 0.1MF/25V F
C107	1-164-156-11	s	CAPACITOR,CERAMIC 0.1MF/25V F
C108	1-164-156-11	s	CAPACITOR,CERAMIC 0.1MF/25V F
C109	1-164-156-11	s	CAPACITOR,CERAMIC 0.1MF/25V F
C110	1-164-156-11	s	CAPACITOR,CERAMIC 0.1MF/25V F
C111	1-164-156-11	s	CAPACITOR,CERAMIC 0.1MF/25V F
C112	1-164-156-11	s	CAPACITOR,CERAMIC 0.1MF/25V F
C113	1-164-156-11	s	CAPACITOR,CERAMIC 0.1MF/25V F
C115	1-164-156-11	s	CAPACITOR,CERAMIC 0.1MF/25V F
C116	1-164-156-11	s	CAPACITOR,CERAMIC 0.1MF/25V F
C200	1-164-156-11	s	CAPACITOR,CERAMIC 0.1MF/25V F
C201	1-131-661-11	s	CAPACITOR,ELECT 100MF/10V CHIP
C202	1-126-394-11	s	CAPACITOR,ELECT 10MF/16V(CHIP)
C203	1-164-156-11	s	CAPACITOR,CERAMIC 0.1MF/25V F
C204	1-164-156-11	s	CAPACITOR,CERAMIC 0.1MF/25V F
C205	1-164-156-11	s	CAPACITOR,CERAMIC 0.1MF/25V F
C206	1-164-156-11	s	CAPACITOR,CERAMIC 0.1MF/25V F
C207	1-164-156-11	s	CAPACITOR,CERAMIC 0.1MF/25V F
C208	1-126-394-11	s	CAPACITOR,ELECT 10MF/16V(CHIP)
C209	1-164-156-11	s	CAPACITOR,CERAMIC 0.1MF/25V F
C210	1-164-156-11	s	CAPACITOR,CERAMIC 0.1MF/25V F
C211	1-164-156-11	s	CAPACITOR,CERAMIC 0.1MF/25V F
C212	1-164-156-11	s	CAPACITOR,CERAMIC 0.1MF/25V F
C213	1-164-156-11	s	CAPACITOR,CERAMIC 0.1MF/25V F
C214	1-164-156-11	s	CAPACITOR,CERAMIC 0.1MF/25V F
C215	1-164-156-11	s	CAPACITOR,CERAMIC 0.1MF/25V F
C216	1-164-156-11	s	CAPACITOR,CERAMIC 0.1MF/25V F
C217	1-164-156-11	s	CAPACITOR,CERAMIC 0.1MF/25V F
C218	1-126-394-11	s	CAPACITOR,ELECT 10MF/16V(CHIP)
C300	1-126-394-11	s	CAPACITOR,ELECT 10MF/16V(CHIP)
C301	1-164-156-11	s	CAPACITOR,CERAMIC 0.1MF/25V F
C302	1-164-156-11	s	CAPACITOR,CERAMIC 0.1MF/25V F
C303	1-164-156-11	s	CAPACITOR,CERAMIC 0.1MF/25V F
C304	1-164-156-11	s	CAPACITOR,CERAMIC 0.1MF/25V F
C305	1-164-156-11	s	CAPACITOR,CERAMIC 0.1MF/25V F
C306	1-164-156-11	s	CAPACITOR,CERAMIC 0.1MF/25V F
C307	1-164-156-11	s	CAPACITOR,CERAMIC 0.1MF/25V F

(EPR-1B BOARD [SUFFIX 14] for MSW RECORDER)

Ref. No. or Q'ty	Part No.	SP	Description
C308	1-164-156-11	s	CAPACITOR,CERAMIC 0.1MF/25V F
C309	1-164-156-11	s	CAPACITOR,CERAMIC 0.1MF/25V F
C310	1-164-156-11	s	CAPACITOR,CERAMIC 0.1MF/25V F
C311	1-164-156-11	s	CAPACITOR,CERAMIC 0.1MF/25V F
C312	1-164-156-11	s	CAPACITOR,CERAMIC 0.1MF/25V F
C313	1-164-156-11	s	CAPACITOR,CERAMIC 0.1MF/25V F
C314	1-164-156-11	s	CAPACITOR,CERAMIC 0.1MF/25V F
C315	1-126-394-11	s	CAPACITOR,ELECT 10MF/16V(CHIP)
C316	1-126-394-11	s	CAPACITOR,ELECT 10MF/16V(CHIP)
C317	1-164-156-11	s	CAPACITOR,CERAMIC 0.1MF/25V F
C318	1-164-156-11	s	CAPACITOR,CERAMIC 0.1MF/25V F
C319	1-164-156-11	s	CAPACITOR,CERAMIC 0.1MF/25V F
C320	1-164-156-11	s	CAPACITOR,CERAMIC 0.1MF/25V F
C321	1-164-156-11	s	CAPACITOR,CERAMIC 0.1MF/25V F
C322	1-164-156-11	s	CAPACITOR,CERAMIC 0.1MF/25V F
C325	1-126-394-11	s	CAPACITOR,ELECT 10MF/16V(CHIP)
C326	1-126-394-11	s	CAPACITOR,ELECT 10MF/16V(CHIP)
C327	1-164-156-11	s	CAPACITOR,CERAMIC 0.1MF/25V F
C328	1-164-156-11	s	CAPACITOR,CERAMIC 0.1MF/25V F
C329	1-164-156-11	s	CAPACITOR,CERAMIC 0.1MF/25V F
C330	1-164-156-11	s	CAPACITOR,CERAMIC 0.1MF/25V F
C331	1-164-156-11	s	CAPACITOR,CERAMIC 0.1MF/25V F
C332	1-164-156-11	s	CAPACITOR,CERAMIC 0.1MF/25V F
C333	1-164-156-11	s	CAPACITOR,CERAMIC 0.1MF/25V F
C334	1-164-156-11	s	CAPACITOR,CERAMIC 0.1MF/25V F
C335	1-164-156-11	s	CAPACITOR,CERAMIC 0.1MF/25V F
C336	1-164-156-11	s	CAPACITOR,CERAMIC 0.1MF/25V F
C337	1-164-156-11	s	CAPACITOR,CERAMIC 0.1MF/25V F
C338	1-164-156-11	s	CAPACITOR,CERAMIC 0.1MF/25V F
C339	1-164-156-11	s	CAPACITOR,CERAMIC 0.1MF/25V F
C340	1-164-156-11	s	CAPACITOR,CERAMIC 0.1MF/25V F
C341	1-164-156-11	s	CAPACITOR,CERAMIC 0.1MF/25V F
C342	1-164-156-11	s	CAPACITOR,CERAMIC 0.1MF/25V F
C344	1-164-156-11	s	CAPACITOR,CERAMIC 0.1MF/25V F
C345	1-164-156-11	s	CAPACITOR,CERAMIC 0.1MF/25V F
C346	1-164-156-11	s	CAPACITOR,CERAMIC 0.1MF/25V F
C401	1-164-156-11	s	CAPACITOR,CERAMIC 0.1MF/25V F
C402	1-164-156-11	s	CAPACITOR,CERAMIC 0.1MF/25V F
C403	1-164-156-11	s	CAPACITOR,CERAMIC 0.1MF/25V F
C404	1-164-156-11	s	CAPACITOR,CERAMIC 0.1MF/25V F
C405	1-164-156-11	s	CAPACITOR,CERAMIC 0.1MF/25V F
C406	1-164-156-11	s	CAPACITOR,CERAMIC 0.1MF/25V F
C407	1-164-156-11	s	CAPACITOR,CERAMIC 0.1MF/25V F
C408	1-164-156-11	s	CAPACITOR,CERAMIC 0.1MF/25V F
C409	1-164-156-11	s	CAPACITOR,CERAMIC 0.1MF/25V F
C410	1-164-156-11	s	CAPACITOR,CERAMIC 0.1MF/25V F
C411	1-164-156-11	s	CAPACITOR,CERAMIC 0.1MF/25V F
C412	1-164-156-11	s	CAPACITOR,CERAMIC 0.1MF/25V F
C413	1-164-156-11	s	CAPACITOR,CERAMIC 0.1MF/25V F
C414	1-164-156-11	s	CAPACITOR,CERAMIC 0.1MF/25V F
C415	1-164-156-11	s	CAPACITOR,CERAMIC 0.1MF/25V F
C416	1-164-156-11	s	CAPACITOR,CERAMIC 0.1MF/25V F
C417	1-164-156-11	s	CAPACITOR,CERAMIC 0.1MF/25V F
C418	1-164-156-11	s	CAPACITOR,CERAMIC 0.1MF/25V F
C419	1-126-394-11	s	CAPACITOR,ELECT 10MF/16V(CHIP)
C420	1-164-156-11	s	CAPACITOR,CERAMIC 0.1MF/25V F
C421	1-126-394-11	s	CAPACITOR,ELECT 10MF/16V(CHIP)
C422	1-164-156-11	s	CAPACITOR,CERAMIC 0.1MF/25V F
C423	1-164-156-11	s	CAPACITOR,CERAMIC 0.1MF/25V F

(EPR-1B BOARD [SUFFIX 14] for MSW RECORDER)

Ref. No. or Q'ty	Part No.	SP	Description
C424	1-164-156-11	s	CAPACITOR,CERAMIC 0.1MF/25V F
C425	1-164-156-11	s	CAPACITOR,CERAMIC 0.1MF/25V F
C426	1-164-156-11	s	CAPACITOR,CERAMIC 0.1MF/25V F
C427	1-164-156-11	s	CAPACITOR,CERAMIC 0.1MF/25V F
C428	1-164-156-11	s	CAPACITOR,CERAMIC 0.1MF/25V F
C429	1-164-156-11	s	CAPACITOR,CERAMIC 0.1MF/25V F
C430	1-164-156-11	s	CAPACITOR,CERAMIC 0.1MF/25V F
C431	1-164-156-11	s	CAPACITOR,CERAMIC 0.1MF/25V F
C432	1-164-156-11	s	CAPACITOR,CERAMIC 0.1MF/25V F
C433	1-164-156-11	s	CAPACITOR,CERAMIC 0.1MF/25V F
C434	1-164-156-11	s	CAPACITOR,CERAMIC 0.1MF/25V F
C435	1-164-156-11	s	CAPACITOR,CERAMIC 0.1MF/25V F
C436	1-164-156-11	s	CAPACITOR,CERAMIC 0.1MF/25V F
C437	1-164-156-11	s	CAPACITOR,CERAMIC 0.1MF/25V F
C438	1-164-156-11	s	CAPACITOR,CERAMIC 0.1MF/25V F
C500	1-164-156-11	s	CAPACITOR,CERAMIC 0.1MF/25V F
C501	1-164-156-11	s	CAPACITOR,CERAMIC 0.1MF/25V F
C502	1-162-905-11	s	CAPACITOR,CERAMIC 1PF/50V (CK)
C503	1-137-910-11	s	CAPACITOR,TANTALUM ELECT 10MF
C504	1-164-156-11	s	CAPACITOR,CERAMIC 0.1MF/25V F
C505	1-164-156-11	s	CAPACITOR,CERAMIC 0.1MF/25V F
C506	1-164-156-11	s	CAPACITOR,CERAMIC 0.1MF/25V F
C507	1-127-573-11	s	CAPACITOR,CERAMIC 1MFB(2012)
C508	1-164-156-11	s	CAPACITOR,CERAMIC 0.1MF/25V F
C509	1-162-923-11	s	CAPACITOR,CERAMIC 47PF/50V CH
C510	1-164-156-11	s	CAPACITOR,CERAMIC 0.1MF/25V F
C511	1-164-156-11	s	CAPACITOR,CERAMIC 0.1MF/25V F
C512	1-164-156-11	s	CAPACITOR,CERAMIC 0.1MF/25V F
C513	1-164-156-11	s	CAPACITOR,CERAMIC 0.1MF/25V F
C514	1-164-156-11	s	CAPACITOR,CERAMIC 0.1MF/25V F
C515	1-162-915-11	s	CAPACITOR,CERAMIC 10PF/50V CH
C516	1-137-934-11	s	CAPACITOR, CHIP TANTALUM 47MF
C517	1-164-156-11	s	CAPACITOR,CERAMIC 0.1MF/25V F
C518	1-164-156-11	s	CAPACITOR,CERAMIC 0.1MF/25V F
C519	1-164-156-11	s	CAPACITOR,CERAMIC 0.1MF/25V F
C520	1-164-156-11	s	CAPACITOR,CERAMIC 0.1MF/25V F
C521	1-164-156-11	s	CAPACITOR,CERAMIC 0.1MF/25V F
C522	1-137-934-11	s	CAPACITOR, CHIP TANTALUM 47MF
C523	1-164-156-11	s	CAPACITOR,CERAMIC 0.1MF/25V F
C524	1-164-156-11	s	CAPACITOR,CERAMIC 0.1MF/25V F
C525	1-137-934-11	s	CAPACITOR, CHIP TANTALUM 47MF
C526	1-164-156-11	s	CAPACITOR,CERAMIC 0.1MF/25V F
C527	1-164-156-11	s	CAPACITOR,CERAMIC 0.1MF/25V F
C528	1-164-156-11	s	CAPACITOR,CERAMIC 0.1MF/25V F
C529	1-164-156-11	s	CAPACITOR,CERAMIC 0.1MF/25V F
C530	1-164-156-11	s	CAPACITOR,CERAMIC 0.1MF/25V F
C531	1-164-156-11	s	CAPACITOR,CERAMIC 0.1MF/25V F
C532	1-164-156-11	s	CAPACITOR,CERAMIC 0.1MF/25V F
C534	1-164-156-11	s	CAPACITOR,CERAMIC 0.1MF/25V F
C535	1-164-156-11	s	CAPACITOR,CERAMIC 0.1MF/25V F
C536	1-164-156-11	s	CAPACITOR,CERAMIC 0.1MF/25V F
C537	1-126-394-11	s	CAPACITOR,ELECT 10MF/16V(CHIP)
C538	1-164-156-11	s	CAPACITOR,CERAMIC 0.1MF/25V F
C539	1-164-156-11	s	CAPACITOR,CERAMIC 0.1MF/25V F
C540	1-164-156-11	s	CAPACITOR,CERAMIC 0.1MF/25V F
C541	1-164-156-11	s	CAPACITOR,CERAMIC 0.1MF/25V F
C542	1-164-156-11	s	CAPACITOR,CERAMIC 0.1MF/25V F
C543	1-164-156-11	s	CAPACITOR,CERAMIC 0.1MF/25V F
C544	1-128-414-11	s	CAPACITOR ELECT 220MF/6.3V

(EPR-1B BOARD [SUFFIX 14] for MSW RECORDER)

Ref. No. or Q'ty	Part No.	SP	Description
C545	1-164-156-11	s	CAPACITOR,CERAMIC 0.1MF/25V F
C546	1-162-907-11	s	CAPACITOR,CERAMIC 2PF/50V(CK)
C547	1-137-910-11	s	CAPACITOR,TANTALUM ELECT 10MF
C548	1-126-394-11	s	CAPACITOR,ELECT 10MF/16V(CHIP)
C549	1-128-416-11	s	CAPACITOR ELECT 100MF/16V(105C
C600	1-164-156-11	s	CAPACITOR,CERAMIC 0.1MF/25V F
C601	1-165-897-11	s	CAPACIOR, TANTALUM ELECT 22MF
C602	1-164-156-11	s	CAPACITOR,CERAMIC 0.1MF/25V F
C603	1-164-156-11	s	CAPACITOR,CERAMIC 0.1MF/25V F
C604	1-137-934-11	s	CAPACITOR, CHIP TANTALUM 47MF
C605	1-164-156-11	s	CAPACITOR,CERAMIC 0.1MF/25V F
C606	1-164-156-11	s	CAPACITOR,CERAMIC 0.1MF/25V F
C607	1-164-156-11	s	CAPACITOR,CERAMIC 0.1MF/25V F
C608	1-164-156-11	s	CAPACITOR,CERAMIC 0.1MF/25V F
C609	1-164-156-11	s	CAPACITOR,CERAMIC 0.1MF/25V F
C610	1-164-156-11	s	CAPACITOR,CERAMIC 0.1MF/25V F
C611	1-164-156-11	s	CAPACITOR,CERAMIC 0.1MF/25V F
C612	1-162-915-11	s	CAPACITOR,CERAMIC 10PF/50V CH
C613	1-164-156-11	s	CAPACITOR,CERAMIC 0.1MF/25V F
C614	1-164-156-11	s	CAPACITOR,CERAMIC 0.1MF/25V F
C615	1-164-156-11	s	CAPACITOR,CERAMIC 0.1MF/25V F
C616	1-164-156-11	s	CAPACITOR,CERAMIC 0.1MF/25V F
C617	1-164-156-11	s	CAPACITOR,CERAMIC 0.1MF/25V F
C618	1-128-590-11	s	CAPACITOR ELECT 100MF/6.3V(105
C619	1-164-156-11	s	CAPACITOR,CERAMIC 0.1MF/25V F
C620	1-164-156-11	s	CAPACITOR,CERAMIC 0.1MF/25V F
C621	1-164-156-11	s	CAPACITOR,CERAMIC 0.1MF/25V F
C622	1-164-156-11	s	CAPACITOR,CERAMIC 0.1MF/25V F
C623	1-164-156-11	s	CAPACITOR,CERAMIC 0.1MF/25V F
C624	1-162-911-11	s	CAPACITOR,CERAMIC 6PF/50V 1608
C625	1-164-156-11	s	CAPACITOR,CERAMIC 0.1MF/25V F
C626	1-164-156-11	s	CAPACITOR,CERAMIC 0.1MF/25V F
C627	1-164-156-11	s	CAPACITOR,CERAMIC 0.1MF/25V F
C628	1-164-156-11	s	CAPACITOR,CERAMIC 0.1MF/25V F
C629	1-164-156-11	s	CAPACITOR,CERAMIC 0.1MF/25V F
C630	1-164-156-11	s	CAPACITOR,CERAMIC 0.1MF/25V F
C631	1-164-156-11	s	CAPACITOR,CERAMIC 0.1MF/25V F
C632	1-164-156-11	s	CAPACITOR,CERAMIC 0.1MF/25V F
C633	1-164-156-11	s	CAPACITOR,CERAMIC 0.1MF/25V F
C634	1-164-156-11	s	CAPACITOR,CERAMIC 0.1MF/25V F
C635	1-137-910-11	s	CAPACITOR,TANTALUM ELECT 10MF
C636	1-164-156-11	s	CAPACITOR,CERAMIC 0.1MF/25V F
C637	1-164-156-11	s	CAPACITOR,CERAMIC 0.1MF/25V F
C638	1-162-907-11	s	CAPACITOR,CERAMIC 2PF/50V(CK)
C639	1-162-907-11	s	CAPACITOR,CERAMIC 2PF/50V(CK)
C640	1-164-156-11	s	CAPACITOR,CERAMIC 0.1MF/25V F
C642	1-164-230-11	s	CAPACITOR,CERAMIC 220PF/50V
C643	1-164-230-11	s	CAPACITOR,CERAMIC 220PF/50V
C644	1-113-986-11	s	CAPACITOR,TANTALUM 2.2MF/25V
C645	1-113-986-11	s	CAPACITOR,TANTALUM 2.2MF/25V
C646	1-164-156-11	s	CAPACITOR,CERAMIC 0.1MF/25V F
C647	1-164-156-11	s	CAPACITOR,CERAMIC 0.1MF/25V F
C648	1-164-156-11	s	CAPACITOR,CERAMIC 0.1MF/25V F
C701	1-164-156-11	s	CAPACITOR,CERAMIC 0.1MF/25V F
C702	1-126-394-11	s	CAPACITOR,ELECT 10MF/16V(CHIP)
C703	1-164-156-11	s	CAPACITOR,CERAMIC 0.1MF/25V F
C704	1-164-156-11	s	CAPACITOR,CERAMIC 0.1MF/25V F
C705	1-164-156-11	s	CAPACITOR,CERAMIC 0.1MF/25V F
C706	1-164-156-11	s	CAPACITOR,CERAMIC 0.1MF/25V F

(EPR-1B BOARD [SUFFIX 14] for MSW RECORDER)

Ref. No. or Q'ty	Part No.	SP	Description
C707	1-164-156-11	s	CAPACITOR,CERAMIC 0.1MF/25V F
C708	1-164-156-11	s	CAPACITOR,CERAMIC 0.1MF/25V F
C709	1-164-156-11	s	CAPACITOR,CERAMIC 0.1MF/25V F
C710	1-164-156-11	s	CAPACITOR,CERAMIC 0.1MF/25V F
C711	1-164-156-11	s	CAPACITOR,CERAMIC 0.1MF/25V F
C712	1-164-156-11	s	CAPACITOR,CERAMIC 0.1MF/25V F
C713	1-164-156-11	s	CAPACITOR,CERAMIC 0.1MF/25V F
C714	1-164-156-11	s	CAPACITOR,CERAMIC 0.1MF/25V F
C715	1-164-156-11	s	CAPACITOR,CERAMIC 0.1MF/25V F
C716	1-164-156-11	s	CAPACITOR,CERAMIC 0.1MF/25V F
C717	1-164-156-11	s	CAPACITOR,CERAMIC 0.1MF/25V F
C801	1-164-156-11	s	CAPACITOR,CERAMIC 0.1MF/25V F
C802	1-164-156-11	s	CAPACITOR,CERAMIC 0.1MF/25V F
C803	1-164-156-11	s	CAPACITOR,CERAMIC 0.1MF/25V F
C805	1-164-156-11	s	CAPACITOR,CERAMIC 0.1MF/25V F
C806	1-164-156-11	s	CAPACITOR,CERAMIC 0.1MF/25V F
C808	1-164-156-11	s	CAPACITOR,CERAMIC 0.1MF/25V F
C810	1-164-156-11	s	CAPACITOR,CERAMIC 0.1MF/25V F
C901	1-126-394-11	s	CAPACITOR,ELECT 10MF/16V(CHIP)
C902	1-126-394-11	s	CAPACITOR,ELECT 10MF/16V(CHIP)
C903	1-164-156-11	s	CAPACITOR,CERAMIC 0.1MF/25V F
C904	1-164-156-11	s	CAPACITOR,CERAMIC 0.1MF/25V F
C905	1-164-156-11	s	CAPACITOR,CERAMIC 0.1MF/25V F
C906	1-164-156-11	s	CAPACITOR,CERAMIC 0.1MF/25V F
C907	1-164-156-11	s	CAPACITOR,CERAMIC 0.1MF/25V F
C908	1-164-156-11	s	CAPACITOR,CERAMIC 0.1MF/25V F
C909	1-164-156-11	s	CAPACITOR,CERAMIC 0.1MF/25V F
C910	1-164-156-11	s	CAPACITOR,CERAMIC 0.1MF/25V F
C911	1-164-156-11	s	CAPACITOR,CERAMIC 0.1MF/25V F
C912	1-164-156-11	s	CAPACITOR,CERAMIC 0.1MF/25V F
C913	1-164-156-11	s	CAPACITOR,CERAMIC 0.1MF/25V F
C914	1-164-156-11	s	CAPACITOR,CERAMIC 0.1MF/25V F
C915	1-164-156-11	s	CAPACITOR,CERAMIC 0.1MF/25V F
C916	1-164-156-11	s	CAPACITOR,CERAMIC 0.1MF/25V F
CN1	1-580-789-21	o	PIN,CONNECTOR (SMD) 6P
CN500	1-764-243-11	o	CONNECTOR (COAXIAL)
CN501	1-764-243-11	o	CONNECTOR (COAXIAL)
CN600	1-764-243-11	o	CONNECTOR (COAXIAL)
CN601	1-764-243-11	o	CONNECTOR (COAXIAL)
D600	8-719-820-41	s	DIODE 1SS302
D601	8-719-820-41	s	DIODE 1SS302
D602	8-719-820-41	s	DIODE 1SS302
D603	8-719-820-41	s	DIODE 1SS302
F1	⚠ 1-576-270-11	s	FUSE CHIP 4A/125V (6125)
F2	⚠ 1-576-270-11	s	FUSE CHIP 4A/125V (6125)
F3	⚠ 1-576-270-11	s	FUSE CHIP 4A/125V (6125)
FB500	1-414-864-11	s	INDUCTOR, MICRO (CHIP TYPE)
FB501	1-414-864-11	s	INDUCTOR, MICRO (CHIP TYPE)
FB502	1-414-864-11	s	INDUCTOR, MICRO (CHIP TYPE)
FB503	1-414-864-11	s	INDUCTOR, MICRO (CHIP TYPE)
FB504	1-414-864-11	s	INDUCTOR, MICRO (CHIP TYPE)
FB505	1-414-864-11	s	INDUCTOR, MICRO (CHIP TYPE)
FB506	1-414-864-11	s	INDUCTOR, MICRO (CHIP TYPE)
FB507	1-414-864-11	s	INDUCTOR, MICRO (CHIP TYPE)
FB508	1-414-864-11	s	INDUCTOR, MICRO (CHIP TYPE)
FB600	1-414-864-11	s	INDUCTOR, MICRO (CHIP TYPE)
FB601	1-414-864-11	s	INDUCTOR, MICRO (CHIP TYPE)
FB602	1-414-864-11	s	INDUCTOR, MICRO (CHIP TYPE)

(EPR-1B BOARD [SUFFIX 14] for MSW RECORDER)

Ref. No. or Q'ty	Part No.	SP	Description
FB603	1-414-864-11	s	INDUCTOR, MICRO (CHIP TYPE)
IC1	8-759-523-81	s	IC TC74VHC08FT(EL)
IC2	8-759-533-85	s	IC L88M05T-FA-TL
IC100	8-759-392-77	s	IC SN74LVC245APW (E20)
IC101	8-759-549-15	s	IC SN74LV245APWR
IC102	8-759-549-15	s	IC SN74LV245APWR
IC103	8-759-392-77	s	IC SN74LVC245APW (E20)
IC104	8-759-524-07	s	IC TC74VHC138FT(EL)
IC105	8-759-549-15	s	IC SN74LV245APWR
IC106	8-759-549-15	s	IC SN74LV245APWR
IC107	8-759-549-15	s	IC SN74LV245APWR
IC109	8-759-524-07	s	IC TC74VHC138FT(EL)
IC111	8-752-392-03	s	IC CXD1095BR
IC112	8-759-523-81	s	IC TC74VHC08FT(EL)
IC113	8-759-523-94	s	IC TC74VHC32FT(EL)
IC114	8-759-549-01	s	IC SN74LV125APWR
IC115	8-759-549-15	s	IC SN74LV245APWR
IC200	8-759-696-35	s	IC TPS7101QDR
IC300	8-759-656-31	o	IC CXD9094AR
IC301	8-759-640-93	o	IC CXD9095AR
IC304	6-702-238-11	s	IC HY57V643220CT-7TR
IC305	8-759-491-46	s	IC TC74VHCT04AFT (EL)
IC401	6-702-238-11	s	IC HY57V643220CT-7TR
IC500	8-759-490-41	s	IC TC74VHCT541AFT(EL)
IC501	8-759-251-40	s	IC MB88E346PFV-G-BND-ER
IC502	8-759-549-01	s	IC SN74LV125APWR
IC503	8-752-078-34	s	IC CXB1342R
IC504	8-759-549-15	s	IC SN74LV245APWR
IC505	8-759-549-15	s	IC SN74LV245APWR
IC506	8-759-460-72	s	IC BA033FP
IC507	8-759-337-40	s	IC NJM2904V(TE2)
IC508	8-759-533-85	s	IC L88M05T-FA-TL
IC600	8-752-078-32	s	IC CXB1341R
IC601	8-759-337-40	s	IC NJM2904V(TE2)
IC602	8-759-523-95	s	IC TC74VHC74FT(EL)
IC603	8-759-447-77	s	IC TC7WH74FU (TE12R)
IC604	8-759-491-46	s	IC TC74VHCT04AFT (EL)
IC605	8-759-523-96	s	IC TC74VHC86FT (EL)
IC701	8-759-392-77	s	IC SN74LVC245APW (E20)
IC702	8-759-524-52	s	IC TC74VHC574FT(EL)
IC703	8-759-524-52	s	IC TC74VHC574FT(EL)
IC704	8-759-524-52	s	IC TC74VHC574FT(EL)
IC705	8-759-392-77	s	IC SN74LVC245APW (E20)
IC706	8-759-549-15	s	IC SN74LV245APWR
IC708	8-759-549-15	s	IC SN74LV245APWR
IC709	8-759-549-15	s	IC SN74LV245APWR
IC710	8-759-524-29	s	IC TC74VHC257FT(EL)
IC711	8-759-524-10	s	IC TC74VHC157FT (EL)
IC712	8-759-524-10	s	IC TC74VHC157FT (EL)
IC714	8-759-549-15	s	IC SN74LV245APWR
IC715	8-759-549-15	s	IC SN74LV245APWR
IC716	8-759-475-47	s	IC TC74LCX244FT(EL)
IC717	8-759-392-77	s	IC SN74LVC245APW (E20)
IC718	8-759-524-10	s	IC TC74VHC157FT (EL)
IC813	8-759-712-31	s	IC SN65LVDT388DBTR
IC814	8-759-712-31	s	IC SN65LVDT388DBTR
IC816	8-759-712-31	s	IC SN65LVDT388DBTR
IC817	8-759-712-32	s	IC SN65LVDS389DBTR

(EPR-1B BOARD [SUFFIX 14] for MSW RECORDER)

Ref. No. or Q'ty	Part No.	SP	Description
IC818	8-759-712-32	s	IC SN65LVDS389DBTR
IC819	8-759-712-32	s	IC SN65LVDS389DBTR
IC820	8-759-524-10	s	IC TC74VHC157FT (EL)
IC902	8-759-524-27	s	IC TC74VHC244FT(EL)
L1	1-406-864-21	s	COIL,CHOKE 4.7UH
L100	1-410-803-11	s	INDUCTOR,CHIP 0.047UH (3225)
L101	1-410-803-11	s	INDUCTOR,CHIP 0.047UH (3225)
L304	1-410-803-11	s	INDUCTOR,CHIP 0.047UH (3225)
L500	1-410-797-11	s	CHIP INDUCTOR 0.015UH (3225)
L700	1-410-803-11	s	INDUCTOR,CHIP 0.047UH (3225)
L701	1-410-803-11	s	INDUCTOR,CHIP 0.047UH (3225)
L800	1-410-803-11	s	INDUCTOR,CHIP 0.047UH (3225)
L801	1-410-803-11	s	INDUCTOR,CHIP 0.047UH (3225)
Q1	8-729-928-81	s	TRANSISTOR DTC144EE
Q51	8-729-140-63	s	TRANSISTOR 2SA1611-M5M6
Q52	8-729-045-53	s	TRANSISTOR SI4431DY-T1
Q500	8-729-140-63	s	TRANSISTOR 2SA1611-M5M6
Q501	8-729-043-92	s	TRANSISTOR 2SC5084-0(TE85L)
Q502	8-729-043-92	s	TRANSISTOR 2SC5084-0(TE85L)
Q503	8-729-043-92	s	TRANSISTOR 2SC5084-0(TE85L)
Q600	8-729-143-13	s	TRANSISTOR 2SC4176-B34
Q601	8-729-043-92	s	TRANSISTOR 2SC5084-0(TE85L)
Q602	8-729-143-13	s	TRANSISTOR 2SC4176-B34
Q603	8-729-140-63	s	TRANSISTOR 2SA1611-M5M6
Q604	8-729-043-92	s	TRANSISTOR 2SC5084-0(TE85L)
Q605	8-729-043-92	s	TRANSISTOR 2SC5084-0(TE85L)
Q606	8-729-043-92	s	TRANSISTOR 2SC5084-0(TE85L)
R51	1-218-692-11	s	RESISTOR,CHIP 1.0K 1/16W(1608)
R52	1-218-692-11	s	RESISTOR,CHIP 1.0K 1/16W(1608)
R53	1-218-680-11	s	RESISTOR,CHIP 330 1/16W(1608)
R54	1-218-680-11	s	RESISTOR,CHIP 330 1/16W(1608)
R100	1-218-740-11	s	RESISTOR,CHIP 100K 1/16W(1608)
R101	1-218-740-11	s	RESISTOR,CHIP 100K 1/16W(1608)
R102	1-218-708-11	s	RESISTOR,CHIP 4.7K 1/16W(1608)
R104	1-216-864-11	s	CONDUCTOR, CHIP (1608)
R106	1-218-740-11	s	RESISTOR,CHIP 100K 1/16W(1608)
R107	1-216-864-11	s	CONDUCTOR, CHIP (1608)
R108	1-216-864-11	s	CONDUCTOR, CHIP (1608)
R109	1-218-652-11	s	RESISTOR,CHIP 22 1/16W (1608)
R110	1-218-652-11	s	RESISTOR,CHIP 22 1/16W (1608)
R111	1-218-660-91	s	RESISTOR,CHIP 47 1/16W (1608)
R112	1-218-660-91	s	RESISTOR,CHIP 47 1/16W (1608)
R113	1-218-660-91	s	RESISTOR,CHIP 47 1/16W (1608)
R114	1-218-660-91	s	RESISTOR,CHIP 47 1/16W (1608)
R115	1-218-660-91	s	RESISTOR,CHIP 47 1/16W (1608)
R116	1-218-660-91	s	RESISTOR,CHIP 47 1/16W (1608)
R119	1-216-864-11	s	CONDUCTOR, CHIP (1608)
R120	1-216-864-11	s	CONDUCTOR, CHIP (1608)
R121	1-216-864-11	s	CONDUCTOR, CHIP (1608)
R122	1-216-864-11	s	CONDUCTOR, CHIP (1608)
R124	1-216-864-11	s	CONDUCTOR, CHIP (1608)
R125	1-216-864-11	s	CONDUCTOR, CHIP (1608)
R126	1-216-864-11	s	CONDUCTOR, CHIP (1608)
R200	1-218-748-11	s	RESISTOR,CHIP 220K 1/16W(1608)
R201	1-218-680-11	s	RESISTOR,CHIP 330 1/16W(1608)
R202	1-218-726-11	s	RESISTOR CHIP 27K 1/16W (1608)
R203	1-218-740-11	s	RESISTOR,CHIP 100K 1/16W(1608)
R204	1-218-716-11	s	RESISTOR,CHIP 10K 1/16W(1608)

(EPR-1B BOARD [SUFFIX 14] for MSW RECORDER)

Ref. No. or Q'ty	Part No.	SP	Description
R205	1-216-864-11	s	CONDUCTOR, CHIP (1608)
R206	1-218-660-91	s	RESISTOR,CHIP 47 1/16W (1608)
R207	1-218-660-91	s	RESISTOR,CHIP 47 1/16W (1608)
R208	1-218-668-11	s	RESISTOR,CHIP 100 1/16W (1608)
R209	1-216-864-11	s	CONDUCTOR, CHIP (1608)
R210	1-216-864-11	s	CONDUCTOR, CHIP (1608)
R211	1-216-864-11	s	CONDUCTOR, CHIP (1608)
R212	1-216-864-11	s	CONDUCTOR, CHIP (1608)
R213	1-216-864-11	s	CONDUCTOR, CHIP (1608)
R214	1-216-864-11	s	CONDUCTOR, CHIP (1608)
R215	1-216-864-11	s	CONDUCTOR, CHIP (1608)
R216	1-218-655-91	s	RESISTOR,CHIP 30 1/16W(1608)
R300	1-216-864-11	s	CONDUCTOR, CHIP (1608)
R301	1-216-864-11	s	CONDUCTOR, CHIP (1608)
R302	1-218-668-11	s	RESISTOR,CHIP 100 1/16W (1608)
R303	1-218-668-11	s	RESISTOR,CHIP 100 1/16W (1608)
R305	1-216-864-11	s	CONDUCTOR, CHIP (1608)
R306	1-216-864-11	s	CONDUCTOR, CHIP (1608)
R307	1-218-716-11	s	RESISTOR,CHIP 10K 1/16W(1608)
R308	1-216-864-11	s	CONDUCTOR, CHIP (1608)
R309	1-218-660-91	s	RESISTOR,CHIP 47 1/16W (1608)
R310	1-218-660-91	s	RESISTOR,CHIP 47 1/16W (1608)
R311	1-218-660-91	s	RESISTOR,CHIP 47 1/16W (1608)
R312	1-218-660-91	s	RESISTOR,CHIP 47 1/16W (1608)
R313	1-216-864-11	s	CONDUCTOR, CHIP (1608)
R314	1-218-660-91	s	RESISTOR,CHIP 47 1/16W (1608)
R315	1-218-660-91	s	RESISTOR,CHIP 47 1/16W (1608)
R316	1-216-864-11	s	CONDUCTOR, CHIP (1608)
R317	1-216-864-11	s	CONDUCTOR, CHIP (1608)
R318	1-216-864-11	s	CONDUCTOR, CHIP (1608)
R319	1-216-864-11	s	CONDUCTOR, CHIP (1608)
R320	1-216-864-11	s	CONDUCTOR, CHIP (1608)
R321	1-218-716-11	s	RESISTOR,CHIP 10K 1/16W(1608)
R322	1-218-716-11	s	RESISTOR,CHIP 10K 1/16W(1608)
R323	1-218-660-91	s	RESISTOR,CHIP 47 1/16W (1608)
R324	1-218-660-91	s	RESISTOR,CHIP 47 1/16W (1608)
R325	1-216-864-11	s	CONDUCTOR, CHIP (1608)
R326	1-216-864-11	s	CONDUCTOR, CHIP (1608)
R327	1-218-660-91	s	RESISTOR,CHIP 47 1/16W (1608)
R328	1-216-864-11	s	CONDUCTOR, CHIP (1608)
R330	1-216-864-11	s	CONDUCTOR, CHIP (1608)
R331	1-218-668-11	s	RESISTOR,CHIP 100 1/16W (1608)
R332	1-216-864-11	s	CONDUCTOR, CHIP (1608)
R333	1-216-864-11	s	CONDUCTOR, CHIP (1608)
R334	1-216-864-11	s	CONDUCTOR, CHIP (1608)
R335	1-218-660-91	s	RESISTOR,CHIP 47 1/16W (1608)
R337	1-218-668-11	s	RESISTOR,CHIP 100 1/16W (1608)
R338	1-218-668-11	s	RESISTOR,CHIP 100 1/16W (1608)
R339	1-218-668-11	s	RESISTOR,CHIP 100 1/16W (1608)
R341	1-216-864-11	s	CONDUCTOR, CHIP (1608)
R346	1-216-864-11	s	CONDUCTOR, CHIP (1608)
R347	1-216-864-11	s	CONDUCTOR, CHIP (1608)
R348	1-216-864-11	s	CONDUCTOR, CHIP (1608)
R349	1-216-864-11	s	CONDUCTOR, CHIP (1608)
R350	1-218-716-11	s	RESISTOR,CHIP 10K 1/16W(1608)
R351	1-218-700-11	s	RESISTOR,CHIP 2.2K 1/16W(1608)
R352	1-218-716-11	s	RESISTOR,CHIP 10K 1/16W(1608)
R353	1-216-864-11	s	CONDUCTOR, CHIP (1608)
R354	1-216-864-11	s	CONDUCTOR, CHIP (1608)

(EPR-1B BOARD [SUFFIX 14] for MSW RECORDER)

Ref. No. or Q'ty	Part No.	SP	Description
R355	1-216-864-11	s	CONDUCTOR, CHIP (1608)
R356	1-216-864-11	s	CONDUCTOR, CHIP (1608)
R357	1-216-864-11	s	CONDUCTOR, CHIP (1608)
R358	1-216-864-11	s	CONDUCTOR, CHIP (1608)
R373	1-216-864-11	s	CONDUCTOR, CHIP (1608)
R400	1-218-668-11	s	RESISTOR,CHIP 100 1/16W (1608)
R401	1-218-668-11	s	RESISTOR,CHIP 100 1/16W (1608)
R402	1-218-668-11	s	RESISTOR,CHIP 100 1/16W (1608)
R403	1-216-864-11	s	CONDUCTOR, CHIP (1608)
R405	1-216-864-11	s	CONDUCTOR, CHIP (1608)
R409	1-218-692-11	s	RESISTOR,CHIP 1.0K 1/16W(1608)
R500	1-218-740-11	s	RESISTOR,CHIP 100K 1/16W(1608)
R501	1-218-740-11	s	RESISTOR,CHIP 100K 1/16W(1608)
R502	1-218-740-11	s	RESISTOR,CHIP 100K 1/16W(1608)
R505	1-218-740-11	s	RESISTOR,CHIP 100K 1/16W(1608)
R506	1-218-718-11	s	RESISTOR CHIP 12K 1/16W (1608)
R508	1-218-665-11	s	RESISTOR,CHIP 75 1/16W (1608)
R509	1-218-665-11	s	RESISTOR,CHIP 75 1/16W (1608)
R510	1-218-665-11	s	RESISTOR,CHIP 75 1/16W (1608)
R511	1-218-684-11	s	RESISTOR,CHIP 470 1/16W (1608)
R512	1-216-864-11	s	CONDUCTOR, CHIP (1608)
R513	1-218-694-11	s	RESISTOR,CHIP 1.2K1/16W(1608)
R515	1-218-711-11	s	RESISTOR,METAL 6.2K 1/16W
R516	1-218-701-11	s	RESISTOR,CHIP 2.4K 1/16W(1608)
R517	1-218-710-11	s	RESISTOR,CHIP 5.6K 1/16W(1608)
R518	1-218-678-11	s	RESISTOR CHIP 270 1/16W (1608)
R519	1-218-660-91	s	RESISTOR,CHIP 47 1/16W (1608)
R520	1-218-700-11	s	RESISTOR,CHIP 2.2K 1/16W(1608)
R521	1-218-712-11	s	RESISTOR,METAL 6.8K 1/16W
R523	1-218-680-11	s	RESISTOR,CHIP 330 1/16W(1608)
R527	1-218-680-11	s	RESISTOR,CHIP 330 1/16W(1608)
R530	1-218-700-11	s	RESISTOR,CHIP 2.2K 1/16W(1608)
R531	1-218-700-11	s	RESISTOR,CHIP 2.2K 1/16W(1608)
R532	1-218-644-11	s	RESISTOR,CHIP 10 1/16W
R533	1-218-644-11	s	RESISTOR,CHIP 10 1/16W
R534	1-218-644-11	s	RESISTOR,CHIP 10 1/16W
R535	1-218-644-11	s	RESISTOR,CHIP 10 1/16W
R536	1-218-678-11	s	RESISTOR CHIP 270 1/16W (1608)
R537	1-218-678-11	s	RESISTOR CHIP 270 1/16W (1608)
R538	1-218-653-11	s	RESISTOR,CHIP 24 1/16W (1608)
R539	1-218-659-11	s	RESISTOR,CHIP 43 1/16W (1608)
R540	1-218-660-91	s	RESISTOR,CHIP 47 1/16W (1608)
R541	1-218-660-91	s	RESISTOR,CHIP 47 1/16W (1608)
R543	1-218-664-11	s	RESISTOR,CHIP 68 1/16W (1608)
R544	1-218-653-11	s	RESISTOR,CHIP 24 1/16W (1608)
R545	1-218-690-11	s	RESISTOR,CHIP 820 1/16W (1608)
R546	1-218-660-91	s	RESISTOR,CHIP 47 1/16W (1608)
R547	1-218-678-11	s	RESISTOR CHIP 270 1/16W (1608)
R548	1-218-692-11	s	RESISTOR,CHIP 1.0K 1/16W(1608)
R549	1-218-664-11	s	RESISTOR,CHIP 68 1/16W (1608)
R550	1-218-652-11	s	RESISTOR,CHIP 22 1/16W (1608)
R600	1-218-668-11	s	RESISTOR,CHIP 100 1/16W (1608)
R601	1-218-668-11	s	RESISTOR,CHIP 100 1/16W (1608)
R603	1-218-720-11	s	RESISTOR,CHIP 15K 1/16W(1608)
R604	1-218-720-11	s	RESISTOR,CHIP 15K 1/16W(1608)
R606	1-218-718-11	s	RESISTOR CHIP 12K 1/16W (1608)
R608	1-218-696-11	s	RESISTOR,CHIP 1.5K 1/16W(1608)
R609	1-218-684-11	s	RESISTOR,CHIP 470 1/16W (1608)
R610	1-218-711-11	s	RESISTOR,METAL 6.2K 1/16W

(EPR-1B BOARD [SUFFIX 14] for MSW RECORDER)

Ref. No. or Q'ty	Part No.	SP	Description
R611	1-218-692-11	s	RESISTOR,CHIP 1.0K 1/16W(1608)
R612	1-218-701-11	s	RESISTOR,CHIP 2.4K 1/16W(1608)
R613	1-218-710-11	s	RESISTOR,CHIP 5.6K 1/16W(1608)
R614	1-218-678-11	s	RESISTOR CHIP 270 1/16W (1608)
R615	1-218-660-91	s	RESISTOR,CHIP 47 1/16W (1608)
R617	1-218-678-11	s	RESISTOR CHIP 270 1/16W (1608)
R618	1-218-678-11	s	RESISTOR CHIP 270 1/16W (1608)
R619	1-218-660-91	s	RESISTOR,CHIP 47 1/16W (1608)
R620	1-218-674-11	s	RESISTOR CHIP 180 1/16W (1608)
R621	1-218-660-91	s	RESISTOR,CHIP 47 1/16W (1608)
R622	1-218-678-11	s	RESISTOR CHIP 270 1/16W (1608)
R623	1-218-664-11	s	RESISTOR,CHIP 68 1/16W (1608)
R624	1-218-653-11	s	RESISTOR,CHIP 24 1/16W (1608)
R625	1-218-659-11	s	RESISTOR,CHIP 43 1/16W (1608)
R626	1-218-674-11	s	RESISTOR CHIP 180 1/16W (1608)
R627	1-218-660-91	s	RESISTOR,CHIP 47 1/16W (1608)
R628	1-218-711-11	s	RESISTOR,METAL 6.2K 1/16W
R629	1-218-716-11	s	RESISTOR,CHIP 10K 1/16W(1608)
R630	1-218-664-11	s	RESISTOR,CHIP 68 1/16W (1608)
R631	1-218-653-11	s	RESISTOR,CHIP 24 1/16W (1608)
R632	1-218-710-11	s	RESISTOR,CHIP 5.6K 1/16W(1608)
R633	1-218-712-11	s	RESISTOR,METAL 6.8K 1/16W
R634	1-218-660-91	s	RESISTOR,CHIP 47 1/16W (1608)
R635	1-218-660-91	s	RESISTOR,CHIP 47 1/16W (1608)
R637	1-218-660-91	s	RESISTOR,CHIP 47 1/16W (1608)
R638	1-218-700-11	s	RESISTOR,CHIP 2.2K 1/16W(1608)
R639	1-218-660-91	s	RESISTOR,CHIP 47 1/16W (1608)
R640	1-218-672-11	s	RESISTOR,CHIP 150 1/16W(1608)
R641	1-218-660-91	s	RESISTOR,CHIP 47 1/16W (1608)
R643	1-218-672-11	s	RESISTOR,CHIP 150 1/16W(1608)
R644	1-218-700-11	s	RESISTOR,CHIP 2.2K 1/16W(1608)
R645	1-218-692-11	s	RESISTOR,CHIP 1.0K 1/16W(1608)
R646	1-218-700-11	s	RESISTOR,CHIP 2.2K 1/16W(1608)
R647	1-218-664-11	s	RESISTOR,CHIP 68 1/16W (1608)
R648	1-218-664-11	s	RESISTOR,CHIP 68 1/16W (1608)
R649	1-218-692-11	s	RESISTOR,CHIP 1.0K 1/16W(1608)
R650	1-218-722-11	s	RESISTOR, CHIP 18K 1/16W 1608
R651	1-218-722-11	s	RESISTOR, CHIP 18K 1/16W 1608
R652	1-218-740-11	s	RESISTOR,CHIP 100K 1/16W(1608)
R653	1-218-740-11	s	RESISTOR,CHIP 100K 1/16W(1608)
R700	1-216-864-11	s	CONDUCTOR, CHIP (1608)
R705	1-218-676-11	s	RESISTOR,CHIP 220 1/16W(1608)
R707	1-218-716-11	s	RESISTOR,CHIP 10K 1/16W(1608)
R708	1-218-660-91	s	RESISTOR,CHIP 47 1/16W (1608)
R709	1-218-660-91	s	RESISTOR,CHIP 47 1/16W (1608)
R715	1-218-660-91	s	RESISTOR,CHIP 47 1/16W (1608)
R716	1-218-660-91	s	RESISTOR,CHIP 47 1/16W (1608)
R717	1-218-660-91	s	RESISTOR,CHIP 47 1/16W (1608)
R718	1-218-660-91	s	RESISTOR,CHIP 47 1/16W (1608)
R720	1-218-660-91	s	RESISTOR,CHIP 47 1/16W (1608)
R721	1-218-660-91	s	RESISTOR,CHIP 47 1/16W (1608)
R722	1-218-660-91	s	RESISTOR,CHIP 47 1/16W (1608)
R723	1-218-660-91	s	RESISTOR,CHIP 47 1/16W (1608)
R725	1-216-864-11	s	CONDUCTOR, CHIP (1608)
R726	1-218-652-11	s	RESISTOR,CHIP 22 1/16W (1608)
R727	1-218-652-11	s	RESISTOR,CHIP 22 1/16W (1608)
R728	1-218-652-11	s	RESISTOR,CHIP 22 1/16W (1608)
R729	1-218-652-11	s	RESISTOR,CHIP 22 1/16W (1608)
R730	1-218-652-11	s	RESISTOR,CHIP 22 1/16W (1608)

(EPR-1B BOARD [SUFFIX 14] for MSW RECORDER)

Ref. No. or Q'ty	Part No.	SP	Description
R731	1-218-652-11	s	RESISTOR,CHIP 22 1/16W (1608)
R732	1-218-652-11	s	RESISTOR,CHIP 22 1/16W (1608)
R743	1-216-864-11	s	CONDUCTOR, CHIP (1608)
R746	1-216-864-11	s	CONDUCTOR, CHIP (1608)
R749	1-218-668-11	s	RESISTOR,CHIP 100 1/16W (1608)
R750	1-218-668-11	s	RESISTOR,CHIP 100 1/16W (1608)
R760	1-218-644-11	s	RESISTOR,CHIP 10 1/16W
R761	1-218-644-11	s	RESISTOR,CHIP 10 1/16W
R762	1-218-668-11	s	RESISTOR,CHIP 100 1/16W (1608)
R763	1-218-644-11	s	RESISTOR,CHIP 10 1/16W
R764	1-218-644-11	s	RESISTOR,CHIP 10 1/16W
R765	1-218-644-11	s	RESISTOR,CHIP 10 1/16W
R766	1-218-668-11	s	RESISTOR,CHIP 100 1/16W (1608)
R767	1-218-668-11	s	RESISTOR,CHIP 100 1/16W (1608)
R768	1-218-668-11	s	RESISTOR,CHIP 100 1/16W (1608)
R769	1-218-668-11	s	RESISTOR,CHIP 100 1/16W (1608)
R770	1-216-864-11	s	CONDUCTOR, CHIP (1608)
R771	1-216-864-11	s	CONDUCTOR, CHIP (1608)
R772	1-216-864-11	s	CONDUCTOR, CHIP (1608)
R780	1-218-668-11	s	RESISTOR,CHIP 100 1/16W (1608)
R781	1-218-668-11	s	RESISTOR,CHIP 100 1/16W (1608)
R782	1-218-668-11	s	RESISTOR,CHIP 100 1/16W (1608)
R783	1-216-864-11	s	CONDUCTOR, CHIP (1608)
R800	1-218-740-11	s	RESISTOR,CHIP 100K 1/16W(1608)
R801	1-218-740-11	s	RESISTOR,CHIP 100K 1/16W(1608)
R802	1-218-668-11	s	RESISTOR,CHIP 100 1/16W (1608)
R803	1-218-668-11	s	RESISTOR,CHIP 100 1/16W (1608)
R804	1-218-668-11	s	RESISTOR,CHIP 100 1/16W (1608)
R805	1-218-668-11	s	RESISTOR,CHIP 100 1/16W (1608)
R827	1-218-660-91	s	RESISTOR,CHIP 47 1/16W (1608)
R834	1-216-864-11	s	CONDUCTOR, CHIP (1608)
R835	1-216-864-11	s	CONDUCTOR, CHIP (1608)
R836	1-216-864-11	s	CONDUCTOR, CHIP (1608)
R837	1-216-864-11	s	CONDUCTOR, CHIP (1608)
R838	1-216-864-11	s	CONDUCTOR, CHIP (1608)
R901	1-218-644-11	s	RESISTOR,CHIP 10 1/16W
R903	1-218-644-11	s	RESISTOR,CHIP 10 1/16W
R904	1-216-864-11	s	CONDUCTOR, CHIP (1608)
R905	1-218-668-11	s	RESISTOR,CHIP 100 1/16W (1608)
R906	1-218-668-11	s	RESISTOR,CHIP 100 1/16W (1608)
R907	1-218-668-11	s	RESISTOR,CHIP 100 1/16W (1608)
R908	1-216-864-11	s	CONDUCTOR, CHIP (1608)
R909	1-216-864-11	s	CONDUCTOR, CHIP (1608)
R910	1-216-864-11	s	CONDUCTOR, CHIP (1608)
R911	1-216-864-11	s	CONDUCTOR, CHIP (1608)
R912	1-216-864-11	s	CONDUCTOR, CHIP (1608)
R913	1-216-864-11	s	CONDUCTOR, CHIP (1608)
R914	1-216-864-11	s	CONDUCTOR, CHIP (1608)
R915	1-216-864-11	s	CONDUCTOR, CHIP (1608)
R917	1-216-864-11	s	CONDUCTOR, CHIP (1608)
R918	1-216-864-11	s	CONDUCTOR, CHIP (1608)
R919	1-216-864-11	s	CONDUCTOR, CHIP (1608)
R920	1-218-680-11	s	RESISTOR,CHIP 330 1/16W(1608)
R921	1-218-708-11	s	RESISTOR,CHIP 4.7K 1/16W(1608)
R922	1-218-644-11	s	RESISTOR,CHIP 10 1/16W
R924	1-216-864-11	s	CONDUCTOR, CHIP (1608)
RB100	1-234-397-11	s	NETWORK, RES (8 GANG) 100K
RB101	1-234-397-11	s	NETWORK, RES (8 GANG) 100K

(EPR-1B BOARD [SUFFIX 14] for MSW RECORDER)

Ref. No. or Q'ty	Part No.	SP	Description
RB102	1-234-397-11	s	NETWORK, RES (8 GANG) 100K
RB103	1-234-397-11	s	NETWORK, RES (8 GANG) 100K
RB104	1-239-412-11	s	NETWORK, RESISTOR 100 (1608)
RB105	1-239-412-11	s	NETWORK, RESISTOR 100 (1608)
RB106	1-236-907-11	s	RESISTOR BLOCK 100K (1608)
RB108	1-234-397-11	s	NETWORK, RES (8 GANG) 100K
RB109	1-234-397-11	s	NETWORK, RES (8 GANG) 100K
RB110	1-234-397-11	s	NETWORK, RES (8 GANG) 100K
RB111	1-234-397-11	s	NETWORK, RES (8 GANG) 100K
RB112	1-234-397-11	s	NETWORK, RES (8 GANG) 100K
RB113	1-239-621-11	s	NETWORK RESISTOR 22 (1608)
RB114	1-239-621-11	s	NETWORK RESISTOR 22 (1608)
RB115	1-239-621-11	s	NETWORK RESISTOR 22 (1608)
RB116	1-239-621-11	s	NETWORK RESISTOR 22 (1608)
RB117	1-239-621-11	s	NETWORK RESISTOR 22 (1608)
RB118	1-239-621-11	s	NETWORK RESISTOR 22 (1608)
RB120	1-239-409-11	s	RESISTOR NETWORK 47 (1608)
RB121	1-236-907-11	s	RESISTOR BLOCK 100K (1608)
RB122	1-236-907-11	s	RESISTOR BLOCK 100K (1608)
RB200	1-236-904-11	s	RESISTOR NETWORK 1K (1608)
RB201	1-236-904-11	s	RESISTOR NETWORK 1K (1608)
RB202	1-236-904-11	s	RESISTOR NETWORK 1K (1608)
RB300	1-239-409-11	s	RESISTOR NETWORK 47 (1608)
RB301	1-239-409-11	s	RESISTOR NETWORK 47 (1608)
RB302	1-239-409-11	s	RESISTOR NETWORK 47 (1608)
RB303	1-239-409-11	s	RESISTOR NETWORK 47 (1608)
RB500	1-239-407-11	s	NETWORK RESISTOR(CHIP) 330
RB501	1-239-407-11	s	NETWORK RESISTOR(CHIP) 330
RB502	1-239-621-11	s	NETWORK RESISTOR 22 (1608)
RB503	1-239-621-11	s	NETWORK RESISTOR 22 (1608)
RB504	1-239-621-11	s	NETWORK RESISTOR 22 (1608)
RB506	1-239-407-11	s	NETWORK RESISTOR(CHIP) 330
RB600	1-239-412-11	s	NETWORK, RESISTOR 100 (1608)
RB601	1-239-412-11	s	NETWORK, RESISTOR 100 (1608)
RB700	1-234-522-91	s	NETWORK,RESISTOR (8 GANG) 220
RB701	1-234-522-91	s	NETWORK,RESISTOR (8 GANG) 220
RB704	1-239-409-11	s	RESISTOR NETWORK 47 (1608)
RB705	1-239-409-11	s	RESISTOR NETWORK 47 (1608)
RB708	1-239-409-11	s	RESISTOR NETWORK 47 (1608)
RB709	1-239-409-11	s	RESISTOR NETWORK 47 (1608)
RB710	1-239-409-11	s	RESISTOR NETWORK 47 (1608)
RB711	1-239-412-11	s	NETWORK, RESISTOR 100 (1608)
RB712	1-233-477-11	s	NETWORK, RES (8 GANG) 1K
RB713	1-233-477-11	s	NETWORK, RES (8 GANG) 1K
RB715	1-233-477-11	s	NETWORK, RES (8 GANG) 1K
RB717	1-233-270-11	o	RESISTOR, NETWORK (8 GANG) 10K
RB718	1-239-412-11	s	NETWORK, RESISTOR 100 (1608)
RB719	1-239-412-11	s	NETWORK, RESISTOR 100 (1608)
RB720	1-239-412-11	s	NETWORK, RESISTOR 100 (1608)
RB721	1-239-416-11	s	NETWORK,RESISTOR 220 (1608)
RB800	1-239-409-11	s	RESISTOR NETWORK 47 (1608)
RB801	1-239-409-11	s	RESISTOR NETWORK 47 (1608)
RB802	1-239-409-11	s	RESISTOR NETWORK 47 (1608)
RB803	1-239-409-11	s	RESISTOR NETWORK 47 (1608)
RB804	1-239-409-11	s	RESISTOR NETWORK 47 (1608)
RB805	1-233-477-11	s	NETWORK, RES (8 GANG) 1K
RB806	1-233-477-11	s	NETWORK, RES (8 GANG) 1K
RB809	1-236-904-11	s	RESISTOR NETWORK 1K (1608)
RB810	1-239-409-11	s	RESISTOR NETWORK 47 (1608)

(EPR-1B BOARD [SUFFIX 14] for MSW RECORDER)

Ref. No. or Q'ty	Part No.	SP	Description
RB811	1-233-270-11	o	RESISTOR, NETWORK (8 GANG) 10K
RB901	1-236-908-11	s	RESISTOR,NETWORK 10K (3216)
X300	1-781-807-21	s	OSCILLATOR, CRYSTAL (SMD)
X301	1-781-808-21	s	OSCILLATOR, CRYSTAL (SMD)

EPR-1B BOARD [SUFFIX 15, 16] for MSW RECORDER

[Lot No. 381 - 554] MSW-2000, M2000/P, A2000/P
[Lot No. 495 - 554] MSW-M2000E/P

*1: [Lot No. 381 - 554] [Board No. suffix 15, 16]
*2: [Lot No. 421 - 554] [Board No. suffix 16]

Ref. No. or Q'ty	Part No.	SP	Description
1pc	A-8345-214-C	s	MOUNTED CIRCUIT BOARD, EPR-1B
1pc	3-179-084-11	s	LEVER (R), C BOARD
1pc	3-179-085-11	s	LEVER (L), C BOARD
C1	1-127-692-11	s	CAP, CHIP CERAMIC 10MF B 3216
C4	1-107-826-11	s	CAPACITOR,CHIP CERAMIC 0.1MF
C5	1-127-692-11	s	CAP, CHIP CERAMIC 10MF B 3216
C6	1-127-692-11	s	CAP, CHIP CERAMIC 10MF B 3216
C11	1-165-811-11	s	CAPACITOR CHIP CERAMIC 22MF B
C12	1-165-811-11	s	CAPACITOR CHIP CERAMIC 22MF B
C51	1-127-861-11	s	CAP, CERAMIC 2.2MF B (3216)
C52	1-127-861-11	s	CAP, CERAMIC 2.2MF B (3216)
C61	1-127-861-11	s	CAP, CERAMIC 2.2MF B (3216)
C62	1-127-861-11	s	CAP, CERAMIC 2.2MF B (3216)
C100	1-127-692-11	s	CAP, CHIP CERAMIC 10MF B 3216
C101	1-107-826-11	s	CAPACITOR,CHIP CERAMIC 0.1MF
C102	1-127-692-11	s	CAP, CHIP CERAMIC 10MF B 3216
C104	*2 1-107-826-11	s	CAPACITOR,CHIP CERAMIC 0.1MF
C105	1-107-826-11	s	CAPACITOR,CHIP CERAMIC 0.1MF
C106	1-107-826-11	s	CAPACITOR,CHIP CERAMIC 0.1MF
C107	*2 1-107-826-11	s	CAPACITOR,CHIP CERAMIC 0.1MF
C108	1-107-826-11	s	CAPACITOR,CHIP CERAMIC 0.1MF
C109	*2 deleted		
	*1 1-107-826-11	s	CAPACITOR,CHIP CERAMIC 0.1MF
C110	1-107-826-11	s	CAPACITOR,CHIP CERAMIC 0.1MF
C111	1-107-826-11	s	CAPACITOR,CHIP CERAMIC 0.1MF
C112	1-107-826-11	s	CAPACITOR,CHIP CERAMIC 0.1MF
C113	1-107-826-11	s	CAPACITOR,CHIP CERAMIC 0.1MF
C114	*2 1-107-826-11	s	CAPACITOR,CHIP CERAMIC 0.1MF
C115	1-107-826-11	s	CAPACITOR,CHIP CERAMIC 0.1MF
C116	1-107-826-11	s	CAPACITOR,CHIP CERAMIC 0.1MF
C200	1-107-826-11	s	CAPACITOR,CHIP CERAMIC 0.1MF
C201	1-165-811-11	s	CAPACITOR CHIP CERAMIC 22MF B
C202	1-165-811-11	s	CAPACITOR CHIP CERAMIC 22MF B
C203	1-107-826-11	s	CAPACITOR,CHIP CERAMIC 0.1MF
C204	1-107-826-11	s	CAPACITOR,CHIP CERAMIC 0.1MF
C205	1-107-826-11	s	CAPACITOR,CHIP CERAMIC 0.1MF
C206	1-107-826-11	s	CAPACITOR,CHIP CERAMIC 0.1MF
C207	1-107-826-11	s	CAPACITOR,CHIP CERAMIC 0.1MF
C208	1-127-692-11	s	CAP, CHIP CERAMIC 10MF B 3216
C209	1-107-826-11	s	CAPACITOR,CHIP CERAMIC 0.1MF
C210	1-107-826-11	s	CAPACITOR,CHIP CERAMIC 0.1MF
C211	1-107-826-11	s	CAPACITOR,CHIP CERAMIC 0.1MF
C212	1-107-826-11	s	CAPACITOR,CHIP CERAMIC 0.1MF
C213	1-107-826-11	s	CAPACITOR,CHIP CERAMIC 0.1MF
C214	1-107-826-11	s	CAPACITOR,CHIP CERAMIC 0.1MF
C215	1-107-826-11	s	CAPACITOR,CHIP CERAMIC 0.1MF
C216	1-107-826-11	s	CAPACITOR,CHIP CERAMIC 0.1MF
C217	1-107-826-11	s	CAPACITOR,CHIP CERAMIC 0.1MF
C218	1-127-692-11	s	CAP, CHIP CERAMIC 10MF B 3216
C300	1-127-692-11	s	CAP, CHIP CERAMIC 10MF B 3216
C301	1-107-826-11	s	CAPACITOR,CHIP CERAMIC 0.1MF
C302	1-107-826-11	s	CAPACITOR,CHIP CERAMIC 0.1MF
C303	1-107-826-11	s	CAPACITOR,CHIP CERAMIC 0.1MF
C304	1-107-826-11	s	CAPACITOR,CHIP CERAMIC 0.1MF

(EPR-1B BOARD [SUFFIX 15, 16] for MSW RECORDER)

Ref. No. or Q'ty	Part No.	SP	Description
C305	1-107-826-11	s	CAPACITOR,CHIP CERAMIC 0.1MF
C306	1-107-826-11	s	CAPACITOR,CHIP CERAMIC 0.1MF
C307	1-107-826-11	s	CAPACITOR,CHIP CERAMIC 0.1MF
C308	1-107-826-11	s	CAPACITOR,CHIP CERAMIC 0.1MF
C309	1-107-826-11	s	CAPACITOR,CHIP CERAMIC 0.1MF
C310	1-107-826-11	s	CAPACITOR,CHIP CERAMIC 0.1MF
C311	1-107-826-11	s	CAPACITOR,CHIP CERAMIC 0.1MF
C312	1-107-826-11	s	CAPACITOR,CHIP CERAMIC 0.1MF
C313	1-107-826-11	s	CAPACITOR,CHIP CERAMIC 0.1MF
C314	1-107-826-11	s	CAPACITOR,CHIP CERAMIC 0.1MF
C315	1-127-692-11	s	CAP, CHIP CERAMIC 10MF B 3216
C316	1-127-692-11	s	CAP, CHIP CERAMIC 10MF B 3216
C317	1-107-826-11	s	CAPACITOR,CHIP CERAMIC 0.1MF
C318	1-107-826-11	s	CAPACITOR,CHIP CERAMIC 0.1MF
C319	1-107-826-11	s	CAPACITOR,CHIP CERAMIC 0.1MF
C320	1-107-826-11	s	CAPACITOR,CHIP CERAMIC 0.1MF
C321	1-107-826-11	s	CAPACITOR,CHIP CERAMIC 0.1MF
C322	1-107-826-11	s	CAPACITOR,CHIP CERAMIC 0.1MF
C325	1-127-692-11	s	CAP, CHIP CERAMIC 10MF B 3216
C326	1-127-692-11	s	CAP, CHIP CERAMIC 10MF B 3216
C327	1-107-826-11	s	CAPACITOR,CHIP CERAMIC 0.1MF
C328	1-107-826-11	s	CAPACITOR,CHIP CERAMIC 0.1MF
C329	1-107-826-11	s	CAPACITOR,CHIP CERAMIC 0.1MF
C330	1-107-826-11	s	CAPACITOR,CHIP CERAMIC 0.1MF
C331	1-107-826-11	s	CAPACITOR,CHIP CERAMIC 0.1MF
C332	1-107-826-11	s	CAPACITOR,CHIP CERAMIC 0.1MF
C333	1-107-826-11	s	CAPACITOR,CHIP CERAMIC 0.1MF
C334	1-107-826-11	s	CAPACITOR,CHIP CERAMIC 0.1MF
C335	1-107-826-11	s	CAPACITOR,CHIP CERAMIC 0.1MF
C336	1-107-826-11	s	CAPACITOR,CHIP CERAMIC 0.1MF
C337	1-107-826-11	s	CAPACITOR,CHIP CERAMIC 0.1MF
C338	1-107-826-11	s	CAPACITOR,CHIP CERAMIC 0.1MF
C339	1-107-826-11	s	CAPACITOR,CHIP CERAMIC 0.1MF
C340	1-107-826-11	s	CAPACITOR,CHIP CERAMIC 0.1MF
C341	1-107-826-11	s	CAPACITOR,CHIP CERAMIC 0.1MF
C342	1-107-826-11	s	CAPACITOR,CHIP CERAMIC 0.1MF
C344	1-107-826-11	s	CAPACITOR,CHIP CERAMIC 0.1MF
C345	1-107-826-11	s	CAPACITOR,CHIP CERAMIC 0.1MF
C346	1-107-826-11	s	CAPACITOR,CHIP CERAMIC 0.1MF
C354	*2 1-107-826-11	s	CAPACITOR,CHIP CERAMIC 0.1MF
C401	1-107-826-11	s	CAPACITOR,CHIP CERAMIC 0.1MF
C402	1-107-826-11	s	CAPACITOR,CHIP CERAMIC 0.1MF
C403	1-107-826-11	s	CAPACITOR,CHIP CERAMIC 0.1MF
C404	1-107-826-11	s	CAPACITOR,CHIP CERAMIC 0.1MF
C405	1-107-826-11	s	CAPACITOR,CHIP CERAMIC 0.1MF
C406	1-107-826-11	s	CAPACITOR,CHIP CERAMIC 0.1MF
C407	1-107-826-11	s	CAPACITOR,CHIP CERAMIC 0.1MF
C408	1-107-826-11	s	CAPACITOR,CHIP CERAMIC 0.1MF
C409	1-107-826-11	s	CAPACITOR,CHIP CERAMIC 0.1MF
C410	1-107-826-11	s	CAPACITOR,CHIP CERAMIC 0.1MF
C411	1-107-826-11	s	CAPACITOR,CHIP CERAMIC 0.1MF
C412	1-107-826-11	s	CAPACITOR,CHIP CERAMIC 0.1MF
C413	1-107-826-11	s	CAPACITOR,CHIP CERAMIC 0.1MF
C414	1-107-826-11	s	CAPACITOR,CHIP CERAMIC 0.1MF
C415	1-107-826-11	s	CAPACITOR,CHIP CERAMIC 0.1MF
C416	1-107-826-11	s	CAPACITOR,CHIP CERAMIC 0.1MF
C417	1-107-826-11	s	CAPACITOR,CHIP CERAMIC 0.1MF
C418	1-107-826-11	s	CAPACITOR,CHIP CERAMIC 0.1MF
C419	1-127-692-11	s	CAP, CHIP CERAMIC 10MF B 3216

(EPR-1B BOARD [SUFFIX 15, 16] for MSW RECORDER)

Ref. No. or Q'ty	Part No.	SP	Description
C420	1-107-826-11	s	CAPACITOR,CHIP CERAMIC 0.1MF
C421	1-127-692-11	s	CAP, CHIP CERAMIC 10MF B 3216
C422	1-107-826-11	s	CAPACITOR,CHIP CERAMIC 0.1MF
C423	1-107-826-11	s	CAPACITOR,CHIP CERAMIC 0.1MF
C424	1-107-826-11	s	CAPACITOR,CHIP CERAMIC 0.1MF
C425	1-107-826-11	s	CAPACITOR,CHIP CERAMIC 0.1MF
C426	1-107-826-11	s	CAPACITOR,CHIP CERAMIC 0.1MF
C427	1-107-826-11	s	CAPACITOR,CHIP CERAMIC 0.1MF
C428	1-107-826-11	s	CAPACITOR,CHIP CERAMIC 0.1MF
C429	1-107-826-11	s	CAPACITOR,CHIP CERAMIC 0.1MF
C430	1-107-826-11	s	CAPACITOR,CHIP CERAMIC 0.1MF
C431	1-107-826-11	s	CAPACITOR,CHIP CERAMIC 0.1MF
C432	1-107-826-11	s	CAPACITOR,CHIP CERAMIC 0.1MF
C433	1-107-826-11	s	CAPACITOR,CHIP CERAMIC 0.1MF
C434	1-107-826-11	s	CAPACITOR,CHIP CERAMIC 0.1MF
C435	1-107-826-11	s	CAPACITOR,CHIP CERAMIC 0.1MF
C436	1-107-826-11	s	CAPACITOR,CHIP CERAMIC 0.1MF
C437	1-107-826-11	s	CAPACITOR,CHIP CERAMIC 0.1MF
C438	1-107-826-11	s	CAPACITOR,CHIP CERAMIC 0.1MF
C500	1-107-826-11	s	CAPACITOR,CHIP CERAMIC 0.1MF
C501	1-107-826-11	s	CAPACITOR,CHIP CERAMIC 0.1MF
C502	*2 1-127-573-11	s	CAPACITOR,CERAMIC 1MFB(2012)
	*1 1-125-837-91	s	CAPACITOR,CHIP CERAMIC1MF/6.3V
C503	1-127-692-11	s	CAP, CHIP CERAMIC 10MF B 3216
C504	1-107-826-11	s	CAPACITOR,CHIP CERAMIC 0.1MF
C505	1-107-826-11	s	CAPACITOR,CHIP CERAMIC 0.1MF
C506	1-107-826-11	s	CAPACITOR,CHIP CERAMIC 0.1MF
C507	1-127-573-11	s	CAPACITOR,CERAMIC 1MFB(2012)
C508	1-107-826-11	s	CAPACITOR,CHIP CERAMIC 0.1MF
C509	1-162-923-11	s	CAPACITOR,CERAMIC 47PF/50V CH
C510	1-107-826-11	s	CAPACITOR,CHIP CERAMIC 0.1MF
C511	1-107-826-11	s	CAPACITOR,CHIP CERAMIC 0.1MF
C512	1-107-826-11	s	CAPACITOR,CHIP CERAMIC 0.1MF
C513	1-107-826-11	s	CAPACITOR,CHIP CERAMIC 0.1MF
C514	1-107-826-11	s	CAPACITOR,CHIP CERAMIC 0.1MF
C515	1-162-915-11	s	CAPACITOR,CERAMIC 10PF/50V CH
C516	1-165-811-11	s	CAPACITOR CHIP CERAMIC 22MF B
C517	1-107-826-11	s	CAPACITOR,CHIP CERAMIC 0.1MF
C518	1-107-826-11	s	CAPACITOR,CHIP CERAMIC 0.1MF
C519	1-107-826-11	s	CAPACITOR,CHIP CERAMIC 0.1MF
C520	1-107-826-11	s	CAPACITOR,CHIP CERAMIC 0.1MF
C521	1-107-826-11	s	CAPACITOR,CHIP CERAMIC 0.1MF
C522	1-165-811-11	s	CAPACITOR CHIP CERAMIC 22MF B
C523	1-107-826-11	s	CAPACITOR,CHIP CERAMIC 0.1MF
C524	1-107-826-11	s	CAPACITOR,CHIP CERAMIC 0.1MF
C525	1-165-811-11	s	CAPACITOR CHIP CERAMIC 22MF B
C526	1-107-826-11	s	CAPACITOR,CHIP CERAMIC 0.1MF
C527	1-107-826-11	s	CAPACITOR,CHIP CERAMIC 0.1MF
C528	1-107-826-11	s	CAPACITOR,CHIP CERAMIC 0.1MF
C529	1-107-826-11	s	CAPACITOR,CHIP CERAMIC 0.1MF
C530	1-107-826-11	s	CAPACITOR,CHIP CERAMIC 0.1MF
C531	1-107-826-11	s	CAPACITOR,CHIP CERAMIC 0.1MF
C532	1-107-826-11	s	CAPACITOR,CHIP CERAMIC 0.1MF
C534	1-107-826-11	s	CAPACITOR,CHIP CERAMIC 0.1MF
C535	1-107-826-11	s	CAPACITOR,CHIP CERAMIC 0.1MF
C536	1-107-826-11	s	CAPACITOR,CHIP CERAMIC 0.1MF
C537	1-107-826-11	s	CAPACITOR,CHIP CERAMIC 0.1MF
C538	1-107-826-11	s	CAPACITOR,CHIP CERAMIC 0.1MF
C539	1-107-826-11	s	CAPACITOR,CHIP CERAMIC 0.1MF

(EPR-1B BOARD [SUFFIX 15, 16] for MSW RECORDER)

Ref. No. or Q'ty	Part No.	SP	Description
C540	1-107-826-11	s	CAPACITOR,CHIP CERAMIC 0.1MF
C541	1-107-826-11	s	CAPACITOR,CHIP CERAMIC 0.1MF
C542	1-107-826-11	s	CAPACITOR,CHIP CERAMIC 0.1MF
C543	1-107-826-11	s	CAPACITOR,CHIP CERAMIC 0.1MF
C544	1-165-811-11	s	CAPACITOR CHIP CERAMIC 22MF B
C545	1-107-826-11	s	CAPACITOR,CHIP CERAMIC 0.1MF
C546	1-162-907-11	s	CAPACITOR,CERAMIC 2PF/50V(CK)
C547	1-127-692-11	s	CAP, CHIP CERAMIC 10MF B 3216
C548	1-107-826-11	s	CAPACITOR,CHIP CERAMIC 0.1MF
C549	1-165-811-11	s	CAPACITOR CHIP CERAMIC 22MF B
C550	1-165-811-11	s	CAPACITOR CHIP CERAMIC 22MF B
C551	1-165-811-11	s	CAPACITOR CHIP CERAMIC 22MF B
C552	1-165-811-11	s	CAPACITOR CHIP CERAMIC 22MF B
C600	1-107-826-11	s	CAPACITOR,CHIP CERAMIC 0.1MF
C601	1-165-811-11	s	CAPACITOR CHIP CERAMIC 22MF B
C602	1-107-826-11	s	CAPACITOR,CHIP CERAMIC 0.1MF
C603	1-107-826-11	s	CAPACITOR,CHIP CERAMIC 0.1MF
C604	1-165-811-11	s	CAPACITOR CHIP CERAMIC 22MF B
C605	1-107-826-11	s	CAPACITOR,CHIP CERAMIC 0.1MF
C606	1-107-826-11	s	CAPACITOR,CHIP CERAMIC 0.1MF
C607	1-107-826-11	s	CAPACITOR,CHIP CERAMIC 0.1MF
C608	1-107-826-11	s	CAPACITOR,CHIP CERAMIC 0.1MF
C609	1-107-826-11	s	CAPACITOR,CHIP CERAMIC 0.1MF
C610	1-107-826-11	s	CAPACITOR,CHIP CERAMIC 0.1MF
C611	1-107-826-11	s	CAPACITOR,CHIP CERAMIC 0.1MF
C612	1-162-915-11	s	CAPACITOR,CERAMIC 10PF/50V CH
C613	1-107-826-11	s	CAPACITOR,CHIP CERAMIC 0.1MF
C614	1-107-826-11	s	CAPACITOR,CHIP CERAMIC 0.1MF
C615	1-107-826-11	s	CAPACITOR,CHIP CERAMIC 0.1MF
C616	1-107-826-11	s	CAPACITOR,CHIP CERAMIC 0.1MF
C617	1-107-826-11	s	CAPACITOR,CHIP CERAMIC 0.1MF
C618	1-165-811-11	s	CAPACITOR CHIP CERAMIC 22MF B
C619	1-107-826-11	s	CAPACITOR,CHIP CERAMIC 0.1MF
C620	1-107-826-11	s	CAPACITOR,CHIP CERAMIC 0.1MF
C622	1-107-826-11	s	CAPACITOR,CHIP CERAMIC 0.1MF
C623	1-107-826-11	s	CAPACITOR,CHIP CERAMIC 0.1MF
C624	1-162-911-11	s	CAPACITOR,CERAMIC 6PF/50V 1608
C625	1-107-826-11	s	CAPACITOR,CHIP CERAMIC 0.1MF
C626	1-107-826-11	s	CAPACITOR,CHIP CERAMIC 0.1MF
C627	1-107-826-11	s	CAPACITOR,CHIP CERAMIC 0.1MF
C628	1-107-826-11	s	CAPACITOR,CHIP CERAMIC 0.1MF
C629	1-107-826-11	s	CAPACITOR,CHIP CERAMIC 0.1MF
C630	1-107-826-11	s	CAPACITOR,CHIP CERAMIC 0.1MF
C631	1-107-826-11	s	CAPACITOR,CHIP CERAMIC 0.1MF
C632	1-107-826-11	s	CAPACITOR,CHIP CERAMIC 0.1MF
C633	1-107-826-11	s	CAPACITOR,CHIP CERAMIC 0.1MF
C634	1-107-826-11	s	CAPACITOR,CHIP CERAMIC 0.1MF
C635	1-127-692-11	s	CAP, CHIP CERAMIC 10MF B 3216
C636	1-107-826-11	s	CAPACITOR,CHIP CERAMIC 0.1MF
C637	1-107-826-11	s	CAPACITOR,CHIP CERAMIC 0.1MF
C638	1-162-907-11	s	CAPACITOR,CERAMIC 2PF/50V(CK)
C639	1-162-907-11	s	CAPACITOR,CERAMIC 2PF/50V(CK)
C640	1-107-826-11	s	CAPACITOR,CHIP CERAMIC 0.1MF
C642	1-164-230-11	s	CAPACITOR,CERAMIC 220PF/50V
C643	1-164-230-11	s	CAPACITOR,CERAMIC 220PF/50V
C644	1-127-861-11	s	CAP, CERAMIC 2.2MF B (3216)
C645	1-127-861-11	s	CAP, CERAMIC 2.2MF B (3216)
C646	1-107-826-11	s	CAPACITOR,CHIP CERAMIC 0.1MF
C647	1-107-826-11	s	CAPACITOR,CHIP CERAMIC 0.1MF

(EPR-1B BOARD [SUFFIX 15, 16] for MSW RECORDER)

Ref. No. or Q'ty	Part No.	SP	Description
C648	1-107-826-11	s	CAPACITOR,CHIP CERAMIC 0.1MF
C649	1-165-811-11	s	CAPACITOR CHIP CERAMIC 22MF B
C650	1-165-811-11	s	CAPACITOR CHIP CERAMIC 22MF B
C651	1-165-811-11	s	CAPACITOR CHIP CERAMIC 22MF B
C701	1-107-826-11	s	CAPACITOR,CHIP CERAMIC 0.1MF
C702	1-127-692-11	s	CAP, CHIP CERAMIC 10MF B 3216
C703	1-107-826-11	s	CAPACITOR,CHIP CERAMIC 0.1MF
C704	1-107-826-11	s	CAPACITOR,CHIP CERAMIC 0.1MF
C705	1-107-826-11	s	CAPACITOR,CHIP CERAMIC 0.1MF
C706	1-107-826-11	s	CAPACITOR,CHIP CERAMIC 0.1MF
C707	1-107-826-11	s	CAPACITOR,CHIP CERAMIC 0.1MF
C708	1-107-826-11	s	CAPACITOR,CHIP CERAMIC 0.1MF
C709	*2 deleted		
	*1 1-107-826-11	s	CAPACITOR,CHIP CERAMIC 0.1MF
C710	1-107-826-11	s	CAPACITOR,CHIP CERAMIC 0.1MF
C711	1-107-826-11	s	CAPACITOR,CHIP CERAMIC 0.1MF
C712	1-107-826-11	s	CAPACITOR,CHIP CERAMIC 0.1MF
C713	1-107-826-11	s	CAPACITOR,CHIP CERAMIC 0.1MF
C715	1-107-826-11	s	CAPACITOR,CHIP CERAMIC 0.1MF
C716	1-107-826-11	s	CAPACITOR,CHIP CERAMIC 0.1MF
C717	1-107-826-11	s	CAPACITOR,CHIP CERAMIC 0.1MF
C718	1-127-692-11	s	CAP, CHIP CERAMIC 10MF B 3216
C719	*2 1-107-826-11	s	CAPACITOR,CHIP CERAMIC 0.1MF
C720	*2 1-107-826-11	s	CAPACITOR,CHIP CERAMIC 0.1MF
C721	*2 1-127-692-11	s	CAP, CHIP CERAMIC 10MF B 3216
C801	1-107-826-11	s	CAPACITOR,CHIP CERAMIC 0.1MF
C802	1-107-826-11	s	CAPACITOR,CHIP CERAMIC 0.1MF
C803	1-107-826-11	s	CAPACITOR,CHIP CERAMIC 0.1MF
C805	1-107-826-11	s	CAPACITOR,CHIP CERAMIC 0.1MF
C806	1-107-826-11	s	CAPACITOR,CHIP CERAMIC 0.1MF
C808	1-107-826-11	s	CAPACITOR,CHIP CERAMIC 0.1MF
C810	1-107-826-11	s	CAPACITOR,CHIP CERAMIC 0.1MF
C811	1-127-692-11	s	CAP, CHIP CERAMIC 10MF B 3216
C812	1-127-692-11	s	CAP, CHIP CERAMIC 10MF B 3216
C901	1-127-692-11	s	CAP, CHIP CERAMIC 10MF B 3216
C902	1-127-692-11	s	CAP, CHIP CERAMIC 10MF B 3216
C903	1-107-826-11	s	CAPACITOR,CHIP CERAMIC 0.1MF
C904	1-107-826-11	s	CAPACITOR,CHIP CERAMIC 0.1MF
C905	1-107-826-11	s	CAPACITOR,CHIP CERAMIC 0.1MF
C906	1-107-826-11	s	CAPACITOR,CHIP CERAMIC 0.1MF
C907	1-107-826-11	s	CAPACITOR,CHIP CERAMIC 0.1MF
C908	1-107-826-11	s	CAPACITOR,CHIP CERAMIC 0.1MF
C909	1-107-826-11	s	CAPACITOR,CHIP CERAMIC 0.1MF
C910	1-107-826-11	s	CAPACITOR,CHIP CERAMIC 0.1MF
C911	1-107-826-11	s	CAPACITOR,CHIP CERAMIC 0.1MF
C912	1-107-826-11	s	CAPACITOR,CHIP CERAMIC 0.1MF
C913	1-107-826-11	s	CAPACITOR,CHIP CERAMIC 0.1MF
C914	1-107-826-11	s	CAPACITOR,CHIP CERAMIC 0.1MF
C915	1-107-826-11	s	CAPACITOR,CHIP CERAMIC 0.1MF
C916	1-107-826-11	s	CAPACITOR,CHIP CERAMIC 0.1MF
CN1	1-580-789-91	s	PIN, CONNECTOR 6P
CN500	1-764-243-11	o	CONNECTOR (COAXIAL)
CN501	1-764-243-11	o	CONNECTOR (COAXIAL)
CN600	1-764-243-11	o	CONNECTOR (COAXIAL)
CN601	1-764-243-11	o	CONNECTOR (COAXIAL)
D600	8-719-820-41	s	DIODE 1SS302
D601	8-719-820-41	s	DIODE 1SS302
D602	8-719-820-41	s	DIODE 1SS302
D603	8-719-820-41	s	DIODE 1SS302

(EPR-1B BOARD [SUFFIX 15, 16] for MSW RECORDER)

Ref. No. or Q'ty	Part No.	SP	Description
E101	*2 1-535-877-22	s	CHIP,CHECKER (TEST POINT)
E200	*2 deleted		
	*1 1-535-877-22	s	CHIP,CHECKER (TEST POINT)
E201	*2 deleted		
	*1 1-535-877-22	s	CHIP,CHECKER (TEST POINT)
E300	1-535-877-22	s	CHIP,CHECKER (TEST POINT)
E301	1-535-877-22	s	CHIP,CHECKER (TEST POINT)
E500	1-535-877-22	s	CHIP,CHECKER (TEST POINT)
E600	1-535-877-22	s	CHIP,CHECKER (TEST POINT)
E900	*2 deleted		
	*1 1-535-877-22	s	CHIP,CHECKER (TEST POINT)
E1101	*2 1-535-877-22	s	CHIP,CHECKER (TEST POINT)
E1201	*2 1-535-877-22	s	CHIP,CHECKER (TEST POINT)
F1	⚠ 1-576-270-11	s	FUSE CHIP 4A/125V (6125)
F2	⚠ 1-576-270-11	s	FUSE CHIP 4A/125V (6125)
F3	⚠ 1-576-270-11	s	FUSE CHIP 4A/125V (6125)
FB500	1-414-864-11	s	INDUCTOR, MICRO (CHIP TYPE)
FB501	1-414-864-11	s	INDUCTOR, MICRO (CHIP TYPE)
FB502	1-414-864-11	s	INDUCTOR, MICRO (CHIP TYPE)
FB503	1-414-864-11	s	INDUCTOR, MICRO (CHIP TYPE)
FB504	1-414-864-11	s	INDUCTOR, MICRO (CHIP TYPE)
FB505	1-414-864-11	s	INDUCTOR, MICRO (CHIP TYPE)
FB506	1-414-864-11	s	INDUCTOR, MICRO (CHIP TYPE)
FB507	1-414-864-11	s	INDUCTOR, MICRO (CHIP TYPE)
FB508	1-414-864-11	s	INDUCTOR, MICRO (CHIP TYPE)
FB600	1-414-864-11	s	INDUCTOR, MICRO (CHIP TYPE)
FB601	1-414-864-11	s	INDUCTOR, MICRO (CHIP TYPE)
FB602	1-414-864-11	s	INDUCTOR, MICRO (CHIP TYPE)
FB603	1-414-864-11	s	INDUCTOR, MICRO (CHIP TYPE)
IC1	8-759-523-81	s	IC TC74VHC08FT(EL)
IC100	8-759-392-77	s	IC SN74LVC245APW (E20)
IC101	8-759-549-15	s	IC SN74LV245APWR
IC102	8-759-549-15	s	IC SN74LV245APWR
IC103	8-759-392-77	s	IC SN74LVC245APW (E20)
IC104	8-759-524-07	s	IC TC74VHC138FT(EL)
IC105	*2 deleted		
	*1 8-759-549-15	s	IC SN74LV245APWR
IC106	8-759-549-15	s	IC SN74LV245APWR
IC107	8-759-549-15	s	IC SN74LV245APWR
IC108	*2 8-759-523-81	s	IC TC74VHC08FT(EL)
IC109	8-759-524-07	s	IC TC74VHC138FT(EL)
IC111	8-752-392-03	s	IC CXD1095BR
IC112	8-759-523-81	s	IC TC74VHC08FT(EL)
IC113	8-759-523-94	s	IC TC74VHC32FT(EL)
IC114	*2 8-759-497-44	s	IC TC7WH125FU(TE12R)
	*1 8-759-549-01	s	IC SN74LV125APWR
IC115	8-759-549-15	s	IC SN74LV245APWR
IC116	*2 8-759-196-96	s	IC TC7SH08FU (TE85R)
IC200	8-759-696-35	s	IC TPS7101QDR
IC300	8-759-656-31	o	IC CXD9094AR
IC301	8-759-640-93	o	IC CXD9095AR
IC304	6-702-238-11	s	IC HY57V643220CT-7TR
IC305	*2 8-759-531-92	s	IC TC7WH04FU(TE12R)
	*1 8-759-491-46	s	IC TC74VHCT04AFT (EL)
IC400	*2 deleted		
	*1 8-759-836-54	s	IC CXD9139AGF
IC401	6-702-238-11	s	IC HY57V643220CT-7TR
IC500	8-759-490-41	s	IC TC74VHCT541AFT(EL)

(EPR-1B BOARD [SUFFIX 15, 16] for MSW RECORDER)

Ref. No. or Q'ty	Part No.	SP	Description
IC501	8-759-672-76	s	IC AK9813BF-E2
IC502	*2 8-759-497-44	s	IC TC7WH125FU(TE12R)
	*1 8-759-549-01	s	IC SN74LV125APWR
IC503	8-752-078-34	s	IC CXB1342R
IC504	8-759-549-15	s	IC SN74LV245APWR
IC505	8-759-549-15	s	IC SN74LV245APWR
IC506	8-759-460-72	s	IC BA033FP
IC507	8-759-337-40	s	IC NJM2904V(TE2)
IC508	8-759-533-85	s	IC L88M05T-FA-TL
IC600	8-752-078-32	s	IC CXB1341R
IC602	8-759-523-95	s	IC TC74VHC74FT(EL)
IC603	8-759-447-77	s	IC TC7WH74FU (TE12R)
IC604	8-759-491-46	s	IC TC74VHCT04AFT (EL)
IC605	8-759-523-96	s	IC TC74VHC86FT (EL)
IC701	8-759-392-77	s	IC SN74LVC245APW (E20)
IC702	8-759-524-52	s	IC TC74VHC574FT(EL)
IC703	8-759-524-52	s	IC TC74VHC574FT(EL)
IC704	8-759-524-52	s	IC TC74VHC574FT(EL)
IC705	8-759-392-77	s	IC SN74LVC245APW (E20)
IC706	8-759-549-15	s	IC SN74LV245APWR
IC707	*2 8-759-549-15	s	IC SN74LV245APWR
IC708	8-759-524-27	s	IC TC74VHC244FT(EL)
IC709	8-759-549-15	s	IC SN74LV245APWR
IC710	8-759-524-29	s	IC TC74VHC257FT(EL)
IC711	8-759-524-10	s	IC TC74VHC157FT (EL)
IC712	8-759-524-10	s	IC TC74VHC157FT (EL)
IC714	8-759-549-15	s	IC SN74LV245APWR
IC715	8-759-549-15	s	IC SN74LV245APWR
IC716	*2 deleted		
	*1 8-759-679-53	s	IC SN74LVC244APWR
IC717	8-759-392-77	s	IC SN74LVC245APW (E20)
IC718	8-759-524-10	s	IC TC74VHC157FT (EL)
IC813	8-759-712-31	s	IC SN65LVDT388DBTR
IC814	8-759-712-31	s	IC SN65LVDT388DBTR
IC816	8-759-712-31	s	IC SN65LVDT388DBTR
IC817	8-759-712-32	s	IC SN65LVDS389DBTR
IC818	8-759-712-32	s	IC SN65LVDS389DBTR
IC819	8-759-712-32	s	IC SN65LVDS389DBTR
IC820	8-759-524-10	s	IC TC74VHC157FT (EL)
IC901	*2 6-704-718-01	s	IC XC18V02VQG44C
	*1 8-759-678-90	s	IC XC18V02VQ44C
IC902	8-759-524-27	s	IC TC74VHC244FT(EL)
L100	1-412-923-21	s	INDUCTOR CHIP 0.047UH (2520)
L101	1-412-923-21	s	INDUCTOR CHIP 0.047UH (2520)
L304	1-412-923-21	s	INDUCTOR CHIP 0.047UH (2520)
L500	1-414-465-31	s	INDUCTOR, CHIP (J) 15NH
L700	1-412-923-21	s	INDUCTOR CHIP 0.047UH (2520)
L701	1-412-923-21	s	INDUCTOR CHIP 0.047UH (2520)
L702	*2 1-412-923-21	s	INDUCTOR CHIP 0.047UH (2520)
L800	1-412-923-21	s	INDUCTOR CHIP 0.047UH (2520)
L801	1-412-923-21	s	INDUCTOR CHIP 0.047UH (2520)
Q1	8-729-928-81	s	TRANSISTOR DTC144EE
Q51	8-729-928-19	s	TRANSISTOR 2SA1774R
Q52	8-729-047-32	s	TRANSISTOR SI4425DY-T1
Q61	8-729-928-19	s	TRANSISTOR 2SA1774R
Q62	8-729-047-32	s	TRANSISTOR SI4425DY-T1
Q500	8-729-928-19	s	TRANSISTOR 2SA1774R
Q501	8-729-043-92	s	TRANSISTOR 2SC5084-0(TE85L)
Q502	8-729-043-92	s	TRANSISTOR 2SC5084-0(TE85L)

(EPR-1B BOARD [SUFFIX 15, 16] for MSW RECORDER)

Ref. No. or Q'ty	Part No.	SP	Description
Q503	8-729-043-92	s	TRANSISTOR 2SC5084-0(TE85L)
Q600	8-729-043-92	s	TRANSISTOR 2SC5084-0(TE85L)
Q601	8-729-043-92	s	TRANSISTOR 2SC5084-0(TE85L)
Q603	8-729-928-19	s	TRANSISTOR 2SA1774R
Q604	8-729-043-92	s	TRANSISTOR 2SC5084-0(TE85L)
Q605	8-729-043-92	s	TRANSISTOR 2SC5084-0(TE85L)
Q606	8-729-043-92	s	TRANSISTOR 2SC5084-0(TE85L)
R51	1-218-847-11	s	RESISTOR, CHIP 1K 1/10W (1608)
R52	1-218-847-11	s	RESISTOR, CHIP 1K 1/10W (1608)
R53	1-218-835-11	s	RESISTOR,CHIP 330 1/10W (1608)
R54	1-218-835-11	s	RESISTOR,CHIP 330 1/10W (1608)
R61	1-218-847-11	s	RESISTOR, CHIP 1K 1/10W (1608)
R62	1-218-847-11	s	RESISTOR, CHIP 1K 1/10W (1608)
R63	1-218-835-11	s	RESISTOR,CHIP 330 1/10W (1608)
R64	1-218-835-11	s	RESISTOR,CHIP 330 1/10W (1608)
R100	1-218-895-11	s	RESISTOR,CHIP 100K 1/10W(1608)
R101	1-218-895-11	s	RESISTOR,CHIP 100K 1/10W(1608)
R102	1-218-863-11	s	RESISTOR,CHIP 4.7K 1/10W(1608)
R104	1-216-864-11	s	CONDUCTOR, CHIP (1608)
R106	1-218-895-11	s	RESISTOR,CHIP 100K 1/10W(1608)
R107	*2 1-211-977-11	s	RESISTOR,CHIP 22 1/10W (1608)
	*1 1-216-864-11	s	CONDUCTOR, CHIP (1608)
R108	1-216-864-11	s	CONDUCTOR, CHIP (1608)
R109	1-211-977-11	s	RESISTOR,CHIP 22 1/10W (1608)
R110	*2 deleted		
	*1 1-211-977-11	s	RESISTOR,CHIP 22 1/10W (1608)
R111	*2 deleted		
	*1 1-211-985-11	s	RESISTOR,CHIP 47 1/10W (1608)
R112	*2 deleted		
	*1 1-211-985-11	s	RESISTOR,CHIP 47 1/10W (1608)
R113	*2 deleted		
	*1 1-211-985-11	s	RESISTOR,CHIP 47 1/10W (1608)
R114	*2 deleted		
	*1 1-211-985-11	s	RESISTOR,CHIP 47 1/10W (1608)
R115	*2 deleted		
	*1 1-211-985-11	s	RESISTOR,CHIP 47 1/10W (1608)
R116	*2 deleted		
	*1 1-211-985-11	s	RESISTOR,CHIP 47 1/10W (1608)
R119	1-216-864-11	s	CONDUCTOR, CHIP (1608)
R120	1-216-864-11	s	CONDUCTOR, CHIP (1608)
R121	1-216-864-11	s	CONDUCTOR, CHIP (1608)
R122	1-216-864-11	s	CONDUCTOR, CHIP (1608)
R124	*2 deleted		
	*1 1-216-864-11	s	CONDUCTOR, CHIP (1608)
R125	*2 1-216-864-11	s	CONDUCTOR, CHIP (1608)
R126	1-216-864-11	s	CONDUCTOR, CHIP (1608)
R128	*2 1-218-895-11	s	RESISTOR,CHIP 100K 1/10W(1608)
R200	1-218-903-11	s	RESISTOR,CHIP 220K 1/10W(1608)
R201	1-218-835-11	s	RESISTOR,CHIP 330 1/10W (1608)
R202	1-218-881-11	s	RESISTOR, CHIP 27K 1/10W(1608)
R203	1-218-895-11	s	RESISTOR,CHIP 100K 1/10W(1608)
R204	1-218-871-11	s	RESISTOR,CHIP 10K 1/10W (1608)
R205	1-216-864-11	s	CONDUCTOR, CHIP (1608)
R206	1-211-985-11	s	RESISTOR,CHIP 47 1/10W (1608)
R207	1-211-985-11	s	RESISTOR,CHIP 47 1/10W (1608)
R208	1-218-823-11	s	RESISTOR,CHIP 100 1/10W (1608)
R209	1-216-864-11	s	CONDUCTOR, CHIP (1608)
R210	1-216-864-11	s	CONDUCTOR, CHIP (1608)
R211	1-216-864-11	s	CONDUCTOR, CHIP (1608)
R212	1-216-864-11	s	CONDUCTOR, CHIP (1608)

(EPR-1B BOARD [SUFFIX 15, 16] for MSW RECORDER)

Ref. No. or Q'ty	Part No.	SP	Description
R213	1-216-864-11	s	CONDUCTOR, CHIP (1608)
R214	1-216-864-11	s	CONDUCTOR, CHIP (1608)
R215	1-216-864-11	s	CONDUCTOR, CHIP (1608)
R216	1-211-980-11	s	RESISTOR,CHIP 30 1/10W(1608)
R217	1-218-446-11	s	RESISTOR,CHIP 1 (1608)
R218	1-218-446-11	s	RESISTOR,CHIP 1 (1608)
R219	1-218-446-11	s	RESISTOR,CHIP 1 (1608)
R220	*2 1-211-985-11	s	RESISTOR,CHIP 47 1/10W (1608)
R221	*2 1-218-847-11	s	RESISTOR, CHIP 1K 1/10W (1608)
R222	*2 1-218-847-11	s	RESISTOR, CHIP 1K 1/10W (1608)
R300	1-216-864-11	s	CONDUCTOR, CHIP (1608)
R301	1-216-864-11	s	CONDUCTOR, CHIP (1608)
R302	1-218-823-11	s	RESISTOR,CHIP 100 1/10W (1608)
R303	1-218-823-11	s	RESISTOR,CHIP 100 1/10W (1608)
R305	1-216-864-11	s	CONDUCTOR, CHIP (1608)
R306	1-216-864-11	s	CONDUCTOR, CHIP (1608)
R307	1-218-871-11	s	RESISTOR,CHIP 10K 1/10W (1608)
R308	1-216-864-11	s	CONDUCTOR, CHIP (1608)
R309	1-211-985-11	s	RESISTOR,CHIP 47 1/10W (1608)
R310	1-211-985-11	s	RESISTOR,CHIP 47 1/10W (1608)
R311	1-211-985-11	s	RESISTOR,CHIP 47 1/10W (1608)
R312	1-211-985-11	s	RESISTOR,CHIP 47 1/10W (1608)
R313	*2 deleted		
	*1 1-216-864-11	s	CONDUCTOR, CHIP (1608)
R314	1-211-985-11	s	RESISTOR,CHIP 47 1/10W (1608)
R315	1-211-985-11	s	RESISTOR,CHIP 47 1/10W (1608)
R316	1-216-864-11	s	CONDUCTOR, CHIP (1608)
R317	1-216-864-11	s	CONDUCTOR, CHIP (1608)
R318	1-216-864-11	s	CONDUCTOR, CHIP (1608)
R319	1-216-864-11	s	CONDUCTOR, CHIP (1608)
R320	1-216-864-11	s	CONDUCTOR, CHIP (1608)
R321	1-218-871-11	s	RESISTOR,CHIP 10K 1/10W (1608)
R322	1-218-871-11	s	RESISTOR,CHIP 10K 1/10W (1608)
R323	1-211-985-11	s	RESISTOR,CHIP 47 1/10W (1608)
R324	1-211-985-11	s	RESISTOR,CHIP 47 1/10W (1608)
R325	1-216-864-11	s	CONDUCTOR, CHIP (1608)
R326	1-216-864-11	s	CONDUCTOR, CHIP (1608)
R327	1-211-985-11	s	RESISTOR,CHIP 47 1/10W (1608)
R328	1-216-864-11	s	CONDUCTOR, CHIP (1608)
R330	1-216-864-11	s	CONDUCTOR, CHIP (1608)
R331	1-218-823-11	s	RESISTOR,CHIP 100 1/10W (1608)
R332	1-216-864-11	s	CONDUCTOR, CHIP (1608)
R333	1-216-864-11	s	CONDUCTOR, CHIP (1608)
R334	1-216-864-11	s	CONDUCTOR, CHIP (1608)
R335	1-211-985-11	s	RESISTOR,CHIP 47 1/10W (1608)
R337	1-218-823-11	s	RESISTOR,CHIP 100 1/10W (1608)
R338	1-218-823-11	s	RESISTOR,CHIP 100 1/10W (1608)
R339	1-218-823-11	s	RESISTOR,CHIP 100 1/10W (1608)
R341	1-216-864-11	s	CONDUCTOR, CHIP (1608)
R342	*2 1-211-985-11	s	RESISTOR,CHIP 47 1/10W (1608)
R343	*2 1-211-985-11	s	RESISTOR,CHIP 47 1/10W (1608)
R346	1-216-864-11	s	CONDUCTOR, CHIP (1608)
R347	1-216-864-11	s	CONDUCTOR, CHIP (1608)
R348	1-216-864-11	s	CONDUCTOR, CHIP (1608)
R349	1-216-864-11	s	CONDUCTOR, CHIP (1608)
R350	1-218-871-11	s	RESISTOR,CHIP 10K 1/10W (1608)
R351	1-218-855-11	s	RESISTOR,CHIP 2.2K 1/10W(1608)
R352	1-218-871-11	s	RESISTOR,CHIP 10K 1/10W (1608)
R353	*2 deleted		
	*1 1-216-864-11	s	CONDUCTOR, CHIP (1608)

(EPR-1B BOARD [SUFFIX 15, 16] for MSW RECORDER)

Ref. No. or Q'ty	Part No.	SP	Description
R354	*2 deleted		
	*1 1-216-864-11	s	CONDUCTOR, CHIP (1608)
R355	*2 deleted		
	*1 1-216-864-11	s	CONDUCTOR, CHIP (1608)
R356	*2 deleted		
	*1 1-216-864-11	s	CONDUCTOR, CHIP (1608)
R357	*2 deleted		
	*1 1-216-864-11	s	CONDUCTOR, CHIP (1608)
R358	*2 deleted		
	*1 1-216-864-11	s	CONDUCTOR, CHIP (1608)
R373	1-216-864-11	s	CONDUCTOR, CHIP (1608)
R400	1-218-823-11	s	RESISTOR,CHIP 100 1/10W (1608)
R401	1-218-823-11	s	RESISTOR,CHIP 100 1/10W (1608)
R402	1-218-823-11	s	RESISTOR,CHIP 100 1/10W (1608)
R403	*2 deleted		
	*1 1-216-864-11	s	CONDUCTOR, CHIP (1608)
R405	*2 deleted		
	*1 1-216-864-11	s	CONDUCTOR, CHIP (1608)
R409	1-218-847-11	s	RESISTOR, CHIP 1K 1/10W (1608)
R500	1-218-895-11	s	RESISTOR,CHIP 100K 1/10W(1608)
R501	1-218-895-11	s	RESISTOR,CHIP 100K 1/10W(1608)
R502	1-218-895-11	s	RESISTOR,CHIP 100K 1/10W(1608)
R505	1-218-895-11	s	RESISTOR,CHIP 100K 1/10W(1608)
R506	1-218-873-11	s	RESISTOR,CHIP 12K 1/10W (1608)
R508	1-211-990-11	s	RESISTOR,CHIP 75 1/10W (1608)
R509	1-211-990-11	s	RESISTOR,CHIP 75 1/10W (1608)
R510	1-211-990-11	s	RESISTOR,CHIP 75 1/10W (1608)
R511	1-218-839-11	s	RESISTOR,CHIP 470 1/10W (1608)
R512	1-216-864-11	s	CONDUCTOR, CHIP (1608)
R513	*2 1-218-833-11	s	RESISTOR,CHIP 270 1/10W (1608)
	*1 1-218-849-11	s	RESISTOR,CHIP 1.2K 1/10W(1608)
R515	1-218-866-11	s	RESISTOR,CHIP 6.2K 1/10W(1608)
R516	1-218-856-11	s	RESISTOR,CHIP 2.4K 1/10W(1608)
R517	1-218-865-11	s	RESISTOR,CHIP 5.6K 1/10W(1608)
R518	1-218-833-11	s	RESISTOR,CHIP 270 1/10W (1608)
R519	1-211-985-11	s	RESISTOR,CHIP 47 1/10W (1608)
R520	1-218-855-11	s	RESISTOR,CHIP 2.2K 1/10W(1608)
R521	1-218-867-11	s	RESISTOR,CHIP 6.8K 1/10W(1608)
R523	1-218-831-11	s	RESISTOR, CHIP 220 1/10W(1608)
R527	1-218-831-11	s	RESISTOR, CHIP 220 1/10W(1608)
R530	1-218-855-11	s	RESISTOR,CHIP 2.2K 1/10W(1608)
R531	1-218-855-11	s	RESISTOR,CHIP 2.2K 1/10W(1608)
R532	1-211-969-11	s	RESISTOR,CHIP 10 1/10W (1608)
R533	1-211-969-11	s	RESISTOR,CHIP 10 1/10W (1608)
R534	1-211-969-11	s	RESISTOR,CHIP 10 1/10W (1608)
R535	1-211-969-11	s	RESISTOR,CHIP 10 1/10W (1608)
R536	1-218-833-11	s	RESISTOR,CHIP 270 1/10W (1608)
R537	1-218-833-11	s	RESISTOR,CHIP 270 1/10W (1608)
R538	1-211-978-11	s	RESISTOR,CHIP 24 1/10W (1608)
R539	1-211-984-11	s	RESISTOR,CHIP 43 1/10W (1608)
R540	1-211-985-11	s	RESISTOR,CHIP 47 1/10W (1608)
R541	1-211-985-11	s	RESISTOR,CHIP 47 1/10W (1608)
R543	1-211-989-11	s	RESISTOR,CHIP 68 1/10W (1608)
R544	1-211-978-11	s	RESISTOR,CHIP 24 1/10W (1608)
R545	1-218-845-11	s	RESISTOR,CHIP 820 1/10W (1608)
R546	1-211-985-11	s	RESISTOR,CHIP 47 1/10W (1608)
R547	1-218-833-11	s	RESISTOR,CHIP 270 1/10W (1608)
R548	1-218-847-11	s	RESISTOR, CHIP 1K 1/10W (1608)
R549	1-211-989-11	s	RESISTOR,CHIP 68 1/10W (1608)
R550	1-211-977-11	s	RESISTOR,CHIP 22 1/10W (1608)

(EPR-1B BOARD [SUFFIX 15, 16] for MSW RECORDER)

Ref. No. or Q'ty	Part No.	SP	Description
R551	1-218-446-11	s	RESISTOR,CHIP 1 (1608)
R552	1-218-446-11	s	RESISTOR,CHIP 1 (1608)
R553	1-218-446-11	s	RESISTOR,CHIP 1 (1608)
R554	1-218-446-11	s	RESISTOR,CHIP 1 (1608)
R555	1-218-446-11	s	RESISTOR,CHIP 1 (1608)
R556	1-218-446-11	s	RESISTOR,CHIP 1 (1608)
R600	1-218-823-11	s	RESISTOR,CHIP 100 1/10W (1608)
R601	1-218-823-11	s	RESISTOR,CHIP 100 1/10W (1608)
R603	1-218-875-11	s	RESISTOR,CHIP 15K 1/10W (1608)
R604	1-218-875-11	s	RESISTOR,CHIP 15K 1/10W (1608)
R606	1-218-873-11	s	RESISTOR,CHIP 12K 1/10W (1608)
R608	1-218-851-11	s	RESISTOR,CHIP 1.5K 1/10W(1608)
R609	1-218-839-11	s	RESISTOR,CHIP 470 1/10W (1608)
R610	1-218-866-11	s	RESISTOR,CHIP 6.2K 1/10W(1608)
R611	1-218-847-11	s	RESISTOR, CHIP 1K 1/10W (1608)
R612	1-218-856-11	s	RESISTOR,CHIP 2.4K 1/10W(1608)
R613	1-218-865-11	s	RESISTOR,CHIP 5.6K 1/10W(1608)
R614	1-218-833-11	s	RESISTOR,CHIP 270 1/10W (1608)
R617	1-218-833-11	s	RESISTOR,CHIP 270 1/10W (1608)
R618	1-218-833-11	s	RESISTOR,CHIP 270 1/10W (1608)
R619	1-211-985-11	s	RESISTOR,CHIP 47 1/10W (1608)
R620	1-218-839-11	s	RESISTOR,CHIP 470 1/10W (1608)
R621	1-211-977-11	s	RESISTOR,CHIP 22 1/10W (1608)
R623	1-211-989-11	s	RESISTOR,CHIP 68 1/10W (1608)
R624	1-211-978-11	s	RESISTOR,CHIP 24 1/10W (1608)
R625	1-211-984-11	s	RESISTOR,CHIP 43 1/10W (1608)
R626	1-218-829-11	s	RESISTOR,CHIP 180 1/10W (1608)
R627	1-211-985-11	s	RESISTOR,CHIP 47 1/10W (1608)
R628	1-218-881-11	s	RESISTOR, CHIP 27K 1/10W(1608)
R629	1-218-871-11	s	RESISTOR,CHIP 10K 1/10W (1608)
R630	1-211-989-11	s	RESISTOR,CHIP 68 1/10W (1608)
R631	1-211-978-11	s	RESISTOR,CHIP 24 1/10W (1608)
R632	1-218-865-11	s	RESISTOR,CHIP 5.6K 1/10W(1608)
R633	1-218-867-11	s	RESISTOR,CHIP 6.8K 1/10W(1608)
R634	1-211-985-11	s	RESISTOR,CHIP 47 1/10W (1608)
R635	1-211-985-11	s	RESISTOR,CHIP 47 1/10W (1608)
R637	1-211-985-11	s	RESISTOR,CHIP 47 1/10W (1608)
R638	1-218-855-11	s	RESISTOR,CHIP 2.2K 1/10W(1608)
R639	1-211-985-11	s	RESISTOR,CHIP 47 1/10W (1608)
R640	1-218-827-11	s	RESISTOR,CHIP 150 1/10W (1608)
R641	1-211-985-11	s	RESISTOR,CHIP 47 1/10W (1608)
R643	1-218-827-11	s	RESISTOR,CHIP 150 1/10W (1608)
R644	1-218-855-11	s	RESISTOR,CHIP 2.2K 1/10W(1608)
R645	1-218-847-11	s	RESISTOR, CHIP 1K 1/10W (1608)
R646	1-218-855-11	s	RESISTOR,CHIP 2.2K 1/10W(1608)
R647	1-211-989-11	s	RESISTOR,CHIP 68 1/10W (1608)
R648	1-211-989-11	s	RESISTOR,CHIP 68 1/10W (1608)
R649	1-218-847-11	s	RESISTOR, CHIP 1K 1/10W (1608)
R650	1-218-877-11	s	RESISTOR,CHIP 18K 1/10W (1608)
R651	1-218-877-11	s	RESISTOR,CHIP 18K 1/10W (1608)
R652	1-218-895-11	s	RESISTOR,CHIP 100K 1/10W(1608)
R653	1-218-895-11	s	RESISTOR,CHIP 100K 1/10W(1608)
R700	1-216-864-11	s	CONDUCTOR, CHIP (1608)
R705	1-218-831-11	s	RESISTOR, CHIP 220 1/10W(1608)
R707	*2 deleted		
	*1 1-218-871-11	s	RESISTOR,CHIP 10K 1/10W (1608)
R708	1-211-985-11	s	RESISTOR,CHIP 47 1/10W (1608)
R709	1-211-985-11	s	RESISTOR,CHIP 47 1/10W (1608)
R715	1-211-985-11	s	RESISTOR,CHIP 47 1/10W (1608)

(EPR-1B BOARD [SUFFIX 15, 16] for MSW RECORDER)

Ref. No. or Q'ty	Part No.	SP	Description
R716	1-211-985-11	s	RESISTOR,CHIP 47 1/10W (1608)
R717	1-211-985-11	s	RESISTOR,CHIP 47 1/10W (1608)
R718	1-211-985-11	s	RESISTOR,CHIP 47 1/10W (1608)
R719 *2	1-211-985-11	s	RESISTOR,CHIP 47 1/10W (1608)
R720	1-211-985-11	s	RESISTOR,CHIP 47 1/10W (1608)
R721	1-211-985-11	s	RESISTOR,CHIP 47 1/10W (1608)
R722	1-211-985-11	s	RESISTOR,CHIP 47 1/10W (1608)
R723 *2	1-216-864-11	s	CONDUCTOR, CHIP (1608)
*1	1-211-985-11	s	RESISTOR,CHIP 47 1/10W (1608)
R725 *2	deleted		
*1	1-216-864-11	s	CONDUCTOR, CHIP (1608)
R726 *2	deleted		
*1	1-211-977-11	s	RESISTOR,CHIP 22 1/10W (1608)
R727 *2	deleted		
*1	1-211-977-11	s	RESISTOR,CHIP 22 1/10W (1608)
R728 *2	deleted		
*1	1-211-977-11	s	RESISTOR,CHIP 22 1/10W (1608)
R729	1-211-977-11	s	RESISTOR,CHIP 22 1/10W (1608)
R730	1-211-977-11	s	RESISTOR,CHIP 22 1/10W (1608)
R731	1-211-977-11	s	RESISTOR,CHIP 22 1/10W (1608)
R732	1-211-977-11	s	RESISTOR,CHIP 22 1/10W (1608)
R733 *2	1-211-977-11	s	RESISTOR,CHIP 22 1/10W (1608)
R736 *2	1-211-985-11	s	RESISTOR,CHIP 47 1/10W (1608)
R737 *2	1-211-977-11	s	RESISTOR,CHIP 22 1/10W (1608)
R743	1-216-864-11	s	CONDUCTOR, CHIP (1608)
R744 *2	1-216-864-11	s	CONDUCTOR, CHIP (1608)
R745 *2	1-216-864-11	s	CONDUCTOR, CHIP (1608)
R746	1-216-864-11	s	CONDUCTOR, CHIP (1608)
R747 *2	1-216-864-11	s	CONDUCTOR, CHIP (1608)
R748 *2	1-216-864-11	s	CONDUCTOR, CHIP (1608)
R749	1-218-823-11	s	RESISTOR,CHIP 100 1/10W (1608)
R750	1-218-823-11	s	RESISTOR,CHIP 100 1/10W (1608)
R751 *2	1-216-864-11	s	CONDUCTOR, CHIP (1608)
R752 *2	1-216-864-11	s	CONDUCTOR, CHIP (1608)
R760	1-211-969-11	s	RESISTOR,CHIP 10 1/10W (1608)
R761	1-211-969-11	s	RESISTOR,CHIP 10 1/10W (1608)
R762	1-218-823-11	s	RESISTOR,CHIP 100 1/10W (1608)
R763	1-211-969-11	s	RESISTOR,CHIP 10 1/10W (1608)
R764	1-211-969-11	s	RESISTOR,CHIP 10 1/10W (1608)
R765	1-211-969-11	s	RESISTOR,CHIP 10 1/10W (1608)
R766	1-218-823-11	s	RESISTOR,CHIP 100 1/10W (1608)
R767	1-218-823-11	s	RESISTOR,CHIP 100 1/10W (1608)
R768	1-218-823-11	s	RESISTOR,CHIP 100 1/10W (1608)
R769	1-218-823-11	s	RESISTOR,CHIP 100 1/10W (1608)
R770	1-216-864-11	s	CONDUCTOR, CHIP (1608)
R771	1-216-864-11	s	CONDUCTOR, CHIP (1608)
R772	1-216-864-11	s	CONDUCTOR, CHIP (1608)
R780	1-218-823-11	s	RESISTOR,CHIP 100 1/10W (1608)
R781	1-218-823-11	s	RESISTOR,CHIP 100 1/10W (1608)
R782	1-218-823-11	s	RESISTOR,CHIP 100 1/10W (1608)
R783	1-216-864-11	s	CONDUCTOR, CHIP (1608)
R800	1-218-895-11	s	RESISTOR,CHIP 100K 1/10W(1608)
R801	1-218-895-11	s	RESISTOR,CHIP 100K 1/10W(1608)
R802	1-218-823-11	s	RESISTOR,CHIP 100 1/10W (1608)
R803	1-218-823-11	s	RESISTOR,CHIP 100 1/10W (1608)
R804	1-218-823-11	s	RESISTOR,CHIP 100 1/10W (1608)
R805	1-218-823-11	s	RESISTOR,CHIP 100 1/10W (1608)
R827	1-211-985-11	s	RESISTOR,CHIP 47 1/10W (1608)
R834	1-216-864-11	s	CONDUCTOR, CHIP (1608)
R835	1-216-864-11	s	CONDUCTOR, CHIP (1608)

(EPR-1B BOARD [SUFFIX 15, 16] for MSW RECORDER)

Ref. No. or Q'ty	Part No.	SP	Description
R836	1-216-864-11	s	CONDUCTOR, CHIP (1608)
R837	1-216-864-11	s	CONDUCTOR, CHIP (1608)
R838	1-216-864-11	s	CONDUCTOR, CHIP (1608)
R841 *2	1-218-823-11	s	RESISTOR,CHIP 100 1/10W (1608)
R842 *2	1-218-823-11	s	RESISTOR,CHIP 100 1/10W (1608)
R901	1-211-969-11	s	RESISTOR,CHIP 10 1/10W (1608)
R903 *2	deleted		
*1	1-211-969-11	s	RESISTOR,CHIP 10 1/10W (1608)
R904	1-216-864-11	s	CONDUCTOR, CHIP (1608)
R905	1-218-823-11	s	RESISTOR,CHIP 100 1/10W (1608)
R906	1-218-823-11	s	RESISTOR,CHIP 100 1/10W (1608)
R907	1-218-823-11	s	RESISTOR,CHIP 100 1/10W (1608)
R908	1-216-864-11	s	CONDUCTOR, CHIP (1608)
R909	1-216-864-11	s	CONDUCTOR, CHIP (1608)
R910	1-216-864-11	s	CONDUCTOR, CHIP (1608)
R911	1-216-864-11	s	CONDUCTOR, CHIP (1608)
R912	1-216-864-11	s	CONDUCTOR, CHIP (1608)
R913	1-216-864-11	s	CONDUCTOR, CHIP (1608)
R914	1-216-864-11	s	CONDUCTOR, CHIP (1608)
R915	1-216-864-11	s	CONDUCTOR, CHIP (1608)
R917	1-216-864-11	s	CONDUCTOR, CHIP (1608)
R918	1-216-864-11	s	CONDUCTOR, CHIP (1608)
R919	1-216-864-11	s	CONDUCTOR, CHIP (1608)
R920	1-218-835-11	s	RESISTOR,CHIP 330 1/10W (1608)
R921	1-218-863-11	s	RESISTOR,CHIP 4.7K 1/10W(1608)
R922	1-211-969-11	s	RESISTOR,CHIP 10 1/10W (1608)
R924	1-216-864-11	s	CONDUCTOR, CHIP (1608)
R926	1-216-864-11	s	CONDUCTOR, CHIP (1608)
R927 *2	1-216-864-11	s	CONDUCTOR, CHIP (1608)
R1133 *2	1-216-864-11	s	CONDUCTOR, CHIP (1608)
RB100	1-234-397-11	s	NETWORK, RES (8 GANG) 100K
RB101	1-234-397-11	s	NETWORK, RES (8 GANG) 100K
RB102	1-234-397-11	s	NETWORK, RES (8 GANG) 100K
RB103	1-234-397-11	s	NETWORK, RES (8 GANG) 100K
RB104	1-233-576-11	s	RESISTOR,CHIP NETWORK 100
RB105	1-233-576-11	s	RESISTOR,CHIP NETWORK 100
RB106	1-233-810-21	s	RES, NETWORK 100K (3216)
RB107 *2	1-239-409-11	s	RESISTOR NETWORK 47 (1608)
RB108	1-234-397-11	s	NETWORK, RES (8 GANG) 100K
RB109	1-234-397-11	s	NETWORK, RES (8 GANG) 100K
RB110	1-234-397-11	s	NETWORK, RES (8 GANG) 100K
RB111	1-234-397-11	s	NETWORK, RES (8 GANG) 100K
RB112	1-234-397-11	s	NETWORK, RES (8 GANG) 100K
RB113	1-233-575-11	s	RES, CHIP NETWORK 22
RB114	1-233-575-11	s	RES, CHIP NETWORK 22
RB115	1-233-575-11	s	RES, CHIP NETWORK 22
RB116	1-233-575-11	s	RES, CHIP NETWORK 22
RB117	1-233-575-11	s	RES, CHIP NETWORK 22
RB118	1-233-575-11	s	RES, CHIP NETWORK 22
RB119 *2	1-239-409-11	s	RESISTOR NETWORK 47 (1608)
RB120	1-239-409-11	s	RESISTOR NETWORK 47 (1608)
RB121	1-233-810-21	s	RES, NETWORK 100K (3216)
RB122	1-233-810-21	s	RES, NETWORK 100K (3216)
RB124 *2	1-233-810-21	s	RES, NETWORK 100K (3216)
RB200	1-233-412-11	s	RESISTOR,CHIP NETWORK 1K
RB201	1-233-412-11	s	RESISTOR,CHIP NETWORK 1K
RB202 *2	deleted		
*1	1-233-412-11	s	RESISTOR,CHIP NETWORK 1K
RB203 *2	1-239-409-11	s	RESISTOR NETWORK 47 (1608)

(EPR-1B BOARD [SUFFIX 15, 16] for MSW RECORDER)

Ref. No. or Q'ty	Part No.	SP	Description
RB204 *2	1-239-409-11	s	RESISTOR NETWORK 47 (1608)
RB205 *2	1-239-409-11	s	RESISTOR NETWORK 47 (1608)
RB300	1-239-409-11	s	RESISTOR NETWORK 47 (1608)
RB301	1-239-409-11	s	RESISTOR NETWORK 47 (1608)
RB302	1-239-409-11	s	RESISTOR NETWORK 47 (1608)
RB303	1-239-409-11	s	RESISTOR NETWORK 47 (1608)
RB500	1-233-411-11	s	RESISTOR,CHIP NETWORK 220/3216
RB501	1-233-411-11	s	RESISTOR,CHIP NETWORK 220/3216
RB502	1-233-575-11	s	RES, CHIP NETWORK 22
RB503	1-233-575-11	s	RES, CHIP NETWORK 22
RB504	1-233-575-11	s	RES, CHIP NETWORK 22
RB506	1-233-411-11	s	RESISTOR,CHIP NETWORK 220/3216
RB600	1-233-576-11	s	RESISTOR,CHIP NETWORK 100
RB601	1-233-576-11	s	RESISTOR,CHIP NETWORK 100
RB700	1-234-522-91	s	NETWORK,RESISTOR (8 GANG) 220
RB701	1-234-522-91	s	NETWORK,RESISTOR (8 GANG) 220
RB703 *2	1-233-576-11	s	RESISTOR,CHIP NETWORK 100
RB704 *2	deleted		
*1	1-239-409-11	s	RESISTOR NETWORK 47 (1608)
RB705 *2	deleted		
*1	1-239-409-11	s	RESISTOR NETWORK 47 (1608)
RB708 *2	deleted		
*1	1-239-409-11	s	RESISTOR NETWORK 47 (1608)
RB709 *2	deleted		
*1	1-239-409-11	s	RESISTOR NETWORK 47 (1608)
RB710	1-239-409-11	s	RESISTOR NETWORK 47 (1608)
RB711	1-233-576-11	s	RESISTOR,CHIP NETWORK 100
RB712	1-233-477-11	s	NETWORK, RES (8 GANG) 1K
RB713	1-233-477-11	s	NETWORK, RES (8 GANG) 1K
RB714 *2	1-233-576-11	s	RESISTOR,CHIP NETWORK 100
RB715	1-233-477-11	s	NETWORK, RES (8 GANG) 1K
RB717	1-233-270-11	s	RESISTOR, NETWORK (8 GANG) 10K
RB718	1-233-576-11	s	RESISTOR,CHIP NETWORK 100
RB719	1-233-576-11	s	RESISTOR,CHIP NETWORK 100
RB720	1-233-576-11	s	RESISTOR,CHIP NETWORK 100
RB721	1-233-411-11	s	RESISTOR,CHIP NETWORK 220/3216
RB722 *2	1-236-908-11	s	RESISTOR,NETWORK 10K (3216)
RB800	1-239-409-11	s	RESISTOR NETWORK 47 (1608)
RB801	1-239-409-11	s	RESISTOR NETWORK 47 (1608)
RB802	1-239-409-11	s	RESISTOR NETWORK 47 (1608)
RB803	1-239-409-11	s	RESISTOR NETWORK 47 (1608)
RB804	1-239-409-11	s	RESISTOR NETWORK 47 (1608)
RB805	1-233-477-11	s	NETWORK, RES (8 GANG) 1K
RB806	1-233-477-11	s	NETWORK, RES (8 GANG) 1K
RB809	1-233-412-11	s	RESISTOR,CHIP NETWORK 1K
RB810	1-239-409-11	s	RESISTOR NETWORK 47 (1608)
RB811	1-233-270-11	s	RESISTOR, NETWORK (8 GANG) 10K
RB901	1-236-908-11	s	RESISTOR,NETWORK 10K (3216)
TP200	1-535-877-22	s	CHIP,CHECKER (TEST POINT)
TP201	1-535-877-22	s	CHIP,CHECKER (TEST POINT)
TP300	1-535-877-22	s	CHIP,CHECKER (TEST POINT)
TP301	1-535-877-22	s	CHIP,CHECKER (TEST POINT)
TP302	1-535-877-22	s	CHIP,CHECKER (TEST POINT)
TP500	1-535-877-22	s	CHIP,CHECKER (TEST POINT)
TP501	1-535-877-22	s	CHIP,CHECKER (TEST POINT)
TP600	1-535-877-22	s	CHIP,CHECKER (TEST POINT)
TP700	1-535-877-22	s	CHIP,CHECKER (TEST POINT)
TP701	1-535-877-22	s	CHIP,CHECKER (TEST POINT)
TP702	1-535-877-22	s	CHIP,CHECKER (TEST POINT)

(EPR-1B BOARD [SUFFIX 15, 16] for MSW RECORDER)

Ref. No. or Q'ty	Part No.	SP	Description
TP703 *2	1-535-877-22	s	CHIP,CHECKER (TEST POINT)
TP704 *2	1-535-877-22	s	CHIP,CHECKER (TEST POINT)
X300	1-781-807-21	s	OSCILLATOR, CRYSTAL (SMD)
X301	1-781-808-21	s	OSCILLATOR, CRYSTAL (SMD)

EPR-1B BOARD [SUFFIX 17-] for MSW RECORDER

[Lot No. 561 -] MSW-2000, M2000/P, M2000E/P, A2000/P

Ref. No. or Q'ty	Part No.	SP	Description
1pc	A-8345-214-C	s	MOUNTED CIRCUIT BOARD, EPR-1B
1pc	3-179-084-11	s	LEVER (R), C BOARD
1pc	3-179-085-11	s	LEVER (L), C BOARD
C1	1-127-692-91	s	CAP, CHIP CERAMIC 10MF B 3216
C4	1-107-826-11	s	CAPACITOR,CHIP CERAMIC 0.1MF
C5	1-127-692-91	s	CAP, CHIP CERAMIC 10MF B 3216
C6	1-127-692-91	s	CAP, CHIP CERAMIC 10MF B 3216
C11	1-165-811-11	s	CAPACITOR CHIP CERAMIC 22MF B
C12	1-165-811-11	s	CAPACITOR CHIP CERAMIC 22MF B
C51	1-127-861-11	s	CAP, CERAMIC 2.2MF B (3216)
C52	1-127-861-11	s	CAP, CERAMIC 2.2MF B (3216)
C61	1-127-861-11	s	CAP, CERAMIC 2.2MF B (3216)
C62	1-127-861-11	s	CAP, CERAMIC 2.2MF B (3216)
C100	1-127-692-91	s	CAP, CHIP CERAMIC 10MF B 3216
C101	1-107-826-11	s	CAPACITOR,CHIP CERAMIC 0.1MF
C102	1-127-692-91	s	CAP, CHIP CERAMIC 10MF B 3216
C104	1-107-826-11	s	CAPACITOR,CHIP CERAMIC 0.1MF
C105	1-107-826-11	s	CAPACITOR,CHIP CERAMIC 0.1MF
C106	1-107-826-11	s	CAPACITOR,CHIP CERAMIC 0.1MF
C107	1-107-826-11	s	CAPACITOR,CHIP CERAMIC 0.1MF
C108	1-107-826-11	s	CAPACITOR,CHIP CERAMIC 0.1MF
C110	1-107-826-11	s	CAPACITOR,CHIP CERAMIC 0.1MF
C111	1-107-826-11	s	CAPACITOR,CHIP CERAMIC 0.1MF
C112	1-107-826-11	s	CAPACITOR,CHIP CERAMIC 0.1MF
C113	1-107-826-11	s	CAPACITOR,CHIP CERAMIC 0.1MF
C114	1-107-826-11	s	CAPACITOR,CHIP CERAMIC 0.1MF
C115	1-107-826-11	s	CAPACITOR,CHIP CERAMIC 0.1MF
C116	1-107-826-11	s	CAPACITOR,CHIP CERAMIC 0.1MF
C200	1-107-826-11	s	CAPACITOR,CHIP CERAMIC 0.1MF
C201	1-165-811-11	s	CAPACITOR CHIP CERAMIC 22MF B
C202	1-165-811-11	s	CAPACITOR CHIP CERAMIC 22MF B
C203	1-107-826-11	s	CAPACITOR,CHIP CERAMIC 0.1MF
C204	1-107-826-11	s	CAPACITOR,CHIP CERAMIC 0.1MF
C205	1-107-826-11	s	CAPACITOR,CHIP CERAMIC 0.1MF
C206	1-107-826-11	s	CAPACITOR,CHIP CERAMIC 0.1MF
C207	1-107-826-11	s	CAPACITOR,CHIP CERAMIC 0.1MF
C208	1-127-692-91	s	CAP, CHIP CERAMIC 10MF B 3216
C209	1-107-826-11	s	CAPACITOR,CHIP CERAMIC 0.1MF
C210	1-107-826-11	s	CAPACITOR,CHIP CERAMIC 0.1MF
C211	1-107-826-11	s	CAPACITOR,CHIP CERAMIC 0.1MF
C212	1-107-826-11	s	CAPACITOR,CHIP CERAMIC 0.1MF
C213	1-107-826-11	s	CAPACITOR,CHIP CERAMIC 0.1MF
C214	1-107-826-11	s	CAPACITOR,CHIP CERAMIC 0.1MF
C215	1-107-826-11	s	CAPACITOR,CHIP CERAMIC 0.1MF
C216	1-107-826-11	s	CAPACITOR,CHIP CERAMIC 0.1MF
C217	1-107-826-11	s	CAPACITOR,CHIP CERAMIC 0.1MF
C218	1-127-692-91	s	CAP, CHIP CERAMIC 10MF B 3216
C300	1-127-692-91	s	CAP, CHIP CERAMIC 10MF B 3216
C301	1-107-826-11	s	CAPACITOR,CHIP CERAMIC 0.1MF
C302	1-107-826-11	s	CAPACITOR,CHIP CERAMIC 0.1MF
C303	1-107-826-11	s	CAPACITOR,CHIP CERAMIC 0.1MF
C304	1-107-826-11	s	CAPACITOR,CHIP CERAMIC 0.1MF
C305	1-107-826-11	s	CAPACITOR,CHIP CERAMIC 0.1MF
C306	1-107-826-11	s	CAPACITOR,CHIP CERAMIC 0.1MF
C307	1-107-826-11	s	CAPACITOR,CHIP CERAMIC 0.1MF
C308	1-107-826-11	s	CAPACITOR,CHIP CERAMIC 0.1MF
C309	1-107-826-11	s	CAPACITOR,CHIP CERAMIC 0.1MF

(EPR-1B BOARD [SUFFIX 17-] for MSW RECORDER)

Ref. No. or Q'ty	Part No.	SP	Description
C310	1-107-826-11	s	CAPACITOR,CHIP CERAMIC 0.1MF
C311	1-107-826-11	s	CAPACITOR,CHIP CERAMIC 0.1MF
C312	1-107-826-11	s	CAPACITOR,CHIP CERAMIC 0.1MF
C313	1-107-826-11	s	CAPACITOR,CHIP CERAMIC 0.1MF
C314	1-107-826-11	s	CAPACITOR,CHIP CERAMIC 0.1MF
C315	1-127-692-91	s	CAP, CHIP CERAMIC 10MF B 3216
C316	1-127-692-91	s	CAP, CHIP CERAMIC 10MF B 3216
C317	1-107-826-11	s	CAPACITOR,CHIP CERAMIC 0.1MF
C318	1-107-826-11	s	CAPACITOR,CHIP CERAMIC 0.1MF
C319	1-107-826-11	s	CAPACITOR,CHIP CERAMIC 0.1MF
C320	1-107-826-11	s	CAPACITOR,CHIP CERAMIC 0.1MF
C321	1-107-826-11	s	CAPACITOR,CHIP CERAMIC 0.1MF
C322	1-107-826-11	s	CAPACITOR,CHIP CERAMIC 0.1MF
C325	1-127-692-91	s	CAP, CHIP CERAMIC 10MF B 3216
C326	1-127-692-91	s	CAP, CHIP CERAMIC 10MF B 3216
C327	1-107-826-11	s	CAPACITOR,CHIP CERAMIC 0.1MF
C328	1-107-826-11	s	CAPACITOR,CHIP CERAMIC 0.1MF
C329	1-107-826-11	s	CAPACITOR,CHIP CERAMIC 0.1MF
C330	1-107-826-11	s	CAPACITOR,CHIP CERAMIC 0.1MF
C331	1-107-826-11	s	CAPACITOR,CHIP CERAMIC 0.1MF
C332	1-107-826-11	s	CAPACITOR,CHIP CERAMIC 0.1MF
C333	1-107-826-11	s	CAPACITOR,CHIP CERAMIC 0.1MF
C334	1-107-826-11	s	CAPACITOR,CHIP CERAMIC 0.1MF
C335	1-107-826-11	s	CAPACITOR,CHIP CERAMIC 0.1MF
C336	1-107-826-11	s	CAPACITOR,CHIP CERAMIC 0.1MF
C337	1-107-826-11	s	CAPACITOR,CHIP CERAMIC 0.1MF
C338	1-107-826-11	s	CAPACITOR,CHIP CERAMIC 0.1MF
C339	1-107-826-11	s	CAPACITOR,CHIP CERAMIC 0.1MF
C340	1-107-826-11	s	CAPACITOR,CHIP CERAMIC 0.1MF
C341	1-107-826-11	s	CAPACITOR,CHIP CERAMIC 0.1MF
C342	1-107-826-11	s	CAPACITOR,CHIP CERAMIC 0.1MF
C344	1-107-826-11	s	CAPACITOR,CHIP CERAMIC 0.1MF
C345	1-107-826-11	s	CAPACITOR,CHIP CERAMIC 0.1MF
C346	1-107-826-11	s	CAPACITOR,CHIP CERAMIC 0.1MF
C354	1-107-826-11	s	CAPACITOR,CHIP CERAMIC 0.1MF
C401	1-107-826-11	s	CAPACITOR,CHIP CERAMIC 0.1MF
C402	1-107-826-11	s	CAPACITOR,CHIP CERAMIC 0.1MF
C403	1-107-826-11	s	CAPACITOR,CHIP CERAMIC 0.1MF
C404	1-107-826-11	s	CAPACITOR,CHIP CERAMIC 0.1MF
C405	1-107-826-11	s	CAPACITOR,CHIP CERAMIC 0.1MF
C406	1-107-826-11	s	CAPACITOR,CHIP CERAMIC 0.1MF
C407	1-107-826-11	s	CAPACITOR,CHIP CERAMIC 0.1MF
C408	1-107-826-11	s	CAPACITOR,CHIP CERAMIC 0.1MF
C409	1-107-826-11	s	CAPACITOR,CHIP CERAMIC 0.1MF
C410	1-107-826-11	s	CAPACITOR,CHIP CERAMIC 0.1MF
C411	1-107-826-11	s	CAPACITOR,CHIP CERAMIC 0.1MF
C412	1-107-826-11	s	CAPACITOR,CHIP CERAMIC 0.1MF
C413	1-107-826-11	s	CAPACITOR,CHIP CERAMIC 0.1MF
C414	1-107-826-11	s	CAPACITOR,CHIP CERAMIC 0.1MF
C415	1-107-826-11	s	CAPACITOR,CHIP CERAMIC 0.1MF
C416	1-107-826-11	s	CAPACITOR,CHIP CERAMIC 0.1MF
C417	1-107-826-11	s	CAPACITOR,CHIP CERAMIC 0.1MF
C418	1-107-826-11	s	CAPACITOR,CHIP CERAMIC 0.1MF
C419	1-127-692-91	s	CAP, CHIP CERAMIC 10MF B 3216
C420	1-107-826-11	s	CAPACITOR,CHIP CERAMIC 0.1MF
C421	1-127-692-91	s	CAP, CHIP CERAMIC 10MF B 3216
C422	1-107-826-11	s	CAPACITOR,CHIP CERAMIC 0.1MF
C423	1-107-826-11	s	CAPACITOR,CHIP CERAMIC 0.1MF
C424	1-107-826-11	s	CAPACITOR,CHIP CERAMIC 0.1MF

(EPR-1B BOARD [SUFFIX 17-] for MSW RECORDER)

Ref. No. or Q'ty	Part No.	SP	Description
C425	1-107-826-11	s	CAPACITOR,CHIP CERAMIC 0.1MF
C426	1-107-826-11	s	CAPACITOR,CHIP CERAMIC 0.1MF
C427	1-107-826-11	s	CAPACITOR,CHIP CERAMIC 0.1MF
C428	1-107-826-11	s	CAPACITOR,CHIP CERAMIC 0.1MF
C429	1-107-826-11	s	CAPACITOR,CHIP CERAMIC 0.1MF
C430	1-107-826-11	s	CAPACITOR,CHIP CERAMIC 0.1MF
C431	1-107-826-11	s	CAPACITOR,CHIP CERAMIC 0.1MF
C432	1-107-826-11	s	CAPACITOR,CHIP CERAMIC 0.1MF
C433	1-107-826-11	s	CAPACITOR,CHIP CERAMIC 0.1MF
C434	1-107-826-11	s	CAPACITOR,CHIP CERAMIC 0.1MF
C435	1-107-826-11	s	CAPACITOR,CHIP CERAMIC 0.1MF
C436	1-107-826-11	s	CAPACITOR,CHIP CERAMIC 0.1MF
C437	1-107-826-11	s	CAPACITOR,CHIP CERAMIC 0.1MF
C438	1-107-826-11	s	CAPACITOR,CHIP CERAMIC 0.1MF
C500	1-107-826-11	s	CAPACITOR,CHIP CERAMIC 0.1MF
C501	1-107-826-11	s	CAPACITOR,CHIP CERAMIC 0.1MF
C502	1-127-573-11	s	CAPACITOR,CERAMIC 1MFB(2012)
C503	1-127-692-91	s	CAP, CHIP CERAMIC 10MF B 3216
C504	1-107-826-11	s	CAPACITOR,CHIP CERAMIC 0.1MF
C505	1-107-826-11	s	CAPACITOR,CHIP CERAMIC 0.1MF
C506	1-107-826-11	s	CAPACITOR,CHIP CERAMIC 0.1MF
C507	1-127-573-11	s	CAPACITOR,CERAMIC 1MFB(2012)
C508	1-107-826-11	s	CAPACITOR,CHIP CERAMIC 0.1MF
C509	1-162-923-11	s	CAPACITOR,CERAMIC 47PF/50V CH
C510	1-107-826-11	s	CAPACITOR,CHIP CERAMIC 0.1MF
C511	1-107-826-11	s	CAPACITOR,CHIP CERAMIC 0.1MF
C512	1-107-826-11	s	CAPACITOR,CHIP CERAMIC 0.1MF
C513	1-107-826-11	s	CAPACITOR,CHIP CERAMIC 0.1MF
C514	1-107-826-11	s	CAPACITOR,CHIP CERAMIC 0.1MF
C515	1-162-915-11	s	CAPACITOR,CERAMIC 10PF/50V CH
C516	1-165-811-11	s	CAPACITOR CHIP CERAMIC 22MF B
C517	1-107-826-11	s	CAPACITOR,CHIP CERAMIC 0.1MF
C518	1-107-826-11	s	CAPACITOR,CHIP CERAMIC 0.1MF
C519	1-107-826-11	s	CAPACITOR,CHIP CERAMIC 0.1MF
C520	1-107-826-11	s	CAPACITOR,CHIP CERAMIC 0.1MF
C521	1-107-826-11	s	CAPACITOR,CHIP CERAMIC 0.1MF
C522	1-165-811-11	s	CAPACITOR CHIP CERAMIC 22MF B
C523	1-107-826-11	s	CAPACITOR,CHIP CERAMIC 0.1MF
C524	1-107-826-11	s	CAPACITOR,CHIP CERAMIC 0.1MF
C525	1-165-811-11	s	CAPACITOR CHIP CERAMIC 22MF B
C526	1-107-826-11	s	CAPACITOR,CHIP CERAMIC 0.1MF
C527	1-107-826-11	s	CAPACITOR,CHIP CERAMIC 0.1MF
C528	1-107-826-11	s	CAPACITOR,CHIP CERAMIC 0.1MF
C529	1-107-826-11	s	CAPACITOR,CHIP CERAMIC 0.1MF
C530	1-107-826-11	s	CAPACITOR,CHIP CERAMIC 0.1MF
C531	1-107-826-11	s	CAPACITOR,CHIP CERAMIC 0.1MF
C532	1-107-826-11	s	CAPACITOR,CHIP CERAMIC 0.1MF
C534	1-107-826-11	s	CAPACITOR,CHIP CERAMIC 0.1MF
C535	1-107-826-11	s	CAPACITOR,CHIP CERAMIC 0.1MF
C536	1-107-826-11	s	CAPACITOR,CHIP CERAMIC 0.1MF
C537	1-107-826-11	s	CAPACITOR,CHIP CERAMIC 0.1MF
C538	1-107-826-11	s	CAPACITOR,CHIP CERAMIC 0.1MF
C539	1-107-826-11	s	CAPACITOR,CHIP CERAMIC 0.1MF
C540	1-107-826-11	s	CAPACITOR,CHIP CERAMIC 0.1MF
C541	1-107-826-11	s	CAPACITOR,CHIP CERAMIC 0.1MF
C542	1-107-826-11	s	CAPACITOR,CHIP CERAMIC 0.1MF
C543	1-107-826-11	s	CAPACITOR,CHIP CERAMIC 0.1MF
C544	1-165-811-11	s	CAPACITOR CHIP CERAMIC 22MF B
C545	1-107-826-11	s	CAPACITOR,CHIP CERAMIC 0.1MF

(EPR-1B BOARD [SUFFIX 17-] for MSW RECORDER)

Ref. No. or Q'ty	Part No.	SP	Description
C546	1-162-907-11	s	CAPACITOR,CERAMIC 2PF/50V(CK)
C547	1-127-692-91	s	CAP, CHIP CERAMIC 10MF B 3216
C548	1-107-826-11	s	CAPACITOR,CHIP CERAMIC 0.1MF
C549	1-165-811-11	s	CAPACITOR CHIP CERAMIC 22MF B
C550	1-165-811-11	s	CAPACITOR CHIP CERAMIC 22MF B
C551	1-165-811-11	s	CAPACITOR CHIP CERAMIC 22MF B
C552	1-165-811-11	s	CAPACITOR CHIP CERAMIC 22MF B
C600	1-107-826-11	s	CAPACITOR,CHIP CERAMIC 0.1MF
C601	1-165-811-11	s	CAPACITOR CHIP CERAMIC 22MF B
C602	1-107-826-11	s	CAPACITOR,CHIP CERAMIC 0.1MF
C603	1-107-826-11	s	CAPACITOR,CHIP CERAMIC 0.1MF
C604	1-165-811-11	s	CAPACITOR CHIP CERAMIC 22MF B
C605	1-107-826-11	s	CAPACITOR,CHIP CERAMIC 0.1MF
C606	1-107-826-11	s	CAPACITOR,CHIP CERAMIC 0.1MF
C607	1-107-826-11	s	CAPACITOR,CHIP CERAMIC 0.1MF
C608	1-107-826-11	s	CAPACITOR,CHIP CERAMIC 0.1MF
C609	1-107-826-11	s	CAPACITOR,CHIP CERAMIC 0.1MF
C610	1-107-826-11	s	CAPACITOR,CHIP CERAMIC 0.1MF
C611	1-107-826-11	s	CAPACITOR,CHIP CERAMIC 0.1MF
C612	1-162-915-11	s	CAPACITOR,CERAMIC 10PF/50V CH
C613	1-107-826-11	s	CAPACITOR,CHIP CERAMIC 0.1MF
C614	1-107-826-11	s	CAPACITOR,CHIP CERAMIC 0.1MF
C615	1-107-826-11	s	CAPACITOR,CHIP CERAMIC 0.1MF
C616	1-107-826-11	s	CAPACITOR,CHIP CERAMIC 0.1MF
C617	1-107-826-11	s	CAPACITOR,CHIP CERAMIC 0.1MF
C618	1-165-811-11	s	CAPACITOR CHIP CERAMIC 22MF B
C619	1-107-826-11	s	CAPACITOR,CHIP CERAMIC 0.1MF
C620	1-107-826-11	s	CAPACITOR,CHIP CERAMIC 0.1MF
C622	1-107-826-11	s	CAPACITOR,CHIP CERAMIC 0.1MF
C623	1-107-826-11	s	CAPACITOR,CHIP CERAMIC 0.1MF
C624	1-162-911-11	s	CAPACITOR,CERAMIC 6PF/50V 1608
C625	1-107-826-11	s	CAPACITOR,CHIP CERAMIC 0.1MF
C626	1-107-826-11	s	CAPACITOR,CHIP CERAMIC 0.1MF
C627	1-107-826-11	s	CAPACITOR,CHIP CERAMIC 0.1MF
C628	1-107-826-11	s	CAPACITOR,CHIP CERAMIC 0.1MF
C629	1-107-826-11	s	CAPACITOR,CHIP CERAMIC 0.1MF
C630	1-107-826-11	s	CAPACITOR,CHIP CERAMIC 0.1MF
C631	1-107-826-11	s	CAPACITOR,CHIP CERAMIC 0.1MF
C632	1-107-826-11	s	CAPACITOR,CHIP CERAMIC 0.1MF
C633	1-107-826-11	s	CAPACITOR,CHIP CERAMIC 0.1MF
C634	1-107-826-11	s	CAPACITOR,CHIP CERAMIC 0.1MF
C635	1-127-692-91	s	CAP, CHIP CERAMIC 10MF B 3216
C636	1-107-826-11	s	CAPACITOR,CHIP CERAMIC 0.1MF
C637	1-107-826-11	s	CAPACITOR,CHIP CERAMIC 0.1MF
C638	1-162-907-11	s	CAPACITOR,CERAMIC 2PF/50V(CK)
C639	1-162-907-11	s	CAPACITOR,CERAMIC 2PF/50V(CK)
C640	1-107-826-11	s	CAPACITOR,CHIP CERAMIC 0.1MF
C642	1-164-230-11	s	CAPACITOR,CERAMIC 220PF/50V
C643	1-164-230-11	s	CAPACITOR,CERAMIC 220PF/50V
C644	1-127-861-11	s	CAP, CERAMIC 2.2MF B (3216)
C645	1-127-861-11	s	CAP, CERAMIC 2.2MF B (3216)
C646	1-107-826-11	s	CAPACITOR,CHIP CERAMIC 0.1MF
C647	1-107-826-11	s	CAPACITOR,CHIP CERAMIC 0.1MF
C648	1-107-826-11	s	CAPACITOR,CHIP CERAMIC 0.1MF
C649	1-165-811-11	s	CAPACITOR CHIP CERAMIC 22MF B
C650	1-165-811-11	s	CAPACITOR CHIP CERAMIC 22MF B
C651	1-165-811-11	s	CAPACITOR CHIP CERAMIC 22MF B
C701	1-107-826-11	s	CAPACITOR,CHIP CERAMIC 0.1MF
C702	1-127-692-91	s	CAP, CHIP CERAMIC 10MF B 3216

(EPR-1B BOARD [SUFFIX 17-] for MSW RECORDER)

Ref. No. or Q'ty	Part No.	SP	Description
C703	1-107-826-11	s	CAPACITOR,CHIP CERAMIC 0.1MF
C704	1-107-826-11	s	CAPACITOR,CHIP CERAMIC 0.1MF
C705	1-107-826-11	s	CAPACITOR,CHIP CERAMIC 0.1MF
C706	1-107-826-11	s	CAPACITOR,CHIP CERAMIC 0.1MF
C707	1-107-826-11	s	CAPACITOR,CHIP CERAMIC 0.1MF
C708	1-107-826-11	s	CAPACITOR,CHIP CERAMIC 0.1MF
C710	1-107-826-11	s	CAPACITOR,CHIP CERAMIC 0.1MF
C711	1-107-826-11	s	CAPACITOR,CHIP CERAMIC 0.1MF
C712	1-107-826-11	s	CAPACITOR,CHIP CERAMIC 0.1MF
C713	1-107-826-11	s	CAPACITOR,CHIP CERAMIC 0.1MF
C715	1-107-826-11	s	CAPACITOR,CHIP CERAMIC 0.1MF
C716	1-107-826-11	s	CAPACITOR,CHIP CERAMIC 0.1MF
C717	1-107-826-11	s	CAPACITOR,CHIP CERAMIC 0.1MF
C718	1-127-692-91	s	CAP, CHIP CERAMIC 10MF B 3216
C719	1-107-826-11	s	CAPACITOR,CHIP CERAMIC 0.1MF
C720	1-107-826-11	s	CAPACITOR,CHIP CERAMIC 0.1MF
C721	1-127-692-91	s	CAP, CHIP CERAMIC 10MF B 3216
C801	1-107-826-11	s	CAPACITOR,CHIP CERAMIC 0.1MF
C802	1-107-826-11	s	CAPACITOR,CHIP CERAMIC 0.1MF
C803	1-107-826-11	s	CAPACITOR,CHIP CERAMIC 0.1MF
C805	1-107-826-11	s	CAPACITOR,CHIP CERAMIC 0.1MF
C806	1-107-826-11	s	CAPACITOR,CHIP CERAMIC 0.1MF
C808	1-107-826-11	s	CAPACITOR,CHIP CERAMIC 0.1MF
C810	1-107-826-11	s	CAPACITOR,CHIP CERAMIC 0.1MF
C811	1-127-692-91	s	CAP, CHIP CERAMIC 10MF B 3216
C812	1-127-692-91	s	CAP, CHIP CERAMIC 10MF B 3216
C901	1-127-692-91	s	CAP, CHIP CERAMIC 10MF B 3216
C902	1-127-692-91	s	CAP, CHIP CERAMIC 10MF B 3216
C903	1-107-826-11	s	CAPACITOR,CHIP CERAMIC 0.1MF
C904	1-107-826-11	s	CAPACITOR,CHIP CERAMIC 0.1MF
C905	1-107-826-11	s	CAPACITOR,CHIP CERAMIC 0.1MF
C906	1-107-826-11	s	CAPACITOR,CHIP CERAMIC 0.1MF
C907	1-107-826-11	s	CAPACITOR,CHIP CERAMIC 0.1MF
C908	1-107-826-11	s	CAPACITOR,CHIP CERAMIC 0.1MF
C909	1-107-826-11	s	CAPACITOR,CHIP CERAMIC 0.1MF
C910	1-107-826-11	s	CAPACITOR,CHIP CERAMIC 0.1MF
C911	1-107-826-11	s	CAPACITOR,CHIP CERAMIC 0.1MF
C912	1-107-826-11	s	CAPACITOR,CHIP CERAMIC 0.1MF
C913	1-107-826-11	s	CAPACITOR,CHIP CERAMIC 0.1MF
C914	1-107-826-11	s	CAPACITOR,CHIP CERAMIC 0.1MF
C915	1-107-826-11	s	CAPACITOR,CHIP CERAMIC 0.1MF
C916	1-107-826-11	s	CAPACITOR,CHIP CERAMIC 0.1MF
CN1	1-580-789-91	s	PIN, CONNECTOR 6P
CN500	1-764-243-11	o	CONNECTOR (COAXIAL)
CN501	1-764-243-11	o	CONNECTOR (COAXIAL)
CN600	1-764-243-11	o	CONNECTOR (COAXIAL)
CN601	1-764-243-11	o	CONNECTOR (COAXIAL)
D600	8-719-820-41	s	DIODE 1SS302
D601	8-719-820-41	s	DIODE 1SS302
D602	8-719-820-41	s	DIODE 1SS302
D603	8-719-820-41	s	DIODE 1SS302
E101	1-535-877-22	s	CHIP,CHECKER (TEST POINT)
E300	1-535-877-22	s	CHIP,CHECKER (TEST POINT)
E301	1-535-877-22	s	CHIP,CHECKER (TEST POINT)
E500	1-535-877-22	s	CHIP,CHECKER (TEST POINT)
E600	1-535-877-22	s	CHIP,CHECKER (TEST POINT)
E1101	1-535-877-22	s	CHIP,CHECKER (TEST POINT)
E1201	1-535-877-22	s	CHIP,CHECKER (TEST POINT)

(EPR-1B BOARD [SUFFIX 17-] for MSW RECORDER)

Ref. No. or Q'ty	Part No.	SP	Description
F1	⚠ 1-576-270-11	s	FUSE CHIP 4A/125V (6125)
F2	⚠ 1-576-270-11	s	FUSE CHIP 4A/125V (6125)
F3	⚠ 1-576-270-11	s	FUSE CHIP 4A/125V (6125)
FB500	1-414-864-11	s	INDUCTOR, MICRO (CHIP TYPE)
FB501	1-414-864-11	s	INDUCTOR, MICRO (CHIP TYPE)
FB502	1-414-864-11	s	INDUCTOR, MICRO (CHIP TYPE)
FB503	1-414-864-11	s	INDUCTOR, MICRO (CHIP TYPE)
FB504	1-414-864-11	s	INDUCTOR, MICRO (CHIP TYPE)
FB505	1-414-864-11	s	INDUCTOR, MICRO (CHIP TYPE)
FB506	1-414-864-11	s	INDUCTOR, MICRO (CHIP TYPE)
FB507	1-414-864-11	s	INDUCTOR, MICRO (CHIP TYPE)
FB508	1-414-864-11	s	INDUCTOR, MICRO (CHIP TYPE)
FB600	1-414-864-11	s	INDUCTOR, MICRO (CHIP TYPE)
FB601	1-414-864-11	s	INDUCTOR, MICRO (CHIP TYPE)
FB602	1-414-864-11	s	INDUCTOR, MICRO (CHIP TYPE)
FB603	1-414-864-11	s	INDUCTOR, MICRO (CHIP TYPE)
IC1	8-759-523-81	s	IC TC74VHC08FT(EL)
IC100	8-759-392-77	s	IC SN74LVC245APW (E20)
IC101	8-759-549-15	s	IC SN74LV245APWR
IC102	8-759-549-15	s	IC SN74LV245APWR
IC103	8-759-392-77	s	IC SN74LVC245APW (E20)
IC104	8-759-524-07	s	IC TC74VHC138FT(EL)
IC106	8-759-549-15	s	IC SN74LV245APWR
IC107	8-759-549-15	s	IC SN74LV245APWR
IC108	8-759-523-81	s	IC TC74VHC08FT(EL)
IC109	8-759-524-07	s	IC TC74VHC138FT(EL)
IC111	8-752-392-03	s	IC CXD1095BR
IC112	8-759-523-81	s	IC TC74VHC08FT(EL)
IC113	8-759-523-94	s	IC TC74VHC32FT(EL)
IC114	8-759-497-44	s	IC TC7WH125FU(TE12R)
IC115	8-759-549-15	s	IC SN74LV245APWR
IC116	6-706-487-01	s	IC TC7SH08FU(T5RSOYJF)
IC200	8-759-696-35	s	IC TPS7101QDR
IC300	8-759-656-31	o	IC CXD9094AR
IC301	8-759-640-93	o	IC CXD9095AR
IC304	6-705-983-01	s	IC IS42S32200B-6TL-TR
IC305	8-759-531-92	s	IC TC7WH04FU(TE12R)
IC401	6-704-838-01	s	IC MT48LC2M32B2P
IC500	8-759-490-41	s	IC TC74VHCT541AFT(EL)
IC501	8-759-672-76	s	IC AK9813BF-E2
IC502	8-759-497-44	s	IC TC7WH125FU(TE12R)
IC503	8-752-078-34	s	IC CXB1342R
IC504	8-759-549-15	s	IC SN74LV245APWR
IC505	8-759-549-15	s	IC SN74LV245APWR
IC506	8-759-460-72	s	IC BA033FP
IC507	8-759-337-40	s	IC NJM2904V(TE2)
IC508	8-759-533-85	s	IC L88M05T-FA-TL
IC600	8-752-078-32	s	IC CXB1341R
IC602	8-759-523-95	s	IC TC74VHC74FT(EL)
IC603	8-759-447-77	s	IC TC7WH74FU (TE12R)
IC604	8-759-491-46	s	IC TC74VHCT04AFT (EL)
IC605	8-759-523-96	s	IC TC74VHC86FT (EL)
IC701	8-759-392-77	s	IC SN74LVC245APW (E20)
IC702	8-759-524-52	s	IC TC74VHC574FT(EL)
IC703	8-759-524-52	s	IC TC74VHC574FT(EL)
IC704	8-759-524-52	s	IC TC74VHC574FT(EL)
IC705	8-759-392-77	s	IC SN74LVC245APW (E20)
IC706	8-759-549-15	s	IC SN74LV245APWR

(EPR-1B BOARD [SUFFIX 17-] for MSW RECORDER)

Ref. No. or Q'ty	Part No.	SP	Description
IC707	8-759-549-15	s	IC SN74LV245APWR
IC708	8-759-524-27	s	IC TC74VHC244FT(EL)
IC709	8-759-549-15	s	IC SN74LV245APWR
IC710	8-759-524-29	s	IC TC74VHC257FT(EL)
IC711	8-759-524-10	s	IC TC74VHC157FT (EL)
IC712	8-759-524-10	s	IC TC74VHC157FT (EL)
IC714	8-759-549-15	s	IC SN74LV245APWR
IC715	8-759-549-15	s	IC SN74LV245APWR
IC717	8-759-392-77	s	IC SN74LVC245APW (E20)
IC718	8-759-524-10	s	IC TC74VHC157FT (EL)
IC813	8-759-712-31	s	IC SN65LVDT388DBTR
IC814	8-759-712-31	s	IC SN65LVDT388DBTR
IC816	8-759-712-31	s	IC SN65LVDT388DBTR
IC817	8-759-712-32	s	IC SN65LVDS389DBTR
IC818	8-759-712-32	s	IC SN65LVDS389DBTR
IC819	8-759-712-32	s	IC SN65LVDS389DBTR
IC820	8-759-524-10	s	IC TC74VHC157FT (EL)
IC902	8-759-524-27	s	IC TC74VHC244FT(EL)
L100	1-412-923-21	s	INDUCTOR CHIP 0.047UH (2520)
L101	1-412-923-21	s	INDUCTOR CHIP 0.047UH (2520)
L304	1-412-923-21	s	INDUCTOR CHIP 0.047UH (2520)
L500	1-414-465-31	s	INDUCTOR, CHIP (J) 15NH
L700	1-412-923-21	s	INDUCTOR CHIP 0.047UH (2520)
L701	1-412-923-21	s	INDUCTOR CHIP 0.047UH (2520)
L702	1-412-923-21	s	INDUCTOR CHIP 0.047UH (2520)
L800	1-412-923-21	s	INDUCTOR CHIP 0.047UH (2520)
L801	1-412-923-21	s	INDUCTOR CHIP 0.047UH (2520)
Q1	8-729-928-81	s	TRANSISTOR DTC144EE
Q51	8-729-928-19	s	TRANSISTOR 2SA1774R
Q52	8-729-047-32	s	TRANSISTOR SI4425DY-T1
Q61	8-729-928-19	s	TRANSISTOR 2SA1774R
Q62	8-729-047-32	s	TRANSISTOR SI4425DY-T1
Q500	8-729-928-19	s	TRANSISTOR 2SA1774R
Q501	8-729-043-92	s	TRANSISTOR 2SC5084-0(TE85L)
Q502	8-729-043-92	s	TRANSISTOR 2SC5084-0(TE85L)
Q503	8-729-043-92	s	TRANSISTOR 2SC5084-0(TE85L)
Q600	8-729-043-92	s	TRANSISTOR 2SC5084-0(TE85L)
Q601	8-729-043-92	s	TRANSISTOR 2SC5084-0(TE85L)
Q603	8-729-928-19	s	TRANSISTOR 2SA1774R
Q604	8-729-043-92	s	TRANSISTOR 2SC5084-0(TE85L)
Q605	8-729-043-92	s	TRANSISTOR 2SC5084-0(TE85L)
Q606	8-729-043-92	s	TRANSISTOR 2SC5084-0(TE85L)
R51	1-218-847-11	s	RESISTOR, CHIP 1K 1/10W (1608)
R52	1-218-847-11	s	RESISTOR, CHIP 1K 1/10W (1608)
R53	1-218-835-11	s	RESISTOR,CHIP 330 1/10W (1608)
R54	1-218-835-11	s	RESISTOR,CHIP 330 1/10W (1608)
R61	1-218-847-11	s	RESISTOR, CHIP 1K 1/10W (1608)
R62	1-218-847-11	s	RESISTOR, CHIP 1K 1/10W (1608)
R63	1-218-835-11	s	RESISTOR,CHIP 330 1/10W (1608)
R64	1-218-835-11	s	RESISTOR,CHIP 330 1/10W (1608)
R100	1-218-895-11	s	RESISTOR,CHIP 100K 1/10W(1608)
R101	1-218-895-11	s	RESISTOR,CHIP 100K 1/10W(1608)
R102	1-218-863-11	s	RESISTOR,CHIP 4.7K 1/10W(1608)
R104	1-216-864-11	s	CONDUCTOR, CHIP (1608)
R106	1-218-895-11	s	RESISTOR,CHIP 100K 1/10W(1608)
R107	1-211-977-11	s	RESISTOR,CHIP 22 1/10W (1608)
R108	1-216-864-11	s	CONDUCTOR, CHIP (1608)
R109	1-211-977-11	s	RESISTOR,CHIP 22 1/10W (1608)

(EPR-1B BOARD [SUFFIX 17-] for MSW RECORDER)

Ref. No. or Q'ty	Part No.	SP	Description
R110	1-211-977-11	s	RESISTOR,CHIP 22 1/10W (1608)
R119	1-216-864-11	s	CONDUCTOR, CHIP (1608)
R120	1-216-864-11	s	CONDUCTOR, CHIP (1608)
R121	1-216-864-11	s	CONDUCTOR, CHIP (1608)
R122	1-216-864-11	s	CONDUCTOR, CHIP (1608)
R125	1-216-864-11	s	CONDUCTOR, CHIP (1608)
R126	1-216-864-11	s	CONDUCTOR, CHIP (1608)
R128	1-218-895-11	s	RESISTOR,CHIP 100K 1/10W(1608)
R200	1-218-903-11	s	RESISTOR,CHIP 220K 1/10W(1608)
R201	1-218-835-11	s	RESISTOR,CHIP 330 1/10W (1608)
R202	1-218-881-11	s	RESISTOR, CHIP 27K 1/10W(1608)
R203	1-218-895-11	s	RESISTOR,CHIP 100K 1/10W(1608)
R204	1-218-871-11	s	RESISTOR,CHIP 10K 1/10W (1608)
R205	1-216-864-11	s	CONDUCTOR, CHIP (1608)
R206	1-211-985-11	s	RESISTOR,CHIP 47 1/10W (1608)
R207	1-211-985-11	s	RESISTOR,CHIP 47 1/10W (1608)
R208	1-218-823-11	s	RESISTOR,CHIP 100 1/10W (1608)
R209	1-216-864-11	s	CONDUCTOR, CHIP (1608)
R210	1-216-864-11	s	CONDUCTOR, CHIP (1608)
R211	1-216-864-11	s	CONDUCTOR, CHIP (1608)
R212	1-216-864-11	s	CONDUCTOR, CHIP (1608)
R213	1-216-864-11	s	CONDUCTOR, CHIP (1608)
R214	1-216-864-11	s	CONDUCTOR, CHIP (1608)
R215	1-216-864-11	s	CONDUCTOR, CHIP (1608)
R216	1-211-980-11	s	RESISTOR,CHIP 30 1/10W(1608)
R217	1-218-446-11	s	RESISTOR,CHIP 1 (1608)
R218	1-218-446-11	s	RESISTOR,CHIP 1 (1608)
R219	1-218-446-11	s	RESISTOR,CHIP 1 (1608)
R220	1-211-985-11	s	RESISTOR,CHIP 47 1/10W (1608)
R221	1-218-847-11	s	RESISTOR, CHIP 1K 1/10W (1608)
R222	1-218-847-11	s	RESISTOR, CHIP 1K 1/10W (1608)
R300	1-216-864-11	s	CONDUCTOR, CHIP (1608)
R301	1-216-864-11	s	CONDUCTOR, CHIP (1608)
R302	1-218-823-11	s	RESISTOR,CHIP 100 1/10W (1608)
R303	1-218-823-11	s	RESISTOR,CHIP 100 1/10W (1608)
R305	1-216-864-11	s	CONDUCTOR, CHIP (1608)
R306	1-216-864-11	s	CONDUCTOR, CHIP (1608)
R307	1-218-871-11	s	RESISTOR,CHIP 10K 1/10W (1608)
R308	1-216-864-11	s	CONDUCTOR, CHIP (1608)
R309	1-211-985-11	s	RESISTOR,CHIP 47 1/10W (1608)
R310	1-211-985-11	s	RESISTOR,CHIP 47 1/10W (1608)
R311	1-211-985-11	s	RESISTOR,CHIP 47 1/10W (1608)
R312	1-211-985-11	s	RESISTOR,CHIP 47 1/10W (1608)
R314	1-211-985-11	s	RESISTOR,CHIP 47 1/10W (1608)
R315	1-211-985-11	s	RESISTOR,CHIP 47 1/10W (1608)
R316	1-216-864-11	s	CONDUCTOR, CHIP (1608)
R317	1-216-864-11	s	CONDUCTOR, CHIP (1608)
R318	1-216-864-11	s	CONDUCTOR, CHIP (1608)
R319	1-216-864-11	s	CONDUCTOR, CHIP (1608)
R320	1-216-864-11	s	CONDUCTOR, CHIP (1608)
R321	1-218-871-11	s	RESISTOR,CHIP 10K 1/10W (1608)
R322	1-218-871-11	s	RESISTOR,CHIP 10K 1/10W (1608)
R323	1-211-985-11	s	RESISTOR,CHIP 47 1/10W (1608)
R324	1-211-985-11	s	RESISTOR,CHIP 47 1/10W (1608)
R325	1-216-864-11	s	CONDUCTOR, CHIP (1608)
R326	1-216-864-11	s	CONDUCTOR, CHIP (1608)
R327	1-211-985-11	s	RESISTOR,CHIP 47 1/10W (1608)
R328	1-216-864-11	s	CONDUCTOR, CHIP (1608)
R330	1-216-864-11	s	CONDUCTOR, CHIP (1608)

(EPR-1B BOARD [SUFFIX 17-] for MSW RECORDER)

Ref. No. or Q'ty	Part No.	SP	Description
R331	1-218-823-11	s	RESISTOR,CHIP 100 1/10W (1608)
R332	1-216-864-11	s	CONDUCTOR, CHIP (1608)
R333	1-216-864-11	s	CONDUCTOR, CHIP (1608)
R334	1-216-864-11	s	CONDUCTOR, CHIP (1608)
R335	1-211-985-11	s	RESISTOR,CHIP 47 1/10W (1608)
R337	1-218-823-11	s	RESISTOR,CHIP 100 1/10W (1608)
R338	1-218-823-11	s	RESISTOR,CHIP 100 1/10W (1608)
R339	1-218-823-11	s	RESISTOR,CHIP 100 1/10W (1608)
R341	1-216-864-11	s	CONDUCTOR, CHIP (1608)
R342	1-211-985-11	s	RESISTOR,CHIP 47 1/10W (1608)
R343	1-211-985-11	s	RESISTOR,CHIP 47 1/10W (1608)
R346	1-216-864-11	s	CONDUCTOR, CHIP (1608)
R347	1-216-864-11	s	CONDUCTOR, CHIP (1608)
R348	1-216-864-11	s	CONDUCTOR, CHIP (1608)
R349	1-216-864-11	s	CONDUCTOR, CHIP (1608)
R350	1-218-871-11	s	RESISTOR,CHIP 10K 1/10W (1608)
R351	1-218-855-11	s	RESISTOR,CHIP 2.2K 1/10W(1608)
R352	1-218-871-11	s	RESISTOR,CHIP 10K 1/10W (1608)
R373	1-216-864-11	s	CONDUCTOR, CHIP (1608)
R400	1-218-823-11	s	RESISTOR,CHIP 100 1/10W (1608)
R401	1-218-823-11	s	RESISTOR,CHIP 100 1/10W (1608)
R402	1-218-823-11	s	RESISTOR,CHIP 100 1/10W (1608)
R409	1-218-847-11	s	RESISTOR, CHIP 1K 1/10W (1608)
R500	1-218-895-11	s	RESISTOR,CHIP 100K 1/10W(1608)
R501	1-218-895-11	s	RESISTOR,CHIP 100K 1/10W(1608)
R502	1-218-895-11	s	RESISTOR,CHIP 100K 1/10W(1608)
R505	1-218-895-11	s	RESISTOR,CHIP 100K 1/10W(1608)
R506	1-218-873-11	s	RESISTOR,CHIP 12K 1/10W (1608)
R508	1-211-990-11	s	RESISTOR,CHIP 75 1/10W (1608)
R509	1-211-990-11	s	RESISTOR,CHIP 75 1/10W (1608)
R510	1-211-990-11	s	RESISTOR,CHIP 75 1/10W (1608)
R511	1-218-839-11	s	RESISTOR,CHIP 470 1/10W (1608)
R512	1-216-864-11	s	CONDUCTOR, CHIP (1608)
R513	1-218-833-11	s	RESISTOR,CHIP 270 1/10W (1608)
R515	1-218-866-11	s	RESISTOR,CHIP 6.2K 1/10W(1608)
R516	1-218-856-11	s	RESISTOR,CHIP 2.4K 1/10W(1608)
R517	1-218-865-11	s	RESISTOR,CHIP 5.6K 1/10W(1608)
R518	1-218-833-11	s	RESISTOR,CHIP 270 1/10W (1608)
R519	1-211-985-11	s	RESISTOR,CHIP 47 1/10W (1608)
R520	1-218-855-11	s	RESISTOR,CHIP 2.2K 1/10W(1608)
R521	1-218-867-11	s	RESISTOR,CHIP 6.8K 1/10W(1608)
R523	1-218-831-11	s	RESISTOR, CHIP 220 1/10W(1608)
R527	1-218-831-11	s	RESISTOR, CHIP 220 1/10W(1608)
R530	1-218-855-11	s	RESISTOR,CHIP 2.2K 1/10W(1608)
R531	1-218-855-11	s	RESISTOR,CHIP 2.2K 1/10W(1608)
R532	1-211-969-11	s	RESISTOR,CHIP 10 1/10W (1608)
R533	1-211-969-11	s	RESISTOR,CHIP 10 1/10W (1608)
R534	1-211-969-11	s	RESISTOR,CHIP 10 1/10W (1608)
R535	1-211-969-11	s	RESISTOR,CHIP 10 1/10W (1608)
R536	1-218-833-11	s	RESISTOR,CHIP 270 1/10W (1608)
R537	1-218-833-11	s	RESISTOR,CHIP 270 1/10W (1608)
R538	1-211-978-11	s	RESISTOR,CHIP 24 1/10W (1608)
R539	1-211-984-11	s	RESISTOR,CHIP 43 1/10W (1608)
R540	1-211-985-11	s	RESISTOR,CHIP 47 1/10W (1608)
R541	1-211-985-11	s	RESISTOR,CHIP 47 1/10W (1608)
R543	1-211-989-11	s	RESISTOR,CHIP 68 1/10W (1608)
R544	1-211-978-11	s	RESISTOR,CHIP 24 1/10W (1608)
R545	1-218-845-11	s	RESISTOR,CHIP 820 1/10W (1608)
R546	1-211-985-11	s	RESISTOR,CHIP 47 1/10W (1608)

(EPR-1B BOARD [SUFFIX 17-] for MSW RECORDER)

Ref. No. or Q'ty	Part No.	SP	Description
R547	1-218-833-11	s	RESISTOR,CHIP 270 1/10W (1608)
R548	1-218-847-11	s	RESISTOR, CHIP 1K 1/10W (1608)
R549	1-211-989-11	s	RESISTOR,CHIP 68 1/10W (1608)
R550	1-211-977-11	s	RESISTOR,CHIP 22 1/10W (1608)
R551	1-218-446-11	s	RESISTOR,CHIP 1 (1608)
R552	1-218-446-11	s	RESISTOR,CHIP 1 (1608)
R553	1-218-446-11	s	RESISTOR,CHIP 1 (1608)
R554	1-218-446-11	s	RESISTOR,CHIP 1 (1608)
R555	1-218-446-11	s	RESISTOR,CHIP 1 (1608)
R556	1-218-446-11	s	RESISTOR,CHIP 1 (1608)
R600	1-218-823-11	s	RESISTOR,CHIP 100 1/10W (1608)
R601	1-218-823-11	s	RESISTOR,CHIP 100 1/10W (1608)
R603	1-218-875-11	s	RESISTOR,CHIP 15K 1/10W (1608)
R604	1-218-875-11	s	RESISTOR,CHIP 15K 1/10W (1608)
R606	1-218-873-11	s	RESISTOR,CHIP 12K 1/10W (1608)
R608	1-218-851-11	s	RESISTOR,CHIP 1.5K 1/10W(1608)
R609	1-218-839-11	s	RESISTOR,CHIP 470 1/10W (1608)
R610	1-218-866-11	s	RESISTOR,CHIP 6.2K 1/10W(1608)
R611	1-218-847-11	s	RESISTOR, CHIP 1K 1/10W (1608)
R612	1-218-856-11	s	RESISTOR,CHIP 2.4K 1/10W(1608)
R613	1-218-865-11	s	RESISTOR,CHIP 5.6K 1/10W(1608)
R614	1-218-833-11	s	RESISTOR,CHIP 270 1/10W (1608)
R617	1-218-833-11	s	RESISTOR,CHIP 270 1/10W (1608)
R618	1-218-833-11	s	RESISTOR,CHIP 270 1/10W (1608)
R619	1-211-985-11	s	RESISTOR,CHIP 47 1/10W (1608)
R620	1-218-839-11	s	RESISTOR,CHIP 470 1/10W (1608)
R621	1-211-977-11	s	RESISTOR,CHIP 22 1/10W (1608)
R623	1-211-989-11	s	RESISTOR,CHIP 68 1/10W (1608)
R624	1-211-978-11	s	RESISTOR,CHIP 24 1/10W (1608)
R625	1-211-984-11	s	RESISTOR,CHIP 43 1/10W (1608)
R626	1-218-829-11	s	RESISTOR,CHIP 180 1/10W (1608)
R627	1-211-985-11	s	RESISTOR,CHIP 47 1/10W (1608)
R628	1-218-881-11	s	RESISTOR, CHIP 27K 1/10W(1608)
R629	1-218-871-11	s	RESISTOR,CHIP 10K 1/10W (1608)
R630	1-211-989-11	s	RESISTOR,CHIP 68 1/10W (1608)
R631	1-211-978-11	s	RESISTOR,CHIP 24 1/10W (1608)
R632	1-218-865-11	s	RESISTOR,CHIP 5.6K 1/10W(1608)
R633	1-218-867-11	s	RESISTOR,CHIP 6.8K 1/10W(1608)
R634	1-211-985-11	s	RESISTOR,CHIP 47 1/10W (1608)
R635	1-211-985-11	s	RESISTOR,CHIP 47 1/10W (1608)
R637	1-211-985-11	s	RESISTOR,CHIP 47 1/10W (1608)
R638	1-218-855-11	s	RESISTOR,CHIP 2.2K 1/10W(1608)
R639	1-211-985-11	s	RESISTOR,CHIP 47 1/10W (1608)
R640	1-218-827-11	s	RESISTOR,CHIP 150 1/10W (1608)
R641	1-211-985-11	s	RESISTOR,CHIP 47 1/10W (1608)
R643	1-218-827-11	s	RESISTOR,CHIP 150 1/10W (1608)
R644	1-218-855-11	s	RESISTOR,CHIP 2.2K 1/10W(1608)
R645	1-218-847-11	s	RESISTOR, CHIP 1K 1/10W (1608)
R646	1-218-855-11	s	RESISTOR,CHIP 2.2K 1/10W(1608)
R647	1-211-989-11	s	RESISTOR,CHIP 68 1/10W (1608)
R648	1-211-989-11	s	RESISTOR,CHIP 68 1/10W (1608)
R649	1-218-847-11	s	RESISTOR, CHIP 1K 1/10W (1608)
R650	1-218-877-11	s	RESISTOR,CHIP 18K 1/10W (1608)
R651	1-218-877-11	s	RESISTOR,CHIP 18K 1/10W (1608)
R652	1-218-895-11	s	RESISTOR,CHIP 100K 1/10W(1608)
R653	1-218-895-11	s	RESISTOR,CHIP 100K 1/10W(1608)
R700	1-216-864-11	s	CONDUCTOR, CHIP (1608)
R705	1-218-831-11	s	RESISTOR, CHIP 220 1/10W(1608)
R708	1-211-985-11	s	RESISTOR,CHIP 47 1/10W (1608)

(EPR-1B BOARD [SUFFIX 17-] for MSW RECORDER)

Ref. No. or Q'ty	Part No.	SP	Description
R709	1-211-985-11	s	RESISTOR,CHIP 47 1/10W (1608)
R715	1-211-985-11	s	RESISTOR,CHIP 47 1/10W (1608)
R716	1-211-985-11	s	RESISTOR,CHIP 47 1/10W (1608)
R717	1-211-985-11	s	RESISTOR,CHIP 47 1/10W (1608)
R718	1-211-985-11	s	RESISTOR,CHIP 47 1/10W (1608)
R719	1-211-985-11	s	RESISTOR,CHIP 47 1/10W (1608)
R720	1-211-985-11	s	RESISTOR,CHIP 47 1/10W (1608)
R721	1-211-985-11	s	RESISTOR,CHIP 47 1/10W (1608)
R722	1-211-985-11	s	RESISTOR,CHIP 47 1/10W (1608)
R723	1-216-864-11	s	CONDUCTOR, CHIP (1608)
R729	1-211-977-11	s	RESISTOR,CHIP 22 1/10W (1608)
R730	1-211-977-11	s	RESISTOR,CHIP 22 1/10W (1608)
R731	1-211-977-11	s	RESISTOR,CHIP 22 1/10W (1608)
R732	1-211-977-11	s	RESISTOR,CHIP 22 1/10W (1608)
R733	1-211-977-11	s	RESISTOR,CHIP 22 1/10W (1608)
R736	1-211-985-11	s	RESISTOR,CHIP 47 1/10W (1608)
R737	1-211-977-11	s	RESISTOR,CHIP 22 1/10W (1608)
R743	1-216-864-11	s	CONDUCTOR, CHIP (1608)
R744	1-216-864-11	s	CONDUCTOR, CHIP (1608)
R745	1-216-864-11	s	CONDUCTOR, CHIP (1608)
R746	1-216-864-11	s	CONDUCTOR, CHIP (1608)
R747	1-216-864-11	s	CONDUCTOR, CHIP (1608)
R748	1-216-864-11	s	CONDUCTOR, CHIP (1608)
R749	1-218-823-11	s	RESISTOR,CHIP 100 1/10W (1608)
R750	1-218-823-11	s	RESISTOR,CHIP 100 1/10W (1608)
R751	1-216-864-11	s	CONDUCTOR, CHIP (1608)
R752	1-216-864-11	s	CONDUCTOR, CHIP (1608)
R760	1-211-969-11	s	RESISTOR,CHIP 10 1/10W (1608)
R761	1-211-969-11	s	RESISTOR,CHIP 10 1/10W (1608)
R762	1-218-823-11	s	RESISTOR,CHIP 100 1/10W (1608)
R763	1-211-969-11	s	RESISTOR,CHIP 10 1/10W (1608)
R764	1-211-969-11	s	RESISTOR,CHIP 10 1/10W (1608)
R765	1-211-969-11	s	RESISTOR,CHIP 10 1/10W (1608)
R766	1-218-823-11	s	RESISTOR,CHIP 100 1/10W (1608)
R767	1-218-823-11	s	RESISTOR,CHIP 100 1/10W (1608)
R768	1-218-823-11	s	RESISTOR,CHIP 100 1/10W (1608)
R769	1-218-823-11	s	RESISTOR,CHIP 100 1/10W (1608)
R770	1-216-864-11	s	CONDUCTOR, CHIP (1608)
R771	1-216-864-11	s	CONDUCTOR, CHIP (1608)
R772	1-216-864-11	s	CONDUCTOR, CHIP (1608)
R780	1-218-823-11	s	RESISTOR,CHIP 100 1/10W (1608)
R781	1-218-823-11	s	RESISTOR,CHIP 100 1/10W (1608)
R782	1-218-823-11	s	RESISTOR,CHIP 100 1/10W (1608)
R783	1-216-864-11	s	CONDUCTOR, CHIP (1608)
R800	1-218-895-11	s	RESISTOR,CHIP 100K 1/10W(1608)
R801	1-218-895-11	s	RESISTOR,CHIP 100K 1/10W(1608)
R802	1-218-823-11	s	RESISTOR,CHIP 100 1/10W (1608)
R803	1-218-823-11	s	RESISTOR,CHIP 100 1/10W (1608)
R804	1-218-823-11	s	RESISTOR,CHIP 100 1/10W (1608)
R805	1-218-823-11	s	RESISTOR,CHIP 100 1/10W (1608)
R827	1-211-985-11	s	RESISTOR,CHIP 47 1/10W (1608)
R834	1-216-864-11	s	CONDUCTOR, CHIP (1608)
R835	1-216-864-11	s	CONDUCTOR, CHIP (1608)
R836	1-216-864-11	s	CONDUCTOR, CHIP (1608)
R837	1-216-864-11	s	CONDUCTOR, CHIP (1608)
R838	1-216-864-11	s	CONDUCTOR, CHIP (1608)
R841	1-218-823-11	s	RESISTOR,CHIP 100 1/10W (1608)
R842	1-218-823-11	s	RESISTOR,CHIP 100 1/10W (1608)
R901	1-211-969-11	s	RESISTOR,CHIP 10 1/10W (1608)

(EPR-1B BOARD [SUFFIX 17-] for MSW RECORDER)

Ref. No. or Q'ty	Part No.	SP	Description
R904	1-216-864-11	s	CONDUCTOR, CHIP (1608)
R905	1-218-823-11	s	RESISTOR,CHIP 100 1/10W (1608)
R906	1-218-823-11	s	RESISTOR,CHIP 100 1/10W (1608)
R907	1-218-823-11	s	RESISTOR,CHIP 100 1/10W (1608)
R908	1-216-864-11	s	CONDUCTOR, CHIP (1608)
R909	1-216-864-11	s	CONDUCTOR, CHIP (1608)
R910	1-216-864-11	s	CONDUCTOR, CHIP (1608)
R911	1-216-864-11	s	CONDUCTOR, CHIP (1608)
R912	1-216-864-11	s	CONDUCTOR, CHIP (1608)
R913	1-216-864-11	s	CONDUCTOR, CHIP (1608)
R914	1-216-864-11	s	CONDUCTOR, CHIP (1608)
R915	1-216-864-11	s	CONDUCTOR, CHIP (1608)
R917	1-216-864-11	s	CONDUCTOR, CHIP (1608)
R918	1-216-864-11	s	CONDUCTOR, CHIP (1608)
R919	1-216-864-11	s	CONDUCTOR, CHIP (1608)
R920	1-218-835-11	s	RESISTOR,CHIP 330 1/10W (1608)
R921	1-218-863-11	s	RESISTOR,CHIP 4.7K 1/10W(1608)
R922	1-211-969-11	s	RESISTOR,CHIP 10 1/10W (1608)
R924	1-216-864-11	s	CONDUCTOR, CHIP (1608)
R926	1-216-864-11	s	CONDUCTOR, CHIP (1608)
R927	1-216-864-11	s	CONDUCTOR, CHIP (1608)
R1133	1-216-864-11	s	CONDUCTOR, CHIP (1608)
RB100	1-234-397-11	s	NETWORK, RES (8 GANG) 100K
RB101	1-234-397-11	s	NETWORK, RES (8 GANG) 100K
RB102	1-234-397-11	s	NETWORK, RES (8 GANG) 100K
RB103	1-234-397-11	s	NETWORK, RES (8 GANG) 100K
RB104	1-233-576-11	s	RESISTOR,CHIP NETWORK 100
RB105	1-233-576-11	s	RESISTOR,CHIP NETWORK 100
RB106	1-233-810-21	s	RES, NETWORK 100K (3216)
RB107	1-239-409-11	s	RESISTOR NETWORK 47 (3216)
RB108	1-234-397-11	s	NETWORK, RES (8 GANG) 100K
RB109	1-234-397-11	s	NETWORK, RES (8 GANG) 100K
RB110	1-234-397-11	s	NETWORK, RES (8 GANG) 100K
RB111	1-234-397-11	s	NETWORK, RES (8 GANG) 100K
RB112	1-234-397-11	s	NETWORK, RES (8 GANG) 100K
RB113	1-233-575-11	s	RES, CHIP NETWORK 22
RB114	1-233-575-11	s	RES, CHIP NETWORK 22
RB115	1-233-575-11	s	RES, CHIP NETWORK 22
RB116	1-233-575-11	s	RES, CHIP NETWORK 22
RB117	1-233-575-11	s	RES, CHIP NETWORK 22
RB118	1-233-575-11	s	RES, CHIP NETWORK 22
RB119	1-239-409-11	s	RESISTOR NETWORK 47 (3216)
RB120	1-239-409-11	s	RESISTOR NETWORK 47 (3216)
RB121	1-233-810-21	s	RES, NETWORK 100K (3216)
RB122	1-233-810-21	s	RES, NETWORK 100K (3216)
RB124	1-233-810-21	s	RES, NETWORK 100K (3216)
RB200	1-233-412-11	s	RESISTOR,CHIP NETWORK 1K
RB201	1-233-412-11	s	RESISTOR,CHIP NETWORK 1K
RB203	1-239-409-11	s	RESISTOR NETWORK 47 (3216)
RB204	1-239-409-11	s	RESISTOR NETWORK 47 (3216)
RB205	1-239-409-11	s	RESISTOR NETWORK 47 (3216)
RB300	1-239-409-11	s	RESISTOR NETWORK 47 (3216)
RB301	1-239-409-11	s	RESISTOR NETWORK 47 (3216)
RB302	1-239-409-11	s	RESISTOR NETWORK 47 (3216)
RB303	1-239-409-11	s	RESISTOR NETWORK 47 (3216)
RB500	1-233-411-11	s	RESISTOR,CHIP NETWORK 220/3216
RB501	1-233-411-11	s	RESISTOR,CHIP NETWORK 220/3216
RB502	1-233-575-11	s	RES, CHIP NETWORK 22

(EPR-1B BOARD [SUFFIX 17-] for MSW RECORDER)

Ref. No. or Q'ty	Part No.	SP	Description
RB503	1-233-575-11	s	RES, CHIP NETWORK 22
RB504	1-233-575-11	s	RES, CHIP NETWORK 22
RB506	1-233-411-11	s	RESISTOR,CHIP NETWORK 220/3216
RB600	1-233-576-11	s	RESISTOR,CHIP NETWORK 100
RB601	1-233-576-11	s	RESISTOR,CHIP NETWORK 100
RB700	1-234-522-91	s	NETWORK,RESISTOR (8 GANG) 220
RB701	1-234-522-91	s	NETWORK,RESISTOR (8 GANG) 220
RB703	1-233-576-11	s	RESISTOR,CHIP NETWORK 100
RB710	1-239-409-11	s	RESISTOR NETWORK 47 (3216)
RB711	1-233-576-11	s	RESISTOR,CHIP NETWORK 100
RB712	1-233-477-11	s	NETWORK, RES (8 GANG) 1K
RB713	1-233-477-11	s	NETWORK, RES (8 GANG) 1K
RB714	1-233-576-11	s	RESISTOR,CHIP NETWORK 100
RB715	1-233-477-11	s	NETWORK, RES (8 GANG) 1K
RB717	1-233-270-11	s	RESISTOR, NETWORK (8 GANG) 10K
RB718	1-233-576-11	s	RESISTOR,CHIP NETWORK 100
RB719	1-233-576-11	s	RESISTOR,CHIP NETWORK 100
RB720	1-233-576-11	s	RESISTOR,CHIP NETWORK 100
RB721	1-233-411-11	s	RESISTOR,CHIP NETWORK 220/3216
RB722	1-236-908-11	s	RESISTOR,NETWORK 10K (3216)
RB800	1-239-409-11	s	RESISTOR NETWORK 47 (3216)
RB801	1-239-409-11	s	RESISTOR NETWORK 47 (3216)
RB802	1-239-409-11	s	RESISTOR NETWORK 47 (3216)
RB803	1-239-409-11	s	RESISTOR NETWORK 47 (3216)
RB804	1-239-409-11	s	RESISTOR NETWORK 47 (3216)
RB805	1-233-477-11	s	NETWORK, RES (8 GANG) 1K
RB806	1-233-477-11	s	NETWORK, RES (8 GANG) 1K
RB809	1-233-412-11	s	RESISTOR,CHIP NETWORK 1K
RB810	1-239-409-11	s	RESISTOR NETWORK 47 (3216)
RB811	1-233-270-11	s	RESISTOR, NETWORK (8 GANG) 10K
RB901	1-236-908-11	s	RESISTOR,NETWORK 10K (3216)
TP200	1-535-877-22	s	CHIP,CHECKER (TEST POINT)
TP201	1-535-877-22	s	CHIP,CHECKER (TEST POINT)
TP300	1-535-877-22	s	CHIP,CHECKER (TEST POINT)
TP301	1-535-877-22	s	CHIP,CHECKER (TEST POINT)
TP302	1-535-877-22	s	CHIP,CHECKER (TEST POINT)
TP500	1-535-877-22	s	CHIP,CHECKER (TEST POINT)
TP501	1-535-877-22	s	CHIP,CHECKER (TEST POINT)
TP600	1-535-877-22	s	CHIP,CHECKER (TEST POINT)
TP700	1-535-877-22	s	CHIP,CHECKER (TEST POINT)
TP701	1-535-877-22	s	CHIP,CHECKER (TEST POINT)
TP702	1-535-877-22	s	CHIP,CHECKER (TEST POINT)
TP703	1-535-877-22	s	CHIP,CHECKER (TEST POINT)
TP704	1-535-877-22	s	CHIP,CHECKER (TEST POINT)
X300	1-781-807-21	s	OSCILLATOR, CRYSTAL (SMD)
X301	1-781-808-21	s	OSCILLATOR, CRYSTAL (SMD)

EPR-1BA BOARD [SUFFIX 14] for MSW PLAYER

[Lot No. 261 - 375] MSW-M2100/P

Ref. No. or Q'ty	Part No.	SP	Description
1pc	A-8345-216-A	s	MOUNTED CIRCUIT BOARD, EPR-1BA
1pc	3-179-084-11	s	LEVER (R), C BOARD
1pc	3-179-085-11	s	LEVER (L), C BOARD
C1	1-126-394-11	s	CAPACITOR,ELECT 10MF/16V(CHIP)
C2	1-164-156-11	s	CAPACITOR,CERAMIC 0.1MF/25V F
C3	1-164-156-11	s	CAPACITOR,CERAMIC 0.1MF/25V F
C4	1-164-156-11	s	CAPACITOR,CERAMIC 0.1MF/25V F
C5	1-131-661-11	s	CAPACITOR,ELECT 100MF/10V CHIP
C6	1-131-661-11	s	CAPACITOR,ELECT 100MF/10V CHIP
C7	1-164-156-11	s	CAPACITOR,CERAMIC 0.1MF/25V F
C8	1-164-156-11	s	CAPACITOR,CERAMIC 0.1MF/25V F
C9	1-164-156-11	s	CAPACITOR,CERAMIC 0.1MF/25V F
C10	1-107-418-11	s	CAPACITOR,CHIP ELECT 10MF 35V
C11	1-131-661-11	s	CAPACITOR,ELECT 100MF/10V CHIP
C12	1-131-661-11	s	CAPACITOR,ELECT 100MF/10V CHIP
C51	1-113-986-11	s	CAPACITOR,TANTALUM 2.2MF/25V
C52	1-113-986-11	s	CAPACITOR,TANTALUM 2.2MF/25V
C100	1-126-394-11	s	CAPACITOR,ELECT 10MF/16V(CHIP)
C101	1-164-156-11	s	CAPACITOR,CERAMIC 0.1MF/25V F
C105	1-164-156-11	s	CAPACITOR,CERAMIC 0.1MF/25V F
C106	1-164-156-11	s	CAPACITOR,CERAMIC 0.1MF/25V F
C107	1-164-156-11	s	CAPACITOR,CERAMIC 0.1MF/25V F
C108	1-164-156-11	s	CAPACITOR,CERAMIC 0.1MF/25V F
C109	1-164-156-11	s	CAPACITOR,CERAMIC 0.1MF/25V F
C110	1-164-156-11	s	CAPACITOR,CERAMIC 0.1MF/25V F
C111	1-164-156-11	s	CAPACITOR,CERAMIC 0.1MF/25V F
C112	1-164-156-11	s	CAPACITOR,CERAMIC 0.1MF/25V F
C113	1-164-156-11	s	CAPACITOR,CERAMIC 0.1MF/25V F
C115	1-164-156-11	s	CAPACITOR,CERAMIC 0.1MF/25V F
C116	1-164-156-11	s	CAPACITOR,CERAMIC 0.1MF/25V F
C200	1-164-156-11	s	CAPACITOR,CERAMIC 0.1MF/25V F
C201	1-131-661-11	s	CAPACITOR,ELECT 100MF/10V CHIP
C202	1-126-394-11	s	CAPACITOR,ELECT 10MF/16V(CHIP)
C203	1-164-156-11	s	CAPACITOR,CERAMIC 0.1MF/25V F
C204	1-164-156-11	s	CAPACITOR,CERAMIC 0.1MF/25V F
C205	1-164-156-11	s	CAPACITOR,CERAMIC 0.1MF/25V F
C206	1-164-156-11	s	CAPACITOR,CERAMIC 0.1MF/25V F
C207	1-164-156-11	s	CAPACITOR,CERAMIC 0.1MF/25V F
C208	1-126-394-11	s	CAPACITOR,ELECT 10MF/16V(CHIP)
C209	1-164-156-11	s	CAPACITOR,CERAMIC 0.1MF/25V F
C210	1-164-156-11	s	CAPACITOR,CERAMIC 0.1MF/25V F
C211	1-164-156-11	s	CAPACITOR,CERAMIC 0.1MF/25V F
C212	1-164-156-11	s	CAPACITOR,CERAMIC 0.1MF/25V F
C213	1-164-156-11	s	CAPACITOR,CERAMIC 0.1MF/25V F
C214	1-164-156-11	s	CAPACITOR,CERAMIC 0.1MF/25V F
C215	1-164-156-11	s	CAPACITOR,CERAMIC 0.1MF/25V F
C216	1-164-156-11	s	CAPACITOR,CERAMIC 0.1MF/25V F
C217	1-164-156-11	s	CAPACITOR,CERAMIC 0.1MF/25V F
C218	1-126-394-11	s	CAPACITOR,ELECT 10MF/16V(CHIP)
C300	1-126-394-11	s	CAPACITOR,ELECT 10MF/16V(CHIP)
C301	1-164-156-11	s	CAPACITOR,CERAMIC 0.1MF/25V F
C302	1-164-156-11	s	CAPACITOR,CERAMIC 0.1MF/25V F
C303	1-164-156-11	s	CAPACITOR,CERAMIC 0.1MF/25V F
C304	1-164-156-11	s	CAPACITOR,CERAMIC 0.1MF/25V F
C305	1-164-156-11	s	CAPACITOR,CERAMIC 0.1MF/25V F
C306	1-164-156-11	s	CAPACITOR,CERAMIC 0.1MF/25V F
C307	1-164-156-11	s	CAPACITOR,CERAMIC 0.1MF/25V F

(EPR-1BA BOARD [SUFFIX 14] for MSW PLAYER)

Ref. No. or Q'ty	Part No.	SP	Description
C308	1-164-156-11	s	CAPACITOR,CERAMIC 0.1MF/25V F
C309	1-164-156-11	s	CAPACITOR,CERAMIC 0.1MF/25V F
C310	1-164-156-11	s	CAPACITOR,CERAMIC 0.1MF/25V F
C311	1-164-156-11	s	CAPACITOR,CERAMIC 0.1MF/25V F
C312	1-164-156-11	s	CAPACITOR,CERAMIC 0.1MF/25V F
C313	1-164-156-11	s	CAPACITOR,CERAMIC 0.1MF/25V F
C314	1-164-156-11	s	CAPACITOR,CERAMIC 0.1MF/25V F
C315	1-126-394-11	s	CAPACITOR,ELECT 10MF/16V(CHIP)
C401	1-164-156-11	s	CAPACITOR,CERAMIC 0.1MF/25V F
C402	1-164-156-11	s	CAPACITOR,CERAMIC 0.1MF/25V F
C403	1-164-156-11	s	CAPACITOR,CERAMIC 0.1MF/25V F
C404	1-164-156-11	s	CAPACITOR,CERAMIC 0.1MF/25V F
C405	1-164-156-11	s	CAPACITOR,CERAMIC 0.1MF/25V F
C406	1-164-156-11	s	CAPACITOR,CERAMIC 0.1MF/25V F
C407	1-164-156-11	s	CAPACITOR,CERAMIC 0.1MF/25V F
C408	1-164-156-11	s	CAPACITOR,CERAMIC 0.1MF/25V F
C409	1-164-156-11	s	CAPACITOR,CERAMIC 0.1MF/25V F
C410	1-164-156-11	s	CAPACITOR,CERAMIC 0.1MF/25V F
C411	1-164-156-11	s	CAPACITOR,CERAMIC 0.1MF/25V F
C412	1-164-156-11	s	CAPACITOR,CERAMIC 0.1MF/25V F
C413	1-164-156-11	s	CAPACITOR,CERAMIC 0.1MF/25V F
C414	1-164-156-11	s	CAPACITOR,CERAMIC 0.1MF/25V F
C415	1-164-156-11	s	CAPACITOR,CERAMIC 0.1MF/25V F
C416	1-164-156-11	s	CAPACITOR,CERAMIC 0.1MF/25V F
C417	1-164-156-11	s	CAPACITOR,CERAMIC 0.1MF/25V F
C418	1-164-156-11	s	CAPACITOR,CERAMIC 0.1MF/25V F
C419	1-126-394-11	s	CAPACITOR,ELECT 10MF/16V(CHIP)
C420	1-164-156-11	s	CAPACITOR,CERAMIC 0.1MF/25V F
C421	1-126-394-11	s	CAPACITOR,ELECT 10MF/16V(CHIP)
C422	1-164-156-11	s	CAPACITOR,CERAMIC 0.1MF/25V F
C423	1-164-156-11	s	CAPACITOR,CERAMIC 0.1MF/25V F
C424	1-164-156-11	s	CAPACITOR,CERAMIC 0.1MF/25V F
C425	1-164-156-11	s	CAPACITOR,CERAMIC 0.1MF/25V F
C426	1-164-156-11	s	CAPACITOR,CERAMIC 0.1MF/25V F
C427	1-164-156-11	s	CAPACITOR,CERAMIC 0.1MF/25V F
C428	1-164-156-11	s	CAPACITOR,CERAMIC 0.1MF/25V F
C429	1-164-156-11	s	CAPACITOR,CERAMIC 0.1MF/25V F
C430	1-164-156-11	s	CAPACITOR,CERAMIC 0.1MF/25V F
C431	1-164-156-11	s	CAPACITOR,CERAMIC 0.1MF/25V F
C432	1-164-156-11	s	CAPACITOR,CERAMIC 0.1MF/25V F
C433	1-164-156-11	s	CAPACITOR,CERAMIC 0.1MF/25V F
C434	1-164-156-11	s	CAPACITOR,CERAMIC 0.1MF/25V F
C435	1-164-156-11	s	CAPACITOR,CERAMIC 0.1MF/25V F
C436	1-164-156-11	s	CAPACITOR,CERAMIC 0.1MF/25V F
C437	1-164-156-11	s	CAPACITOR,CERAMIC 0.1MF/25V F
C438	1-164-156-11	s	CAPACITOR,CERAMIC 0.1MF/25V F
C500	1-164-156-11	s	CAPACITOR,CERAMIC 0.1MF/25V F
C510	1-164-156-11	s	CAPACITOR,CERAMIC 0.1MF/25V F
C514	1-164-156-11	s	CAPACITOR,CERAMIC 0.1MF/25V F
C537	1-126-394-11	s	CAPACITOR,ELECT 10MF/16V(CHIP)
C538	1-164-156-11	s	CAPACITOR,CERAMIC 0.1MF/25V F
C543	1-164-156-11	s	CAPACITOR,CERAMIC 0.1MF/25V F
C544	1-128-414-11	s	CAPACITOR ELECT 220MF/6.3V
C548	1-126-394-11	s	CAPACITOR,ELECT 10MF/16V(CHIP)
C549	1-128-416-11	s	CAPACITOR ELECT 100MF/16V(105C
C600	1-164-156-11	s	CAPACITOR,CERAMIC 0.1MF/25V F
C601	1-165-897-11	s	CAPACIOR, TANTALUM ELECT 22MF
C602	1-164-156-11	s	CAPACITOR,CERAMIC 0.1MF/25V F
C603	1-164-156-11	s	CAPACITOR,CERAMIC 0.1MF/25V F

(EPR-1BA BOARD [SUFFIX 14] for MSW PLAYER)

Ref. No. or Q'ty	Part No.	SP	Description
C604	1-137-934-11	s	CAPACITOR, CHIP TANTALUM 47MF
C605	1-164-156-11	s	CAPACITOR,CERAMIC 0.1MF/25V F
C606	1-164-156-11	s	CAPACITOR,CERAMIC 0.1MF/25V F
C607	1-164-156-11	s	CAPACITOR,CERAMIC 0.1MF/25V F
C608	1-164-156-11	s	CAPACITOR,CERAMIC 0.1MF/25V F
C609	1-164-156-11	s	CAPACITOR,CERAMIC 0.1MF/25V F
C610	1-164-156-11	s	CAPACITOR,CERAMIC 0.1MF/25V F
C611	1-164-156-11	s	CAPACITOR,CERAMIC 0.1MF/25V F
C612	1-162-915-11	s	CAPACITOR,CERAMIC 10PF/50V CH
C613	1-164-156-11	s	CAPACITOR,CERAMIC 0.1MF/25V F
C614	1-164-156-11	s	CAPACITOR,CERAMIC 0.1MF/25V F
C615	1-164-156-11	s	CAPACITOR,CERAMIC 0.1MF/25V F
C616	1-164-156-11	s	CAPACITOR,CERAMIC 0.1MF/25V F
C617	1-164-156-11	s	CAPACITOR,CERAMIC 0.1MF/25V F
C618	1-128-590-11	s	CAPACITOR ELECT 100MF/6.3V(105
C619	1-164-156-11	s	CAPACITOR,CERAMIC 0.1MF/25V F
C620	1-164-156-11	s	CAPACITOR,CERAMIC 0.1MF/25V F
C621	1-164-156-11	s	CAPACITOR,CERAMIC 0.1MF/25V F
C622	1-164-156-11	s	CAPACITOR,CERAMIC 0.1MF/25V F
C623	1-164-156-11	s	CAPACITOR,CERAMIC 0.1MF/25V F
C624	1-162-911-11	s	CAPACITOR,CERAMIC 6PF/50V 1608
C625	1-164-156-11	s	CAPACITOR,CERAMIC 0.1MF/25V F
C626	1-164-156-11	s	CAPACITOR,CERAMIC 0.1MF/25V F
C627	1-164-156-11	s	CAPACITOR,CERAMIC 0.1MF/25V F
C628	1-164-156-11	s	CAPACITOR,CERAMIC 0.1MF/25V F
C629	1-164-156-11	s	CAPACITOR,CERAMIC 0.1MF/25V F
C630	1-164-156-11	s	CAPACITOR,CERAMIC 0.1MF/25V F
C631	1-164-156-11	s	CAPACITOR,CERAMIC 0.1MF/25V F
C632	1-164-156-11	s	CAPACITOR,CERAMIC 0.1MF/25V F
C633	1-164-156-11	s	CAPACITOR,CERAMIC 0.1MF/25V F
C634	1-164-156-11	s	CAPACITOR,CERAMIC 0.1MF/25V F
C635	1-137-910-11	s	CAPACITOR,TANTALUM ELECT 10MF
C636	1-164-156-11	s	CAPACITOR,CERAMIC 0.1MF/25V F
C637	1-164-156-11	s	CAPACITOR,CERAMIC 0.1MF/25V F
C638	1-162-907-11	s	CAPACITOR,CERAMIC 2PF/50V(CK)
C639	1-162-907-11	s	CAPACITOR,CERAMIC 2PF/50V(CK)
C640	1-164-156-11	s	CAPACITOR,CERAMIC 0.1MF/25V F
C642	1-164-230-11	s	CAPACITOR,CERAMIC 220PF/50V
C643	1-164-230-11	s	CAPACITOR,CERAMIC 220PF/50V
C644	1-113-986-11	s	CAPACITOR,TANTALUM 2.2MF/25V
C645	1-113-986-11	s	CAPACITOR,TANTALUM 2.2MF/25V
C646	1-164-156-11	s	CAPACITOR,CERAMIC 0.1MF/25V F
C647	1-164-156-11	s	CAPACITOR,CERAMIC 0.1MF/25V F
C648	1-164-156-11	s	CAPACITOR,CERAMIC 0.1MF/25V F
C701	1-164-156-11	s	CAPACITOR,CERAMIC 0.1MF/25V F
C702	1-126-394-11	s	CAPACITOR,ELECT 10MF/16V(CHIP)
C703	1-164-156-11	s	CAPACITOR,CERAMIC 0.1MF/25V F
C704	1-164-156-11	s	CAPACITOR,CERAMIC 0.1MF/25V F
C705	1-164-156-11	s	CAPACITOR,CERAMIC 0.1MF/25V F
C706	1-164-156-11	s	CAPACITOR,CERAMIC 0.1MF/25V F
C707	1-164-156-11	s	CAPACITOR,CERAMIC 0.1MF/25V F
C708	1-164-156-11	s	CAPACITOR,CERAMIC 0.1MF/25V F
C709	1-164-156-11	s	CAPACITOR,CERAMIC 0.1MF/25V F
C710	1-164-156-11	s	CAPACITOR,CERAMIC 0.1MF/25V F
C711	1-164-156-11	s	CAPACITOR,CERAMIC 0.1MF/25V F
C712	1-164-156-11	s	CAPACITOR,CERAMIC 0.1MF/25V F
C714	1-164-156-11	s	CAPACITOR,CERAMIC 0.1MF/25V F
C715	1-164-156-11	s	CAPACITOR,CERAMIC 0.1MF/25V F
C717	1-164-156-11	s	CAPACITOR,CERAMIC 0.1MF/25V F

(EPR-1BA BOARD [SUFFIX 14] for MSW PLAYER)

Ref. No. or Q'ty	Part No.	SP	Description
C801	1-164-156-11	s	CAPACITOR,CERAMIC 0.1MF/25V F
C802	1-164-156-11	s	CAPACITOR,CERAMIC 0.1MF/25V F
C803	1-164-156-11	s	CAPACITOR,CERAMIC 0.1MF/25V F
C805	1-164-156-11	s	CAPACITOR,CERAMIC 0.1MF/25V F
C806	1-164-156-11	s	CAPACITOR,CERAMIC 0.1MF/25V F
C808	1-164-156-11	s	CAPACITOR,CERAMIC 0.1MF/25V F
C810	1-164-156-11	s	CAPACITOR,CERAMIC 0.1MF/25V F
C901	1-126-394-11	s	CAPACITOR,ELECT 10MF/16V(CHIP)
C902	1-126-394-11	s	CAPACITOR,ELECT 10MF/16V(CHIP)
C903	1-164-156-11	s	CAPACITOR,CERAMIC 0.1MF/25V F
C904	1-164-156-11	s	CAPACITOR,CERAMIC 0.1MF/25V F
C905	1-164-156-11	s	CAPACITOR,CERAMIC 0.1MF/25V F
C906	1-164-156-11	s	CAPACITOR,CERAMIC 0.1MF/25V F
C907	1-164-156-11	s	CAPACITOR,CERAMIC 0.1MF/25V F
C908	1-164-156-11	s	CAPACITOR,CERAMIC 0.1MF/25V F
C909	1-164-156-11	s	CAPACITOR,CERAMIC 0.1MF/25V F
C910	1-164-156-11	s	CAPACITOR,CERAMIC 0.1MF/25V F
C911	1-164-156-11	s	CAPACITOR,CERAMIC 0.1MF/25V F
C912	1-164-156-11	s	CAPACITOR,CERAMIC 0.1MF/25V F
C913	1-164-156-11	s	CAPACITOR,CERAMIC 0.1MF/25V F
C914	1-164-156-11	s	CAPACITOR,CERAMIC 0.1MF/25V F
C915	1-164-156-11	s	CAPACITOR,CERAMIC 0.1MF/25V F
C916	1-164-156-11	s	CAPACITOR,CERAMIC 0.1MF/25V F
CN1	1-580-789-21	o	PIN,CONNECTOR (SMD) 6P
CN600	1-764-243-11	o	CONNECTOR (COAXIAL)
CN601	1-764-243-11	o	CONNECTOR (COAXIAL)
D600	8-719-820-41	s	DIODE 1SS302
D601	8-719-820-41	s	DIODE 1SS302
D602	8-719-820-41	s	DIODE 1SS302
D603	8-719-820-41	s	DIODE 1SS302
F1	⚠ 1-576-270-11	s	FUSE CHIP 4A/125V (6125)
F2	⚠ 1-576-270-11	s	FUSE CHIP 4A/125V (6125)
F3	⚠ 1-576-270-11	s	FUSE CHIP 4A/125V (6125)
FB507	1-414-864-11	s	INDUCTOR, MICRO (CHIP TYPE)
FB600	1-414-864-11	s	INDUCTOR, MICRO (CHIP TYPE)
FB601	1-414-864-11	s	INDUCTOR, MICRO (CHIP TYPE)
FB602	1-414-864-11	s	INDUCTOR, MICRO (CHIP TYPE)
FB603	1-414-864-11	s	INDUCTOR, MICRO (CHIP TYPE)
IC1	8-759-523-81	s	IC TC74VHC08FT(EL)
IC2	8-759-533-85	s	IC L88M05T-FA-TL
IC100	8-759-392-77	s	IC SN74LVC245APW (E20)
IC101	8-759-549-15	s	IC SN74LV245APWR
IC102	8-759-549-15	s	IC SN74LV245APWR
IC103	8-759-392-77	s	IC SN74LVC245APW (E20)
IC104	8-759-524-07	s	IC TC74VHC138FT(EL)
IC105	8-759-549-15	s	IC SN74LV245APWR
IC106	8-759-549-15	s	IC SN74LV245APWR
IC107	8-759-549-15	s	IC SN74LV245APWR
IC109	8-759-524-07	s	IC TC74VHC138FT(EL)
IC111	8-752-392-03	s	IC CXD1095BR
IC112	8-759-523-81	s	IC TC74VHC08FT(EL)
IC113	8-759-523-94	s	IC TC74VHC32FT(EL)
IC114	8-759-549-01	s	IC SN74LV125APWR
IC115	8-759-549-15	s	IC SN74LV245APWR
IC200	8-759-696-35	s	IC TPS7101QDR
IC300	8-759-656-31	o	IC CXD9094AR
IC401	6-702-238-11	s	IC HY57V643220CT-7TR
IC500	8-759-490-41	s	IC TC74VHCT541AFT(EL)

(EPR-1BA BOARD [SUFFIX 14] for MSW PLAYER)

Ref. No. or Q'ty	Part No.	SP	Description
IC501	8-759-251-40	s	IC MB88E346PFV-G-BND-ER
IC502	8-759-549-01	s	IC SN74LV125APWR
IC506	8-759-460-72	s	IC BA033FP
IC508	8-759-533-85	s	IC L88M05T-FA-TL
IC600	8-752-078-32	s	IC CXB1341R
IC601	8-759-337-40	s	IC NJM2904V(TE2)
IC602	8-759-523-95	s	IC TC74VHC74FT(EL)
IC603	8-759-447-77	s	IC TC7WH74FU (TE12R)
IC604	8-759-491-46	s	IC TC74VHCT04AFT (EL)
IC605	8-759-523-96	s	IC TC74VHC86FT (EL)
IC701	8-759-392-77	s	IC SN74LVC245APW (E20)
IC702	8-759-524-52	s	IC TC74VHC574FT(EL)
IC703	8-759-524-52	s	IC TC74VHC574FT(EL)
IC704	8-759-524-52	s	IC TC74VHC574FT(EL)
IC705	8-759-392-77	s	IC SN74LVC245APW (E20)
IC706	8-759-549-15	s	IC SN74LV245APWR
IC708	8-759-549-15	s	IC SN74LV245APWR
IC709	8-759-549-15	s	IC SN74LV245APWR
IC710	8-759-524-29	s	IC TC74VHC257FT(EL)
IC711	8-759-524-10	s	IC TC74VHC157FT (EL)
IC714	8-759-549-15	s	IC SN74LV245APWR
IC716	8-759-475-47	s	IC TC74LCX244FT(EL)
IC717	8-759-392-77	s	IC SN74LVC245APW (E20)
IC718	8-759-524-10	s	IC TC74VHC157FT (EL)
IC813	8-759-712-31	s	IC SN65LVDT388DBTR
IC814	8-759-712-31	s	IC SN65LVDT388DBTR
IC816	8-759-712-31	s	IC SN65LVDT388DBTR
IC817	8-759-712-32	s	IC SN65LVDS389DBTR
IC818	8-759-712-32	s	IC SN65LVDS389DBTR
IC819	8-759-712-32	s	IC SN65LVDS389DBTR
IC820	8-759-524-10	s	IC TC74VHC157FT (EL)
IC902	8-759-524-27	s	IC TC74VHC244FT(EL)
L1	1-406-864-21	s	COIL,CHOKE 4.7UH
L100	1-410-803-11	s	INDUCTOR,CHIP 0.047UH (3225)
L101	1-410-803-11	s	INDUCTOR,CHIP 0.047UH (3225)
L700	1-410-803-11	s	INDUCTOR,CHIP 0.047UH (3225)
L701	1-410-803-11	s	INDUCTOR,CHIP 0.047UH (3225)
L800	1-410-803-11	s	INDUCTOR,CHIP 0.047UH (3225)
L801	1-410-803-11	s	INDUCTOR,CHIP 0.047UH (3225)
Q1	8-729-928-81	s	TRANSISTOR DTC144EE
Q51	8-729-140-63	s	TRANSISTOR 2SA1611-M5M6
Q52	8-729-045-53	s	TRANSISTOR SI4431DY-T1
Q600	8-729-143-13	s	TRANSISTOR 2SC4176-B34
Q601	8-729-043-92	s	TRANSISTOR 2SC5084-0(TE85L)
Q602	8-729-143-13	s	TRANSISTOR 2SC4176-B34
Q603	8-729-140-63	s	TRANSISTOR 2SA1611-M5M6
Q604	8-729-043-92	s	TRANSISTOR 2SC5084-0(TE85L)
Q605	8-729-043-92	s	TRANSISTOR 2SC5084-0(TE85L)
Q606	8-729-043-92	s	TRANSISTOR 2SC5084-0(TE85L)
R51	1-218-692-11	s	RESISTOR,CHIP 1.0K 1/16W(1608)
R52	1-218-692-11	s	RESISTOR,CHIP 1.0K 1/16W(1608)
R53	1-218-680-11	s	RESISTOR,CHIP 330 1/16W(1608)
R54	1-218-680-11	s	RESISTOR,CHIP 330 1/16W(1608)
R100	1-218-740-11	s	RESISTOR,CHIP 100K 1/16W(1608)
R101	1-218-740-11	s	RESISTOR,CHIP 100K 1/16W(1608)
R102	1-218-708-11	s	RESISTOR,CHIP 4.7K 1/16W(1608)
R104	1-216-864-11	s	CONDUCTOR, CHIP (1608)
R106	1-218-740-11	s	RESISTOR,CHIP 100K 1/16W(1608)

(EPR-1BA BOARD [SUFFIX 14] for MSW PLAYER)

Ref. No. or Q'ty	Part No.	SP	Description
R107	1-216-864-11	s	CONDUCTOR, CHIP (1608)
R108	1-216-864-11	s	CONDUCTOR, CHIP (1608)
R109	1-218-652-11	s	RESISTOR,CHIP 22 1/16W (1608)
R110	1-218-652-11	s	RESISTOR,CHIP 22 1/16W (1608)
R111	1-218-660-91	s	RESISTOR,CHIP 47 1/16W (1608)
R112	1-218-660-91	s	RESISTOR,CHIP 47 1/16W (1608)
R113	1-218-660-91	s	RESISTOR,CHIP 47 1/16W (1608)
R114	1-218-660-91	s	RESISTOR,CHIP 47 1/16W (1608)
R115	1-218-660-91	s	RESISTOR,CHIP 47 1/16W (1608)
R116	1-218-660-91	s	RESISTOR,CHIP 47 1/16W (1608)
R119	1-216-864-11	s	CONDUCTOR, CHIP (1608)
R120	1-216-864-11	s	CONDUCTOR, CHIP (1608)
R121	1-216-864-11	s	CONDUCTOR, CHIP (1608)
R122	1-216-864-11	s	CONDUCTOR, CHIP (1608)
R124	1-216-864-11	s	CONDUCTOR, CHIP (1608)
R125	1-216-864-11	s	CONDUCTOR, CHIP (1608)
R126	1-216-864-11	s	CONDUCTOR, CHIP (1608)
R200	1-218-748-11	s	RESISTOR,CHIP 220K 1/16W(1608)
R201	1-218-680-11	s	RESISTOR,CHIP 330 1/16W(1608)
R202	1-218-726-11	s	RESISTOR CHIP 27K 1/16W (1608)
R203	1-218-740-11	s	RESISTOR,CHIP 100K 1/16W(1608)
R204	1-218-716-11	s	RESISTOR,CHIP 10K 1/16W(1608)
R205	1-216-864-11	s	CONDUCTOR, CHIP (1608)
R206	1-218-660-91	s	RESISTOR,CHIP 47 1/16W (1608)
R207	1-218-660-91	s	RESISTOR,CHIP 47 1/16W (1608)
R208	1-218-668-11	s	RESISTOR,CHIP 100 1/16W (1608)
R209	1-216-864-11	s	CONDUCTOR, CHIP (1608)
R210	1-216-864-11	s	CONDUCTOR, CHIP (1608)
R211	1-216-864-11	s	CONDUCTOR, CHIP (1608)
R212	1-216-864-11	s	CONDUCTOR, CHIP (1608)
R213	1-216-864-11	s	CONDUCTOR, CHIP (1608)
R214	1-216-864-11	s	CONDUCTOR, CHIP (1608)
R215	1-216-864-11	s	CONDUCTOR, CHIP (1608)
R216	1-218-655-91	s	RESISTOR,CHIP 30 1/16W(1608)
R300	1-216-864-11	s	CONDUCTOR, CHIP (1608)
R301	1-216-864-11	s	CONDUCTOR, CHIP (1608)
R302	1-218-668-11	s	RESISTOR,CHIP 100 1/16W (1608)
R303	1-218-668-11	s	RESISTOR,CHIP 100 1/16W (1608)
R305	1-216-864-11	s	CONDUCTOR, CHIP (1608)
R306	1-216-864-11	s	CONDUCTOR, CHIP (1608)
R307	1-218-716-11	s	RESISTOR,CHIP 10K 1/16W(1608)
R308	1-216-864-11	s	CONDUCTOR, CHIP (1608)
R309	1-218-660-91	s	RESISTOR,CHIP 47 1/16W (1608)
R310	1-218-660-91	s	RESISTOR,CHIP 47 1/16W (1608)
R311	1-218-660-91	s	RESISTOR,CHIP 47 1/16W (1608)
R312	1-218-660-91	s	RESISTOR,CHIP 47 1/16W (1608)
R331	1-218-668-11	s	RESISTOR,CHIP 100 1/16W (1608)
R337	1-216-864-11	s	CONDUCTOR, CHIP (1608)
R374	1-216-864-11	s	CONDUCTOR, CHIP (1608)
R400	1-218-668-11	s	RESISTOR,CHIP 100 1/16W (1608)
R401	1-218-668-11	s	RESISTOR,CHIP 100 1/16W (1608)
R402	1-218-668-11	s	RESISTOR,CHIP 100 1/16W (1608)
R403	1-216-864-11	s	CONDUCTOR, CHIP (1608)
R405	1-216-864-11	s	CONDUCTOR, CHIP (1608)
R409	1-218-692-11	s	RESISTOR,CHIP 1.0K 1/16W(1608)
R500	1-218-740-11	s	RESISTOR,CHIP 100K 1/16W(1608)
R501	1-218-740-11	s	RESISTOR,CHIP 100K 1/16W(1608)
R502	1-218-740-11	s	RESISTOR,CHIP 100K 1/16W(1608)
R505	1-218-740-11	s	RESISTOR,CHIP 100K 1/16W(1608)

(EPR-1BA BOARD [SUFFIX 14] for MSW PLAYER)

Ref. No. or Q'ty	Part No.	SP	Description
R600	1-218-668-11	s	RESISTOR,CHIP 100 1/16W (1608)
R601	1-218-668-11	s	RESISTOR,CHIP 100 1/16W (1608)
R603	1-218-720-11	s	RESISTOR,CHIP 15K 1/16W(1608)
R604	1-218-720-11	s	RESISTOR,CHIP 15K 1/16W(1608)
R606	1-218-718-11	s	RESISTOR CHIP 12K 1/16W (1608)
R608	1-218-696-11	s	RESISTOR,CHIP 1.5K 1/16W(1608)
R609	1-218-684-11	s	RESISTOR,CHIP 470 1/16W (1608)
R610	1-218-711-11	s	RESISTOR,METAL 6.2K 1/16W
R611	1-218-692-11	s	RESISTOR,CHIP 1.0K 1/16W(1608)
R612	1-218-701-11	s	RESISTOR,CHIP 2.4K 1/16W(1608)
R613	1-218-710-11	s	RESISTOR,CHIP 5.6K 1/16W(1608)
R614	1-218-678-11	s	RESISTOR CHIP 270 1/16W (1608)
R615	1-218-660-91	s	RESISTOR,CHIP 47 1/16W (1608)
R617	1-218-678-11	s	RESISTOR CHIP 270 1/16W (1608)
R618	1-218-678-11	s	RESISTOR CHIP 270 1/16W (1608)
R619	1-218-660-91	s	RESISTOR,CHIP 47 1/16W (1608)
R620	1-218-674-11	s	RESISTOR CHIP 180 1/16W (1608)
R621	1-218-660-91	s	RESISTOR,CHIP 47 1/16W (1608)
R622	1-218-678-11	s	RESISTOR CHIP 270 1/16W (1608)
R623	1-218-664-11	s	RESISTOR,CHIP 68 1/16W (1608)
R624	1-218-653-11	s	RESISTOR,CHIP 24 1/16W (1608)
R625	1-218-659-11	s	RESISTOR,CHIP 43 1/16W (1608)
R626	1-218-674-11	s	RESISTOR CHIP 180 1/16W (1608)
R627	1-218-660-91	s	RESISTOR,CHIP 47 1/16W (1608)
R628	1-218-711-11	s	RESISTOR,METAL 6.2K 1/16W
R629	1-218-716-11	s	RESISTOR,CHIP 10K 1/16W(1608)
R630	1-218-664-11	s	RESISTOR,CHIP 68 1/16W (1608)
R631	1-218-653-11	s	RESISTOR,CHIP 24 1/16W (1608)
R632	1-218-710-11	s	RESISTOR,CHIP 5.6K 1/16W(1608)
R633	1-218-712-11	s	RESISTOR,METAL 6.8K 1/16W
R634	1-218-660-91	s	RESISTOR,CHIP 47 1/16W (1608)
R635	1-218-660-91	s	RESISTOR,CHIP 47 1/16W (1608)
R637	1-218-660-91	s	RESISTOR,CHIP 47 1/16W (1608)
R638	1-218-700-11	s	RESISTOR,CHIP 2.2K 1/16W(1608)
R639	1-218-660-91	s	RESISTOR,CHIP 47 1/16W (1608)
R640	1-218-672-11	s	RESISTOR,CHIP 150 1/16W(1608)
R641	1-218-660-91	s	RESISTOR,CHIP 47 1/16W (1608)
R643	1-218-672-11	s	RESISTOR,CHIP 150 1/16W(1608)
R644	1-218-700-11	s	RESISTOR,CHIP 2.2K 1/16W(1608)
R645	1-218-692-11	s	RESISTOR,CHIP 1.0K 1/16W(1608)
R646	1-218-700-11	s	RESISTOR,CHIP 2.2K 1/16W(1608)
R647	1-218-664-11	s	RESISTOR,CHIP 68 1/16W (1608)
R648	1-218-664-11	s	RESISTOR,CHIP 68 1/16W (1608)
R649	1-218-692-11	s	RESISTOR,CHIP 1.0K 1/16W(1608)
R650	1-218-722-11	s	RESISTOR, CHIP 18K 1/16W 1608
R651	1-218-722-11	s	RESISTOR, CHIP 18K 1/16W 1608
R652	1-218-740-11	s	RESISTOR,CHIP 100K 1/16W(1608)
R653	1-218-740-11	s	RESISTOR,CHIP 100K 1/16W(1608)
R700	1-216-864-11	s	CONDUCTOR, CHIP (1608)
R705	1-218-676-11	s	RESISTOR,CHIP 220 1/16W(1608)
R707	1-218-716-11	s	RESISTOR,CHIP 10K 1/16W(1608)
R708	1-218-660-91	s	RESISTOR,CHIP 47 1/16W (1608)
R709	1-218-660-91	s	RESISTOR,CHIP 47 1/16W (1608)
R715	1-218-660-91	s	RESISTOR,CHIP 47 1/16W (1608)
R716	1-218-660-91	s	RESISTOR,CHIP 47 1/16W (1608)
R717	1-218-660-91	s	RESISTOR,CHIP 47 1/16W (1608)
R718	1-218-660-91	s	RESISTOR,CHIP 47 1/16W (1608)
R720	1-218-660-91	s	RESISTOR,CHIP 47 1/16W (1608)
R721	1-218-660-91	s	RESISTOR,CHIP 47 1/16W (1608)

(EPR-1BA BOARD [SUFFIX 14] for MSW PLAYER)

Ref. No. or Q'ty	Part No.	SP	Description
R722	1-218-660-91	s	RESISTOR,CHIP 47 1/16W (1608)
R723	1-218-660-91	s	RESISTOR,CHIP 47 1/16W (1608)
R725	1-216-864-11	s	CONDUCTOR, CHIP (1608)
R726	1-218-652-11	s	RESISTOR,CHIP 22 1/16W (1608)
R727	1-218-652-11	s	RESISTOR,CHIP 22 1/16W (1608)
R728	1-218-652-11	s	RESISTOR,CHIP 22 1/16W (1608)
R729	1-218-652-11	s	RESISTOR,CHIP 22 1/16W (1608)
R730	1-218-652-11	s	RESISTOR,CHIP 22 1/16W (1608)
R731	1-218-652-11	s	RESISTOR,CHIP 22 1/16W (1608)
R732	1-218-652-11	s	RESISTOR,CHIP 22 1/16W (1608)
R760	1-218-644-11	s	RESISTOR,CHIP 10 1/16W
R761	1-218-644-11	s	RESISTOR,CHIP 10 1/16W
R762	1-218-668-11	s	RESISTOR,CHIP 100 1/16W (1608)
R763	1-218-644-11	s	RESISTOR,CHIP 10 1/16W
R764	1-218-644-11	s	RESISTOR,CHIP 10 1/16W
R765	1-218-644-11	s	RESISTOR,CHIP 10 1/16W
R766	1-218-668-11	s	RESISTOR,CHIP 100 1/16W (1608)
R767	1-218-668-11	s	RESISTOR,CHIP 100 1/16W (1608)
R768	1-218-668-11	s	RESISTOR,CHIP 100 1/16W (1608)
R769	1-218-668-11	s	RESISTOR,CHIP 100 1/16W (1608)
R770	1-216-864-11	s	CONDUCTOR, CHIP (1608)
R771	1-216-864-11	s	CONDUCTOR, CHIP (1608)
R772	1-216-864-11	s	CONDUCTOR, CHIP (1608)
R780	1-218-668-11	s	RESISTOR,CHIP 100 1/16W (1608)
R781	1-218-668-11	s	RESISTOR,CHIP 100 1/16W (1608)
R782	1-218-668-11	s	RESISTOR,CHIP 100 1/16W (1608)
R783	1-216-864-11	s	CONDUCTOR, CHIP (1608)
R800	1-218-740-11	s	RESISTOR,CHIP 100K 1/16W(1608)
R801	1-218-740-11	s	RESISTOR,CHIP 100K 1/16W(1608)
R802	1-218-668-11	s	RESISTOR,CHIP 100 1/16W (1608)
R803	1-218-668-11	s	RESISTOR,CHIP 100 1/16W (1608)
R804	1-218-668-11	s	RESISTOR,CHIP 100 1/16W (1608)
R805	1-218-668-11	s	RESISTOR,CHIP 100 1/16W (1608)
R827	1-218-660-91	s	RESISTOR,CHIP 47 1/16W (1608)
R834	1-216-864-11	s	CONDUCTOR, CHIP (1608)
R835	1-216-864-11	s	CONDUCTOR, CHIP (1608)
R836	1-216-864-11	s	CONDUCTOR, CHIP (1608)
R837	1-216-864-11	s	CONDUCTOR, CHIP (1608)
R838	1-216-864-11	s	CONDUCTOR, CHIP (1608)
R901	1-218-644-11	s	RESISTOR,CHIP 10 1/16W
R903	1-218-644-11	s	RESISTOR,CHIP 10 1/16W
R904	1-216-864-11	s	CONDUCTOR, CHIP (1608)
R905	1-218-668-11	s	RESISTOR,CHIP 100 1/16W (1608)
R906	1-218-668-11	s	RESISTOR,CHIP 100 1/16W (1608)
R907	1-218-668-11	s	RESISTOR,CHIP 100 1/16W (1608)
R908	1-216-864-11	s	CONDUCTOR, CHIP (1608)
R909	1-216-864-11	s	CONDUCTOR, CHIP (1608)
R910	1-216-864-11	s	CONDUCTOR, CHIP (1608)
R911	1-216-864-11	s	CONDUCTOR, CHIP (1608)
R912	1-216-864-11	s	CONDUCTOR, CHIP (1608)
R913	1-216-864-11	s	CONDUCTOR, CHIP (1608)
R914	1-216-864-11	s	CONDUCTOR, CHIP (1608)
R915	1-216-864-11	s	CONDUCTOR, CHIP (1608)
R917	1-216-864-11	s	CONDUCTOR, CHIP (1608)
R918	1-216-864-11	s	CONDUCTOR, CHIP (1608)
R919	1-216-864-11	s	CONDUCTOR, CHIP (1608)
R920	1-218-680-11	s	RESISTOR,CHIP 330 1/16W(1608)
R921	1-218-708-11	s	RESISTOR,CHIP 4.7K 1/16W(1608)
R922	1-218-644-11	s	RESISTOR,CHIP 10 1/16W

(EPR-1BA BOARD [SUFFIX 14] for MSW PLAYER)

Ref. No. or Q'ty	Part No.	SP	Description
R924	1-216-864-11	s	CONDUCTOR, CHIP (1608)
RB100	1-234-397-11	s	NETWORK, RES (8 GANG) 100K
RB101	1-234-397-11	s	NETWORK, RES (8 GANG) 100K
RB102	1-234-397-11	s	NETWORK, RES (8 GANG) 100K
RB103	1-234-397-11	s	NETWORK, RES (8 GANG) 100K
RB104	1-239-412-11	s	NETWORK, RESISTOR 100 (1608)
RB105	1-239-412-11	s	NETWORK, RESISTOR 100 (1608)
RB106	1-236-907-11	s	RESISTOR BLOCK 100K (1608)
RB108	1-234-397-11	s	NETWORK, RES (8 GANG) 100K
RB109	1-234-397-11	s	NETWORK, RES (8 GANG) 100K
RB110	1-234-397-11	s	NETWORK, RES (8 GANG) 100K
RB111	1-234-397-11	s	NETWORK, RES (8 GANG) 100K
RB112	1-234-397-11	s	NETWORK, RES (8 GANG) 100K
RB113	1-239-621-11	s	NETWORK RESISTOR 22 (1608)
RB114	1-239-621-11	s	NETWORK RESISTOR 22 (1608)
RB115	1-239-621-11	s	NETWORK RESISTOR 22 (1608)
RB116	1-239-621-11	s	NETWORK RESISTOR 22 (1608)
RB117	1-239-621-11	s	NETWORK RESISTOR 22 (1608)
RB118	1-239-621-11	s	NETWORK RESISTOR 22 (1608)
RB120	1-239-409-11	s	RESISTOR NETWORK 47 (1608)
RB121	1-236-907-11	s	RESISTOR BLOCK 100K (1608)
RB122	1-236-907-11	s	RESISTOR BLOCK 100K (1608)
RB200	1-236-904-11	s	RESISTOR NETWORK 1K (1608)
RB201	1-236-904-11	s	RESISTOR NETWORK 1K (1608)
RB202	1-236-904-11	s	RESISTOR NETWORK 1K (1608)
RB300	1-239-409-11	s	RESISTOR NETWORK 47 (1608)
RB301	1-239-409-11	s	RESISTOR NETWORK 47 (1608)
RB302	1-239-409-11	s	RESISTOR NETWORK 47 (1608)
RB303	1-239-409-11	s	RESISTOR NETWORK 47 (1608)
RB400	1-239-711-11	s	NETWORK, RESISTOR 0 (1608)
RB401	1-239-711-11	s	NETWORK, RESISTOR 0 (1608)
RB402	1-239-711-11	s	NETWORK, RESISTOR 0 (1608)
RB600	1-239-412-11	s	NETWORK, RESISTOR 100 (1608)
RB601	1-239-412-11	s	NETWORK, RESISTOR 100 (1608)
RB700	1-234-522-91	s	NETWORK,RESISTOR (8 GANG) 220
RB701	1-234-522-91	s	NETWORK,RESISTOR (8 GANG) 220
RB704	1-239-409-11	s	RESISTOR NETWORK 47 (1608)
RB705	1-239-409-11	s	RESISTOR NETWORK 47 (1608)
RB708	1-239-409-11	s	RESISTOR NETWORK 47 (1608)
RB709	1-239-409-11	s	RESISTOR NETWORK 47 (1608)
RB710	1-239-409-11	s	RESISTOR NETWORK 47 (1608)
RB711	1-239-412-11	s	NETWORK, RESISTOR 100 (1608)
RB712	1-233-477-11	s	NETWORK, RES (8 GANG) 1K
RB713	1-233-477-11	s	NETWORK, RES (8 GANG) 1K
RB715	1-233-477-11	s	NETWORK, RES (8 GANG) 1K
RB717	1-233-270-11	o	RESISTOR, NETWORK (8 GANG) 10K
RB718	1-239-412-11	s	NETWORK, RESISTOR 100 (1608)
RB719	1-239-412-11	s	NETWORK, RESISTOR 100 (1608)
RB721	1-239-416-11	s	NETWORK,RESISTOR 220 (1608)
RB800	1-239-409-11	s	RESISTOR NETWORK 47 (1608)
RB801	1-239-409-11	s	RESISTOR NETWORK 47 (1608)
RB802	1-239-409-11	s	RESISTOR NETWORK 47 (1608)
RB803	1-239-409-11	s	RESISTOR NETWORK 47 (1608)
RB804	1-239-409-11	s	RESISTOR NETWORK 47 (1608)
RB805	1-233-477-11	s	NETWORK, RES (8 GANG) 1K
RB806	1-233-477-11	s	NETWORK, RES (8 GANG) 1K
RB809	1-236-904-11	s	RESISTOR NETWORK 1K (1608)
RB810	1-239-409-11	s	RESISTOR NETWORK 47 (1608)

(EPR-1BA BOARD [SUFFIX 14] for MSW PLAYER)

Ref. No. or Q'ty	Part No.	SP	Description
RB811	1-233-270-11	o	RESISTOR, NETWORK (8 GANG) 10K
RB901	1-236-908-11	s	RESISTOR,NETWORK 10K (3216)

EPR-1BA BOARD [SUFFIX 15, 16] for MSW PLAYER

[Lot No. 381 - 554] MSW-M2100/P
[Lot No. 495 - 554] MSW-M2100E/P

*1: [Lot No. 381 - 554] [Board No. suffix 15, 16]
*2: [Lot No. 421 - 554] [Board No. suffix 16]

Ref. No. or Q'ty	Part No.	SP	Description
1pc	A-8345-216-C	s	MOUNTED CIRCUIT BOARD, EPR-1BA
1pc	3-179-084-11	s	LEVER (R), C BOARD
1pc	3-179-085-11	s	LEVER (L), C BOARD
C1	1-127-692-11	s	CAP, CHIP CERAMIC 10MF B 3216
C4	1-107-826-11	s	CAPACITOR,CHIP CERAMIC 0.1MF
C5	1-127-692-11	s	CAP, CHIP CERAMIC 10MF B 3216
C6	1-127-692-11	s	CAP, CHIP CERAMIC 10MF B 3216
C11	1-165-811-11	s	CAPACITOR CHIP CERAMIC 22MF B
C12	1-165-811-11	s	CAPACITOR CHIP CERAMIC 22MF B
C51	1-127-861-11	s	CAP, CERAMIC 2.2MF B (3216)
C52	1-127-861-11	s	CAP, CERAMIC 2.2MF B (3216)
C61	1-127-861-11	s	CAP, CERAMIC 2.2MF B (3216)
C62	1-127-861-11	s	CAP, CERAMIC 2.2MF B (3216)
C100	1-127-692-11	s	CAP, CHIP CERAMIC 10MF B 3216
C101	1-107-826-11	s	CAPACITOR,CHIP CERAMIC 0.1MF
C102	1-127-692-11	s	CAP, CHIP CERAMIC 10MF B 3216
C104 *2	1-107-826-11	s	CAPACITOR,CHIP CERAMIC 0.1MF
C105	1-107-826-11	s	CAPACITOR,CHIP CERAMIC 0.1MF
C106	1-107-826-11	s	CAPACITOR,CHIP CERAMIC 0.1MF
C107 *2	1-107-826-11	s	CAPACITOR,CHIP CERAMIC 0.1MF
C108	1-107-826-11	s	CAPACITOR,CHIP CERAMIC 0.1MF
C109 *2	deleted		
*1	1-107-826-11	s	CAPACITOR,CHIP CERAMIC 0.1MF
C110	1-107-826-11	s	CAPACITOR,CHIP CERAMIC 0.1MF
C111	1-107-826-11	s	CAPACITOR,CHIP CERAMIC 0.1MF
C112	1-107-826-11	s	CAPACITOR,CHIP CERAMIC 0.1MF
C113	1-107-826-11	s	CAPACITOR,CHIP CERAMIC 0.1MF
C114 *2	1-107-826-11	s	CAPACITOR,CHIP CERAMIC 0.1MF
C115	1-107-826-11	s	CAPACITOR,CHIP CERAMIC 0.1MF
C116	1-107-826-11	s	CAPACITOR,CHIP CERAMIC 0.1MF
C200	1-107-826-11	s	CAPACITOR,CHIP CERAMIC 0.1MF
C201	1-165-811-11	s	CAPACITOR CHIP CERAMIC 22MF B
C202	1-165-811-11	s	CAPACITOR CHIP CERAMIC 22MF B
C203	1-107-826-11	s	CAPACITOR,CHIP CERAMIC 0.1MF
C204	1-107-826-11	s	CAPACITOR,CHIP CERAMIC 0.1MF
C205	1-107-826-11	s	CAPACITOR,CHIP CERAMIC 0.1MF
C206	1-107-826-11	s	CAPACITOR,CHIP CERAMIC 0.1MF
C207	1-107-826-11	s	CAPACITOR,CHIP CERAMIC 0.1MF
C208	1-127-692-11	s	CAP, CHIP CERAMIC 10MF B 3216
C209	1-107-826-11	s	CAPACITOR,CHIP CERAMIC 0.1MF
C210	1-107-826-11	s	CAPACITOR,CHIP CERAMIC 0.1MF
C211	1-107-826-11	s	CAPACITOR,CHIP CERAMIC 0.1MF
C212	1-107-826-11	s	CAPACITOR,CHIP CERAMIC 0.1MF
C213	1-107-826-11	s	CAPACITOR,CHIP CERAMIC 0.1MF
C214	1-107-826-11	s	CAPACITOR,CHIP CERAMIC 0.1MF
C215	1-107-826-11	s	CAPACITOR,CHIP CERAMIC 0.1MF
C216	1-107-826-11	s	CAPACITOR,CHIP CERAMIC 0.1MF
C217	1-107-826-11	s	CAPACITOR,CHIP CERAMIC 0.1MF
C218	1-127-692-11	s	CAP, CHIP CERAMIC 10MF B 3216
C300	1-127-692-11	s	CAP, CHIP CERAMIC 10MF B 3216
C301	1-107-826-11	s	CAPACITOR,CHIP CERAMIC 0.1MF
C302	1-107-826-11	s	CAPACITOR,CHIP CERAMIC 0.1MF
C303	1-107-826-11	s	CAPACITOR,CHIP CERAMIC 0.1MF
C304	1-107-826-11	s	CAPACITOR,CHIP CERAMIC 0.1MF

(EPR-1BA BOARD [SUFFIX 15, 16] for MSW PLAYER)

Ref. No. or Q'ty	Part No.	SP	Description
C305	1-107-826-11	s	CAPACITOR,CHIP CERAMIC 0.1MF
C306	1-107-826-11	s	CAPACITOR,CHIP CERAMIC 0.1MF
C307	1-107-826-11	s	CAPACITOR,CHIP CERAMIC 0.1MF
C308	1-107-826-11	s	CAPACITOR,CHIP CERAMIC 0.1MF
C309	1-107-826-11	s	CAPACITOR,CHIP CERAMIC 0.1MF
C310	1-107-826-11	s	CAPACITOR,CHIP CERAMIC 0.1MF
C311	1-107-826-11	s	CAPACITOR,CHIP CERAMIC 0.1MF
C312	1-107-826-11	s	CAPACITOR,CHIP CERAMIC 0.1MF
C313	1-107-826-11	s	CAPACITOR,CHIP CERAMIC 0.1MF
C314	1-107-826-11	s	CAPACITOR,CHIP CERAMIC 0.1MF
C315	1-127-692-11	s	CAP, CHIP CERAMIC 10MF B 3216
C401	1-107-826-11	s	CAPACITOR,CHIP CERAMIC 0.1MF
C402	1-107-826-11	s	CAPACITOR,CHIP CERAMIC 0.1MF
C403	1-107-826-11	s	CAPACITOR,CHIP CERAMIC 0.1MF
C404	1-107-826-11	s	CAPACITOR,CHIP CERAMIC 0.1MF
C405	1-107-826-11	s	CAPACITOR,CHIP CERAMIC 0.1MF
C406	1-107-826-11	s	CAPACITOR,CHIP CERAMIC 0.1MF
C407	1-107-826-11	s	CAPACITOR,CHIP CERAMIC 0.1MF
C408	1-107-826-11	s	CAPACITOR,CHIP CERAMIC 0.1MF
C409	1-107-826-11	s	CAPACITOR,CHIP CERAMIC 0.1MF
C410	1-107-826-11	s	CAPACITOR,CHIP CERAMIC 0.1MF
C411	1-107-826-11	s	CAPACITOR,CHIP CERAMIC 0.1MF
C412	1-107-826-11	s	CAPACITOR,CHIP CERAMIC 0.1MF
C413	1-107-826-11	s	CAPACITOR,CHIP CERAMIC 0.1MF
C414	1-107-826-11	s	CAPACITOR,CHIP CERAMIC 0.1MF
C415	1-107-826-11	s	CAPACITOR,CHIP CERAMIC 0.1MF
C416	1-107-826-11	s	CAPACITOR,CHIP CERAMIC 0.1MF
C417	1-107-826-11	s	CAPACITOR,CHIP CERAMIC 0.1MF
C418	1-107-826-11	s	CAPACITOR,CHIP CERAMIC 0.1MF
C419	1-127-692-11	s	CAP, CHIP CERAMIC 10MF B 3216
C420	1-107-826-11	s	CAPACITOR,CHIP CERAMIC 0.1MF
C421	1-127-692-11	s	CAP, CHIP CERAMIC 10MF B 3216
C422	1-107-826-11	s	CAPACITOR,CHIP CERAMIC 0.1MF
C423	1-107-826-11	s	CAPACITOR,CHIP CERAMIC 0.1MF
C424	1-107-826-11	s	CAPACITOR,CHIP CERAMIC 0.1MF
C425	1-107-826-11	s	CAPACITOR,CHIP CERAMIC 0.1MF
C426	1-107-826-11	s	CAPACITOR,CHIP CERAMIC 0.1MF
C427	1-107-826-11	s	CAPACITOR,CHIP CERAMIC 0.1MF
C428	1-107-826-11	s	CAPACITOR,CHIP CERAMIC 0.1MF
C429	1-107-826-11	s	CAPACITOR,CHIP CERAMIC 0.1MF
C430	1-107-826-11	s	CAPACITOR,CHIP CERAMIC 0.1MF
C431	1-107-826-11	s	CAPACITOR,CHIP CERAMIC 0.1MF
C432	1-107-826-11	s	CAPACITOR,CHIP CERAMIC 0.1MF
C433	1-107-826-11	s	CAPACITOR,CHIP CERAMIC 0.1MF
C434	1-107-826-11	s	CAPACITOR,CHIP CERAMIC 0.1MF
C435	1-107-826-11	s	CAPACITOR,CHIP CERAMIC 0.1MF
C436	1-107-826-11	s	CAPACITOR,CHIP CERAMIC 0.1MF
C437	1-107-826-11	s	CAPACITOR,CHIP CERAMIC 0.1MF
C438	1-107-826-11	s	CAPACITOR,CHIP CERAMIC 0.1MF
C500	1-107-826-11	s	CAPACITOR,CHIP CERAMIC 0.1MF
C510	1-107-826-11	s	CAPACITOR,CHIP CERAMIC 0.1MF
C514	1-107-826-11	s	CAPACITOR,CHIP CERAMIC 0.1MF
C530	1-107-826-11	s	CAPACITOR,CHIP CERAMIC 0.1MF
C537	1-107-826-11	s	CAPACITOR,CHIP CERAMIC 0.1MF
C538	1-107-826-11	s	CAPACITOR,CHIP CERAMIC 0.1MF
C543	1-107-826-11	s	CAPACITOR,CHIP CERAMIC 0.1MF
C544	1-165-811-11	s	CAPACITOR CHIP CERAMIC 22MF B
C548	1-107-826-11	s	CAPACITOR,CHIP CERAMIC 0.1MF
C549	1-165-811-11	s	CAPACITOR CHIP CERAMIC 22MF B

(EPR-1BA BOARD [SUFFIX 15, 16] for MSW PLAYER)

Ref. No. or Q'ty	Part No.	SP	Description
C600	1-107-826-11	s	CAPACITOR,CHIP CERAMIC 0.1MF
C601	1-165-811-11	s	CAPACITOR CHIP CERAMIC 22MF B
C602	1-107-826-11	s	CAPACITOR,CHIP CERAMIC 0.1MF
C603	1-107-826-11	s	CAPACITOR,CHIP CERAMIC 0.1MF
C604	1-165-811-11	s	CAPACITOR CHIP CERAMIC 22MF B
C605	1-107-826-11	s	CAPACITOR,CHIP CERAMIC 0.1MF
C606	1-107-826-11	s	CAPACITOR,CHIP CERAMIC 0.1MF
C607	1-107-826-11	s	CAPACITOR,CHIP CERAMIC 0.1MF
C608	1-107-826-11	s	CAPACITOR,CHIP CERAMIC 0.1MF
C609	1-107-826-11	s	CAPACITOR,CHIP CERAMIC 0.1MF
C610	1-107-826-11	s	CAPACITOR,CHIP CERAMIC 0.1MF
C611	1-107-826-11	s	CAPACITOR,CHIP CERAMIC 0.1MF
C612	1-162-915-11	s	CAPACITOR,CERAMIC 10PF/50V CH
C613	1-107-826-11	s	CAPACITOR,CHIP CERAMIC 0.1MF
C614	1-107-826-11	s	CAPACITOR,CHIP CERAMIC 0.1MF
C615	1-107-826-11	s	CAPACITOR,CHIP CERAMIC 0.1MF
C616	1-107-826-11	s	CAPACITOR,CHIP CERAMIC 0.1MF
C617	1-107-826-11	s	CAPACITOR,CHIP CERAMIC 0.1MF
C618	1-165-811-11	s	CAPACITOR CHIP CERAMIC 22MF B
C619	1-107-826-11	s	CAPACITOR,CHIP CERAMIC 0.1MF
C620	1-107-826-11	s	CAPACITOR,CHIP CERAMIC 0.1MF
C622	1-107-826-11	s	CAPACITOR,CHIP CERAMIC 0.1MF
C623	1-107-826-11	s	CAPACITOR,CHIP CERAMIC 0.1MF
C624	1-162-911-11	s	CAPACITOR,CERAMIC 6PF/50V 1608
C625	1-107-826-11	s	CAPACITOR,CHIP CERAMIC 0.1MF
C626	1-107-826-11	s	CAPACITOR,CHIP CERAMIC 0.1MF
C627	1-107-826-11	s	CAPACITOR,CHIP CERAMIC 0.1MF
C628	1-107-826-11	s	CAPACITOR,CHIP CERAMIC 0.1MF
C629	1-107-826-11	s	CAPACITOR,CHIP CERAMIC 0.1MF
C630	1-107-826-11	s	CAPACITOR,CHIP CERAMIC 0.1MF
C631	1-107-826-11	s	CAPACITOR,CHIP CERAMIC 0.1MF
C632	1-107-826-11	s	CAPACITOR,CHIP CERAMIC 0.1MF
C633	1-107-826-11	s	CAPACITOR,CHIP CERAMIC 0.1MF
C634	1-107-826-11	s	CAPACITOR,CHIP CERAMIC 0.1MF
C635	1-127-692-11	s	CAP, CHIP CERAMIC 10MF B 3216
C636	1-107-826-11	s	CAPACITOR,CHIP CERAMIC 0.1MF
C637	1-107-826-11	s	CAPACITOR,CHIP CERAMIC 0.1MF
C638	1-162-907-11	s	CAPACITOR,CERAMIC 2PF/50V(CK)
C639	1-162-907-11	s	CAPACITOR,CERAMIC 2PF/50V(CK)
C640	1-107-826-11	s	CAPACITOR,CHIP CERAMIC 0.1MF
C642	1-164-230-11	s	CAPACITOR,CERAMIC 220PF/50V
C643	*2 deleted		
	*1 1-164-230-11	s	CAPACITOR,CERAMIC 220PF/50V
C644	1-127-861-11	s	CAP, CERAMIC 2.2MF B (3216)
C645	*2 deleted		
	*1 1-127-861-11	s	CAP, CERAMIC 2.2MF B (3216)
C646	1-107-826-11	s	CAPACITOR,CHIP CERAMIC 0.1MF
C647	*2 deleted		
	*1 1-107-826-11	s	CAPACITOR,CHIP CERAMIC 0.1MF
C648	1-107-826-11	s	CAPACITOR,CHIP CERAMIC 0.1MF
C649	1-165-811-11	s	CAPACITOR CHIP CERAMIC 22MF B
C650	1-165-811-11	s	CAPACITOR CHIP CERAMIC 22MF B
C651	1-165-811-11	s	CAPACITOR CHIP CERAMIC 22MF B
C701	1-107-826-11	s	CAPACITOR,CHIP CERAMIC 0.1MF
C702	1-127-692-11	s	CAP, CHIP CERAMIC 10MF B 3216
C703	1-107-826-11	s	CAPACITOR,CHIP CERAMIC 0.1MF
C704	1-107-826-11	s	CAPACITOR,CHIP CERAMIC 0.1MF
C705	1-107-826-11	s	CAPACITOR,CHIP CERAMIC 0.1MF
C706	1-107-826-11	s	CAPACITOR,CHIP CERAMIC 0.1MF

(EPR-1BA BOARD [SUFFIX 15, 16] for MSW PLAYER)

Ref. No. or Q'ty	Part No.	SP	Description
C707	1-107-826-11	s	CAPACITOR,CHIP CERAMIC 0.1MF
C708 *2	deleted		
*1	1-107-826-11	s	CAPACITOR,CHIP CERAMIC 0.1MF
C709 *2	deleted		
*1	1-107-826-11	s	CAPACITOR,CHIP CERAMIC 0.1MF
C710 *2	deleted		
*1	1-107-826-11	s	CAPACITOR,CHIP CERAMIC 0.1MF
C711	1-107-826-11	s	CAPACITOR,CHIP CERAMIC 0.1MF
C712	1-107-826-11	s	CAPACITOR,CHIP CERAMIC 0.1MF
C714 *2	deleted		
*1	1-107-826-11	s	CAPACITOR,CHIP CERAMIC 0.1MF
C715	1-107-826-11	s	CAPACITOR,CHIP CERAMIC 0.1MF
C717	1-107-826-11	s	CAPACITOR,CHIP CERAMIC 0.1MF
C718	1-127-692-11	s	CAP, CHIP CERAMIC 10MF B 3216
C719 *2	1-107-826-11	s	CAPACITOR,CHIP CERAMIC 0.1MF
C720 *2	1-107-826-11	s	CAPACITOR,CHIP CERAMIC 0.1MF
C721 *2	1-127-692-11	s	CAP, CHIP CERAMIC 10MF B 3216
C801	1-107-826-11	s	CAPACITOR,CHIP CERAMIC 0.1MF
C802	1-107-826-11	s	CAPACITOR,CHIP CERAMIC 0.1MF
C803	1-107-826-11	s	CAPACITOR,CHIP CERAMIC 0.1MF
C805	1-107-826-11	s	CAPACITOR,CHIP CERAMIC 0.1MF
C806	1-107-826-11	s	CAPACITOR,CHIP CERAMIC 0.1MF
C808	1-107-826-11	s	CAPACITOR,CHIP CERAMIC 0.1MF
C810	1-107-826-11	s	CAPACITOR,CHIP CERAMIC 0.1MF
C811	1-127-692-11	s	CAP, CHIP CERAMIC 10MF B 3216
C812	1-127-692-11	s	CAP, CHIP CERAMIC 10MF B 3216
C901	1-127-692-11	s	CAP, CHIP CERAMIC 10MF B 3216
C902	1-127-692-11	s	CAP, CHIP CERAMIC 10MF B 3216
C903	1-107-826-11	s	CAPACITOR,CHIP CERAMIC 0.1MF
C904	1-107-826-11	s	CAPACITOR,CHIP CERAMIC 0.1MF
C905	1-107-826-11	s	CAPACITOR,CHIP CERAMIC 0.1MF
C906	1-107-826-11	s	CAPACITOR,CHIP CERAMIC 0.1MF
C907	1-107-826-11	s	CAPACITOR,CHIP CERAMIC 0.1MF
C908	1-107-826-11	s	CAPACITOR,CHIP CERAMIC 0.1MF
C909	1-107-826-11	s	CAPACITOR,CHIP CERAMIC 0.1MF
C910	1-107-826-11	s	CAPACITOR,CHIP CERAMIC 0.1MF
C911	1-107-826-11	s	CAPACITOR,CHIP CERAMIC 0.1MF
C912	1-107-826-11	s	CAPACITOR,CHIP CERAMIC 0.1MF
C913	1-107-826-11	s	CAPACITOR,CHIP CERAMIC 0.1MF
C914	1-107-826-11	s	CAPACITOR,CHIP CERAMIC 0.1MF
C915	1-107-826-11	s	CAPACITOR,CHIP CERAMIC 0.1MF
C916	1-107-826-11	s	CAPACITOR,CHIP CERAMIC 0.1MF
CN1	1-580-789-91	s	PIN, CONNECTOR 6P
CN600	1-764-243-11	o	CONNECTOR (COAXIAL)
CN601	1-764-243-11	o	CONNECTOR (COAXIAL)
D600	8-719-820-41	s	DIODE 1SS302
D601 *2	deleted		
*1	8-719-820-41	s	DIODE 1SS302
D602	8-719-820-41	s	DIODE 1SS302
D603 *2	deleted		
*1	8-719-820-41	s	DIODE 1SS302
E101	1-535-877-22	s	CHIP,CHECKER (TEST POINT)
E200 *2	deleted		
*1	1-535-877-22	s	CHIP,CHECKER (TEST POINT)
E201 *2	deleted		
*1	1-535-877-22	s	CHIP,CHECKER (TEST POINT)
E300	1-535-877-22	s	CHIP,CHECKER (TEST POINT)
E301	1-535-877-22	s	CHIP,CHECKER (TEST POINT)
E500	1-535-877-22	s	CHIP,CHECKER (TEST POINT)

(EPR-1BA BOARD [SUFFIX 15, 16] for MSW PLAYER)

Ref. No. or Q'ty	Part No.	SP	Description
E600	1-535-877-22	s	CHIP,CHECKER (TEST POINT)
E900 *2	deleted		
*1	1-535-877-22	s	CHIP,CHECKER (TEST POINT)
E1101 *2	1-535-877-22	s	CHIP,CHECKER (TEST POINT)
E1201 *2	1-535-877-22	s	CHIP,CHECKER (TEST POINT)
F1	⚠ 1-576-270-11	s	FUSE CHIP 4A/125V (6125)
F2	⚠ 1-576-270-11	s	FUSE CHIP 4A/125V (6125)
F3	⚠ 1-576-270-11	s	FUSE CHIP 4A/125V (6125)
FB507	1-414-864-11	s	INDUCTOR, MICRO (CHIP TYPE)
FB600	1-414-864-11	s	INDUCTOR, MICRO (CHIP TYPE)
FB601	1-414-864-11	s	INDUCTOR, MICRO (CHIP TYPE)
FB602	1-414-864-11	s	INDUCTOR, MICRO (CHIP TYPE)
FB603	1-414-864-11	s	INDUCTOR, MICRO (CHIP TYPE)
IC1	8-759-523-81	s	IC TC74VHC08FT(EL)
IC100	8-759-392-77	s	IC SN74LVC245APW (E20)
IC101	8-759-549-15	s	IC SN74LV245APWR
IC102	8-759-549-15	s	IC SN74LV245APWR
IC103	8-759-392-77	s	IC SN74LVC245APW (E20)
IC104	8-759-524-07	s	IC TC74VHC138FT(EL)
IC105 *2	deleted		
*1	8-759-549-15	s	IC SN74LV245APWR
IC106	8-759-549-15	s	IC SN74LV245APWR
IC107	8-759-549-15	s	IC SN74LV245APWR
IC108 *2	8-759-523-81	s	IC TC74VHC08FT(EL)
IC109	8-759-524-07	s	IC TC74VHC138FT(EL)
IC111	8-752-392-03	s	IC CXD1095BR
IC112	8-759-523-81	s	IC TC74VHC08FT(EL)
IC113	8-759-523-94	s	IC TC74VHC32FT(EL)
IC114 *2	8-759-497-44	s	IC TC7WH125FU(TE12R)
*1	8-759-549-01	s	IC SN74LV125APWR
IC115	8-759-549-15	s	IC SN74LV245APWR
IC116 *2	8-759-196-96	s	IC TC7SH08FU (TE85R)
IC200	8-759-696-35	s	IC TPS7101QDR
IC300	8-759-656-31	o	IC CXD9094AR
IC400 *2	deleted		
*1	8-759-836-54	s	IC CXD9139AGF
IC401	6-702-238-11	s	IC HY57V643220CT-7TR
IC500	8-759-490-41	s	IC TC74VHCT541AFT(EL)
IC501	8-759-672-76	s	IC AK9813BF-E2
IC502 *2	8-759-497-44	s	IC TC7WH125FU(TE12R)
*1	8-759-549-01	s	IC SN74LV125APWR
IC506	8-759-460-72	s	IC BA033FP
IC507	8-759-337-40	s	IC NJM2904V(TE2)
IC508	8-759-533-85	s	IC L88M05T-FA-TL
IC600	8-752-078-32	s	IC CXB1341R
IC602	8-759-523-95	s	IC TC74VHC74FT(EL)
IC603 *2	deleted		
*1	8-759-447-77	s	IC TC7WH74FU (TE12R)
IC604	8-759-491-46	s	IC TC74VHCT04AFT (EL)
IC605	8-759-523-96	s	IC TC74VHC86FT (EL)
IC701	8-759-392-77	s	IC SN74LVC245APW (E20)
IC702	8-759-524-52	s	IC TC74VHC574FT(EL)
IC703	8-759-524-52	s	IC TC74VHC574FT(EL)
IC704	8-759-524-52	s	IC TC74VHC574FT(EL)
IC705	8-759-392-77	s	IC SN74LVC245APW (E20)
IC706	8-759-549-15	s	IC SN74LV245APWR
IC707 *2	8-759-549-15	s	IC SN74LV245APWR
IC708	8-759-524-27	s	IC TC74VHC244FT(EL)
IC709 *2	deleted		
*1	8-759-549-15	s	IC SN74LV245APWR

(EPR-1BA BOARD [SUFFIX 15, 16] for MSW PLAYER)

Ref. No. or Q'ty	Part No.	SP	Description
IC710	8-759-524-29	s	IC TC74VHC257FT(EL)
IC711	8-759-524-10	s	IC TC74VHC157FT (EL)
IC714	8-759-549-15	s	IC SN74LV245APWR
IC716 *2	deleted		
*1	8-759-679-53	s	IC SN74LVC244APWR
IC717	8-759-392-77	s	IC SN74LVC245APW (E20)
IC718 *2	deleted		
*1	8-759-524-10	s	IC TC74VHC157FT (EL)
IC813	8-759-712-31	s	IC SN65LVDT388DBTR
IC814	8-759-712-31	s	IC SN65LVDT388DBTR
IC816	8-759-712-31	s	IC SN65LVDT388DBTR
IC817	8-759-712-32	s	IC SN65LVDS389DBTR
IC818	8-759-712-32	s	IC SN65LVDS389DBTR
IC819	8-759-712-32	s	IC SN65LVDS389DBTR
IC820	8-759-524-10	s	IC TC74VHC157FT (EL)
IC901 *2	6-704-718-01	s	IC XC18V02VQG44C
*1	8-759-678-90	s	IC XC18V02VQ44C
IC902	8-759-524-27	s	IC TC74VHC244FT(EL)
L100	1-412-923-21	s	INDUCTOR CHIP 0.047UH (2520)
L101	1-412-923-21	s	INDUCTOR CHIP 0.047UH (2520)
L700	1-412-923-21	s	INDUCTOR CHIP 0.047UH (2520)
L701	1-412-923-21	s	INDUCTOR CHIP 0.047UH (2520)
L702 *2	1-412-923-21	s	INDUCTOR CHIP 0.047UH (2520)
L800	1-412-923-21	s	INDUCTOR CHIP 0.047UH (2520)
L801	1-412-923-21	s	INDUCTOR CHIP 0.047UH (2520)
Q1	8-729-928-81	s	TRANSISTOR DTC144EE
Q51	8-729-928-19	s	TRANSISTOR 2SA1774R
Q52	8-729-047-32	s	TRANSISTOR SI4425DY-T1
Q61	8-729-928-19	s	TRANSISTOR 2SA1774R
Q62	8-729-047-32	s	TRANSISTOR SI4425DY-T1
Q600	8-729-043-92	s	TRANSISTOR 2SC5084-0(TE85L)
Q601	8-729-043-92	s	TRANSISTOR 2SC5084-0(TE85L)
Q603	8-729-928-19	s	TRANSISTOR 2SA1774R
Q604	8-729-043-92	s	TRANSISTOR 2SC5084-0(TE85L)
Q605	8-729-043-92	s	TRANSISTOR 2SC5084-0(TE85L)
Q606	8-729-043-92	s	TRANSISTOR 2SC5084-0(TE85L)
R51	1-218-847-11	s	RESISTOR, CHIP 1K 1/10W (1608)
R52	1-218-847-11	s	RESISTOR, CHIP 1K 1/10W (1608)
R53	1-218-835-11	s	RESISTOR,CHIP 330 1/10W (1608)
R54	1-218-835-11	s	RESISTOR,CHIP 330 1/10W (1608)
R61	1-218-847-11	s	RESISTOR, CHIP 1K 1/10W (1608)
R62	1-218-847-11	s	RESISTOR, CHIP 1K 1/10W (1608)
R63	1-218-835-11	s	RESISTOR,CHIP 330 1/10W (1608)
R64	1-218-835-11	s	RESISTOR,CHIP 330 1/10W (1608)
R100	1-218-895-11	s	RESISTOR,CHIP 100K 1/10W(1608)
R101	1-218-895-11	s	RESISTOR,CHIP 100K 1/10W(1608)
R102	1-218-863-11	s	RESISTOR,CHIP 4.7K 1/10W(1608)
R104	1-216-864-11	s	CONDUCTOR, CHIP (1608)
R106	1-218-895-11	s	RESISTOR,CHIP 100K 1/10W(1608)
R107 *2	1-211-977-11	s	RESISTOR,CHIP 22 1/10W (1608)
*1	1-216-864-11	s	CONDUCTOR, CHIP (1608)
R108	1-216-864-11	s	CONDUCTOR, CHIP (1608)
R109	1-211-977-11	s	RESISTOR,CHIP 22 1/10W (1608)
R110	1-211-977-11	s	RESISTOR,CHIP 22 1/10W (1608)
R111 *2	deleted		
*1	1-211-985-11	s	RESISTOR,CHIP 47 1/10W (1608)
R112 *2	deleted		
*1	1-211-985-11	s	RESISTOR,CHIP 47 1/10W (1608)
R113 *2	deleted		
*1	1-211-985-11	s	RESISTOR,CHIP 47 1/10W (1608)

(EPR-1BA BOARD [SUFFIX 15, 16] for MSW PLAYER)

Ref. No. or Q'ty	Part No.	SP	Description
R114 *2	deleted		
*1	1-211-985-11	s	RESISTOR,CHIP 47 1/10W (1608)
R115 *2	deleted		
*1	1-211-985-11	s	RESISTOR,CHIP 47 1/10W (1608)
R116 *2	deleted		
*1	1-211-985-11	s	RESISTOR,CHIP 47 1/10W (1608)
R119	1-216-864-11	s	CONDUCTOR, CHIP (1608)
R120	1-216-864-11	s	CONDUCTOR, CHIP (1608)
R121	1-216-864-11	s	CONDUCTOR, CHIP (1608)
R122	1-216-864-11	s	CONDUCTOR, CHIP (1608)
R124 *2	deleted		
*1	1-216-864-11	s	CONDUCTOR, CHIP (1608)
R125 *2	1-216-864-11	s	CONDUCTOR, CHIP (1608)
R126	1-216-864-11	s	CONDUCTOR, CHIP (1608)
R128 *2	1-218-895-11	s	RESISTOR,CHIP 100K 1/10W(1608)
R200	1-218-903-11	s	RESISTOR,CHIP 220K 1/10W(1608)
R201	1-218-835-11	s	RESISTOR,CHIP 330 1/10W (1608)
R202	1-218-881-11	s	RESISTOR, CHIP 27K 1/10W(1608)
R203	1-218-895-11	s	RESISTOR,CHIP 100K 1/10W(1608)
R204	1-218-871-11	s	RESISTOR,CHIP 10K 1/10W (1608)
R205	1-216-864-11	s	CONDUCTOR, CHIP (1608)
R206	1-211-985-11	s	RESISTOR,CHIP 47 1/10W (1608)
R207	1-211-985-11	s	RESISTOR,CHIP 47 1/10W (1608)
R208	1-218-823-11	s	RESISTOR,CHIP 100 1/10W (1608)
R209	1-216-864-11	s	CONDUCTOR, CHIP (1608)
R210	1-216-864-11	s	CONDUCTOR, CHIP (1608)
R211	1-216-864-11	s	CONDUCTOR, CHIP (1608)
R212	1-216-864-11	s	CONDUCTOR, CHIP (1608)
R213	1-216-864-11	s	CONDUCTOR, CHIP (1608)
R214	1-216-864-11	s	CONDUCTOR, CHIP (1608)
R215	1-216-864-11	s	CONDUCTOR, CHIP (1608)
R216	1-211-980-11	s	RESISTOR,CHIP 30 1/10W(1608)
R217	1-218-446-11	s	RESISTOR,CHIP 1 (1608)
R218	1-218-446-11	s	RESISTOR,CHIP 1 (1608)
R219	1-218-446-11	s	RESISTOR,CHIP 1 (1608)
R220 *2	1-211-985-11	s	RESISTOR,CHIP 47 1/10W (1608)
R221 *2	1-218-847-11	s	RESISTOR, CHIP 1K 1/10W (1608)
R222 *2	1-218-847-11	s	RESISTOR, CHIP 1K 1/10W (1608)
R300	1-216-864-11	s	CONDUCTOR, CHIP (1608)
R301	1-216-864-11	s	CONDUCTOR, CHIP (1608)
R302	1-218-823-11	s	RESISTOR,CHIP 100 1/10W (1608)
R303	1-218-823-11	s	RESISTOR,CHIP 100 1/10W (1608)
R305	1-216-864-11	s	CONDUCTOR, CHIP (1608)
R306	1-216-864-11	s	CONDUCTOR, CHIP (1608)
R307	1-218-871-11	s	RESISTOR,CHIP 10K 1/10W (1608)
R308	1-216-864-11	s	CONDUCTOR, CHIP (1608)
R309	1-211-985-11	s	RESISTOR,CHIP 47 1/10W (1608)
R310	1-211-985-11	s	RESISTOR,CHIP 47 1/10W (1608)
R311	1-211-985-11	s	RESISTOR,CHIP 47 1/10W (1608)
R312	1-211-985-11	s	RESISTOR,CHIP 47 1/10W (1608)
R331	1-218-823-11	s	RESISTOR,CHIP 100 1/10W (1608)
R337 *2	deleted		
*1	1-218-823-11	s	RESISTOR,CHIP 100 1/10W (1608)
R374	1-216-864-11	s	CONDUCTOR, CHIP (1608)
R400	1-218-823-11	s	RESISTOR,CHIP 100 1/10W (1608)
R401	1-218-823-11	s	RESISTOR,CHIP 100 1/10W (1608)
R402	1-218-823-11	s	RESISTOR,CHIP 100 1/10W (1608)
R403 *2	deleted		
*1	1-216-864-11	s	CONDUCTOR, CHIP (1608)
R405 *2	deleted		
*1	1-216-864-11	s	CONDUCTOR, CHIP (1608)

(EPR-1BA BOARD [SUFFIX 15, 16] for MSW PLAYER)

Ref. No. or Q'ty	Part No.	SP	Description
R409	1-218-847-11	s	RESISTOR, CHIP 1K 1/10W (1608)
R500	1-218-895-11	s	RESISTOR,CHIP 100K 1/10W(1608)
R501	1-218-895-11	s	RESISTOR,CHIP 100K 1/10W(1608)
R502	1-218-895-11	s	RESISTOR,CHIP 100K 1/10W(1608)
R505	1-218-895-11	s	RESISTOR,CHIP 100K 1/10W(1608)
R517	1-216-864-11	s	CONDUCTOR, CHIP (1608)
R518	1-216-864-11	s	CONDUCTOR, CHIP (1608)
R551	1-218-446-11	s	RESISTOR,CHIP 1 (1608)
R552	1-218-446-11	s	RESISTOR,CHIP 1 (1608)
R553	1-218-446-11	s	RESISTOR,CHIP 1 (1608)
R554	1-218-446-11	s	RESISTOR,CHIP 1 (1608)
R555	1-218-446-11	s	RESISTOR,CHIP 1 (1608)
R556	1-218-446-11	s	RESISTOR,CHIP 1 (1608)
R557	1-216-864-11	s	CONDUCTOR, CHIP (1608)
R600	1-218-823-11	s	RESISTOR,CHIP 100 1/10W (1608)
R601	1-218-823-11	s	RESISTOR,CHIP 100 1/10W (1608)
R602 *2	1-216-864-11	s	CONDUCTOR, CHIP (1608)
R603	1-218-875-11	s	RESISTOR,CHIP 15K 1/10W (1608)
R604	1-218-875-11	s	RESISTOR,CHIP 15K 1/10W (1608)
R606	1-218-873-11	s	RESISTOR,CHIP 12K 1/10W (1608)
R608	1-218-851-11	s	RESISTOR,CHIP 1.5K 1/10W(1608)
R609	1-218-839-11	s	RESISTOR,CHIP 470 1/10W (1608)
R610	1-218-866-11	s	RESISTOR,CHIP 6.2K 1/10W(1608)
R611	1-218-847-11	s	RESISTOR, CHIP 1K 1/10W (1608)
R612	1-218-856-11	s	RESISTOR,CHIP 2.4K 1/10W(1608)
R613	1-218-865-11	s	RESISTOR,CHIP 5.6K 1/10W(1608)
R614	1-218-833-11	s	RESISTOR,CHIP 270 1/10W (1608)
R617	1-218-833-11	s	RESISTOR,CHIP 270 1/10W (1608)
R618	1-218-833-11	s	RESISTOR,CHIP 270 1/10W (1608)
R619	1-211-985-11	s	RESISTOR,CHIP 47 1/10W (1608)
R620	1-218-839-11	s	RESISTOR,CHIP 470 1/10W (1608)
R621	1-211-977-11	s	RESISTOR,CHIP 22 1/10W (1608)
R623	1-211-989-11	s	RESISTOR,CHIP 68 1/10W (1608)
R624	1-211-978-11	s	RESISTOR,CHIP 24 1/10W (1608)
R625	1-211-984-11	s	RESISTOR,CHIP 43 1/10W (1608)
R626	1-218-829-11	s	RESISTOR,CHIP 180 1/10W (1608)
R627	1-211-985-11	s	RESISTOR,CHIP 47 1/10W (1608)
R628	1-218-881-11	s	RESISTOR, CHIP 27K 1/10W(1608)
R629	1-218-871-11	s	RESISTOR,CHIP 10K 1/10W (1608)
R630	1-211-989-11	s	RESISTOR,CHIP 68 1/10W (1608)
R631	1-211-978-11	s	RESISTOR,CHIP 24 1/10W (1608)
R632	1-218-865-11	s	RESISTOR,CHIP 5.6K 1/10W(1608)
R633	1-218-867-11	s	RESISTOR,CHIP 6.8K 1/10W(1608)
R634	1-211-985-11	s	RESISTOR,CHIP 47 1/10W (1608)
R635	1-211-985-11	s	RESISTOR,CHIP 47 1/10W (1608)
R637	1-211-985-11	s	RESISTOR,CHIP 47 1/10W (1608)
R638	1-218-855-11	s	RESISTOR,CHIP 2.2K 1/10W(1608)
R639	1-211-985-11	s	RESISTOR,CHIP 47 1/10W (1608)
R640	1-218-827-11	s	RESISTOR,CHIP 150 1/10W (1608)
R641	1-211-985-11	s	RESISTOR,CHIP 47 1/10W (1608)
R643	1-218-827-11	s	RESISTOR,CHIP 150 1/10W (1608)
R644	1-218-855-11	s	RESISTOR,CHIP 2.2K 1/10W(1608)
R645	1-218-847-11	s	RESISTOR, CHIP 1K 1/10W (1608)
R646	1-218-855-11	s	RESISTOR,CHIP 2.2K 1/10W(1608)
R647	1-211-989-11	s	RESISTOR,CHIP 68 1/10W (1608)
R648	1-211-989-11	s	RESISTOR,CHIP 68 1/10W (1608)
R649	1-218-847-11	s	RESISTOR, CHIP 1K 1/10W (1608)
R650	1-218-877-11	s	RESISTOR,CHIP 18K 1/10W (1608)
R651 *2	1-216-864-11	s	CONDUCTOR, CHIP (1608)
*1	1-218-877-11	s	RESISTOR,CHIP 18K 1/10W (1608)

(EPR-1BA BOARD [SUFFIX 15, 16] for MSW PLAYER)

Ref. No. or Q'ty	Part No.	SP	Description
R652	1-218-895-11	s	RESISTOR,CHIP 100K 1/10W(1608)
R653 *2	1-216-864-11	s	CONDUCTOR, CHIP (1608)
*1	1-218-895-11	s	RESISTOR,CHIP 100K 1/10W(1608)
R700	1-216-864-11	s	CONDUCTOR, CHIP (1608)
R705	1-218-831-11	s	RESISTOR, CHIP 220 1/10W(1608)
R707 *2	deleted		
*1	1-218-871-11	s	RESISTOR,CHIP 10K 1/10W (1608)
R708	1-211-985-11	s	RESISTOR,CHIP 47 1/10W (1608)
R709	1-211-985-11	s	RESISTOR,CHIP 47 1/10W (1608)
R715	1-211-985-11	s	RESISTOR,CHIP 47 1/10W (1608)
R716	1-211-985-11	s	RESISTOR,CHIP 47 1/10W (1608)
R717	1-211-985-11	s	RESISTOR,CHIP 47 1/10W (1608)
R718	1-211-985-11	s	RESISTOR,CHIP 47 1/10W (1608)
R720	1-211-985-11	s	RESISTOR,CHIP 47 1/10W (1608)
R721	1-211-985-11	s	RESISTOR,CHIP 47 1/10W (1608)
R722	1-211-985-11	s	RESISTOR,CHIP 47 1/10W (1608)
R723 *2	1-216-864-11	s	CONDUCTOR, CHIP (1608)
*1	1-211-985-11	s	RESISTOR,CHIP 47 1/10W (1608)
R725 *2	deleted		
*1	1-216-864-11	s	CONDUCTOR, CHIP (1608)
R726 *2	deleted		
*1	1-211-977-11	s	RESISTOR,CHIP 22 1/10W (1608)
R727 *2	deleted		
*1	1-211-977-11	s	RESISTOR,CHIP 22 1/10W (1608)
R728 *2	deleted		
*1	1-211-977-11	s	RESISTOR,CHIP 22 1/10W (1608)
R729	1-211-977-11	s	RESISTOR,CHIP 22 1/10W (1608)
R730 *2	deleted		
*1	1-211-977-11	s	RESISTOR,CHIP 22 1/10W (1608)
R731	1-211-977-11	s	RESISTOR,CHIP 22 1/10W (1608)
R732	1-211-977-11	s	RESISTOR,CHIP 22 1/10W (1608)
R733 *2	1-211-977-11	s	RESISTOR,CHIP 22 1/10W (1608)
R736 *2	1-211-985-11	s	RESISTOR,CHIP 47 1/10W (1608)
R737 *2	1-211-977-11	s	RESISTOR,CHIP 22 1/10W (1608)
R760	1-211-969-11	s	RESISTOR,CHIP 10 1/10W (1608)
R761	1-211-969-11	s	RESISTOR,CHIP 10 1/10W (1608)
R762	1-218-823-11	s	RESISTOR,CHIP 100 1/10W (1608)
R763	1-211-969-11	s	RESISTOR,CHIP 10 1/10W (1608)
R764	1-211-969-11	s	RESISTOR,CHIP 10 1/10W (1608)
R765	1-211-969-11	s	RESISTOR,CHIP 10 1/10W (1608)
R766	1-218-823-11	s	RESISTOR,CHIP 100 1/10W (1608)
R767	1-218-823-11	s	RESISTOR,CHIP 100 1/10W (1608)
R768	1-218-823-11	s	RESISTOR,CHIP 100 1/10W (1608)
R769	1-218-823-11	s	RESISTOR,CHIP 100 1/10W (1608)
R770	1-216-864-11	s	CONDUCTOR, CHIP (1608)
R771	1-216-864-11	s	CONDUCTOR, CHIP (1608)
R772	1-216-864-11	s	CONDUCTOR, CHIP (1608)
R780	1-218-823-11	s	RESISTOR,CHIP 100 1/10W (1608)
R781	1-218-823-11	s	RESISTOR,CHIP 100 1/10W (1608)
R782	1-218-823-11	s	RESISTOR,CHIP 100 1/10W (1608)
R783	1-216-864-11	s	CONDUCTOR, CHIP (1608)
R800	1-218-895-11	s	RESISTOR,CHIP 100K 1/10W(1608)
R801	1-218-895-11	s	RESISTOR,CHIP 100K 1/10W(1608)
R802	1-218-823-11	s	RESISTOR,CHIP 100 1/10W (1608)
R803	1-218-823-11	s	RESISTOR,CHIP 100 1/10W (1608)
R804	1-218-823-11	s	RESISTOR,CHIP 100 1/10W (1608)
R805	1-218-823-11	s	RESISTOR,CHIP 100 1/10W (1608)
R827	1-211-985-11	s	RESISTOR,CHIP 47 1/10W (1608)
R834	1-216-864-11	s	CONDUCTOR, CHIP (1608)
R835	1-216-864-11	s	CONDUCTOR, CHIP (1608)

(EPR-1BA BOARD [SUFFIX 15, 16] for MSW PLAYER)

Ref. No. or Q'ty	Part No.	SP	Description
R836	1-216-864-11	s	CONDUCTOR, CHIP (1608)
R837	1-216-864-11	s	CONDUCTOR, CHIP (1608)
R838	1-216-864-11	s	CONDUCTOR, CHIP (1608)
R841 *2	1-218-823-11	s	RESISTOR,CHIP 100 1/10W (1608)
R842 *2	1-218-823-11	s	RESISTOR,CHIP 100 1/10W (1608)
R901	1-211-969-11	s	RESISTOR,CHIP 10 1/10W (1608)
R903 *2	deleted		
*1	1-211-969-11	s	RESISTOR,CHIP 10 1/10W (1608)
R904	1-216-864-11	s	CONDUCTOR, CHIP (1608)
R905	1-218-823-11	s	RESISTOR,CHIP 100 1/10W (1608)
R906	1-218-823-11	s	RESISTOR,CHIP 100 1/10W (1608)
R907	1-218-823-11	s	RESISTOR,CHIP 100 1/10W (1608)
R908	1-216-864-11	s	CONDUCTOR, CHIP (1608)
R909	1-216-864-11	s	CONDUCTOR, CHIP (1608)
R910	1-216-864-11	s	CONDUCTOR, CHIP (1608)
R911	1-216-864-11	s	CONDUCTOR, CHIP (1608)
R912	1-216-864-11	s	CONDUCTOR, CHIP (1608)
R913	1-216-864-11	s	CONDUCTOR, CHIP (1608)
R914	1-216-864-11	s	CONDUCTOR, CHIP (1608)
R915	1-216-864-11	s	CONDUCTOR, CHIP (1608)
R917	1-216-864-11	s	CONDUCTOR, CHIP (1608)
R918	1-216-864-11	s	CONDUCTOR, CHIP (1608)
R919	1-216-864-11	s	CONDUCTOR, CHIP (1608)
R920	1-218-835-11	s	RESISTOR,CHIP 330 1/10W (1608)
R921	1-218-863-11	s	RESISTOR,CHIP 4.7K 1/10W(1608)
R922	1-211-969-11	s	RESISTOR,CHIP 10 1/10W (1608)
R924	1-216-864-11	s	CONDUCTOR, CHIP (1608)
R926	1-216-864-11	s	CONDUCTOR, CHIP (1608)
R927 *2	1-216-864-11	s	CONDUCTOR, CHIP (1608)
R1133 *2	1-216-864-11	s	CONDUCTOR, CHIP (1608)
RB100	1-234-397-11	s	NETWORK, RES (8 GANG) 100K
RB101	1-234-397-11	s	NETWORK, RES (8 GANG) 100K
RB102	1-234-397-11	s	NETWORK, RES (8 GANG) 100K
RB103	1-234-397-11	s	NETWORK, RES (8 GANG) 100K
RB104	1-233-576-11	s	RESISTOR,CHIP NETWORK 100
RB105	1-233-576-11	s	RESISTOR,CHIP NETWORK 100
RB106	1-233-810-21	s	RES, NETWORK 100K (3216)
RB107 *2	1-239-409-11	s	RESISTOR NETWORK 47 (1608)
RB108	1-234-397-11	s	NETWORK, RES (8 GANG) 100K
RB109	1-234-397-11	s	NETWORK, RES (8 GANG) 100K
RB110	1-234-397-11	s	NETWORK, RES (8 GANG) 100K
RB111	1-234-397-11	s	NETWORK, RES (8 GANG) 100K
RB112	1-234-397-11	s	NETWORK, RES (8 GANG) 100K
RB113	1-233-575-11	s	RES, CHIP NETWORK 22
RB114	1-233-575-11	s	RES, CHIP NETWORK 22
RB115	1-233-575-11	s	RES, CHIP NETWORK 22
RB116	1-233-575-11	s	RES, CHIP NETWORK 22
RB117	1-233-575-11	s	RES, CHIP NETWORK 22
RB118	1-233-575-11	s	RES, CHIP NETWORK 22
RB119 *2	1-239-409-11	s	RESISTOR NETWORK 47 (1608)
RB120	1-239-409-11	s	RESISTOR NETWORK 47 (1608)
RB121	1-233-810-21	s	RES, NETWORK 100K (3216)
RB122	1-233-810-21	s	RES, NETWORK 100K (3216)
RB124 *2	1-233-810-21	s	RES, NETWORK 100K (3216)
RB200	1-233-412-11	s	RESISTOR,CHIP NETWORK 1K
RB201	1-233-412-11	s	RESISTOR,CHIP NETWORK 1K
RB202 *2	deleted		
*1	1-233-412-11	s	RESISTOR,CHIP NETWORK 1K
RB203 *2	1-239-409-11	s	RESISTOR NETWORK 47 (1608)

(EPR-1BA BOARD [SUFFIX 15, 16] for MSW PLAYER)

Ref. No. or Q'ty	Part No.	SP	Description
RB204 *2	1-239-409-11	s	RESISTOR NETWORK 47 (1608)
RB205 *2	1-239-409-11	s	RESISTOR NETWORK 47 (1608)
RB300	1-239-409-11	s	RESISTOR NETWORK 47 (1608)
RB301	1-239-409-11	s	RESISTOR NETWORK 47 (1608)
RB302	1-239-409-11	s	RESISTOR NETWORK 47 (1608)
RB303	1-239-409-11	s	RESISTOR NETWORK 47 (1608)
RB400	1-234-523-21	s	RESISTOR,CHIP NETWORK
RB401	1-234-523-21	s	RESISTOR,CHIP NETWORK
RB402	1-234-523-21	s	RESISTOR,CHIP NETWORK
RB600	1-233-576-11	s	RESISTOR,CHIP NETWORK 100
RB601	1-233-576-11	s	RESISTOR,CHIP NETWORK 100
RB700	1-234-522-91	s	NETWORK,RESISTOR (8 GANG) 220
RB701	1-234-522-91	s	NETWORK,RESISTOR (8 GANG) 220
RB703 *2	1-233-576-11	s	RESISTOR,CHIP NETWORK 100
RB704 *2	deleted		
*1	1-239-409-11	s	RESISTOR NETWORK 47 (1608)
RB705 *2	deleted		
*1	1-239-409-11	s	RESISTOR NETWORK 47 (1608)
RB708 *2	deleted		
*1	1-239-409-11	s	RESISTOR NETWORK 47 (1608)
RB709 *2	deleted		
*1	1-239-409-11	s	RESISTOR NETWORK 47 (1608)
RB710	1-239-409-11	s	RESISTOR NETWORK 47 (1608)
RB711	1-233-576-11	s	RESISTOR,CHIP NETWORK 100
RB712	1-233-477-11	s	NETWORK, RES (8 GANG) 1K
RB713	1-233-477-11	s	NETWORK, RES (8 GANG) 1K
RB714 *2	1-233-576-11	s	RESISTOR,CHIP NETWORK 100
RB715	1-233-477-11	s	NETWORK, RES (8 GANG) 1K
RB717 *2	deleted		
*1	1-233-270-11	s	RESISTOR, NETWORK (8 GANG) 10K
RB718 *2	deleted		
*1	1-233-576-11	s	RESISTOR,CHIP NETWORK 100
RB719	1-233-576-11	s	RESISTOR,CHIP NETWORK 100
RB721	1-233-411-11	s	RESISTOR,CHIP NETWORK 220/3216
RB800	1-239-409-11	s	RESISTOR NETWORK 47 (1608)
RB801	1-239-409-11	s	RESISTOR NETWORK 47 (1608)
RB802	1-239-409-11	s	RESISTOR NETWORK 47 (1608)
RB803	1-239-409-11	s	RESISTOR NETWORK 47 (1608)
RB804	1-239-409-11	s	RESISTOR NETWORK 47 (1608)
RB805	1-233-477-11	s	NETWORK, RES (8 GANG) 1K
RB806	1-233-477-11	s	NETWORK, RES (8 GANG) 1K
RB809	1-233-412-11	s	RESISTOR,CHIP NETWORK 1K
RB810	1-239-409-11	s	RESISTOR NETWORK 47 (1608)
RB811	1-233-270-11	s	RESISTOR, NETWORK (8 GANG) 10K
RB901	1-236-908-11	s	RESISTOR,NETWORK 10K (3216)
TP200	1-535-877-22	s	CHIP,CHECKER (TEST POINT)
TP201	1-535-877-22	s	CHIP,CHECKER (TEST POINT)
TP600	1-535-877-22	s	CHIP,CHECKER (TEST POINT)
TP703 *2	1-535-877-22	s	CHIP,CHECKER (TEST POINT)
TP704 *2	1-535-877-22	s	CHIP,CHECKER (TEST POINT)

EPR-1BA BOARD [SUFFIX 17-] for MSW PLAYER

[Lot No. 561 -] MSW-M2100/P, M2100E/P

Ref. No. or Q'ty	Part No.	SP	Description
1pc	A-8345-216-C	s	MOUNTED CIRCUIT BOARD, EPR-1BA
1pc	3-179-084-11	s	LEVER (R), C BOARD
1pc	3-179-085-11	s	LEVER (L), C BOARD
C1	1-127-692-91	s	CAP, CHIP CERAMIC 10MF B 3216
C4	1-107-826-11	s	CAPACITOR,CHIP CERAMIC 0.1MF
C5	1-127-692-91	s	CAP, CHIP CERAMIC 10MF B 3216
C6	1-127-692-91	s	CAP, CHIP CERAMIC 10MF B 3216
C11	1-165-811-11	s	CAPACITOR CHIP CERAMIC 22MF B
C12	1-165-811-11	s	CAPACITOR CHIP CERAMIC 22MF B
C51	1-127-861-11	s	CAP, CERAMIC 2.2MF B (3216)
C52	1-127-861-11	s	CAP, CERAMIC 2.2MF B (3216)
C61	1-127-861-11	s	CAP, CERAMIC 2.2MF B (3216)
C62	1-127-861-11	s	CAP, CERAMIC 2.2MF B (3216)
C100	1-127-692-91	s	CAP, CHIP CERAMIC 10MF B 3216
C101	1-107-826-11	s	CAPACITOR,CHIP CERAMIC 0.1MF
C102	1-127-692-91	s	CAP, CHIP CERAMIC 10MF B 3216
C104	1-107-826-11	s	CAPACITOR,CHIP CERAMIC 0.1MF
C105	1-107-826-11	s	CAPACITOR,CHIP CERAMIC 0.1MF
C106	1-107-826-11	s	CAPACITOR,CHIP CERAMIC 0.1MF
C107	1-107-826-11	s	CAPACITOR,CHIP CERAMIC 0.1MF
C108	1-107-826-11	s	CAPACITOR,CHIP CERAMIC 0.1MF
C110	1-107-826-11	s	CAPACITOR,CHIP CERAMIC 0.1MF
C111	1-107-826-11	s	CAPACITOR,CHIP CERAMIC 0.1MF
C112	1-107-826-11	s	CAPACITOR,CHIP CERAMIC 0.1MF
C113	1-107-826-11	s	CAPACITOR,CHIP CERAMIC 0.1MF
C114	1-107-826-11	s	CAPACITOR,CHIP CERAMIC 0.1MF
C115	1-107-826-11	s	CAPACITOR,CHIP CERAMIC 0.1MF
C116	1-107-826-11	s	CAPACITOR,CHIP CERAMIC 0.1MF
C200	1-107-826-11	s	CAPACITOR,CHIP CERAMIC 0.1MF
C201	1-165-811-11	s	CAPACITOR CHIP CERAMIC 22MF B
C202	1-165-811-11	s	CAPACITOR CHIP CERAMIC 22MF B
C203	1-107-826-11	s	CAPACITOR,CHIP CERAMIC 0.1MF
C204	1-107-826-11	s	CAPACITOR,CHIP CERAMIC 0.1MF
C205	1-107-826-11	s	CAPACITOR,CHIP CERAMIC 0.1MF
C206	1-107-826-11	s	CAPACITOR,CHIP CERAMIC 0.1MF
C207	1-107-826-11	s	CAPACITOR,CHIP CERAMIC 0.1MF
C208	1-127-692-91	s	CAP, CHIP CERAMIC 10MF B 3216
C209	1-107-826-11	s	CAPACITOR,CHIP CERAMIC 0.1MF
C210	1-107-826-11	s	CAPACITOR,CHIP CERAMIC 0.1MF
C211	1-107-826-11	s	CAPACITOR,CHIP CERAMIC 0.1MF
C212	1-107-826-11	s	CAPACITOR,CHIP CERAMIC 0.1MF
C213	1-107-826-11	s	CAPACITOR,CHIP CERAMIC 0.1MF
C214	1-107-826-11	s	CAPACITOR,CHIP CERAMIC 0.1MF
C215	1-107-826-11	s	CAPACITOR,CHIP CERAMIC 0.1MF
C216	1-107-826-11	s	CAPACITOR,CHIP CERAMIC 0.1MF
C217	1-107-826-11	s	CAPACITOR,CHIP CERAMIC 0.1MF
C218	1-127-692-91	s	CAP, CHIP CERAMIC 10MF B 3216
C300	1-127-692-91	s	CAP, CHIP CERAMIC 10MF B 3216
C301	1-107-826-11	s	CAPACITOR,CHIP CERAMIC 0.1MF
C302	1-107-826-11	s	CAPACITOR,CHIP CERAMIC 0.1MF
C303	1-107-826-11	s	CAPACITOR,CHIP CERAMIC 0.1MF
C304	1-107-826-11	s	CAPACITOR,CHIP CERAMIC 0.1MF
C305	1-107-826-11	s	CAPACITOR,CHIP CERAMIC 0.1MF
C306	1-107-826-11	s	CAPACITOR,CHIP CERAMIC 0.1MF
C307	1-107-826-11	s	CAPACITOR,CHIP CERAMIC 0.1MF
C308	1-107-826-11	s	CAPACITOR,CHIP CERAMIC 0.1MF
C309	1-107-826-11	s	CAPACITOR,CHIP CERAMIC 0.1MF

(EPR-1BA BOARD [SUFFIX 17-] for MSW PLAYER)

Ref. No. or Q'ty	Part No.	SP	Description
C310	1-107-826-11	s	CAPACITOR,CHIP CERAMIC 0.1MF
C311	1-107-826-11	s	CAPACITOR,CHIP CERAMIC 0.1MF
C312	1-107-826-11	s	CAPACITOR,CHIP CERAMIC 0.1MF
C313	1-107-826-11	s	CAPACITOR,CHIP CERAMIC 0.1MF
C314	1-107-826-11	s	CAPACITOR,CHIP CERAMIC 0.1MF
C315	1-127-692-91	s	CAP, CHIP CERAMIC 10MF B 3216
C401	1-107-826-11	s	CAPACITOR,CHIP CERAMIC 0.1MF
C402	1-107-826-11	s	CAPACITOR,CHIP CERAMIC 0.1MF
C403	1-107-826-11	s	CAPACITOR,CHIP CERAMIC 0.1MF
C404	1-107-826-11	s	CAPACITOR,CHIP CERAMIC 0.1MF
C405	1-107-826-11	s	CAPACITOR,CHIP CERAMIC 0.1MF
C406	1-107-826-11	s	CAPACITOR,CHIP CERAMIC 0.1MF
C407	1-107-826-11	s	CAPACITOR,CHIP CERAMIC 0.1MF
C408	1-107-826-11	s	CAPACITOR,CHIP CERAMIC 0.1MF
C409	1-107-826-11	s	CAPACITOR,CHIP CERAMIC 0.1MF
C410	1-107-826-11	s	CAPACITOR,CHIP CERAMIC 0.1MF
C411	1-107-826-11	s	CAPACITOR,CHIP CERAMIC 0.1MF
C412	1-107-826-11	s	CAPACITOR,CHIP CERAMIC 0.1MF
C413	1-107-826-11	s	CAPACITOR,CHIP CERAMIC 0.1MF
C414	1-107-826-11	s	CAPACITOR,CHIP CERAMIC 0.1MF
C415	1-107-826-11	s	CAPACITOR,CHIP CERAMIC 0.1MF
C416	1-107-826-11	s	CAPACITOR,CHIP CERAMIC 0.1MF
C417	1-107-826-11	s	CAPACITOR,CHIP CERAMIC 0.1MF
C418	1-107-826-11	s	CAPACITOR,CHIP CERAMIC 0.1MF
C419	1-127-692-91	s	CAP, CHIP CERAMIC 10MF B 3216
C420	1-107-826-11	s	CAPACITOR,CHIP CERAMIC 0.1MF
C421	1-127-692-91	s	CAP, CHIP CERAMIC 10MF B 3216
C422	1-107-826-11	s	CAPACITOR,CHIP CERAMIC 0.1MF
C423	1-107-826-11	s	CAPACITOR,CHIP CERAMIC 0.1MF
C424	1-107-826-11	s	CAPACITOR,CHIP CERAMIC 0.1MF
C425	1-107-826-11	s	CAPACITOR,CHIP CERAMIC 0.1MF
C426	1-107-826-11	s	CAPACITOR,CHIP CERAMIC 0.1MF
C427	1-107-826-11	s	CAPACITOR,CHIP CERAMIC 0.1MF
C428	1-107-826-11	s	CAPACITOR,CHIP CERAMIC 0.1MF
C429	1-107-826-11	s	CAPACITOR,CHIP CERAMIC 0.1MF
C430	1-107-826-11	s	CAPACITOR,CHIP CERAMIC 0.1MF
C431	1-107-826-11	s	CAPACITOR,CHIP CERAMIC 0.1MF
C432	1-107-826-11	s	CAPACITOR,CHIP CERAMIC 0.1MF
C433	1-107-826-11	s	CAPACITOR,CHIP CERAMIC 0.1MF
C434	1-107-826-11	s	CAPACITOR,CHIP CERAMIC 0.1MF
C435	1-107-826-11	s	CAPACITOR,CHIP CERAMIC 0.1MF
C436	1-107-826-11	s	CAPACITOR,CHIP CERAMIC 0.1MF
C437	1-107-826-11	s	CAPACITOR,CHIP CERAMIC 0.1MF
C438	1-107-826-11	s	CAPACITOR,CHIP CERAMIC 0.1MF
C500	1-107-826-11	s	CAPACITOR,CHIP CERAMIC 0.1MF
C510	1-107-826-11	s	CAPACITOR,CHIP CERAMIC 0.1MF
C514	1-107-826-11	s	CAPACITOR,CHIP CERAMIC 0.1MF
C530	1-107-826-11	s	CAPACITOR,CHIP CERAMIC 0.1MF
C537	1-107-826-11	s	CAPACITOR,CHIP CERAMIC 0.1MF
C538	1-107-826-11	s	CAPACITOR,CHIP CERAMIC 0.1MF
C543	1-107-826-11	s	CAPACITOR,CHIP CERAMIC 0.1MF
C544	1-165-811-11	s	CAPACITOR CHIP CERAMIC 22MF B
C548	1-107-826-11	s	CAPACITOR,CHIP CERAMIC 0.1MF
C549	1-165-811-11	s	CAPACITOR CHIP CERAMIC 22MF B
C600	1-107-826-11	s	CAPACITOR,CHIP CERAMIC 0.1MF
C601	1-165-811-11	s	CAPACITOR CHIP CERAMIC 22MF B
C602	1-107-826-11	s	CAPACITOR,CHIP CERAMIC 0.1MF
C603	1-107-826-11	s	CAPACITOR,CHIP CERAMIC 0.1MF
C604	1-165-811-11	s	CAPACITOR CHIP CERAMIC 22MF B

(EPR-1BA BOARD [SUFFIX 17-] for MSW PLAYER)

Ref. No. or Q'ty	Part No.	SP	Description
C605	1-107-826-11	s	CAPACITOR,CHIP CERAMIC 0.1MF
C606	1-107-826-11	s	CAPACITOR,CHIP CERAMIC 0.1MF
C607	1-107-826-11	s	CAPACITOR,CHIP CERAMIC 0.1MF
C608	1-107-826-11	s	CAPACITOR,CHIP CERAMIC 0.1MF
C609	1-107-826-11	s	CAPACITOR,CHIP CERAMIC 0.1MF
C610	1-107-826-11	s	CAPACITOR,CHIP CERAMIC 0.1MF
C611	1-107-826-11	s	CAPACITOR,CHIP CERAMIC 0.1MF
C612	1-162-915-11	s	CAPACITOR,CERAMIC 10PF/50V CH
C613	1-107-826-11	s	CAPACITOR,CHIP CERAMIC 0.1MF
C614	1-107-826-11	s	CAPACITOR,CHIP CERAMIC 0.1MF
C615	1-107-826-11	s	CAPACITOR,CHIP CERAMIC 0.1MF
C616	1-107-826-11	s	CAPACITOR,CHIP CERAMIC 0.1MF
C617	1-107-826-11	s	CAPACITOR,CHIP CERAMIC 0.1MF
C618	1-165-811-11	s	CAPACITOR CHIP CERAMIC 22MF B
C619	1-107-826-11	s	CAPACITOR,CHIP CERAMIC 0.1MF
C620	1-107-826-11	s	CAPACITOR,CHIP CERAMIC 0.1MF
C622	1-107-826-11	s	CAPACITOR,CHIP CERAMIC 0.1MF
C623	1-107-826-11	s	CAPACITOR,CHIP CERAMIC 0.1MF
C624	1-162-911-11	s	CAPACITOR,CERAMIC 6PF/50V 1608
C625	1-107-826-11	s	CAPACITOR,CHIP CERAMIC 0.1MF
C626	1-107-826-11	s	CAPACITOR,CHIP CERAMIC 0.1MF
C627	1-107-826-11	s	CAPACITOR,CHIP CERAMIC 0.1MF
C628	1-107-826-11	s	CAPACITOR,CHIP CERAMIC 0.1MF
C629	1-107-826-11	s	CAPACITOR,CHIP CERAMIC 0.1MF
C630	1-107-826-11	s	CAPACITOR,CHIP CERAMIC 0.1MF
C631	1-107-826-11	s	CAPACITOR,CHIP CERAMIC 0.1MF
C632	1-107-826-11	s	CAPACITOR,CHIP CERAMIC 0.1MF
C633	1-107-826-11	s	CAPACITOR,CHIP CERAMIC 0.1MF
C634	1-107-826-11	s	CAPACITOR,CHIP CERAMIC 0.1MF
C635	1-127-692-91	s	CAP, CHIP CERAMIC 10MF B 3216
C636	1-107-826-11	s	CAPACITOR,CHIP CERAMIC 0.1MF
C637	1-107-826-11	s	CAPACITOR,CHIP CERAMIC 0.1MF
C638	1-162-907-11	s	CAPACITOR,CERAMIC 2PF/50V(CK)
C639	1-162-907-11	s	CAPACITOR,CERAMIC 2PF/50V(CK)
C640	1-107-826-11	s	CAPACITOR,CHIP CERAMIC 0.1MF
C642	1-164-230-11	s	CAPACITOR,CERAMIC 220PF/50V
C644	1-127-861-11	s	CAP, CERAMIC 2.2MF B (3216)
C646	1-107-826-11	s	CAPACITOR,CHIP CERAMIC 0.1MF
C648	1-107-826-11	s	CAPACITOR,CHIP CERAMIC 0.1MF
C649	1-165-811-11	s	CAPACITOR CHIP CERAMIC 22MF B
C650	1-165-811-11	s	CAPACITOR CHIP CERAMIC 22MF B
C651	1-165-811-11	s	CAPACITOR CHIP CERAMIC 22MF B
C701	1-107-826-11	s	CAPACITOR,CHIP CERAMIC 0.1MF
C702	1-127-692-91	s	CAP, CHIP CERAMIC 10MF B 3216
C703	1-107-826-11	s	CAPACITOR,CHIP CERAMIC 0.1MF
C704	1-107-826-11	s	CAPACITOR,CHIP CERAMIC 0.1MF
C705	1-107-826-11	s	CAPACITOR,CHIP CERAMIC 0.1MF
C706	1-107-826-11	s	CAPACITOR,CHIP CERAMIC 0.1MF
C707	1-107-826-11	s	CAPACITOR,CHIP CERAMIC 0.1MF
C711	1-107-826-11	s	CAPACITOR,CHIP CERAMIC 0.1MF
C712	1-107-826-11	s	CAPACITOR,CHIP CERAMIC 0.1MF
C715	1-107-826-11	s	CAPACITOR,CHIP CERAMIC 0.1MF
C717	1-107-826-11	s	CAPACITOR,CHIP CERAMIC 0.1MF
C718	1-127-692-91	s	CAP, CHIP CERAMIC 10MF B 3216
C719	1-107-826-11	s	CAPACITOR,CHIP CERAMIC 0.1MF
C720	1-107-826-11	s	CAPACITOR,CHIP CERAMIC 0.1MF
C721	1-127-692-91	s	CAP, CHIP CERAMIC 10MF B 3216
C801	1-107-826-11	s	CAPACITOR,CHIP CERAMIC 0.1MF
C802	1-107-826-11	s	CAPACITOR,CHIP CERAMIC 0.1MF

(EPR-1BA BOARD [SUFFIX 17-] for MSW PLAYER)

Ref. No. or Q'ty	Part No.	SP	Description
C803	1-107-826-11	s	CAPACITOR,CHIP CERAMIC 0.1MF
C805	1-107-826-11	s	CAPACITOR,CHIP CERAMIC 0.1MF
C806	1-107-826-11	s	CAPACITOR,CHIP CERAMIC 0.1MF
C808	1-107-826-11	s	CAPACITOR,CHIP CERAMIC 0.1MF
C810	1-107-826-11	s	CAPACITOR,CHIP CERAMIC 0.1MF
C811	1-127-692-91	s	CAP, CHIP CERAMIC 10MF B 3216
C812	1-127-692-91	s	CAP, CHIP CERAMIC 10MF B 3216
C901	1-127-692-91	s	CAP, CHIP CERAMIC 10MF B 3216
C902	1-127-692-91	s	CAP, CHIP CERAMIC 10MF B 3216
C903	1-107-826-11	s	CAPACITOR,CHIP CERAMIC 0.1MF
C904	1-107-826-11	s	CAPACITOR,CHIP CERAMIC 0.1MF
C905	1-107-826-11	s	CAPACITOR,CHIP CERAMIC 0.1MF
C906	1-107-826-11	s	CAPACITOR,CHIP CERAMIC 0.1MF
C907	1-107-826-11	s	CAPACITOR,CHIP CERAMIC 0.1MF
C908	1-107-826-11	s	CAPACITOR,CHIP CERAMIC 0.1MF
C909	1-107-826-11	s	CAPACITOR,CHIP CERAMIC 0.1MF
C910	1-107-826-11	s	CAPACITOR,CHIP CERAMIC 0.1MF
C911	1-107-826-11	s	CAPACITOR,CHIP CERAMIC 0.1MF
C912	1-107-826-11	s	CAPACITOR,CHIP CERAMIC 0.1MF
C913	1-107-826-11	s	CAPACITOR,CHIP CERAMIC 0.1MF
C914	1-107-826-11	s	CAPACITOR,CHIP CERAMIC 0.1MF
C915	1-107-826-11	s	CAPACITOR,CHIP CERAMIC 0.1MF
C916	1-107-826-11	s	CAPACITOR,CHIP CERAMIC 0.1MF
CN1	1-580-789-91	s	PIN, CONNECTOR 6P
CN600	1-764-243-11	o	CONNECTOR (COAXIAL)
CN601	1-764-243-11	o	CONNECTOR (COAXIAL)
D600	8-719-820-41	s	DIODE 1SS302
D602	8-719-820-41	s	DIODE 1SS302
E101	1-535-877-22	s	CHIP,CHECKER (TEST POINT)
E300	1-535-877-22	s	CHIP,CHECKER (TEST POINT)
E301	1-535-877-22	s	CHIP,CHECKER (TEST POINT)
E500	1-535-877-22	s	CHIP,CHECKER (TEST POINT)
E600	1-535-877-22	s	CHIP,CHECKER (TEST POINT)
E1101	1-535-877-22	s	CHIP,CHECKER (TEST POINT)
E1201	1-535-877-22	s	CHIP,CHECKER (TEST POINT)
F1	⚠ 1-576-270-11	s	FUSE CHIP 4A/125V (6125)
F2	⚠ 1-576-270-11	s	FUSE CHIP 4A/125V (6125)
F3	⚠ 1-576-270-11	s	FUSE CHIP 4A/125V (6125)
FB507	1-414-864-11	s	INDUCTOR, MICRO (CHIP TYPE)
FB600	1-414-864-11	s	INDUCTOR, MICRO (CHIP TYPE)
FB601	1-414-864-11	s	INDUCTOR, MICRO (CHIP TYPE)
FB602	1-414-864-11	s	INDUCTOR, MICRO (CHIP TYPE)
FB603	1-414-864-11	s	INDUCTOR, MICRO (CHIP TYPE)
IC1	8-759-523-81	s	IC TC74VHC08FT(EL)
IC100	8-759-392-77	s	IC SN74LVC245APW (E20)
IC101	8-759-549-15	s	IC SN74LV245APWR
IC102	8-759-549-15	s	IC SN74LV245APWR
IC103	8-759-392-77	s	IC SN74LVC245APW (E20)
IC104	8-759-524-07	s	IC TC74VHC138FT(EL)
IC106	8-759-549-15	s	IC SN74LV245APWR
IC107	8-759-549-15	s	IC SN74LV245APWR
IC108	8-759-523-81	s	IC TC74VHC08FT(EL)
IC109	8-759-524-07	s	IC TC74VHC138FT(EL)
IC111	8-752-392-03	s	IC CXD1095BR
IC112	8-759-523-81	s	IC TC74VHC08FT(EL)
IC113	8-759-523-94	s	IC TC74VHC32FT(EL)
IC114	8-759-497-44	s	IC TC7WH125FU(TE12R)

(EPR-1BA BOARD [SUFFIX 17-] for MSW PLAYER)

Ref. No. or Q'ty	Part No.	SP	Description
IC115	8-759-549-15	s	IC SN74LV245APWR
IC116	6-706-487-01	s	IC TC7SH08FU(T5RSOYJF)
IC200	8-759-696-35	s	IC TPS7101QDR
IC300	8-759-656-31	o	IC CXD9094AR
IC401	6-704-838-01	s	IC MT48LC2M32B2P
IC500	8-759-490-41	s	IC TC74VHCT541AFT(EL)
IC501	8-759-672-76	s	IC AK9813BF-E2
IC502	8-759-497-44	s	IC TC7WH125FU(TE12R)
IC506	8-759-460-72	s	IC BA033FP
IC507	8-759-337-40	s	IC NJM2904V(TE2)
IC508	8-759-533-85	s	IC L88M05T-FA-TL
IC600	8-752-078-32	s	IC CXB1341R
IC602	8-759-523-95	s	IC TC74VHC74FT(EL)
IC604	8-759-491-46	s	IC TC74VHCT04AFT (EL)
IC605	8-759-523-96	s	IC TC74VHC86FT (EL)
IC701	8-759-392-77	s	IC SN74LVC245APW (E20)
IC702	8-759-524-52	s	IC TC74VHC574FT(EL)
IC703	8-759-524-52	s	IC TC74VHC574FT(EL)
IC704	8-759-524-52	s	IC TC74VHC574FT(EL)
IC705	8-759-392-77	s	IC SN74LVC245APW (E20)
IC706	8-759-549-15	s	IC SN74LV245APWR
IC707	8-759-549-15	s	IC SN74LV245APWR
IC708	8-759-524-27	s	IC TC74VHC244FT(EL)
IC710	8-759-524-29	s	IC TC74VHC257FT(EL)
IC711	8-759-524-10	s	IC TC74VHC157FT (EL)
IC714	8-759-549-15	s	IC SN74LV245APWR
IC717	8-759-392-77	s	IC SN74LVC245APW (E20)
IC813	8-759-712-31	s	IC SN65LVDT388DBTR
IC814	8-759-712-31	s	IC SN65LVDT388DBTR
IC816	8-759-712-31	s	IC SN65LVDT388DBTR
IC817	8-759-712-32	s	IC SN65LVDS389DBTR
IC818	8-759-712-32	s	IC SN65LVDS389DBTR
IC819	8-759-712-32	s	IC SN65LVDS389DBTR
IC820	8-759-524-10	s	IC TC74VHC157FT (EL)
IC902	8-759-524-27	s	IC TC74VHC244FT(EL)
L100	1-412-923-21	s	INDUCTOR CHIP 0.047UH (2520)
L101	1-412-923-21	s	INDUCTOR CHIP 0.047UH (2520)
L700	1-412-923-21	s	INDUCTOR CHIP 0.047UH (2520)
L701	1-412-923-21	s	INDUCTOR CHIP 0.047UH (2520)
L702	1-412-923-21	s	INDUCTOR CHIP 0.047UH (2520)
L800	1-412-923-21	s	INDUCTOR CHIP 0.047UH (2520)
L801	1-412-923-21	s	INDUCTOR CHIP 0.047UH (2520)
Q1	8-729-928-81	s	TRANSISTOR DTC144EE
Q51	8-729-928-19	s	TRANSISTOR 2SA1774R
Q52	8-729-047-32	s	TRANSISTOR SI4425DY-T1
Q61	8-729-928-19	s	TRANSISTOR 2SA1774R
Q62	8-729-047-32	s	TRANSISTOR SI4425DY-T1
Q600	8-729-043-92	s	TRANSISTOR 2SC5084-0(TE85L)
Q601	8-729-043-92	s	TRANSISTOR 2SC5084-0(TE85L)
Q603	8-729-928-19	s	TRANSISTOR 2SA1774R
Q604	8-729-043-92	s	TRANSISTOR 2SC5084-0(TE85L)
Q605	8-729-043-92	s	TRANSISTOR 2SC5084-0(TE85L)
Q606	8-729-043-92	s	TRANSISTOR 2SC5084-0(TE85L)
R51	1-218-847-11	s	RESISTOR, CHIP 1K 1/10W (1608)
R52	1-218-847-11	s	RESISTOR, CHIP 1K 1/10W (1608)
R53	1-218-835-11	s	RESISTOR,CHIP 330 1/10W (1608)
R54	1-218-835-11	s	RESISTOR,CHIP 330 1/10W (1608)
R61	1-218-847-11	s	RESISTOR, CHIP 1K 1/10W (1608)

(EPR-1BA BOARD [SUFFIX 17-] for MSW PLAYER)

Ref. No. or Q'ty	Part No.	SP	Description
R62	1-218-847-11	s	RESISTOR, CHIP 1K 1/10W (1608)
R63	1-218-835-11	s	RESISTOR,CHIP 330 1/10W (1608)
R64	1-218-835-11	s	RESISTOR,CHIP 330 1/10W (1608)
R100	1-218-895-11	s	RESISTOR,CHIP 100K 1/10W(1608)
R101	1-218-895-11	s	RESISTOR,CHIP 100K 1/10W(1608)
R102	1-218-863-11	s	RESISTOR,CHIP 4.7K 1/10W(1608)
R104	1-216-864-11	s	CONDUCTOR, CHIP (1608)
R106	1-218-895-11	s	RESISTOR,CHIP 100K 1/10W(1608)
R107	1-211-977-11	s	RESISTOR,CHIP 22 1/10W (1608)
R108	1-216-864-11	s	CONDUCTOR, CHIP (1608)
R109	1-211-977-11	s	RESISTOR,CHIP 22 1/10W (1608)
R110	1-211-977-11	s	RESISTOR,CHIP 22 1/10W (1608)
R119	1-216-864-11	s	CONDUCTOR, CHIP (1608)
R120	1-216-864-11	s	CONDUCTOR, CHIP (1608)
R121	1-216-864-11	s	CONDUCTOR, CHIP (1608)
R122	1-216-864-11	s	CONDUCTOR, CHIP (1608)
R125	1-216-864-11	s	CONDUCTOR, CHIP (1608)
R126	1-216-864-11	s	CONDUCTOR, CHIP (1608)
R128	1-218-895-11	s	RESISTOR,CHIP 100K 1/10W(1608)
R200	1-218-903-11	s	RESISTOR,CHIP 220K 1/10W(1608)
R201	1-218-835-11	s	RESISTOR,CHIP 330 1/10W (1608)
R202	1-218-881-11	s	RESISTOR, CHIP 27K 1/10W(1608)
R203	1-218-895-11	s	RESISTOR,CHIP 100K 1/10W(1608)
R204	1-218-871-11	s	RESISTOR,CHIP 10K 1/10W (1608)
R205	1-216-864-11	s	CONDUCTOR, CHIP (1608)
R206	1-211-985-11	s	RESISTOR,CHIP 47 1/10W (1608)
R207	1-211-985-11	s	RESISTOR,CHIP 47 1/10W (1608)
R208	1-218-823-11	s	RESISTOR,CHIP 100 1/10W (1608)
R209	1-216-864-11	s	CONDUCTOR, CHIP (1608)
R210	1-216-864-11	s	CONDUCTOR, CHIP (1608)
R211	1-216-864-11	s	CONDUCTOR, CHIP (1608)
R212	1-216-864-11	s	CONDUCTOR, CHIP (1608)
R213	1-216-864-11	s	CONDUCTOR, CHIP (1608)
R214	1-216-864-11	s	CONDUCTOR, CHIP (1608)
R215	1-216-864-11	s	CONDUCTOR, CHIP (1608)
R216	1-211-980-11	s	RESISTOR,CHIP 30 1/10W(1608)
R217	1-218-446-11	s	RESISTOR,CHIP 1 (1608)
R218	1-218-446-11	s	RESISTOR,CHIP 1 (1608)
R219	1-218-446-11	s	RESISTOR,CHIP 1 (1608)
R220	1-211-985-11	s	RESISTOR,CHIP 47 1/10W (1608)
R221	1-218-847-11	s	RESISTOR, CHIP 1K 1/10W (1608)
R222	1-218-847-11	s	RESISTOR, CHIP 1K 1/10W (1608)
R300	1-216-864-11	s	CONDUCTOR, CHIP (1608)
R301	1-216-864-11	s	CONDUCTOR, CHIP (1608)
R302	1-218-823-11	s	RESISTOR,CHIP 100 1/10W (1608)
R303	1-218-823-11	s	RESISTOR,CHIP 100 1/10W (1608)
R305	1-216-864-11	s	CONDUCTOR, CHIP (1608)
R306	1-216-864-11	s	CONDUCTOR, CHIP (1608)
R307	1-218-871-11	s	RESISTOR,CHIP 10K 1/10W (1608)
R308	1-216-864-11	s	CONDUCTOR, CHIP (1608)
R309	1-211-985-11	s	RESISTOR,CHIP 47 1/10W (1608)
R310	1-211-985-11	s	RESISTOR,CHIP 47 1/10W (1608)
R311	1-211-985-11	s	RESISTOR,CHIP 47 1/10W (1608)
R312	1-211-985-11	s	RESISTOR,CHIP 47 1/10W (1608)
R331	1-218-823-11	s	RESISTOR,CHIP 100 1/10W (1608)
R374	1-216-864-11	s	CONDUCTOR, CHIP (1608)
R400	1-218-823-11	s	RESISTOR,CHIP 100 1/10W (1608)
R401	1-218-823-11	s	RESISTOR,CHIP 100 1/10W (1608)
R402	1-218-823-11	s	RESISTOR,CHIP 100 1/10W (1608)

(EPR-1BA BOARD [SUFFIX 17-] for MSW PLAYER)

Ref. No. or Q'ty	Part No.	SP	Description
R409	1-218-847-11	s	RESISTOR, CHIP 1K 1/10W (1608)
R500	1-218-895-11	s	RESISTOR,CHIP 100K 1/10W(1608)
R501	1-218-895-11	s	RESISTOR,CHIP 100K 1/10W(1608)
R502	1-218-895-11	s	RESISTOR,CHIP 100K 1/10W(1608)
R505	1-218-895-11	s	RESISTOR,CHIP 100K 1/10W(1608)
R517	1-216-864-11	s	CONDUCTOR, CHIP (1608)
R518	1-216-864-11	s	CONDUCTOR, CHIP (1608)
R551	1-218-446-11	s	RESISTOR,CHIP 1 (1608)
R552	1-218-446-11	s	RESISTOR,CHIP 1 (1608)
R553	1-218-446-11	s	RESISTOR,CHIP 1 (1608)
R554	1-218-446-11	s	RESISTOR,CHIP 1 (1608)
R555	1-218-446-11	s	RESISTOR,CHIP 1 (1608)
R556	1-218-446-11	s	RESISTOR,CHIP 1 (1608)
R557	1-216-864-11	s	CONDUCTOR, CHIP (1608)
R600	1-218-823-11	s	RESISTOR,CHIP 100 1/10W (1608)
R601	1-218-823-11	s	RESISTOR,CHIP 100 1/10W (1608)
R602	1-216-864-11	s	CONDUCTOR, CHIP (1608)
R603	1-218-875-11	s	RESISTOR,CHIP 15K 1/10W (1608)
R604	1-218-875-11	s	RESISTOR,CHIP 15K 1/10W (1608)
R606	1-218-873-11	s	RESISTOR,CHIP 12K 1/10W (1608)
R608	1-218-851-11	s	RESISTOR,CHIP 1.5K 1/10W(1608)
R609	1-218-839-11	s	RESISTOR,CHIP 470 1/10W (1608)
R610	1-218-866-11	s	RESISTOR,CHIP 6.2K 1/10W(1608)
R611	1-218-847-11	s	RESISTOR, CHIP 1K 1/10W (1608)
R612	1-218-856-11	s	RESISTOR,CHIP 2.4K 1/10W(1608)
R613	1-218-865-11	s	RESISTOR,CHIP 5.6K 1/10W(1608)
R614	1-218-833-11	s	RESISTOR,CHIP 270 1/10W (1608)
R617	1-218-833-11	s	RESISTOR,CHIP 270 1/10W (1608)
R618	1-218-833-11	s	RESISTOR,CHIP 270 1/10W (1608)
R619	1-211-985-11	s	RESISTOR,CHIP 47 1/10W (1608)
R620	1-218-839-11	s	RESISTOR,CHIP 470 1/10W (1608)
R621	1-211-977-11	s	RESISTOR,CHIP 22 1/10W (1608)
R623	1-211-989-11	s	RESISTOR,CHIP 68 1/10W (1608)
R624	1-211-978-11	s	RESISTOR,CHIP 24 1/10W (1608)
R625	1-211-984-11	s	RESISTOR,CHIP 43 1/10W (1608)
R626	1-218-829-11	s	RESISTOR,CHIP 180 1/10W (1608)
R627	1-211-985-11	s	RESISTOR,CHIP 47 1/10W (1608)
R628	1-218-881-11	s	RESISTOR, CHIP 27K 1/10W(1608)
R629	1-218-871-11	s	RESISTOR,CHIP 10K 1/10W (1608)
R630	1-211-989-11	s	RESISTOR,CHIP 68 1/10W (1608)
R631	1-211-978-11	s	RESISTOR,CHIP 24 1/10W (1608)
R632	1-218-865-11	s	RESISTOR,CHIP 5.6K 1/10W(1608)
R633	1-218-867-11	s	RESISTOR,CHIP 6.8K 1/10W(1608)
R634	1-211-985-11	s	RESISTOR,CHIP 47 1/10W (1608)
R635	1-211-985-11	s	RESISTOR,CHIP 47 1/10W (1608)
R637	1-211-985-11	s	RESISTOR,CHIP 47 1/10W (1608)
R638	1-218-855-11	s	RESISTOR,CHIP 2.2K 1/10W(1608)
R639	1-211-985-11	s	RESISTOR,CHIP 47 1/10W (1608)
R640	1-218-827-11	s	RESISTOR,CHIP 150 1/10W (1608)
R641	1-211-985-11	s	RESISTOR,CHIP 47 1/10W (1608)
R643	1-218-827-11	s	RESISTOR,CHIP 150 1/10W (1608)
R644	1-218-855-11	s	RESISTOR,CHIP 2.2K 1/10W(1608)
R645	1-218-847-11	s	RESISTOR, CHIP 1K 1/10W (1608)
R646	1-218-855-11	s	RESISTOR,CHIP 2.2K 1/10W(1608)
R647	1-211-989-11	s	RESISTOR,CHIP 68 1/10W (1608)
R648	1-211-989-11	s	RESISTOR,CHIP 68 1/10W (1608)
R649	1-218-847-11	s	RESISTOR, CHIP 1K 1/10W (1608)
R650	1-218-877-11	s	RESISTOR,CHIP 18K 1/10W (1608)
R651	1-216-864-11	s	CONDUCTOR, CHIP (1608)

(EPR-1BA BOARD [SUFFIX 17-] for MSW PLAYER)

Ref. No. or Q'ty	Part No.	SP	Description
R652	1-218-895-11	s	RESISTOR,CHIP 100K 1/10W(1608)
R653	1-216-864-11	s	CONDUCTOR, CHIP (1608)
R700	1-216-864-11	s	CONDUCTOR, CHIP (1608)
R705	1-218-831-11	s	RESISTOR, CHIP 220 1/10W(1608)
R708	1-211-985-11	s	RESISTOR,CHIP 47 1/10W (1608)
R709	1-211-985-11	s	RESISTOR,CHIP 47 1/10W (1608)
R715	1-211-985-11	s	RESISTOR,CHIP 47 1/10W (1608)
R716	1-211-985-11	s	RESISTOR,CHIP 47 1/10W (1608)
R717	1-211-985-11	s	RESISTOR,CHIP 47 1/10W (1608)
R718	1-211-985-11	s	RESISTOR,CHIP 47 1/10W (1608)
R720	1-211-985-11	s	RESISTOR,CHIP 47 1/10W (1608)
R721	1-211-985-11	s	RESISTOR,CHIP 47 1/10W (1608)
R722	1-211-985-11	s	RESISTOR,CHIP 47 1/10W (1608)
R723	1-216-864-11	s	CONDUCTOR, CHIP (1608)
R729	1-211-977-11	s	RESISTOR,CHIP 22 1/10W (1608)
R731	1-211-977-11	s	RESISTOR,CHIP 22 1/10W (1608)
R732	1-211-977-11	s	RESISTOR,CHIP 22 1/10W (1608)
R733	1-211-977-11	s	RESISTOR,CHIP 22 1/10W (1608)
R736	1-211-985-11	s	RESISTOR,CHIP 47 1/10W (1608)
R737	1-211-977-11	s	RESISTOR,CHIP 22 1/10W (1608)
R760	1-211-969-11	s	RESISTOR,CHIP 10 1/10W (1608)
R761	1-211-969-11	s	RESISTOR,CHIP 10 1/10W (1608)
R762	1-218-823-11	s	RESISTOR,CHIP 100 1/10W (1608)
R763	1-211-969-11	s	RESISTOR,CHIP 10 1/10W (1608)
R764	1-211-969-11	s	RESISTOR,CHIP 10 1/10W (1608)
R765	1-211-969-11	s	RESISTOR,CHIP 10 1/10W (1608)
R766	1-218-823-11	s	RESISTOR,CHIP 100 1/10W (1608)
R767	1-218-823-11	s	RESISTOR,CHIP 100 1/10W (1608)
R768	1-218-823-11	s	RESISTOR,CHIP 100 1/10W (1608)
R769	1-218-823-11	s	RESISTOR,CHIP 100 1/10W (1608)
R770	1-216-864-11	s	CONDUCTOR, CHIP (1608)
R771	1-216-864-11	s	CONDUCTOR, CHIP (1608)
R772	1-216-864-11	s	CONDUCTOR, CHIP (1608)
R780	1-218-823-11	s	RESISTOR,CHIP 100 1/10W (1608)
R781	1-218-823-11	s	RESISTOR,CHIP 100 1/10W (1608)
R782	1-218-823-11	s	RESISTOR,CHIP 100 1/10W (1608)
R783	1-216-864-11	s	CONDUCTOR, CHIP (1608)
R800	1-218-895-11	s	RESISTOR,CHIP 100K 1/10W(1608)
R801	1-218-895-11	s	RESISTOR,CHIP 100K 1/10W(1608)
R802	1-218-823-11	s	RESISTOR,CHIP 100 1/10W (1608)
R803	1-218-823-11	s	RESISTOR,CHIP 100 1/10W (1608)
R804	1-218-823-11	s	RESISTOR,CHIP 100 1/10W (1608)
R805	1-218-823-11	s	RESISTOR,CHIP 100 1/10W (1608)
R827	1-211-985-11	s	RESISTOR,CHIP 47 1/10W (1608)
R834	1-216-864-11	s	CONDUCTOR, CHIP (1608)
R835	1-216-864-11	s	CONDUCTOR, CHIP (1608)
R836	1-216-864-11	s	CONDUCTOR, CHIP (1608)
R837	1-216-864-11	s	CONDUCTOR, CHIP (1608)
R838	1-216-864-11	s	CONDUCTOR, CHIP (1608)
R841	1-218-823-11	s	RESISTOR,CHIP 100 1/10W (1608)
R842	1-218-823-11	s	RESISTOR,CHIP 100 1/10W (1608)
R901	1-211-969-11	s	RESISTOR,CHIP 10 1/10W (1608)
R904	1-216-864-11	s	CONDUCTOR, CHIP (1608)
R905	1-218-823-11	s	RESISTOR,CHIP 100 1/10W (1608)
R906	1-218-823-11	s	RESISTOR,CHIP 100 1/10W (1608)
R907	1-218-823-11	s	RESISTOR,CHIP 100 1/10W (1608)
R908	1-216-864-11	s	CONDUCTOR, CHIP (1608)
R909	1-216-864-11	s	CONDUCTOR, CHIP (1608)
R910	1-216-864-11	s	CONDUCTOR, CHIP (1608)

(EPR-1BA BOARD [SUFFIX 17-] for MSW PLAYER)

Ref. No. or Q'ty	Part No.	SP	Description
R911	1-216-864-11	s	CONDUCTOR, CHIP (1608)
R912	1-216-864-11	s	CONDUCTOR, CHIP (1608)
R913	1-216-864-11	s	CONDUCTOR, CHIP (1608)
R914	1-216-864-11	s	CONDUCTOR, CHIP (1608)
R915	1-216-864-11	s	CONDUCTOR, CHIP (1608)
R917	1-216-864-11	s	CONDUCTOR, CHIP (1608)
R918	1-216-864-11	s	CONDUCTOR, CHIP (1608)
R919	1-216-864-11	s	CONDUCTOR, CHIP (1608)
R920	1-218-835-11	s	RESISTOR,CHIP 330 1/10W (1608)
R921	1-218-863-11	s	RESISTOR,CHIP 4.7K 1/10W(1608)
R922	1-211-969-11	s	RESISTOR,CHIP 10 1/10W (1608)
R924	1-216-864-11	s	CONDUCTOR, CHIP (1608)
R926	1-216-864-11	s	CONDUCTOR, CHIP (1608)
R927	1-216-864-11	s	CONDUCTOR, CHIP (1608)
R1133	1-216-864-11	s	CONDUCTOR, CHIP (1608)
RB100	1-234-397-11	s	NETWORK, RES (8 GANG) 100K
RB101	1-234-397-11	s	NETWORK, RES (8 GANG) 100K
RB102	1-234-397-11	s	NETWORK, RES (8 GANG) 100K
RB103	1-234-397-11	s	NETWORK, RES (8 GANG) 100K
RB104	1-233-576-11	s	RESISTOR,CHIP NETWORK 100
RB105	1-233-576-11	s	RESISTOR,CHIP NETWORK 100
RB106	1-233-810-21	s	RES, NETWORK 100K (3216)
RB107	1-239-409-11	s	RESISTOR NETWORK 47 (3216)
RB108	1-234-397-11	s	NETWORK, RES (8 GANG) 100K
RB109	1-234-397-11	s	NETWORK, RES (8 GANG) 100K
RB110	1-234-397-11	s	NETWORK, RES (8 GANG) 100K
RB111	1-234-397-11	s	NETWORK, RES (8 GANG) 100K
RB112	1-234-397-11	s	NETWORK, RES (8 GANG) 100K
RB113	1-233-575-11	s	RES, CHIP NETWORK 22
RB114	1-233-575-11	s	RES, CHIP NETWORK 22
RB115	1-233-575-11	s	RES, CHIP NETWORK 22
RB116	1-233-575-11	s	RES, CHIP NETWORK 22
RB117	1-233-575-11	s	RES, CHIP NETWORK 22
RB118	1-233-575-11	s	RES, CHIP NETWORK 22
RB119	1-239-409-11	s	RESISTOR NETWORK 47 (3216)
RB120	1-239-409-11	s	RESISTOR NETWORK 47 (3216)
RB121	1-233-810-21	s	RES, NETWORK 100K (3216)
RB122	1-233-810-21	s	RES, NETWORK 100K (3216)
RB124	1-233-810-21	s	RES, NETWORK 100K (3216)
RB200	1-233-412-11	s	RESISTOR,CHIP NETWORK 1K
RB201	1-233-412-11	s	RESISTOR,CHIP NETWORK 1K
RB203	1-239-409-11	s	RESISTOR NETWORK 47 (3216)
RB204	1-239-409-11	s	RESISTOR NETWORK 47 (3216)
RB205	1-239-409-11	s	RESISTOR NETWORK 47 (3216)
RB300	1-239-409-11	s	RESISTOR NETWORK 47 (3216)
RB301	1-239-409-11	s	RESISTOR NETWORK 47 (3216)
RB302	1-239-409-11	s	RESISTOR NETWORK 47 (3216)
RB303	1-239-409-11	s	RESISTOR NETWORK 47 (3216)
RB400	1-234-523-21	s	RESISTOR,CHIP NETWORK
RB401	1-234-523-21	s	RESISTOR,CHIP NETWORK
RB402	1-234-523-21	s	RESISTOR,CHIP NETWORK
RB600	1-233-576-11	s	RESISTOR,CHIP NETWORK 100
RB601	1-233-576-11	s	RESISTOR,CHIP NETWORK 100
RB700	1-234-522-91	s	NETWORK,RESISTOR (8 GANG) 220
RB701	1-234-522-91	s	NETWORK,RESISTOR (8 GANG) 220
RB703	1-233-576-11	s	RESISTOR,CHIP NETWORK 100
RB710	1-239-409-11	s	RESISTOR NETWORK 47 (3216)
RB711	1-233-576-11	s	RESISTOR,CHIP NETWORK 100
RB712	1-233-477-11	s	NETWORK, RES (8 GANG) 1K

(EPR-1BA BOARD [SUFFIX 17-] for MSW PLAYER)

Ref. No. or Q'ty	Part No.	SP	Description
RB713	1-233-477-11	s	NETWORK, RES (8 GANG) 1K
RB714	1-233-576-11	s	RESISTOR,CHIP NETWORK 100
RB715	1-233-477-11	s	NETWORK, RES (8 GANG) 1K
RB719	1-233-576-11	s	RESISTOR,CHIP NETWORK 100
RB721	1-233-411-11	s	RESISTOR,CHIP NETWORK 220/3216
RB800	1-239-409-11	s	RESISTOR NETWORK 47 (3216)
RB801	1-239-409-11	s	RESISTOR NETWORK 47 (3216)
RB802	1-239-409-11	s	RESISTOR NETWORK 47 (3216)
RB803	1-239-409-11	s	RESISTOR NETWORK 47 (3216)
RB804	1-239-409-11	s	RESISTOR NETWORK 47 (3216)
RB805	1-233-477-11	s	NETWORK, RES (8 GANG) 1K
RB806	1-233-477-11	s	NETWORK, RES (8 GANG) 1K
RB809	1-233-412-11	s	RESISTOR,CHIP NETWORK 1K
RB810	1-239-409-11	s	RESISTOR NETWORK 47 (3216)
RB811	1-233-270-11	s	RESISTOR, NETWORK (8 GANG) 10K
RB901	1-236-908-11	s	RESISTOR,NETWORK 10K (3216)
TP200	1-535-877-22	s	CHIP,CHECKER (TEST POINT)
TP201	1-535-877-22	s	CHIP,CHECKER (TEST POINT)
TP600	1-535-877-22	s	CHIP,CHECKER (TEST POINT)
TP703	1-535-877-22	s	CHIP,CHECKER (TEST POINT)
TP704	1-535-877-22	s	CHIP,CHECKER (TEST POINT)

EPR-1C BOARD [SUFFIX 16] for DVW

[Lot No. 434 - 554] DVW-2000/P, M2000/P

Ref. No. or Q'ty	Part No.	SP	Description
1pc	A-8347-767-A	s	MOUNTED CIRCUIT BOARD, EPR-1C
1pc	3-179-084-11	s	LEVER (R), C BOARD
1pc	3-179-085-11	s	LEVER (L), C BOARD
C5	1-127-692-11	s	CAP, CHIP CERAMIC 10MF B 3216
C6	1-127-692-11	s	CAP, CHIP CERAMIC 10MF B 3216
C11	1-165-811-11	s	CAPACITOR CHIP CERAMIC 22MF B
C12	1-165-811-11	s	CAPACITOR CHIP CERAMIC 22MF B
C51	1-127-861-11	s	CAP, CERAMIC 2.2MF B (3216)
C52	1-127-861-11	s	CAP, CERAMIC 2.2MF B (3216)
C61	1-127-861-11	s	CAP, CERAMIC 2.2MF B (3216)
C62	1-127-861-11	s	CAP, CERAMIC 2.2MF B (3216)
C100	1-127-692-11	s	CAP, CHIP CERAMIC 10MF B 3216
C101	1-107-826-11	s	CAPACITOR,CHIP CERAMIC 0.1MF
C102	1-127-692-11	s	CAP, CHIP CERAMIC 10MF B 3216
C103	1-107-826-11	s	CAPACITOR,CHIP CERAMIC 0.1MF
C104	1-107-826-11	s	CAPACITOR,CHIP CERAMIC 0.1MF
C105	1-107-826-11	s	CAPACITOR,CHIP CERAMIC 0.1MF
C106	1-107-826-11	s	CAPACITOR,CHIP CERAMIC 0.1MF
C107	1-107-826-11	s	CAPACITOR,CHIP CERAMIC 0.1MF
C108	1-107-826-11	s	CAPACITOR,CHIP CERAMIC 0.1MF
C110	1-107-826-11	s	CAPACITOR,CHIP CERAMIC 0.1MF
C112	1-107-826-11	s	CAPACITOR,CHIP CERAMIC 0.1MF
C113	1-107-826-11	s	CAPACITOR,CHIP CERAMIC 0.1MF
C114	1-107-826-11	s	CAPACITOR,CHIP CERAMIC 0.1MF
C115	1-107-826-11	s	CAPACITOR,CHIP CERAMIC 0.1MF
C117	1-107-826-11	s	CAPACITOR,CHIP CERAMIC 0.1MF
C200	1-107-826-11	s	CAPACITOR,CHIP CERAMIC 0.1MF
C201	1-165-811-11	s	CAPACITOR CHIP CERAMIC 22MF B
C202	1-165-811-11	s	CAPACITOR CHIP CERAMIC 22MF B
C203	1-107-826-11	s	CAPACITOR,CHIP CERAMIC 0.1MF
C204	1-107-826-11	s	CAPACITOR,CHIP CERAMIC 0.1MF
C205	1-107-826-11	s	CAPACITOR,CHIP CERAMIC 0.1MF
C206	1-107-826-11	s	CAPACITOR,CHIP CERAMIC 0.1MF
C207	1-107-826-11	s	CAPACITOR,CHIP CERAMIC 0.1MF
C208	1-127-692-11	s	CAP, CHIP CERAMIC 10MF B 3216
C209	1-107-826-11	s	CAPACITOR,CHIP CERAMIC 0.1MF
C210	1-107-826-11	s	CAPACITOR,CHIP CERAMIC 0.1MF
C211	1-107-826-11	s	CAPACITOR,CHIP CERAMIC 0.1MF
C212	1-107-826-11	s	CAPACITOR,CHIP CERAMIC 0.1MF
C213	1-107-826-11	s	CAPACITOR,CHIP CERAMIC 0.1MF
C214	1-107-826-11	s	CAPACITOR,CHIP CERAMIC 0.1MF
C215	1-107-826-11	s	CAPACITOR,CHIP CERAMIC 0.1MF
C216	1-107-826-11	s	CAPACITOR,CHIP CERAMIC 0.1MF
C217	1-107-826-11	s	CAPACITOR,CHIP CERAMIC 0.1MF
C218	1-127-692-11	s	CAP, CHIP CERAMIC 10MF B 3216
C300	1-127-692-11	s	CAP, CHIP CERAMIC 10MF B 3216
C301	1-107-826-11	s	CAPACITOR,CHIP CERAMIC 0.1MF
C302	1-107-826-11	s	CAPACITOR,CHIP CERAMIC 0.1MF
C303	1-107-826-11	s	CAPACITOR,CHIP CERAMIC 0.1MF
C304	1-107-826-11	s	CAPACITOR,CHIP CERAMIC 0.1MF
C305	1-107-826-11	s	CAPACITOR,CHIP CERAMIC 0.1MF
C306	1-107-826-11	s	CAPACITOR,CHIP CERAMIC 0.1MF
C307	1-107-826-11	s	CAPACITOR,CHIP CERAMIC 0.1MF
C308	1-107-826-11	s	CAPACITOR,CHIP CERAMIC 0.1MF
C309	1-107-826-11	s	CAPACITOR,CHIP CERAMIC 0.1MF
C310	1-107-826-11	s	CAPACITOR,CHIP CERAMIC 0.1MF
C311	1-107-826-11	s	CAPACITOR,CHIP CERAMIC 0.1MF

(EPR-1C BOARD [SUFFIX 16] for DVW)

Ref. No. or Q'ty	Part No.	SP	Description
C312	1-107-826-11	s	CAPACITOR,CHIP CERAMIC 0.1MF
C313	1-107-826-11	s	CAPACITOR,CHIP CERAMIC 0.1MF
C314	1-107-826-11	s	CAPACITOR,CHIP CERAMIC 0.1MF
C315	1-127-692-11	s	CAP, CHIP CERAMIC 10MF B 3216
C354	1-107-826-11	s	CAPACITOR,CHIP CERAMIC 0.1MF
C701	1-107-826-11	s	CAPACITOR,CHIP CERAMIC 0.1MF
C702	1-127-692-11	s	CAP, CHIP CERAMIC 10MF B 3216
C703	1-107-826-11	s	CAPACITOR,CHIP CERAMIC 0.1MF
C704	1-107-826-11	s	CAPACITOR,CHIP CERAMIC 0.1MF
C705	1-107-826-11	s	CAPACITOR,CHIP CERAMIC 0.1MF
C706	1-107-826-11	s	CAPACITOR,CHIP CERAMIC 0.1MF
C707	1-107-826-11	s	CAPACITOR,CHIP CERAMIC 0.1MF
C710	1-107-826-11	s	CAPACITOR,CHIP CERAMIC 0.1MF
C711	1-107-826-11	s	CAPACITOR,CHIP CERAMIC 0.1MF
C712	1-107-826-11	s	CAPACITOR,CHIP CERAMIC 0.1MF
C713	1-107-826-11	s	CAPACITOR,CHIP CERAMIC 0.1MF
C715	1-107-826-11	s	CAPACITOR,CHIP CERAMIC 0.1MF
C716	1-107-826-11	s	CAPACITOR,CHIP CERAMIC 0.1MF
C717	1-107-826-11	s	CAPACITOR,CHIP CERAMIC 0.1MF
C718	1-127-692-11	s	CAP, CHIP CERAMIC 10MF B 3216
C719	1-107-826-11	s	CAPACITOR,CHIP CERAMIC 0.1MF
C720	1-107-826-11	s	CAPACITOR,CHIP CERAMIC 0.1MF
C721	1-127-692-11	s	CAP, CHIP CERAMIC 10MF B 3216
C806	1-107-826-11	s	CAPACITOR,CHIP CERAMIC 0.1MF
C808	1-107-826-11	s	CAPACITOR,CHIP CERAMIC 0.1MF
C810	1-107-826-11	s	CAPACITOR,CHIP CERAMIC 0.1MF
C812	1-127-692-11	s	CAP, CHIP CERAMIC 10MF B 3216
C901	1-127-692-11	s	CAP, CHIP CERAMIC 10MF B 3216
C902	1-127-692-11	s	CAP, CHIP CERAMIC 10MF B 3216
C903	1-107-826-11	s	CAPACITOR,CHIP CERAMIC 0.1MF
C904	1-107-826-11	s	CAPACITOR,CHIP CERAMIC 0.1MF
C905	1-107-826-11	s	CAPACITOR,CHIP CERAMIC 0.1MF
C906	1-107-826-11	s	CAPACITOR,CHIP CERAMIC 0.1MF
C907	1-107-826-11	s	CAPACITOR,CHIP CERAMIC 0.1MF
C908	1-107-826-11	s	CAPACITOR,CHIP CERAMIC 0.1MF
C909	1-107-826-11	s	CAPACITOR,CHIP CERAMIC 0.1MF
C910	1-107-826-11	s	CAPACITOR,CHIP CERAMIC 0.1MF
C911	1-107-826-11	s	CAPACITOR,CHIP CERAMIC 0.1MF
C912	1-107-826-11	s	CAPACITOR,CHIP CERAMIC 0.1MF
C913	1-107-826-11	s	CAPACITOR,CHIP CERAMIC 0.1MF
C914	1-107-826-11	s	CAPACITOR,CHIP CERAMIC 0.1MF
C915	1-107-826-11	s	CAPACITOR,CHIP CERAMIC 0.1MF
C916	1-107-826-11	s	CAPACITOR,CHIP CERAMIC 0.1MF
C1101	1-127-692-11	s	CAP, CHIP CERAMIC 10MF B 3216
C1102	1-107-826-11	s	CAPACITOR,CHIP CERAMIC 0.1MF
C1103	1-107-826-11	s	CAPACITOR,CHIP CERAMIC 0.1MF
C1104	1-127-692-11	s	CAP, CHIP CERAMIC 10MF B 3216
C1105	1-107-826-11	s	CAPACITOR,CHIP CERAMIC 0.1MF
C1106	1-107-826-11	s	CAPACITOR,CHIP CERAMIC 0.1MF
C1107	1-107-826-11	s	CAPACITOR,CHIP CERAMIC 0.1MF
C1108	1-107-826-11	s	CAPACITOR,CHIP CERAMIC 0.1MF
C1109	1-107-826-11	s	CAPACITOR,CHIP CERAMIC 0.1MF
C1110	1-107-826-11	s	CAPACITOR,CHIP CERAMIC 0.1MF
C1111	1-107-826-11	s	CAPACITOR,CHIP CERAMIC 0.1MF
C1112	1-107-826-11	s	CAPACITOR,CHIP CERAMIC 0.1MF
C1113	1-107-826-11	s	CAPACITOR,CHIP CERAMIC 0.1MF
C1114	1-107-826-11	s	CAPACITOR,CHIP CERAMIC 0.1MF
C1115	1-107-826-11	s	CAPACITOR,CHIP CERAMIC 0.1MF
C1116	1-107-826-11	s	CAPACITOR,CHIP CERAMIC 0.1MF

(EPR-1C BOARD [SUFFIX 16] for DVW)

Ref. No. or Q'ty	Part No.	SP	Description
C1117	1-107-826-11	s	CAPACITOR,CHIP CERAMIC 0.1MF
C1118	1-162-922-11	s	CAPACITOR,CERAMIC 39PF/50V CH
C1119	1-107-826-11	s	CAPACITOR,CHIP CERAMIC 0.1MF
C1120	1-107-826-11	s	CAPACITOR,CHIP CERAMIC 0.1MF
C1121	1-107-826-11	s	CAPACITOR,CHIP CERAMIC 0.1MF
C1122	1-107-826-11	s	CAPACITOR,CHIP CERAMIC 0.1MF
C1123	1-107-826-11	s	CAPACITOR,CHIP CERAMIC 0.1MF
C1124	1-107-826-11	s	CAPACITOR,CHIP CERAMIC 0.1MF
C1125	1-107-826-11	s	CAPACITOR,CHIP CERAMIC 0.1MF
C1126	1-107-826-11	s	CAPACITOR,CHIP CERAMIC 0.1MF
C1127	1-107-826-11	s	CAPACITOR,CHIP CERAMIC 0.1MF
C1128	1-107-826-11	s	CAPACITOR,CHIP CERAMIC 0.1MF
C1129	1-107-826-11	s	CAPACITOR,CHIP CERAMIC 0.1MF
C1130	1-107-826-11	s	CAPACITOR,CHIP CERAMIC 0.1MF
C1131	1-107-826-11	s	CAPACITOR,CHIP CERAMIC 0.1MF
C1132	1-107-826-11	s	CAPACITOR,CHIP CERAMIC 0.1MF
C1133	1-127-692-11	s	CAP, CHIP CERAMIC 10MF B 3216
C1134	1-107-826-11	s	CAPACITOR,CHIP CERAMIC 0.1MF
C1135	1-107-826-11	s	CAPACITOR,CHIP CERAMIC 0.1MF
C1136	1-107-826-11	s	CAPACITOR,CHIP CERAMIC 0.1MF
C1137	1-107-826-11	s	CAPACITOR,CHIP CERAMIC 0.1MF
C1138	1-107-826-11	s	CAPACITOR,CHIP CERAMIC 0.1MF
C1139	1-107-826-11	s	CAPACITOR,CHIP CERAMIC 0.1MF
C1140	1-107-826-11	s	CAPACITOR,CHIP CERAMIC 0.1MF
C1141	1-107-826-11	s	CAPACITOR,CHIP CERAMIC 0.1MF
C1142	1-107-826-11	s	CAPACITOR,CHIP CERAMIC 0.1MF
C1143	1-107-826-11	s	CAPACITOR,CHIP CERAMIC 0.1MF
C1144	1-107-826-11	s	CAPACITOR,CHIP CERAMIC 0.1MF
C1145	1-107-826-11	s	CAPACITOR,CHIP CERAMIC 0.1MF
C1146	1-107-826-11	s	CAPACITOR,CHIP CERAMIC 0.1MF
C1147	1-107-826-11	s	CAPACITOR,CHIP CERAMIC 0.1MF
C1148	1-107-826-11	s	CAPACITOR,CHIP CERAMIC 0.1MF
C1149	1-127-692-11	s	CAP, CHIP CERAMIC 10MF B 3216
C1150	1-127-692-11	s	CAP, CHIP CERAMIC 10MF B 3216
C1151	1-107-826-11	s	CAPACITOR,CHIP CERAMIC 0.1MF
C1152	1-107-826-11	s	CAPACITOR,CHIP CERAMIC 0.1MF
C1153	1-107-826-11	s	CAPACITOR,CHIP CERAMIC 0.1MF
C1154	1-107-826-11	s	CAPACITOR,CHIP CERAMIC 0.1MF
C1155	1-107-826-11	s	CAPACITOR,CHIP CERAMIC 0.1MF
CN1	1-580-789-91	s	PIN, CONNECTOR 6P
E101	1-535-877-22	s	CHIP,CHECKER (TEST POINT)
E300	1-535-877-22	s	CHIP,CHECKER (TEST POINT)
E301	1-535-877-22	s	CHIP,CHECKER (TEST POINT)
E500	1-535-877-22	s	CHIP,CHECKER (TEST POINT)
E600	1-535-877-22	s	CHIP,CHECKER (TEST POINT)
E1101	1-535-877-22	s	CHIP,CHECKER (TEST POINT)
E1201	1-535-877-22	s	CHIP,CHECKER (TEST POINT)
F2	⚠ 1-576-270-11	s	FUSE CHIP 4A/125V (6125)
F3	⚠ 1-576-270-11	s	FUSE CHIP 4A/125V (6125)
IC1	8-759-523-81	s	IC TC74VHC08FT(EL)
IC100	8-759-392-77	s	IC SN74LVC245APW (E20)
IC101	8-759-549-15	s	IC SN74LV245APWR
IC102	8-759-549-15	s	IC SN74LV245APWR
IC103	8-759-392-77	s	IC SN74LVC245APW (E20)
IC104	8-759-524-07	s	IC TC74VHC138FT(EL)
IC106	8-759-549-15	s	IC SN74LV245APWR
IC108	8-759-523-81	s	IC TC74VHC08FT(EL)

(EPR-1C BOARD [SUFFIX 16] for DVW)

Ref. No. or Q'ty	Part No.	SP	Description
IC109	8-759-524-07	s	IC TC74VHC138FT(EL)
IC110	8-759-524-07	s	IC TC74VHC138FT(EL)
IC111	8-752-392-03	s	IC CXD1095BR
IC113	8-759-523-94	s	IC TC74VHC32FT(EL)
IC114	8-759-497-44	s	IC TC7WH125FU(TE12R)
IC115	8-759-549-15	s	IC SN74LV245APWR
IC116	8-759-196-96	s	IC TC7SH08FU (TE85R)
IC117	8-759-549-15	s	IC SN74LV245APWR
IC200	8-759-696-35	s	IC TPS7101QDR
IC300	8-759-656-31	o	IC CXD9094AR
IC305	8-759-531-92	s	IC TC7WH04FU(TE12R)
IC701	8-759-392-77	s	IC SN74LVC245APW (E20)
IC702	8-759-524-52	s	IC TC74VHC574FT(EL)
IC703	8-759-524-52	s	IC TC74VHC574FT(EL)
IC704	8-759-524-52	s	IC TC74VHC574FT(EL)
IC705	8-759-392-77	s	IC SN74LVC245APW (E20)
IC706	8-759-549-15	s	IC SN74LV245APWR
IC707	8-759-549-15	s	IC SN74LV245APWR
IC708	8-759-524-27	s	IC TC74VHC244FT(EL)
IC709	8-759-549-15	s	IC SN74LV245APWR
IC710	8-759-524-29	s	IC TC74VHC257FT(EL)
IC711	8-759-524-10	s	IC TC74VHC157FT (EL)
IC712	8-759-524-10	s	IC TC74VHC157FT (EL)
IC714	8-759-549-15	s	IC SN74LV245APWR
IC715	8-759-549-15	s	IC SN74LV245APWR
IC717	8-759-392-77	s	IC SN74LVC245APW (E20)
IC817	8-759-712-32	s	IC SN65LVDS389DBTR
IC818	8-759-712-32	s	IC SN65LVDS389DBTR
IC819	8-759-712-32	s	IC SN65LVDS389DBTR
IC901	6-704-718-01	s	IC XC18V02VQG44C
IC902	8-759-524-27	s	IC TC74VHC244FT(EL)
IC1101	8-759-592-44	s	IC TC7SZ04FU(TE85R)
IC1102	8-759-188-02	s	IC CXD8854Q
IC1103	8-759-177-72	s	IC CXD8806R
IC1104	6-704-713-01	s	IC XC2S50-5TQG144C
IC1108	6-705-168-01	s	IC CY7C1019CV33-12ZCT
IC1109	6-705-168-01	s	IC CY7C1019CV33-12ZCT
IC1110	6-705-168-01	s	IC CY7C1019CV33-12ZCT
IC1111	6-705-168-01	s	IC CY7C1019CV33-12ZCT
L100	1-412-923-21	s	INDUCTOR CHIP 0.047UH (2520)
L101	1-412-923-21	s	INDUCTOR CHIP 0.047UH (2520)
L700	1-412-923-21	s	INDUCTOR CHIP 0.047UH (2520)
L701	1-412-923-21	s	INDUCTOR CHIP 0.047UH (2520)
L702	1-412-923-21	s	INDUCTOR CHIP 0.047UH (2520)
L801	1-412-923-21	s	INDUCTOR CHIP 0.047UH (2520)
L1101	1-412-923-21	s	INDUCTOR CHIP 0.047UH (2520)
Q1	8-729-928-81	s	TRANSISTOR DTC144EE
Q51	8-729-928-19	s	TRANSISTOR 2SA1774R
Q52	8-729-047-32	s	TRANSISTOR SI4425DY-T1
Q61	8-729-928-19	s	TRANSISTOR 2SA1774R
Q62	8-729-047-32	s	TRANSISTOR SI4425DY-T1
R51	1-218-847-11	s	RESISTOR, CHIP 1K 1/10W (1608)
R52	1-218-847-11	s	RESISTOR, CHIP 1K 1/10W (1608)
R53	1-218-835-11	s	RESISTOR,CHIP 330 1/10W (1608)
R54	1-218-835-11	s	RESISTOR,CHIP 330 1/10W (1608)
R61	1-218-847-11	s	RESISTOR, CHIP 1K 1/10W (1608)
R62	1-218-847-11	s	RESISTOR, CHIP 1K 1/10W (1608)
R63	1-218-835-11	s	RESISTOR,CHIP 330 1/10W (1608)

(EPR-1C BOARD [SUFFIX 16] for DVW)

Ref. No. or Q'ty	Part No.	SP	Description
R64	1-218-835-11	s	RESISTOR,CHIP 330 1/10W (1608)
R100	1-218-895-11	s	RESISTOR,CHIP 100K 1/10W(1608)
R101	1-218-895-11	s	RESISTOR,CHIP 100K 1/10W(1608)
R102	1-218-863-11	s	RESISTOR,CHIP 4.7K 1/10W(1608)
R104	1-216-864-11	s	CONDUCTOR, CHIP (1608)
R106	1-218-895-11	s	RESISTOR,CHIP 100K 1/10W(1608)
R107	1-211-977-11	s	RESISTOR,CHIP 22 1/10W (1608)
R109	1-211-977-11	s	RESISTOR,CHIP 22 1/10W (1608)
R110	1-211-977-11	s	RESISTOR,CHIP 22 1/10W (1608)
R120	1-216-864-11	s	CONDUCTOR, CHIP (1608)
R121	1-216-864-11	s	CONDUCTOR, CHIP (1608)
R122	1-216-864-11	s	CONDUCTOR, CHIP (1608)
R123	1-216-864-11	s	CONDUCTOR, CHIP (1608)
R124	1-216-864-11	s	CONDUCTOR, CHIP (1608)
R125	1-216-864-11	s	CONDUCTOR, CHIP (1608)
R126	1-216-864-11	s	CONDUCTOR, CHIP (1608)
R128	1-218-895-11	s	RESISTOR,CHIP 100K 1/10W(1608)
R200	1-218-903-11	s	RESISTOR,CHIP 220K 1/10W(1608)
R201	1-218-835-11	s	RESISTOR,CHIP 330 1/10W (1608)
R202	1-218-881-11	s	RESISTOR, CHIP 27K 1/10W(1608)
R203	1-218-895-11	s	RESISTOR,CHIP 100K 1/10W(1608)
R204	1-218-871-11	s	RESISTOR,CHIP 10K 1/10W (1608)
R205	1-216-864-11	s	CONDUCTOR, CHIP (1608)
R206	1-211-985-11	s	RESISTOR,CHIP 47 1/10W (1608)
R207	1-211-985-11	s	RESISTOR,CHIP 47 1/10W (1608)
R208	1-218-823-11	s	RESISTOR,CHIP 100 1/10W (1608)
R209	1-216-864-11	s	CONDUCTOR, CHIP (1608)
R210	1-216-864-11	s	CONDUCTOR, CHIP (1608)
R211	1-216-864-11	s	CONDUCTOR, CHIP (1608)
R212	1-216-864-11	s	CONDUCTOR, CHIP (1608)
R213	1-216-864-11	s	CONDUCTOR, CHIP (1608)
R214	1-216-864-11	s	CONDUCTOR, CHIP (1608)
R215	1-216-864-11	s	CONDUCTOR, CHIP (1608)
R216	1-211-980-11	s	RESISTOR,CHIP 30 1/10W(1608)
R217	1-218-446-11	s	RESISTOR,CHIP 1 (1608)
R218	1-218-446-11	s	RESISTOR,CHIP 1 (1608)
R219	1-218-446-11	s	RESISTOR,CHIP 1 (1608)
R220	1-211-985-11	s	RESISTOR,CHIP 47 1/10W (1608)
R221	1-218-847-11	s	RESISTOR, CHIP 1K 1/10W (1608)
R222	1-218-847-11	s	RESISTOR, CHIP 1K 1/10W (1608)
R300	1-216-864-11	s	CONDUCTOR, CHIP (1608)
R301	1-216-864-11	s	CONDUCTOR, CHIP (1608)
R302	1-218-823-11	s	RESISTOR,CHIP 100 1/10W (1608)
R303	1-218-823-11	s	RESISTOR,CHIP 100 1/10W (1608)
R305	1-216-864-11	s	CONDUCTOR, CHIP (1608)
R306	1-216-864-11	s	CONDUCTOR, CHIP (1608)
R307	1-218-871-11	s	RESISTOR,CHIP 10K 1/10W (1608)
R308	1-216-864-11	s	CONDUCTOR, CHIP (1608)
R309	1-211-985-11	s	RESISTOR,CHIP 47 1/10W (1608)
R310	1-211-985-11	s	RESISTOR,CHIP 47 1/10W (1608)
R311	1-211-985-11	s	RESISTOR,CHIP 47 1/10W (1608)
R312	1-211-985-11	s	RESISTOR,CHIP 47 1/10W (1608)
R329	1-216-864-11	s	CONDUCTOR, CHIP (1608)
R331	1-218-823-11	s	RESISTOR,CHIP 100 1/10W (1608)
R374	1-216-864-11	s	CONDUCTOR, CHIP (1608)
R410	1-216-864-11	s	CONDUCTOR, CHIP (1608)
R700	1-216-864-11	s	CONDUCTOR, CHIP (1608)
R705	1-218-831-11	s	RESISTOR, CHIP 220 1/10W(1608)
R708	1-211-985-11	s	RESISTOR,CHIP 47 1/10W (1608)

(EPR-1C BOARD [SUFFIX 16] for DVW)

Ref. No. or Q'ty	Part No.	SP	Description
R709	1-211-985-11	s	RESISTOR,CHIP 47 1/10W (1608)
R715	1-211-985-11	s	RESISTOR,CHIP 47 1/10W (1608)
R716	1-211-985-11	s	RESISTOR,CHIP 47 1/10W (1608)
R717	1-211-985-11	s	RESISTOR,CHIP 47 1/10W (1608)
R718	1-211-985-11	s	RESISTOR,CHIP 47 1/10W (1608)
R723	1-216-864-11	s	CONDUCTOR, CHIP (1608)
R724	1-211-985-11	s	RESISTOR,CHIP 47 1/10W (1608)
R729	1-211-977-11	s	RESISTOR,CHIP 22 1/10W (1608)
R731	1-211-977-11	s	RESISTOR,CHIP 22 1/10W (1608)
R732	1-211-977-11	s	RESISTOR,CHIP 22 1/10W (1608)
R733	1-211-977-11	s	RESISTOR,CHIP 22 1/10W (1608)
R736	1-211-985-11	s	RESISTOR,CHIP 47 1/10W (1608)
R738	1-216-864-11	s	CONDUCTOR, CHIP (1608)
R749	1-218-823-11	s	RESISTOR,CHIP 100 1/10W (1608)
R750	1-218-823-11	s	RESISTOR,CHIP 100 1/10W (1608)
R753	1-216-864-11	s	CONDUCTOR, CHIP (1608)
R754	1-216-864-11	s	CONDUCTOR, CHIP (1608)
R755	1-216-864-11	s	CONDUCTOR, CHIP (1608)
R756	1-216-864-11	s	CONDUCTOR, CHIP (1608)
R757	1-216-864-11	s	CONDUCTOR, CHIP (1608)
R758	1-216-864-11	s	CONDUCTOR, CHIP (1608)
R760	1-211-969-11	s	RESISTOR,CHIP 10 1/10W (1608)
R761	1-211-969-11	s	RESISTOR,CHIP 10 1/10W (1608)
R762	1-218-823-11	s	RESISTOR,CHIP 100 1/10W (1608)
R763	1-211-969-11	s	RESISTOR,CHIP 10 1/10W (1608)
R764	1-211-969-11	s	RESISTOR,CHIP 10 1/10W (1608)
R765	1-211-969-11	s	RESISTOR,CHIP 10 1/10W (1608)
R766	1-218-823-11	s	RESISTOR,CHIP 100 1/10W (1608)
R767	1-218-823-11	s	RESISTOR,CHIP 100 1/10W (1608)
R768	1-218-823-11	s	RESISTOR,CHIP 100 1/10W (1608)
R769	1-218-823-11	s	RESISTOR,CHIP 100 1/10W (1608)
R770	1-216-864-11	s	CONDUCTOR, CHIP (1608)
R771	1-216-864-11	s	CONDUCTOR, CHIP (1608)
R772	1-216-864-11	s	CONDUCTOR, CHIP (1608)
R774	1-216-864-11	s	CONDUCTOR, CHIP (1608)
R775	1-216-864-11	s	CONDUCTOR, CHIP (1608)
R780	1-218-823-11	s	RESISTOR,CHIP 100 1/10W (1608)
R781	1-218-823-11	s	RESISTOR,CHIP 100 1/10W (1608)
R782	1-218-823-11	s	RESISTOR,CHIP 100 1/10W (1608)
R783	1-216-864-11	s	CONDUCTOR, CHIP (1608)
R800	1-218-895-11	s	RESISTOR,CHIP 100K 1/10W(1608)
R801	1-218-895-11	s	RESISTOR,CHIP 100K 1/10W(1608)
R802	1-218-823-11	s	RESISTOR,CHIP 100 1/10W (1608)
R803	1-218-823-11	s	RESISTOR,CHIP 100 1/10W (1608)
R804	1-218-823-11	s	RESISTOR,CHIP 100 1/10W (1608)
R805	1-218-823-11	s	RESISTOR,CHIP 100 1/10W (1608)
R826	1-216-864-11	s	CONDUCTOR, CHIP (1608)
R827	1-211-985-11	s	RESISTOR,CHIP 47 1/10W (1608)
R828	1-216-864-11	s	CONDUCTOR, CHIP (1608)
R830	1-216-864-11	s	CONDUCTOR, CHIP (1608)
R832	1-216-864-11	s	CONDUCTOR, CHIP (1608)
R834	1-216-864-11	s	CONDUCTOR, CHIP (1608)
R835	1-216-864-11	s	CONDUCTOR, CHIP (1608)
R901	1-211-969-11	s	RESISTOR,CHIP 10 1/10W (1608)
R904	1-216-864-11	s	CONDUCTOR, CHIP (1608)
R905	1-218-823-11	s	RESISTOR,CHIP 100 1/10W (1608)
R906	1-218-823-11	s	RESISTOR,CHIP 100 1/10W (1608)
R907	1-218-823-11	s	RESISTOR,CHIP 100 1/10W (1608)
R908	1-216-864-11	s	CONDUCTOR, CHIP (1608)

(EPR-1C BOARD [SUFFIX 16] for DVW)

Ref. No. or Q'ty	Part No.	SP	Description
R909	1-216-864-11	s	CONDUCTOR, CHIP (1608)
R910	1-216-864-11	s	CONDUCTOR, CHIP (1608)
R911	1-216-864-11	s	CONDUCTOR, CHIP (1608)
R912	1-216-864-11	s	CONDUCTOR, CHIP (1608)
R913	1-216-864-11	s	CONDUCTOR, CHIP (1608)
R914	1-216-864-11	s	CONDUCTOR, CHIP (1608)
R915	1-216-864-11	s	CONDUCTOR, CHIP (1608)
R917	1-216-864-11	s	CONDUCTOR, CHIP (1608)
R918	1-216-864-11	s	CONDUCTOR, CHIP (1608)
R919	1-216-864-11	s	CONDUCTOR, CHIP (1608)
R920	1-218-835-11	s	RESISTOR,CHIP 330 1/10W (1608)
R921	1-218-863-11	s	RESISTOR,CHIP 4.7K 1/10W(1608)
R922	1-211-969-11	s	RESISTOR,CHIP 10 1/10W (1608)
R924	1-216-864-11	s	CONDUCTOR, CHIP (1608)
R926	1-216-864-11	s	CONDUCTOR, CHIP (1608)
R927	1-216-864-11	s	CONDUCTOR, CHIP (1608)
R1102	1-216-864-11	s	CONDUCTOR, CHIP (1608)
R1103	1-216-864-11	s	CONDUCTOR, CHIP (1608)
R1104	1-216-864-11	s	CONDUCTOR, CHIP (1608)
R1105	1-216-864-11	s	CONDUCTOR, CHIP (1608)
R1106	1-216-864-11	s	CONDUCTOR, CHIP (1608)
R1107	1-216-864-11	s	CONDUCTOR, CHIP (1608)
R1108	1-216-864-11	s	CONDUCTOR, CHIP (1608)
R1109	1-216-864-11	s	CONDUCTOR, CHIP (1608)
R1110	1-216-864-11	s	CONDUCTOR, CHIP (1608)
R1111	1-216-864-11	s	CONDUCTOR, CHIP (1608)
R1112	1-211-985-11	s	RESISTOR,CHIP 47 1/10W (1608)
R1113	1-211-985-11	s	RESISTOR,CHIP 47 1/10W (1608)
R1114	1-216-864-11	s	CONDUCTOR, CHIP (1608)
R1115	1-218-871-11	s	RESISTOR,CHIP 10K 1/10W (1608)
R1116	1-216-864-11	s	CONDUCTOR, CHIP (1608)
R1117	1-216-864-11	s	CONDUCTOR, CHIP (1608)
R1118	1-216-864-11	s	CONDUCTOR, CHIP (1608)
R1119	1-216-864-11	s	CONDUCTOR, CHIP (1608)
R1122	1-211-985-11	s	RESISTOR,CHIP 47 1/10W (1608)
R1123	1-211-985-11	s	RESISTOR,CHIP 47 1/10W (1608)
R1124	1-211-985-11	s	RESISTOR,CHIP 47 1/10W (1608)
R1125	1-211-985-11	s	RESISTOR,CHIP 47 1/10W (1608)
R1127	1-216-864-11	s	CONDUCTOR, CHIP (1608)
R1128	1-218-823-11	s	RESISTOR,CHIP 100 1/10W (1608)
R1129	1-218-823-11	s	RESISTOR,CHIP 100 1/10W (1608)
R1130	1-216-864-11	s	CONDUCTOR, CHIP (1608)
R1131	1-216-864-11	s	CONDUCTOR, CHIP (1608)
R1132	1-216-864-11	s	CONDUCTOR, CHIP (1608)
R1136	1-216-864-11	s	CONDUCTOR, CHIP (1608)
R1138	1-216-864-11	s	CONDUCTOR, CHIP (1608)
R1139	1-216-864-11	s	CONDUCTOR, CHIP (1608)
R1152	1-216-864-11	s	CONDUCTOR, CHIP (1608)
R1154	1-216-864-11	s	CONDUCTOR, CHIP (1608)
R1156	1-216-864-11	s	CONDUCTOR, CHIP (1608)
R1158	1-216-864-11	s	CONDUCTOR, CHIP (1608)
R1159	1-216-864-11	s	CONDUCTOR, CHIP (1608)
R1160	1-216-864-11	s	CONDUCTOR, CHIP (1608)
R1161	1-216-864-11	s	CONDUCTOR, CHIP (1608)
R1163	1-216-864-11	s	CONDUCTOR, CHIP (1608)
R1164	1-216-864-11	s	CONDUCTOR, CHIP (1608)
R1166	1-216-864-11	s	CONDUCTOR, CHIP (1608)
R1168	1-216-864-11	s	CONDUCTOR, CHIP (1608)
R1170	1-216-864-11	s	CONDUCTOR, CHIP (1608)

(EPR-1C BOARD [SUFFIX 16] for DVW)

Ref. No. or Q'ty	Part No.	SP	Description
RB100	1-234-397-11	s	NETWORK, RES (8 GANG) 100K
RB101	1-234-397-11	s	NETWORK, RES (8 GANG) 100K
RB102	1-234-397-11	s	NETWORK, RES (8 GANG) 100K
RB103	1-234-397-11	s	NETWORK, RES (8 GANG) 100K
RB104	1-233-576-11	s	RESISTOR,CHIP NETWORK 100
RB105	1-233-576-11	s	RESISTOR,CHIP NETWORK 100
RB106	1-233-810-21	s	RES, NETWORK 100K (3216)
RB107	1-239-409-11	s	RESISTOR NETWORK 47 (1608)
RB108	1-234-397-11	s	NETWORK, RES (8 GANG) 100K
RB109	1-234-397-11	s	NETWORK, RES (8 GANG) 100K
RB110	1-234-397-11	s	NETWORK, RES (8 GANG) 100K
RB111	1-234-397-11	s	NETWORK, RES (8 GANG) 100K
RB112	1-234-397-11	s	NETWORK, RES (8 GANG) 100K
RB113	1-233-575-11	s	RES, CHIP NETWORK 22
RB114	1-233-575-11	s	RES, CHIP NETWORK 22
RB115	1-233-575-11	s	RES, CHIP NETWORK 22
RB116	1-233-575-11	s	RES, CHIP NETWORK 22
RB117	1-233-575-11	s	RES, CHIP NETWORK 22
RB118	1-233-575-11	s	RES, CHIP NETWORK 22
RB119	1-239-409-11	s	RESISTOR NETWORK 47 (1608)
RB120	1-239-409-11	s	RESISTOR NETWORK 47 (1608)
RB121	1-233-810-21	s	RES, NETWORK 100K (3216)
RB122	1-233-810-21	s	RES, NETWORK 100K (3216)
RB123	1-233-576-11	s	RESISTOR,CHIP NETWORK 100
RB124	1-233-810-21	s	RES, NETWORK 100K (3216)
RB200	1-233-412-11	s	RESISTOR,CHIP NETWORK 1K
RB201	1-233-412-11	s	RESISTOR,CHIP NETWORK 1K
RB203	1-239-409-11	s	RESISTOR NETWORK 47 (1608)
RB204	1-239-409-11	s	RESISTOR NETWORK 47 (1608)
RB205	1-239-409-11	s	RESISTOR NETWORK 47 (1608)
RB300	1-239-409-11	s	RESISTOR NETWORK 47 (1608)
RB301	1-239-409-11	s	RESISTOR NETWORK 47 (1608)
RB302	1-239-409-11	s	RESISTOR NETWORK 47 (1608)
RB303	1-239-409-11	s	RESISTOR NETWORK 47 (1608)
RB700	1-234-522-91	s	NETWORK,RESISTOR (8 GANG) 220
RB701	1-234-522-91	s	NETWORK,RESISTOR (8 GANG) 220
RB703	1-233-576-11	s	RESISTOR,CHIP NETWORK 100
RB710	1-239-409-11	s	RESISTOR NETWORK 47 (1608)
RB711	1-233-576-11	s	RESISTOR,CHIP NETWORK 100
RB712	1-233-477-11	s	NETWORK, RES (8 GANG) 1K
RB713	1-233-477-11	s	NETWORK, RES (8 GANG) 1K
RB714	1-233-576-11	s	RESISTOR,CHIP NETWORK 100
RB715	1-233-477-11	s	NETWORK, RES (8 GANG) 1K
RB717	1-233-270-11	s	RESISTOR, NETWORK (8 GANG) 10K
RB718	1-233-576-11	s	RESISTOR,CHIP NETWORK 100
RB719	1-233-576-11	s	RESISTOR,CHIP NETWORK 100
RB720	1-233-576-11	s	RESISTOR,CHIP NETWORK 100
RB721	1-233-411-11	s	RESISTOR,CHIP NETWORK 220/3216
RB722	1-236-908-11	s	RESISTOR,NETWORK 10K (3216)
RB724	1-233-574-11	s	RESISTOR,CHIP NETWORK 10
RB800	1-239-409-11	s	RESISTOR NETWORK 47 (1608)
RB801	1-239-409-11	s	RESISTOR NETWORK 47 (1608)
RB802	1-239-409-11	s	RESISTOR NETWORK 47 (1608)
RB803	1-239-409-11	s	RESISTOR NETWORK 47 (1608)
RB804	1-239-409-11	s	RESISTOR NETWORK 47 (1608)
RB805	1-233-477-11	s	NETWORK, RES (8 GANG) 1K
RB806	1-233-477-11	s	NETWORK, RES (8 GANG) 1K
RB809	1-233-412-11	s	RESISTOR,CHIP NETWORK 1K

(EPR-1C BOARD [SUFFIX 16] for DVW)

Ref. No. or Q'ty	Part No.	SP	Description
RB901	1-236-908-11	s	RESISTOR,NETWORK 10K (3216)
RB1101	1-239-409-11	s	RESISTOR NETWORK 47 (1608)
RB1102	1-239-409-11	s	RESISTOR NETWORK 47 (1608)
RB1103	1-239-409-11	s	RESISTOR NETWORK 47 (1608)
RB1104	1-233-412-11	s	RESISTOR,CHIP NETWORK 1K
TP200	1-535-877-22	s	CHIP,CHECKER (TEST POINT)
TP201	1-535-877-22	s	CHIP,CHECKER (TEST POINT)
TP700	1-535-877-22	s	CHIP,CHECKER (TEST POINT)
TP701	1-535-877-22	s	CHIP,CHECKER (TEST POINT)
TP702	1-535-877-22	s	CHIP,CHECKER (TEST POINT)
TP703	1-535-877-22	s	CHIP,CHECKER (TEST POINT)
X1101	1-781-828-22	s	OSCILLATOR, CRYSTAL (SMD)
X1102	1-781-829-22	s	OSCILLATOR, CRYSTAL (SMD)

EPR-1C BOARD [SUFFIX 17-] for DVW

[Lot No. 561 -] DVW-2000/P, M2000/P

Ref. No. or Q'ty	Part No.	SP	Description
1pc	A-8347-767-A	s	MOUNTED CIRCUIT BOARD, EPR-1C
1pc	3-179-084-11	s	LEVER (R), C BOARD
1pc	3-179-085-11	s	LEVER (L), C BOARD
C5	1-127-692-91	s	CAP, CHIP CERAMIC 10MF B 3216
C6	1-127-692-91	s	CAP, CHIP CERAMIC 10MF B 3216
C11	1-165-811-11	s	CAPACITOR CHIP CERAMIC 22MF B
C12	1-165-811-11	s	CAPACITOR CHIP CERAMIC 22MF B
C51	1-127-861-11	s	CAP, CERAMIC 2.2MF B (3216)
C52	1-127-861-11	s	CAP, CERAMIC 2.2MF B (3216)
C61	1-127-861-11	s	CAP, CERAMIC 2.2MF B (3216)
C62	1-127-861-11	s	CAP, CERAMIC 2.2MF B (3216)
C100	1-127-692-91	s	CAP, CHIP CERAMIC 10MF B 3216
C101	1-107-826-11	s	CAPACITOR,CHIP CERAMIC 0.1MF
C102	1-127-692-91	s	CAP, CHIP CERAMIC 10MF B 3216
C103	1-107-826-11	s	CAPACITOR,CHIP CERAMIC 0.1MF
C104	1-107-826-11	s	CAPACITOR,CHIP CERAMIC 0.1MF
C105	1-107-826-11	s	CAPACITOR,CHIP CERAMIC 0.1MF
C106	1-107-826-11	s	CAPACITOR,CHIP CERAMIC 0.1MF
C107	1-107-826-11	s	CAPACITOR,CHIP CERAMIC 0.1MF
C108	1-107-826-11	s	CAPACITOR,CHIP CERAMIC 0.1MF
C112	1-107-826-11	s	CAPACITOR,CHIP CERAMIC 0.1MF
C113	1-107-826-11	s	CAPACITOR,CHIP CERAMIC 0.1MF
C114	1-107-826-11	s	CAPACITOR,CHIP CERAMIC 0.1MF
C115	1-107-826-11	s	CAPACITOR,CHIP CERAMIC 0.1MF
C117	1-107-826-11	s	CAPACITOR,CHIP CERAMIC 0.1MF
C315	1-127-692-91	s	CAP, CHIP CERAMIC 10MF B 3216
C354	1-107-826-11	s	CAPACITOR,CHIP CERAMIC 0.1MF
C701	1-107-826-11	s	CAPACITOR,CHIP CERAMIC 0.1MF
C702	1-127-692-91	s	CAP, CHIP CERAMIC 10MF B 3216
C703	1-107-826-11	s	CAPACITOR,CHIP CERAMIC 0.1MF
C704	1-107-826-11	s	CAPACITOR,CHIP CERAMIC 0.1MF
C705	1-107-826-11	s	CAPACITOR,CHIP CERAMIC 0.1MF
C706	1-107-826-11	s	CAPACITOR,CHIP CERAMIC 0.1MF
C707	1-107-826-11	s	CAPACITOR,CHIP CERAMIC 0.1MF
C710	1-107-826-11	s	CAPACITOR,CHIP CERAMIC 0.1MF
C713	1-107-826-11	s	CAPACITOR,CHIP CERAMIC 0.1MF
C715	1-107-826-11	s	CAPACITOR,CHIP CERAMIC 0.1MF
C716	1-107-826-11	s	CAPACITOR,CHIP CERAMIC 0.1MF
C717	1-107-826-11	s	CAPACITOR,CHIP CERAMIC 0.1MF
C718	1-127-692-91	s	CAP, CHIP CERAMIC 10MF B 3216
C720	1-107-826-11	s	CAPACITOR,CHIP CERAMIC 0.1MF
C721	1-127-692-91	s	CAP, CHIP CERAMIC 10MF B 3216
C810	1-107-826-11	s	CAPACITOR,CHIP CERAMIC 0.1MF
C812	1-127-692-91	s	CAP, CHIP CERAMIC 10MF B 3216
C902	1-127-692-91	s	CAP, CHIP CERAMIC 10MF B 3216
C915	1-107-826-11	s	CAPACITOR,CHIP CERAMIC 0.1MF
C916	1-107-826-11	s	CAPACITOR,CHIP CERAMIC 0.1MF
C1101	1-127-692-91	s	CAP, CHIP CERAMIC 10MF B 3216
C1102	1-107-826-11	s	CAPACITOR,CHIP CERAMIC 0.1MF
C1103	1-107-826-11	s	CAPACITOR,CHIP CERAMIC 0.1MF
C1104	1-127-692-91	s	CAP, CHIP CERAMIC 10MF B 3216
C1105	1-107-826-11	s	CAPACITOR,CHIP CERAMIC 0.1MF
C1106	1-107-826-11	s	CAPACITOR,CHIP CERAMIC 0.1MF
C1107	1-107-826-11	s	CAPACITOR,CHIP CERAMIC 0.1MF
C1108	1-107-826-11	s	CAPACITOR,CHIP CERAMIC 0.1MF
C1109	1-107-826-11	s	CAPACITOR,CHIP CERAMIC 0.1MF
C1110	1-107-826-11	s	CAPACITOR,CHIP CERAMIC 0.1MF

(EPR-1C BOARD [SUFFIX 17-] for DVW)

Ref. No. or Q'ty	Part No.	SP	Description
C1111	1-107-826-11	s	CAPACITOR,CHIP CERAMIC 0.1MF
C1112	1-107-826-11	s	CAPACITOR,CHIP CERAMIC 0.1MF
C1113	1-107-826-11	s	CAPACITOR,CHIP CERAMIC 0.1MF
C1114	1-107-826-11	s	CAPACITOR,CHIP CERAMIC 0.1MF
C1115	1-107-826-11	s	CAPACITOR,CHIP CERAMIC 0.1MF
C1116	1-107-826-11	s	CAPACITOR,CHIP CERAMIC 0.1MF
C1117	1-107-826-11	s	CAPACITOR,CHIP CERAMIC 0.1MF
C1118	1-162-922-11	s	CAPACITOR,CERAMIC 39PF/50V CH
C1119	1-107-826-11	s	CAPACITOR,CHIP CERAMIC 0.1MF
C1120	1-107-826-11	s	CAPACITOR,CHIP CERAMIC 0.1MF
C1121	1-107-826-11	s	CAPACITOR,CHIP CERAMIC 0.1MF
C1122	1-107-826-11	s	CAPACITOR,CHIP CERAMIC 0.1MF
C1123	1-107-826-11	s	CAPACITOR,CHIP CERAMIC 0.1MF
C1124	1-107-826-11	s	CAPACITOR,CHIP CERAMIC 0.1MF
C1125	1-107-826-11	s	CAPACITOR,CHIP CERAMIC 0.1MF
C1126	1-107-826-11	s	CAPACITOR,CHIP CERAMIC 0.1MF
C1127	1-107-826-11	s	CAPACITOR,CHIP CERAMIC 0.1MF
C1128	1-107-826-11	s	CAPACITOR,CHIP CERAMIC 0.1MF
C1129	1-107-826-11	s	CAPACITOR,CHIP CERAMIC 0.1MF
C1130	1-107-826-11	s	CAPACITOR,CHIP CERAMIC 0.1MF
C1131	1-107-826-11	s	CAPACITOR,CHIP CERAMIC 0.1MF
C1132	1-107-826-11	s	CAPACITOR,CHIP CERAMIC 0.1MF
C1133	1-127-692-91	s	CAP, CHIP CERAMIC 10MF B 3216
C1134	1-107-826-11	s	CAPACITOR,CHIP CERAMIC 0.1MF
C1135	1-107-826-11	s	CAPACITOR,CHIP CERAMIC 0.1MF
C1136	1-107-826-11	s	CAPACITOR,CHIP CERAMIC 0.1MF
C1137	1-107-826-11	s	CAPACITOR,CHIP CERAMIC 0.1MF
C1138	1-107-826-11	s	CAPACITOR,CHIP CERAMIC 0.1MF
C1139	1-107-826-11	s	CAPACITOR,CHIP CERAMIC 0.1MF
C1140	1-107-826-11	s	CAPACITOR,CHIP CERAMIC 0.1MF
C1141	1-107-826-11	s	CAPACITOR,CHIP CERAMIC 0.1MF
C1142	1-107-826-11	s	CAPACITOR,CHIP CERAMIC 0.1MF
C1143	1-107-826-11	s	CAPACITOR,CHIP CERAMIC 0.1MF
C1144	1-107-826-11	s	CAPACITOR,CHIP CERAMIC 0.1MF
C1145	1-107-826-11	s	CAPACITOR,CHIP CERAMIC 0.1MF
C1146	1-107-826-11	s	CAPACITOR,CHIP CERAMIC 0.1MF
C1147	1-107-826-11	s	CAPACITOR,CHIP CERAMIC 0.1MF
C1148	1-107-826-11	s	CAPACITOR,CHIP CERAMIC 0.1MF
C1149	1-127-692-91	s	CAP, CHIP CERAMIC 10MF B 3216
C1150	1-127-692-91	s	CAP, CHIP CERAMIC 10MF B 3216
C1151	1-107-826-11	s	CAPACITOR,CHIP CERAMIC 0.1MF
C1152	1-107-826-11	s	CAPACITOR,CHIP CERAMIC 0.1MF
C1153	1-107-826-11	s	CAPACITOR,CHIP CERAMIC 0.1MF
C1154	1-107-826-11	s	CAPACITOR,CHIP CERAMIC 0.1MF
C1155	1-107-826-11	s	CAPACITOR,CHIP CERAMIC 0.1MF
CN1	1-580-789-91	s	PIN, CONNECTOR 6P
E101	1-535-877-22	s	CHIP,CHECKER (TEST POINT)
E300	1-535-877-22	s	CHIP,CHECKER (TEST POINT)
E500	1-535-877-22	s	CHIP,CHECKER (TEST POINT)
E600	1-535-877-22	s	CHIP,CHECKER (TEST POINT)
E1101	1-535-877-22	s	CHIP,CHECKER (TEST POINT)
E1201	1-535-877-22	s	CHIP,CHECKER (TEST POINT)
F2	⚠ 1-576-270-11	s	FUSE CHIP 4A/125V (6125)
F3	⚠ 1-576-270-11	s	FUSE CHIP 4A/125V (6125)
IC1	8-759-523-81	s	IC TC74VHC08FT(EL)
IC100	8-759-392-77	s	IC SN74LVC245APW (E20)
IC101	8-759-549-15	s	IC SN74LV245APWR

(EPR-1C BOARD [SUFFIX 17-] for DVW)

Ref. No. or Q'ty	Part No.	SP	Description
IC102	8-759-549-15	s	IC SN74LV245APWR
IC103	8-759-392-77	s	IC SN74LVC245APW (E20)
IC104	8-759-524-07	s	IC TC74VHC138FT(EL)
IC108	8-759-523-81	s	IC TC74VHC08FT(EL)
IC109	8-759-524-07	s	IC TC74VHC138FT(EL)
IC110	8-759-524-07	s	IC TC74VHC138FT(EL)
IC111	8-752-392-03	s	IC CXD1095BR
IC113	8-759-523-94	s	IC TC74VHC32FT(EL)
IC114	8-759-497-44	s	IC TC7WH125FU(TE12R)
IC115	8-759-549-15	s	IC SN74LV245APWR
IC116	6-706-487-01	s	IC TC7SH08FU(T5RSOYJF)
IC117	8-759-549-15	s	IC SN74LV245APWR
IC305	8-759-531-92	s	IC TC7WH04FU(TE12R)
IC701	8-759-392-77	s	IC SN74LVC245APW (E20)
IC702	8-759-524-52	s	IC TC74VHC574FT(EL)
IC703	8-759-524-52	s	IC TC74VHC574FT(EL)
IC704	8-759-524-52	s	IC TC74VHC574FT(EL)
IC705	8-759-392-77	s	IC SN74LVC245APW (E20)
IC706	8-759-549-15	s	IC SN74LV245APWR
IC707	8-759-549-15	s	IC SN74LV245APWR
IC709	8-759-549-15	s	IC SN74LV245APWR
IC712	8-759-524-10	s	IC TC74VHC157FT (EL)
IC714	8-759-549-15	s	IC SN74LV245APWR
IC715	8-759-549-15	s	IC SN74LV245APWR
IC717	8-759-392-77	s	IC SN74LVC245APW (E20)
IC819	8-759-712-32	s	IC SN65LVDS389DBTR
IC901	6-804-732-02	s	IC XC18V02-EPR1-V100
IC902	8-759-524-27	s	IC TC74VHC244FT(EL)
IC1101	8-759-592-44	s	IC TC7SZ04FU(TE85R)
IC1102	8-759-188-02	s	IC CXD8854Q
IC1103	8-759-177-72	s	IC CXD8806R
IC1104	6-704-713-01	s	IC XC2S50-5TQG144C
IC1108	6-705-168-01	s	IC CY7C1019CV33-12ZCT
IC1109	6-705-168-01	s	IC CY7C1019CV33-12ZCT
IC1110	6-705-168-01	s	IC CY7C1019CV33-12ZCT
IC1111	6-705-168-01	s	IC CY7C1019CV33-12ZCT
L100	1-412-923-21	s	INDUCTOR CHIP 0.047UH (2520)
L101	1-412-923-21	s	INDUCTOR CHIP 0.047UH (2520)
L700	1-412-923-21	s	INDUCTOR CHIP 0.047UH (2520)
L701	1-412-923-21	s	INDUCTOR CHIP 0.047UH (2520)
L702	1-412-923-21	s	INDUCTOR CHIP 0.047UH (2520)
L801	1-412-923-21	s	INDUCTOR CHIP 0.047UH (2520)
L1101	1-412-923-21	s	INDUCTOR CHIP 0.047UH (2520)
Q1	8-729-928-81	s	TRANSISTOR DTC144EE
Q51	8-729-928-19	s	TRANSISTOR 2SA1774R
Q52	8-729-047-32	s	TRANSISTOR SI4425DY-T1
Q61	8-729-928-19	s	TRANSISTOR 2SA1774R
Q62	8-729-047-32	s	TRANSISTOR SI4425DY-T1
R51	1-218-847-11	s	RESISTOR, CHIP 1K 1/10W (1608)
R52	1-218-847-11	s	RESISTOR, CHIP 1K 1/10W (1608)
R53	1-218-835-11	s	RESISTOR,CHIP 330 1/10W (1608)
R54	1-218-835-11	s	RESISTOR,CHIP 330 1/10W (1608)
R61	1-218-847-11	s	RESISTOR, CHIP 1K 1/10W (1608)
R62	1-218-847-11	s	RESISTOR, CHIP 1K 1/10W (1608)
R63	1-218-835-11	s	RESISTOR,CHIP 330 1/10W (1608)
R64	1-218-835-11	s	RESISTOR,CHIP 330 1/10W (1608)
R100	1-218-895-11	s	RESISTOR,CHIP 100K 1/10W(1608)
R101	1-218-895-11	s	RESISTOR,CHIP 100K 1/10W(1608)

(EPR-1C BOARD [SUFFIX 17-] for DVW)

Ref. No. or Q'ty	Part No.	SP	Description
R102	1-218-863-11	s	RESISTOR,CHIP 4.7K 1/10W(1608)
R104	1-216-864-11	s	CONDUCTOR, CHIP (1608)
R106	1-218-895-11	s	RESISTOR,CHIP 100K 1/10W(1608)
R107	1-211-977-11	s	RESISTOR,CHIP 22 1/10W (1608)
R109	1-211-977-11	s	RESISTOR,CHIP 22 1/10W (1608)
R110	1-211-977-11	s	RESISTOR,CHIP 22 1/10W (1608)
R120	1-216-864-11	s	CONDUCTOR, CHIP (1608)
R121	1-216-864-11	s	CONDUCTOR, CHIP (1608)
R122	1-216-864-11	s	CONDUCTOR, CHIP (1608)
R123	1-216-864-11	s	CONDUCTOR, CHIP (1608)
R124	1-216-864-11	s	CONDUCTOR, CHIP (1608)
R125	1-216-864-11	s	CONDUCTOR, CHIP (1608)
R126	1-216-864-11	s	CONDUCTOR, CHIP (1608)
R128	1-218-895-11	s	RESISTOR,CHIP 100K 1/10W(1608)
R206	1-211-985-11	s	RESISTOR,CHIP 47 1/10W (1608)
R207	1-211-985-11	s	RESISTOR,CHIP 47 1/10W (1608)
R304	1-216-864-11	s	CONDUCTOR, CHIP (1608)
R329	1-216-864-11	s	CONDUCTOR, CHIP (1608)
R337	1-216-864-11	s	CONDUCTOR, CHIP (1608)
R374	1-216-864-11	s	CONDUCTOR, CHIP (1608)
R375	1-216-864-11	s	CONDUCTOR, CHIP (1608)
R410	1-216-864-11	s	CONDUCTOR, CHIP (1608)
R700	1-216-864-11	s	CONDUCTOR, CHIP (1608)
R705	1-218-831-11	s	RESISTOR, CHIP 220 1/10W(1608)
R708	1-211-985-11	s	RESISTOR,CHIP 47 1/10W (1608)
R709	1-211-985-11	s	RESISTOR,CHIP 47 1/10W (1608)
R715	1-211-985-11	s	RESISTOR,CHIP 47 1/10W (1608)
R724	1-211-985-11	s	RESISTOR,CHIP 47 1/10W (1608)
R732	1-211-977-11	s	RESISTOR,CHIP 22 1/10W (1608)
R736	1-211-985-11	s	RESISTOR,CHIP 47 1/10W (1608)
R738	1-216-864-11	s	CONDUCTOR, CHIP (1608)
R749	1-218-823-11	s	RESISTOR,CHIP 100 1/10W (1608)
R750	1-218-823-11	s	RESISTOR,CHIP 100 1/10W (1608)
R753	1-216-864-11	s	CONDUCTOR, CHIP (1608)
R754	1-216-864-11	s	CONDUCTOR, CHIP (1608)
R755	1-216-864-11	s	CONDUCTOR, CHIP (1608)
R756	1-216-864-11	s	CONDUCTOR, CHIP (1608)
R757	1-216-864-11	s	CONDUCTOR, CHIP (1608)
R758	1-216-864-11	s	CONDUCTOR, CHIP (1608)
R774	1-216-864-11	s	CONDUCTOR, CHIP (1608)
R775	1-216-864-11	s	CONDUCTOR, CHIP (1608)
R783	1-216-864-11	s	CONDUCTOR, CHIP (1608)
R828	1-216-864-11	s	CONDUCTOR, CHIP (1608)
R830	1-216-864-11	s	CONDUCTOR, CHIP (1608)
R832	1-216-864-11	s	CONDUCTOR, CHIP (1608)
R835	1-216-864-11	s	CONDUCTOR, CHIP (1608)
R845	1-216-864-11	s	CONDUCTOR, CHIP (1608)
R846	1-216-864-11	s	CONDUCTOR, CHIP (1608)
R847	1-216-864-11	s	CONDUCTOR, CHIP (1608)
R848	1-216-864-11	s	CONDUCTOR, CHIP (1608)
R920	1-218-835-11	s	RESISTOR,CHIP 330 1/10W (1608)
R921	1-218-863-11	s	RESISTOR,CHIP 4.7K 1/10W(1608)
R931	1-216-864-11	s	CONDUCTOR, CHIP (1608)
R1102	1-216-864-11	s	CONDUCTOR, CHIP (1608)
R1103	1-216-864-11	s	CONDUCTOR, CHIP (1608)
R1104	1-216-864-11	s	CONDUCTOR, CHIP (1608)
R1105	1-216-864-11	s	CONDUCTOR, CHIP (1608)
R1106	1-216-864-11	s	CONDUCTOR, CHIP (1608)
R1107	1-216-864-11	s	CONDUCTOR, CHIP (1608)

(EPR-1C BOARD [SUFFIX 17-] for DVW)

Ref. No. or Q'ty	Part No.	SP	Description
R1108	1-216-864-11	s	CONDUCTOR, CHIP (1608)
R1109	1-216-864-11	s	CONDUCTOR, CHIP (1608)
R1110	1-216-864-11	s	CONDUCTOR, CHIP (1608)
R1111	1-216-864-11	s	CONDUCTOR, CHIP (1608)
R1112	1-211-985-11	s	RESISTOR,CHIP 47 1/10W (1608)
R1113	1-211-985-11	s	RESISTOR,CHIP 47 1/10W (1608)
R1114	1-216-864-11	s	CONDUCTOR, CHIP (1608)
R1115	1-218-871-11	s	RESISTOR,CHIP 10K 1/10W (1608)
R1116	1-216-864-11	s	CONDUCTOR, CHIP (1608)
R1117	1-216-864-11	s	CONDUCTOR, CHIP (1608)
R1118	1-216-864-11	s	CONDUCTOR, CHIP (1608)
R1119	1-216-864-11	s	CONDUCTOR, CHIP (1608)
R1122	1-211-985-11	s	RESISTOR,CHIP 47 1/10W (1608)
R1123	1-211-985-11	s	RESISTOR,CHIP 47 1/10W (1608)
R1124	1-211-985-11	s	RESISTOR,CHIP 47 1/10W (1608)
R1125	1-211-985-11	s	RESISTOR,CHIP 47 1/10W (1608)
R1126	1-216-864-11	s	CONDUCTOR, CHIP (1608)
R1128	1-218-823-11	s	RESISTOR,CHIP 100 1/10W (1608)
R1129	1-218-823-11	s	RESISTOR,CHIP 100 1/10W (1608)
R1130	1-216-864-11	s	CONDUCTOR, CHIP (1608)
R1131	1-216-864-11	s	CONDUCTOR, CHIP (1608)
R1132	1-216-864-11	s	CONDUCTOR, CHIP (1608)
R1136	1-216-864-11	s	CONDUCTOR, CHIP (1608)
R1138	1-216-864-11	s	CONDUCTOR, CHIP (1608)
R1139	1-216-864-11	s	CONDUCTOR, CHIP (1608)
R1140	1-216-864-11	s	CONDUCTOR, CHIP (1608)
R1150	1-216-864-11	s	CONDUCTOR, CHIP (1608)
R1151	1-216-864-11	s	CONDUCTOR, CHIP (1608)
R1152	1-216-864-11	s	CONDUCTOR, CHIP (1608)
R1154	1-216-864-11	s	CONDUCTOR, CHIP (1608)
R1156	1-216-864-11	s	CONDUCTOR, CHIP (1608)
R1158	1-216-864-11	s	CONDUCTOR, CHIP (1608)
R1163	1-216-864-11	s	CONDUCTOR, CHIP (1608)
R1164	1-216-864-11	s	CONDUCTOR, CHIP (1608)
R1166	1-216-864-11	s	CONDUCTOR, CHIP (1608)
R1168	1-216-864-11	s	CONDUCTOR, CHIP (1608)
R1170	1-216-864-11	s	CONDUCTOR, CHIP (1608)
RB100	1-234-397-11	s	NETWORK, RES (8 GANG) 100K
RB101	1-234-397-11	s	NETWORK, RES (8 GANG) 100K
RB102	1-234-397-11	s	NETWORK, RES (8 GANG) 100K
RB103	1-234-397-11	s	NETWORK, RES (8 GANG) 100K
RB104	1-233-576-11	s	RESISTOR,CHIP NETWORK 100
RB105	1-233-576-11	s	RESISTOR,CHIP NETWORK 100
RB106	1-233-810-21	s	RES, NETWORK 100K (3216)
RB107	1-239-409-11	s	RESISTOR NETWORK 47 (3216)
RB108	1-234-397-11	s	NETWORK, RES (8 GANG) 100K
RB109	1-234-397-11	s	NETWORK, RES (8 GANG) 100K
RB110	1-234-397-11	s	NETWORK, RES (8 GANG) 100K
RB111	1-234-397-11	s	NETWORK, RES (8 GANG) 100K
RB112	1-234-397-11	s	NETWORK, RES (8 GANG) 100K
RB113	1-233-575-11	s	RES, CHIP NETWORK 22
RB114	1-233-575-11	s	RES, CHIP NETWORK 22
RB115	1-233-575-11	s	RES, CHIP NETWORK 22
RB116	1-233-575-11	s	RES, CHIP NETWORK 22
RB117	1-233-575-11	s	RES, CHIP NETWORK 22
RB118	1-233-575-11	s	RES, CHIP NETWORK 22
RB119	1-239-409-11	s	RESISTOR NETWORK 47 (3216)
RB120	1-239-409-11	s	RESISTOR NETWORK 47 (3216)

(EPR-1C BOARD [SUFFIX 17-] for DVW)

Ref. No. or Q'ty	Part No.	SP	Description
RB121	1-233-810-21	s	RES, NETWORK 100K (3216)
RB122	1-233-810-21	s	RES, NETWORK 100K (3216)
RB123	1-233-576-11	s	RESISTOR,CHIP NETWORK 100
RB124	1-233-810-21	s	RES, NETWORK 100K (3216)
RB300	1-239-409-11	s	RESISTOR NETWORK 47 (3216)
RB301	1-239-409-11	s	RESISTOR NETWORK 47 (3216)
RB302	1-239-409-11	s	RESISTOR NETWORK 47 (3216)
RB303	1-239-409-11	s	RESISTOR NETWORK 47 (3216)
RB700	1-234-522-91	s	NETWORK,RESISTOR (8 GANG) 220
RB701	1-234-522-91	s	NETWORK,RESISTOR (8 GANG) 220
RB703	1-233-576-11	s	RESISTOR,CHIP NETWORK 100
RB710	1-239-409-11	s	RESISTOR NETWORK 47 (3216)
RB712	1-233-477-11	s	NETWORK, RES (8 GANG) 1K
RB713	1-233-477-11	s	NETWORK, RES (8 GANG) 1K
RB717	1-233-270-11	s	RESISTOR, NETWORK (8 GANG) 10K
RB720	1-233-576-11	s	RESISTOR,CHIP NETWORK 100
RB721	1-233-411-11	s	RESISTOR,CHIP NETWORK 220/3216
RB722	1-236-908-11	s	RESISTOR,NETWORK 10K (3216)
RB724	1-233-574-11	s	RESISTOR,CHIP NETWORK 10
RB901	1-236-908-11	s	RESISTOR,NETWORK 10K (3216)
RB1101	1-239-409-11	s	RESISTOR NETWORK 47 (3216)
RB1102	1-239-409-11	s	RESISTOR NETWORK 47 (3216)
RB1103	1-239-409-11	s	RESISTOR NETWORK 47 (3216)
RB1104	1-233-412-11	s	RESISTOR,CHIP NETWORK 1K
TP200	1-535-877-22	s	CHIP,CHECKER (TEST POINT)
TP201	1-535-877-22	s	CHIP,CHECKER (TEST POINT)
TP700	1-535-877-22	s	CHIP,CHECKER (TEST POINT)
TP701	1-535-877-22	s	CHIP,CHECKER (TEST POINT)
TP702	1-535-877-22	s	CHIP,CHECKER (TEST POINT)
TP703	1-535-877-22	s	CHIP,CHECKER (TEST POINT)
X1101	1-781-828-22	s	OSCILLATOR, CRYSTAL (SMD)
X1102	1-781-829-22	s	OSCILLATOR, CRYSTAL (SMD)

EQ-84/H BOARD [SUFFIX 12] for RECORDER

---

*H: [Lot No. 261 - 385] HDW-2000, M2000/P
MSW-2000
*M: [Lot No. 261 - 385] MSW-M2000/P, A2000/P

Ref. No. or Q'ty	Part No.	SP	Description
1pc	*H A-8327-515-B	o	MOUNTED CIRCUIT BOARD, EQ-84H
	*M A-8324-888-B	o	MOUNTED CIRCUIT BOARD, EQ-84
2pcs	*H 4-352-844-01	s	PIN, LEAD, COATING
1pc	3-179-084-11	s	LEVER(R),PRINTED C,BOARD
C100	1-164-156-11	s	CAPACITOR,CERAMIC 0.1MF/25V F
C101	1-164-156-11	s	CAPACITOR,CERAMIC 0.1MF/25V F
C102	1-131-661-11	s	CAPACITOR,ELECT 100MF/10V CHIP
C103	1-126-392-11	s	CAPACITOR,CHIP ELECT100MF/6.3V
C104	1-126-392-11	s	CAPACITOR,CHIP ELECT100MF/6.3V
C105	1-131-661-11	s	CAPACITOR,ELECT 100MF/10V CHIP
C106	1-164-156-11	s	CAPACITOR,CERAMIC 0.1MF/25V F
C107	1-164-156-11	s	CAPACITOR,CERAMIC 0.1MF/25V F
C108	1-164-156-11	s	CAPACITOR,CERAMIC 0.1MF/25V F
C109	1-164-156-11	s	CAPACITOR,CERAMIC 0.1MF/25V F
C110	1-164-156-11	s	CAPACITOR,CERAMIC 0.1MF/25V F
C200	1-164-156-11	s	CAPACITOR,CERAMIC 0.1MF/25V F
C201	1-162-915-11	s	CAPACITOR,CERAMIC 10PF/50V CH
C202	1-162-915-11	s	CAPACITOR,CERAMIC 10PF/50V CH
C203	1-164-315-11	s	CAPACITOR,CERAMIC 470PF/50V CH
C205	1-164-315-11	s	CAPACITOR,CERAMIC 470PF/50V CH
C206	1-164-315-11	s	CAPACITOR,CERAMIC 470PF/50V CH
C207	1-164-315-11	s	CAPACITOR,CERAMIC 470PF/50V CH
C209	1-164-156-11	s	CAPACITOR,CERAMIC 0.1MF/25V F
C210	1-164-156-11	s	CAPACITOR,CERAMIC 0.1MF/25V F
C211	1-164-156-11	s	CAPACITOR,CERAMIC 0.1MF/25V F
C213	1-164-156-11	s	CAPACITOR,CERAMIC 0.1MF/25V F
C214	1-164-156-11	s	CAPACITOR,CERAMIC 0.1MF/25V F
C215	1-164-156-11	s	CAPACITOR,CERAMIC 0.1MF/25V F
C216	1-164-156-11	s	CAPACITOR,CERAMIC 0.1MF/25V F
C217	1-164-156-11	s	CAPACITOR,CERAMIC 0.1MF/25V F
C218	1-164-156-11	s	CAPACITOR,CERAMIC 0.1MF/25V F
C219	1-126-391-11	s	CAPACITOR ELECT 47MF/6.3V(105)
C220	1-126-391-11	s	CAPACITOR ELECT 47MF/6.3V(105)
C221	1-164-156-11	s	CAPACITOR,CERAMIC 0.1MF/25V F
C222	1-164-156-11	s	CAPACITOR,CERAMIC 0.1MF/25V F
C223	1-164-156-11	s	CAPACITOR,CERAMIC 0.1MF/25V F
C224	1-164-156-11	s	CAPACITOR,CERAMIC 0.1MF/25V F
C225	1-164-156-11	s	CAPACITOR,CERAMIC 0.1MF/25V F
C226	1-164-156-11	s	CAPACITOR,CERAMIC 0.1MF/25V F
C300	1-164-156-11	s	CAPACITOR,CERAMIC 0.1MF/25V F
C301	1-164-156-11	s	CAPACITOR,CERAMIC 0.1MF/25V F
C302	1-164-156-11	s	CAPACITOR,CERAMIC 0.1MF/25V F
C303	1-164-156-11	s	CAPACITOR,CERAMIC 0.1MF/25V F
C304	1-164-156-11	s	CAPACITOR,CERAMIC 0.1MF/25V F
C305	1-164-156-11	s	CAPACITOR,CERAMIC 0.1MF/25V F
C306	1-164-156-11	s	CAPACITOR,CERAMIC 0.1MF/25V F
C307	1-164-156-11	s	CAPACITOR,CERAMIC 0.1MF/25V F
C308	1-164-156-11	s	CAPACITOR,CERAMIC 0.1MF/25V F
C309	1-162-964-11	s	CAPACITOR,CERAMIC 1000PF/50V B
C310	1-164-156-11	s	CAPACITOR,CERAMIC 0.1MF/25V F
C311	1-162-923-11	s	CAPACITOR,CERAMIC 47PF/50V CH
C312	1-164-156-11	s	CAPACITOR,CERAMIC 0.1MF/25V F
C313	1-164-156-11	s	CAPACITOR,CERAMIC 0.1MF/25V F
C314	1-164-156-11	s	CAPACITOR,CERAMIC 0.1MF/25V F
C315	1-164-156-11	s	CAPACITOR,CERAMIC 0.1MF/25V F

(EQ-84/H BOARD [SUFFIX 12] for RECORDER)

Ref. No. or Q'ty	Part No.	SP	Description
C316	1-164-156-11	s	CAPACITOR,CERAMIC 0.1MF/25V F
C317	1-164-156-11	s	CAPACITOR,CERAMIC 0.1MF/25V F
C318	1-164-156-11	s	CAPACITOR,CERAMIC 0.1MF/25V F
C319	1-164-156-11	s	CAPACITOR,CERAMIC 0.1MF/25V F
C320	1-164-156-11	s	CAPACITOR,CERAMIC 0.1MF/25V F
C321	1-164-388-11	s	CAPACITOR,CERAMIC 270PF/50V CH
C322	1-164-388-11	s	CAPACITOR,CERAMIC 270PF/50V CH
C323	1-162-928-11	s	CAPACITOR,CERAMIC 120PF/50V CH
C324	1-164-156-11	s	CAPACITOR,CERAMIC 0.1MF/25V F
C325	1-164-156-11	s	CAPACITOR,CERAMIC 0.1MF/25V F
C326	1-164-156-11	s	CAPACITOR,CERAMIC 0.1MF/25V F
C327	1-164-156-11	s	CAPACITOR,CERAMIC 0.1MF/25V F
C328	1-164-156-11	s	CAPACITOR,CERAMIC 0.1MF/25V F
C329	1-164-156-11	s	CAPACITOR,CERAMIC 0.1MF/25V F
C330	1-164-156-11	s	CAPACITOR,CERAMIC 0.1MF/25V F
C331	1-164-156-11	s	CAPACITOR,CERAMIC 0.1MF/25V F
C332	1-164-156-11	s	CAPACITOR,CERAMIC 0.1MF/25V F
C333	1-164-156-11	s	CAPACITOR,CERAMIC 0.1MF/25V F
C334	1-164-156-11	s	CAPACITOR,CERAMIC 0.1MF/25V F
C600	1-164-156-11	s	CAPACITOR,CERAMIC 0.1MF/25V F
C601	1-164-156-11	s	CAPACITOR,CERAMIC 0.1MF/25V F
C602	1-164-156-11	s	CAPACITOR,CERAMIC 0.1MF/25V F
C603	1-164-156-11	s	CAPACITOR,CERAMIC 0.1MF/25V F
C604	1-164-156-11	s	CAPACITOR,CERAMIC 0.1MF/25V F
C605	1-164-156-11	s	CAPACITOR,CERAMIC 0.1MF/25V F
C606	1-164-156-11	s	CAPACITOR,CERAMIC 0.1MF/25V F
C607	1-162-919-11	s	CAPACITOR,CERAMIC 22PF/50V CH
C608	1-162-927-11	s	CAPACITOR,CERAMIC 100PF/50V CH
C609	1-164-156-11	s	CAPACITOR,CERAMIC 0.1MF/25V F
C610	1-164-156-11	s	CAPACITOR,CERAMIC 0.1MF/25V F
C611	1-164-156-11	s	CAPACITOR,CERAMIC 0.1MF/25V F
C612	1-164-156-11	s	CAPACITOR,CERAMIC 0.1MF/25V F
C613	1-164-156-11	s	CAPACITOR,CERAMIC 0.1MF/25V F
C614	1-164-156-11	s	CAPACITOR,CERAMIC 0.1MF/25V F
C616	1-164-156-11	s	CAPACITOR,CERAMIC 0.1MF/25V F
C618	1-164-156-11	s	CAPACITOR,CERAMIC 0.1MF/25V F
C619	1-164-156-11	s	CAPACITOR,CERAMIC 0.1MF/25V F
C620	1-162-921-11	s	CAPACITOR,CERAMIC 33PF/50V CH
C621	1-164-156-11	s	CAPACITOR,CERAMIC 0.1MF/25V F
C622	1-162-927-11	s	CAPACITOR,CERAMIC 100PF/50V CH
C623	1-162-970-11	s	CAPACITOR CERAMIC 0.01MF/25V B
C624	1-162-970-11	s	CAPACITOR CERAMIC 0.01MF/25V B
C625	1-164-156-11	s	CAPACITOR,CERAMIC 0.1MF/25V F
C626	1-164-156-11	s	CAPACITOR,CERAMIC 0.1MF/25V F
C627	1-164-156-11	s	CAPACITOR,CERAMIC 0.1MF/25V F
C628	1-164-156-11	s	CAPACITOR,CERAMIC 0.1MF/25V F
C629	1-164-156-11	s	CAPACITOR,CERAMIC 0.1MF/25V F
C630	1-126-391-11	s	CAPACITOR ELECT 47MF/6.3V(105)
C690	1-107-826-11	s	CAPACITOR,CHIP CERAMIC 0.1MF
C691	1-162-916-11	s	CAPACITOR,CERAMIC 12PF/50V CH
C692	1-107-826-11	s	CAPACITOR,CHIP CERAMIC 0.1MF
C700	1-164-156-11	s	CAPACITOR,CERAMIC 0.1MF/25V F
C701	1-164-156-11	s	CAPACITOR,CERAMIC 0.1MF/25V F
C702	1-164-156-11	s	CAPACITOR,CERAMIC 0.1MF/25V F
C703	1-164-156-11	s	CAPACITOR,CERAMIC 0.1MF/25V F
C704	1-164-156-11	s	CAPACITOR,CERAMIC 0.1MF/25V F
C705	1-164-156-11	s	CAPACITOR,CERAMIC 0.1MF/25V F
C706	1-162-919-11	s	CAPACITOR,CERAMIC 22PF/50V CH
C707	1-162-927-11	s	CAPACITOR,CERAMIC 100PF/50V CH

(EQ-84/H BOARD [SUFFIX 12] for RECORDER)

Ref. No. or Q'ty	Part No.	SP	Description
C708	1-164-156-11	s	CAPACITOR,CERAMIC 0.1MF/25V F
C709	1-164-156-11	s	CAPACITOR,CERAMIC 0.1MF/25V F
C711	1-164-156-11	s	CAPACITOR,CERAMIC 0.1MF/25V F
C712	1-164-156-11	s	CAPACITOR,CERAMIC 0.1MF/25V F
C713	1-164-156-11	s	CAPACITOR,CERAMIC 0.1MF/25V F
C714	1-162-921-11	s	CAPACITOR,CERAMIC 33PF/50V CH
C715	1-164-156-11	s	CAPACITOR,CERAMIC 0.1MF/25V F
C716	1-162-927-11	s	CAPACITOR,CERAMIC 100PF/50V CH
C717	1-162-970-11	s	CAPACITOR CERAMIC 0.01MF/25V B
C718	1-162-970-11	s	CAPACITOR CERAMIC 0.01MF/25V B
C719	1-164-156-11	s	CAPACITOR,CERAMIC 0.1MF/25V F
C720	1-164-156-11	s	CAPACITOR,CERAMIC 0.1MF/25V F
C721	1-164-156-11	s	CAPACITOR,CERAMIC 0.1MF/25V F
C722	1-164-156-11	s	CAPACITOR,CERAMIC 0.1MF/25V F
C723	1-164-156-11	s	CAPACITOR,CERAMIC 0.1MF/25V F
C724	1-126-391-11	s	CAPACITOR ELECT 47MF/6.3V(105)
C790	1-107-826-11	s	CAPACITOR,CHIP CERAMIC 0.1MF
C791	*H 1-162-917-11	s	CAPACITOR,CERAMIC 15PF/50V CH
C792	1-107-826-11	s	CAPACITOR,CHIP CERAMIC 0.1MF
C1000	1-164-156-11	s	CAPACITOR,CERAMIC 0.1MF/25V F
C1001	1-164-156-11	s	CAPACITOR,CERAMIC 0.1MF/25V F
C1002	1-164-156-11	s	CAPACITOR,CERAMIC 0.1MF/25V F
C1003	1-164-156-11	s	CAPACITOR,CERAMIC 0.1MF/25V F
C1004	1-164-156-11	s	CAPACITOR,CERAMIC 0.1MF/25V F
C1005	1-164-156-11	s	CAPACITOR,CERAMIC 0.1MF/25V F
C1006	1-164-156-11	s	CAPACITOR,CERAMIC 0.1MF/25V F
C1007	1-164-156-11	s	CAPACITOR,CERAMIC 0.1MF/25V F
C1008	1-164-156-11	s	CAPACITOR,CERAMIC 0.1MF/25V F
C1009	1-164-156-11	s	CAPACITOR,CERAMIC 0.1MF/25V F
C1010	1-164-156-11	s	CAPACITOR,CERAMIC 0.1MF/25V F
C1011	1-164-156-11	s	CAPACITOR,CERAMIC 0.1MF/25V F
C1012	1-164-156-11	s	CAPACITOR,CERAMIC 0.1MF/25V F
C1013	1-164-156-11	s	CAPACITOR,CERAMIC 0.1MF/25V F
C1014	1-164-156-11	s	CAPACITOR,CERAMIC 0.1MF/25V F
C1015	1-164-156-11	s	CAPACITOR,CERAMIC 0.1MF/25V F
C1016	1-164-156-11	s	CAPACITOR,CERAMIC 0.1MF/25V F
C1017	1-162-970-11	s	CAPACITOR CERAMIC 0.01MF/25V B
C1018	1-162-970-11	s	CAPACITOR CERAMIC 0.01MF/25V B
C1031	1-164-156-11	s	CAPACITOR,CERAMIC 0.1MF/25V F
C1032	1-164-156-11	s	CAPACITOR,CERAMIC 0.1MF/25V F
C1033	1-164-156-11	s	CAPACITOR,CERAMIC 0.1MF/25V F
C1034	1-164-156-11	s	CAPACITOR,CERAMIC 0.1MF/25V F
C1035	1-162-970-11	s	CAPACITOR CERAMIC 0.01MF/25V B
C1036	1-164-156-11	s	CAPACITOR,CERAMIC 0.1MF/25V F
C1037	1-162-970-11	s	CAPACITOR CERAMIC 0.01MF/25V B
C1038	1-164-156-11	s	CAPACITOR,CERAMIC 0.1MF/25V F
C1039	1-164-156-11	s	CAPACITOR,CERAMIC 0.1MF/25V F
C1101	1-162-964-11	s	CAPACITOR,CERAMIC 1000PF/50V B
C1104	1-164-156-11	s	CAPACITOR,CERAMIC 0.1MF/25V F
C1105	1-164-315-11	s	CAPACITOR,CERAMIC 470PF/50V CH
C1107	1-162-964-11	s	CAPACITOR,CERAMIC 1000PF/50V B
C1109	1-164-315-11	s	CAPACITOR,CERAMIC 470PF/50V CH
C1111	1-162-964-11	s	CAPACITOR,CERAMIC 1000PF/50V B
C1114	1-164-156-11	s	CAPACITOR,CERAMIC 0.1MF/25V F
C1115	1-164-315-11	s	CAPACITOR,CERAMIC 470PF/50V CH
C1116	1-164-156-11	s	CAPACITOR,CERAMIC 0.1MF/25V F
C1117	1-164-156-11	s	CAPACITOR,CERAMIC 0.1MF/25V F
C1119	1-162-964-11	s	CAPACITOR,CERAMIC 1000PF/50V B
C1120	1-107-689-21	s	CAPACITOR,TANTALUM 1MF/35V

(EQ-84/H BOARD [SUFFIX 12] for RECORDER)

Ref. No. or Q'ty	Part No.	SP	Description
C1122	1-164-315-11	s	CAPACITOR,CERAMIC 470PF/50V CH
C1123	1-162-927-11	s	CAPACITOR,CERAMIC 100PF/50V CH
C1124	1-107-689-21	s	CAPACITOR,TANTALUM 1MF/35V
C1125	1-164-227-11	s	CAPACITOR,CERAMIC 0.022MF/25V
C1126	1-164-227-11	s	CAPACITOR,CERAMIC 0.022MF/25V
C1127	1-164-156-11	s	CAPACITOR,CERAMIC 0.1MF/25V F
C1128	1-164-156-11	s	CAPACITOR,CERAMIC 0.1MF/25V F
C1129	1-164-315-11	s	CAPACITOR,CERAMIC 470PF/50V CH
C1130	1-164-156-11	s	CAPACITOR,CERAMIC 0.1MF/25V F
C1131	1-162-915-11	s	CAPACITOR,CERAMIC 10PF/50V CH
C1132	1-162-915-11	s	CAPACITOR,CERAMIC 10PF/50V CH
C1133	1-164-156-11	s	CAPACITOR,CERAMIC 0.1MF/25V F
C1134	1-164-156-11	s	CAPACITOR,CERAMIC 0.1MF/25V F
C1135	1-164-156-11	s	CAPACITOR,CERAMIC 0.1MF/25V F
C1136	1-164-156-11	s	CAPACITOR,CERAMIC 0.1MF/25V F
C1137	1-164-156-11	s	CAPACITOR,CERAMIC 0.1MF/25V F
C1138	1-164-156-11	s	CAPACITOR,CERAMIC 0.1MF/25V F
C1139	1-164-156-11	s	CAPACITOR,CERAMIC 0.1MF/25V F
C1600	1-164-156-11	s	CAPACITOR,CERAMIC 0.1MF/25V F
C1601	1-164-156-11	s	CAPACITOR,CERAMIC 0.1MF/25V F
C1602	1-164-156-11	s	CAPACITOR,CERAMIC 0.1MF/25V F
C1603	1-164-156-11	s	CAPACITOR,CERAMIC 0.1MF/25V F
C1604	1-164-156-11	s	CAPACITOR,CERAMIC 0.1MF/25V F
C1605	1-164-156-11	s	CAPACITOR,CERAMIC 0.1MF/25V F
C1606	1-164-156-11	s	CAPACITOR,CERAMIC 0.1MF/25V F
C1607	1-162-919-11	s	CAPACITOR,CERAMIC 22PF/50V CH
C1608	1-162-927-11	s	CAPACITOR,CERAMIC 100PF/50V CH
C1609	1-164-156-11	s	CAPACITOR,CERAMIC 0.1MF/25V F
C1610	1-164-156-11	s	CAPACITOR,CERAMIC 0.1MF/25V F
C1611	1-164-156-11	s	CAPACITOR,CERAMIC 0.1MF/25V F
C1612	1-164-156-11	s	CAPACITOR,CERAMIC 0.1MF/25V F
C1613	1-164-156-11	s	CAPACITOR,CERAMIC 0.1MF/25V F
C1614	1-164-156-11	s	CAPACITOR,CERAMIC 0.1MF/25V F
C1616	1-164-156-11	s	CAPACITOR,CERAMIC 0.1MF/25V F
C1618	1-164-156-11	s	CAPACITOR,CERAMIC 0.1MF/25V F
C1620	1-164-156-11	s	CAPACITOR,CERAMIC 0.1MF/25V F
C1621	1-164-156-11	s	CAPACITOR,CERAMIC 0.1MF/25V F
C1622	1-162-921-11	s	CAPACITOR,CERAMIC 33PF/50V CH
C1623	1-164-156-11	s	CAPACITOR,CERAMIC 0.1MF/25V F
C1624	1-162-927-11	s	CAPACITOR,CERAMIC 100PF/50V CH
C1625	1-162-970-11	s	CAPACITOR CERAMIC 0.01MF/25V B
C1626	1-162-970-11	s	CAPACITOR CERAMIC 0.01MF/25V B
C1627	1-164-156-11	s	CAPACITOR,CERAMIC 0.1MF/25V F
C1628	1-164-156-11	s	CAPACITOR,CERAMIC 0.1MF/25V F
C1629	1-164-156-11	s	CAPACITOR,CERAMIC 0.1MF/25V F
C1690	1-107-826-11	s	CAPACITOR,CHIP CERAMIC 0.1MF
C1691	1-162-916-11	s	CAPACITOR,CERAMIC 12PF/50V CH
C1692	1-107-826-11	s	CAPACITOR,CHIP CERAMIC 0.1MF
C1700	1-164-156-11	s	CAPACITOR,CERAMIC 0.1MF/25V F
C1701	1-164-156-11	s	CAPACITOR,CERAMIC 0.1MF/25V F
C1702	1-164-156-11	s	CAPACITOR,CERAMIC 0.1MF/25V F
C1703	1-164-156-11	s	CAPACITOR,CERAMIC 0.1MF/25V F
C1704	1-164-156-11	s	CAPACITOR,CERAMIC 0.1MF/25V F
C1705	1-164-156-11	s	CAPACITOR,CERAMIC 0.1MF/25V F
C1706	1-162-919-11	s	CAPACITOR,CERAMIC 22PF/50V CH
C1707	1-162-927-11	s	CAPACITOR,CERAMIC 100PF/50V CH
C1708	1-164-156-11	s	CAPACITOR,CERAMIC 0.1MF/25V F
C1709	1-164-156-11	s	CAPACITOR,CERAMIC 0.1MF/25V F
C1711	1-164-156-11	s	CAPACITOR,CERAMIC 0.1MF/25V F

(EQ-84/H BOARD [SUFFIX 12] for RECORDER)

Ref. No. or Q'ty	Part No.	SP	Description
C1712	1-164-156-11	s	CAPACITOR,CERAMIC 0.1MF/25V F
C1713	1-164-156-11	s	CAPACITOR,CERAMIC 0.1MF/25V F
C1714	1-162-921-11	s	CAPACITOR,CERAMIC 33PF/50V CH
C1715	1-164-156-11	s	CAPACITOR,CERAMIC 0.1MF/25V F
C1716	1-162-927-11	s	CAPACITOR,CERAMIC 100PF/50V CH
C1717	1-162-970-11	s	CAPACITOR CERAMIC 0.01MF/25V B
C1718	1-162-970-11	s	CAPACITOR CERAMIC 0.01MF/25V B
C1719	1-164-156-11	s	CAPACITOR,CERAMIC 0.1MF/25V F
C1720	1-164-156-11	s	CAPACITOR,CERAMIC 0.1MF/25V F
C1721	1-164-156-11	s	CAPACITOR,CERAMIC 0.1MF/25V F
C1790	1-107-826-11	s	CAPACITOR,CHIP CERAMIC 0.1MF
C1791 *H	1-162-917-11	s	CAPACITOR,CERAMIC 15PF/50V CH
C1792	1-107-826-11	s	CAPACITOR,CHIP CERAMIC 0.1MF
CN100	1-580-789-21	o	PIN,CONNECTOR (SMD) 6P
CN101 *M	1-573-806-21	s	PIN,CONNECTOR (6P)(SMD)(1.5MM)
CN200 *M	1-573-806-21	s	PIN,CONNECTOR (6P)(SMD)(1.5MM)
CN600	1-691-550-11	s	PIN,CONNECTOR (3P)(SMD)(1.5MM)
CN700	1-691-550-11	s	PIN,CONNECTOR (3P)(SMD)(1.5MM)
CN1100	1-580-756-21	o	PIN, CONNECTOR 7P
CN1600	1-691-550-11	s	PIN,CONNECTOR (3P)(SMD)(1.5MM)
CN1700	1-691-550-11	s	PIN,CONNECTOR (3P)(SMD)(1.5MM)
D1030	8-719-064-52	s	DIODE CL-191YG-CD-T
D1100	8-719-941-23	s	DIODE DA204U
D1101	8-719-941-23	s	DIODE DA204U
D1102	8-719-064-52	s	DIODE CL-191YG-CD-T
D1103	8-719-064-52	s	DIODE CL-191YG-CD-T
D1104	8-719-064-52	s	DIODE CL-191YG-CD-T
F100	⚠ 1-576-270-11	s	FUSE CHIP 4A/125V (6125)
F101	⚠ 1-576-270-11	s	FUSE CHIP 4A/125V (6125)
FL300	1-781-811-11	s	FILTER, BAND PASS
FL301	1-781-812-11	s	FILTER, BAND PASS
FL302	1-781-813-11	s	FILTER, BAND PASS
FL303	1-781-814-11	s	FILTER, BAND PASS
FL304	1-781-815-11	s	FILTER, BAND PASS
FL1030	1-239-898-22	s	FILTER, EMI (SMD)
FL1031	1-239-898-22	s	FILTER, EMI (SMD)
FL1032	1-239-898-22	s	FILTER, EMI (SMD)
FL1033	1-239-898-22	s	FILTER, EMI (SMD)
FL1034	1-239-898-22	s	FILTER, EMI (SMD)
FL1035	1-239-898-22	s	FILTER, EMI (SMD)
FL1036	1-239-898-22	s	FILTER, EMI (SMD)
FL1037	1-239-898-22	s	FILTER, EMI (SMD)
FL1038	1-239-898-22	s	FILTER, EMI (SMD)
FL1039	1-239-898-22	s	FILTER, EMI (SMD)
FL1040	1-239-898-22	s	FILTER, EMI (SMD)
FL1041	1-239-898-22	s	FILTER, EMI (SMD)
FL1042	1-239-898-22	s	FILTER, EMI (SMD)
FL1043	1-239-898-22	s	FILTER, EMI (SMD)
FL1044	1-239-898-22	s	FILTER, EMI (SMD)
FL1045	1-239-898-22	s	FILTER, EMI (SMD)
FL1046	1-239-898-22	s	FILTER, EMI (SMD)
FL1047	1-239-898-22	s	FILTER, EMI (SMD)
FL1048	1-239-898-22	s	FILTER, EMI (SMD)
IC100	8-759-653-05	o	IC XC9572-15TQ100C(M)
IC101	8-759-524-27	s	IC TC74VHC244FT(EL)
IC200	8-759-639-86	s	IC SN65LVDS32DR
IC201	8-759-639-86	s	IC SN65LVDS32DR

(EQ-84/H BOARD [SUFFIX 12] for RECORDER)

Ref. No. or Q'ty	Part No.	SP	Description
IC202	8-759-523-81	s	IC TC74VHC08FT(EL)
IC203	8-759-064-36	s	IC MB88346BPFV
IC204	8-759-639-85	s	IC SN65LVDS31DR
IC206	8-759-523-94	s	IC TC74VHC32FT(EL)
IC207	8-752-093-54	s	IC CXA3513R
IC208	8-759-182-84	s	IC PQ05SZ5U
IC209	8-759-539-89	s	IC LM2990SX-5.0
IC300	8-759-669-66	s	IC TLC272CPWR
IC301	8-752-075-38	s	IC CXA3053R
IC302	8-759-294-27	s	IC LM311PS (E20)
IC600	8-752-106-24	s	IC CXA3550R
IC601	8-759-112-53	s	IC UPC1663G
IC602	8-759-182-84	s	IC PQ05SZ5U
IC700	8-752-106-24	s	IC CXA3550R
IC701	8-759-182-84	s	IC PQ05SZ5U
IC1000	8-759-640-94	o	IC CXD9096R
IC1001	8-759-392-77	s	IC SN74LVC245APW (E20)
IC1030	8-759-523-95	s	IC TC74VHC74FT(EL)
IC1031	8-759-523-94	s	IC TC74VHC32FT(EL)
IC1032	8-759-392-77	s	IC SN74LVC245APW (E20)
IC1033	8-759-392-77	s	IC SN74LVC245APW (E20)
IC1034	8-759-524-09	s	IC TC74VHC153FT (EL)
IC1035	8-759-337-40	s	IC NJM2904V(TE2)
IC1101	8-759-337-40	s	IC NJM2904V(TE2)
IC1103	8-759-337-40	s	IC NJM2904V(TE2)
IC1104	8-759-524-27	s	IC TC74VHC244FT(EL)
IC1105	8-759-491-50	s	IC TC74VHCT244AFT(EL)
IC1106	8-759-523-81	s	IC TC74VHC08FT(EL)
IC1107	8-759-523-00	s	IC TC74HC4051AFT(EL)
IC1108	8-759-491-46	s	IC TC74VHCT04AFT (EL)
IC1109	8-759-337-40	s	IC NJM2904V(TE2)
IC1110	8-759-670-06	s	IC NM24C16ULEM8X
IC1111	8-759-670-06	s	IC NM24C16ULEM8X
IC1112	8-759-523-02	s	IC TC74HC4053AFT(EL)
IC1113*H	8-759-538-30	s	IC HD64F3437TFLH16
*M	6-801-811-01	s	IC HD6433437WV32XV
IC1114	8-759-337-40	s	IC NJM2904V(TE2)
IC1115	8-759-337-40	s	IC NJM2904V(TE2)
IC1600	8-752-106-24	s	IC CXA3550R
IC1601	8-759-112-53	s	IC UPC1663G
IC1700	8-752-106-24	s	IC CXA3550R
L100	1-416-344-11	s	COIL, CHOKE 10UH
L101	1-416-344-11	s	COIL, CHOKE 10UH
L102	1-416-344-11	s	COIL, CHOKE 10UH
L103	1-416-344-11	s	COIL, CHOKE 10UH
L690	1-408-766-21	s	CHIP INDUCTOR 1.2UH (4532)
L790	1-408-766-21	s	CHIP INDUCTOR 1.2UH (4532)
L1690	1-408-766-21	s	CHIP INDUCTOR 1.2UH (4532)
L1790	1-408-766-21	s	CHIP INDUCTOR 1.2UH (4532)
Q200	8-729-140-63	s	TRANSISTOR 2SA1611-M5M6
Q201	8-729-140-63	s	TRANSISTOR 2SA1611-M5M6
Q202	8-729-029-09	s	TRANSISTOR DTC143EUA-T106
Q203	8-729-029-09	s	TRANSISTOR DTC143EUA-T106
Q300	8-729-143-13	s	TRANSISTOR 2SC4176-B34
Q301	8-729-029-14	s	TRANSISTOR DTC144EUA-T106
Q302	8-729-143-07	s	TRANSISTOR 2SA1610-Y33
Q303	8-729-143-13	s	TRANSISTOR 2SC4176-B34
Q304	8-729-143-13	s	TRANSISTOR 2SC4176-B34
Q305	8-729-029-14	s	TRANSISTOR DTC144EUA-T106

(EQ-84/H BOARD [SUFFIX 12] for RECORDER)

Ref. No. or Q'ty	Part No.	SP	Description
Q306	8-729-029-14	s	TRANSISTOR DTC144EUA-T106
Q307	8-729-143-07	s	TRANSISTOR 2SA1610-Y33
Q308	8-729-143-07	s	TRANSISTOR 2SA1610-Y33
Q309	8-729-143-13	s	TRANSISTOR 2SC4176-B34
Q310	8-729-143-13	s	TRANSISTOR 2SC4176-B34
Q311	8-729-029-14	s	TRANSISTOR DTC144EUA-T106
Q312	8-729-029-14	s	TRANSISTOR DTC144EUA-T106
Q313	8-729-143-07	s	TRANSISTOR 2SA1610-Y33
Q314	8-729-143-07	s	TRANSISTOR 2SA1610-Y33
Q600	8-729-117-32	s	TRANSISTOR 2SC4177
Q690	8-729-143-13	s	TRANSISTOR 2SC4176-B34
Q691	8-729-143-07	s	TRANSISTOR 2SA1610-Y33
Q700	8-729-029-14	s	TRANSISTOR DTC144EUA-T106
Q701	8-729-143-07	s	TRANSISTOR 2SA1610-Y33
Q702	8-729-143-07	s	TRANSISTOR 2SA1610-Y33
Q790	8-729-143-13	s	TRANSISTOR 2SC4176-B34
Q791	8-729-143-07	s	TRANSISTOR 2SA1610-Y33
Q1100	8-729-029-09	s	TRANSISTOR DTC143EUA-T106
Q1101	8-729-039-35	s	TRANSISTOR SI9435DY-T1
Q1102	8-729-029-09	s	TRANSISTOR DTC143EUA-T106
Q1103	8-729-029-09	s	TRANSISTOR DTC143EUA-T106
Q1104	8-729-029-09	s	TRANSISTOR DTC143EUA-T106
Q1105	8-729-029-09	s	TRANSISTOR DTC143EUA-T106
Q1600	8-729-117-32	s	TRANSISTOR 2SC4177
Q1690	8-729-143-13	s	TRANSISTOR 2SC4176-B34
Q1691	8-729-143-07	s	TRANSISTOR 2SA1610-Y33
Q1700	8-729-029-14	s	TRANSISTOR DTC144EUA-T106
Q1701	8-729-143-07	s	TRANSISTOR 2SA1610-Y33
Q1702	8-729-143-07	s	TRANSISTOR 2SA1610-Y33
Q1790	8-729-143-13	s	TRANSISTOR 2SC4176-B34
Q1791	8-729-143-07	s	TRANSISTOR 2SA1610-Y33
R100	1-218-716-11	s	RESISTOR,CHIP 10K 1/16W(1608)
R101	1-218-716-11	s	RESISTOR,CHIP 10K 1/16W(1608)
R102	1-218-716-11	s	RESISTOR,CHIP 10K 1/16W(1608)
R103	1-218-716-11	s	RESISTOR,CHIP 10K 1/16W(1608)
R104	1-218-716-11	s	RESISTOR,CHIP 10K 1/16W(1608)
R105	1-218-716-11	s	RESISTOR,CHIP 10K 1/16W(1608)
R106	1-218-716-11	s	RESISTOR,CHIP 10K 1/16W(1608)
R107	1-218-716-11	s	RESISTOR,CHIP 10K 1/16W(1608)
R108	1-218-716-11	s	RESISTOR,CHIP 10K 1/16W(1608)
R109	1-218-716-11	s	RESISTOR,CHIP 10K 1/16W(1608)
R110	1-218-716-11	s	RESISTOR,CHIP 10K 1/16W(1608)
R111	1-218-716-11	s	RESISTOR,CHIP 10K 1/16W(1608)
R112	1-218-692-11	s	RESISTOR,CHIP 1.0K 1/16W(1608)
R113	1-218-692-11	s	RESISTOR,CHIP 1.0K 1/16W(1608)
R114	1-218-692-11	s	RESISTOR,CHIP 1.0K 1/16W(1608)
R115	1-218-692-11	s	RESISTOR,CHIP 1.0K 1/16W(1608)
R116	1-218-692-11	s	RESISTOR,CHIP 1.0K 1/16W(1608)
R117	1-218-692-11	s	RESISTOR,CHIP 1.0K 1/16W(1608)
R118	1-218-692-11	s	RESISTOR,CHIP 1.0K 1/16W(1608)
R119	1-218-692-11	s	RESISTOR,CHIP 1.0K 1/16W(1608)
R120	1-218-692-11	s	RESISTOR,CHIP 1.0K 1/16W(1608)
R121	1-218-692-11	s	RESISTOR,CHIP 1.0K 1/16W(1608)
R122	1-218-692-11	s	RESISTOR,CHIP 1.0K 1/16W(1608)
R123	1-218-692-11	s	RESISTOR,CHIP 1.0K 1/16W(1608)
R124	1-216-864-11	s	RESISTOR,CHIP 0 1/16W (1608)
R126	1-216-864-11	s	RESISTOR,CHIP 0 1/16W (1608)
R128	1-218-716-11	s	RESISTOR,CHIP 10K 1/16W(1608)

(EQ-84/H BOARD [SUFFIX 12] for RECORDER)

Ref. No. or Q'ty	Part No.	SP	Description
R129	1-218-716-11	s	RESISTOR,CHIP 10K 1/16W(1608)
R130	1-218-716-11	s	RESISTOR,CHIP 10K 1/16W(1608)
R131	1-218-716-11	s	RESISTOR,CHIP 10K 1/16W(1608)
R132	1-218-716-11	s	RESISTOR,CHIP 10K 1/16W(1608)
R133	1-218-696-11	s	RESISTOR,CHIP 1.5K 1/16W(1608)
R134	1-218-696-11	s	RESISTOR,CHIP 1.5K 1/16W(1608)
R135	1-218-716-11	s	RESISTOR,CHIP 10K 1/16W(1608)
R136	1-218-716-11	s	RESISTOR,CHIP 10K 1/16W(1608)
R137	1-218-676-11	s	RESISTOR,CHIP 220 1/16W(1608)
R138	1-218-676-11	s	RESISTOR,CHIP 220 1/16W(1608)
R139	1-218-716-11	s	RESISTOR,CHIP 10K 1/16W(1608)
R200	1-218-668-11	s	RESISTOR,CHIP 100 1/16W (1608)
R201	1-218-668-11	s	RESISTOR,CHIP 100 1/16W (1608)
R202	1-218-668-11	s	RESISTOR,CHIP 100 1/16W (1608)
R203	1-218-668-11	s	RESISTOR,CHIP 100 1/16W (1608)
R204	1-218-668-11	s	RESISTOR,CHIP 100 1/16W (1608)
R205	1-218-668-11	s	RESISTOR,CHIP 100 1/16W (1608)
R206	1-218-716-11	s	RESISTOR,CHIP 10K 1/16W(1608)
R207	1-216-864-11	s	RESISTOR,CHIP 0 1/16W (1608)
R208	1-216-864-11	s	RESISTOR,CHIP 0 1/16W (1608)
R209	1-216-864-11	s	RESISTOR,CHIP 0 1/16W (1608)
R210	1-216-864-11	s	RESISTOR,CHIP 0 1/16W (1608)
R211	1-216-864-11	s	RESISTOR,CHIP 0 1/16W (1608)
R212	1-216-864-11	s	RESISTOR,CHIP 0 1/16W (1608)
R213	1-216-864-11	s	RESISTOR,CHIP 0 1/16W (1608)
R214	1-216-864-11	s	RESISTOR,CHIP 0 1/16W (1608)
R215	1-216-864-11	s	RESISTOR,CHIP 0 1/16W (1608)
R216	1-216-864-11	s	RESISTOR,CHIP 0 1/16W (1608)
R217	1-216-864-11	s	RESISTOR,CHIP 0 1/16W (1608)
R218	1-216-864-11	s	RESISTOR,CHIP 0 1/16W (1608)
R219	1-216-864-11	s	RESISTOR,CHIP 0 1/16W (1608)
R220	1-216-864-11	s	RESISTOR,CHIP 0 1/16W (1608)
R221	1-216-864-11	s	RESISTOR,CHIP 0 1/16W (1608)
R222	1-216-864-11	s	RESISTOR,CHIP 0 1/16W (1608)
R223	1-218-660-91	s	RESISTOR,CHIP 47 1/16W (1608)
R224	1-218-716-11	s	RESISTOR,CHIP 10K 1/16W(1608)
R225	1-218-716-11	s	RESISTOR,CHIP 10K 1/16W(1608)
R226	1-218-716-11	s	RESISTOR,CHIP 10K 1/16W(1608)
R227	1-218-716-11	s	RESISTOR,CHIP 10K 1/16W(1608)
R228	1-216-864-11	s	RESISTOR,CHIP 0 1/16W (1608)
R229	1-216-864-11	s	RESISTOR,CHIP 0 1/16W (1608)
R230	1-216-864-11	s	RESISTOR,CHIP 0 1/16W (1608)
R231	1-216-864-11	s	RESISTOR,CHIP 0 1/16W (1608)
R232	1-216-864-11	s	RESISTOR,CHIP 0 1/16W (1608)
R233	1-216-864-11	s	RESISTOR,CHIP 0 1/16W (1608)
R234	1-216-864-11	s	RESISTOR,CHIP 0 1/16W (1608)
R254	1-218-723-11	s	RESISTOR,CHIP 20K 1/16W(1608)
R255	1-218-723-11	s	RESISTOR,CHIP 20K 1/16W(1608)
R256	1-218-723-11	s	RESISTOR,CHIP 20K 1/16W(1608)
R257	1-218-723-11	s	RESISTOR,CHIP 20K 1/16W(1608)
R258	1-218-716-11	s	RESISTOR,CHIP 10K 1/16W(1608)
R259	1-218-740-11	s	RESISTOR,CHIP 100K 1/16W(1608)
R260	1-218-740-11	s	RESISTOR,CHIP 100K 1/16W(1608)
R261	1-218-716-11	s	RESISTOR,CHIP 10K 1/16W(1608)
R262	1-218-692-11	s	RESISTOR,CHIP 1.0K 1/16W(1608)
R263	1-218-692-11	s	RESISTOR,CHIP 1.0K 1/16W(1608)
R264	1-218-716-11	s	RESISTOR,CHIP 10K 1/16W(1608)
R265	1-218-716-11	s	RESISTOR,CHIP 10K 1/16W(1608)
R266	1-218-694-11	s	RESISTOR,CHIP 1.2K1/16W(1608)

(EQ-84/H BOARD [SUFFIX 12] for RECORDER)

Ref. No. or Q'ty	Part No.	SP	Description
R267	1-218-694-11	s	RESISTOR,CHIP 1.2K1/16W(1608)
R268	1-218-676-11	s	RESISTOR,CHIP 220 1/16W(1608)
R269	1-218-676-11	s	RESISTOR,CHIP 220 1/16W(1608)
R270	1-218-692-11	s	RESISTOR,CHIP 1.0K 1/16W(1608)
R271	1-218-692-11	s	RESISTOR,CHIP 1.0K 1/16W(1608)
R272	1-218-692-11	s	RESISTOR,CHIP 1.0K 1/16W(1608)
R273	1-218-680-11	s	RESISTOR,CHIP 330 1/16W(1608)
R274	1-218-680-11	s	RESISTOR,CHIP 330 1/16W(1608)
R275	1-218-672-11	s	RESISTOR,CHIP 150 1/16W(1608)
R276	1-218-672-11	s	RESISTOR,CHIP 150 1/16W(1608)
R277	1-218-699-11	s	RESISTOR,CHIP 2.0K 1/16W(1608)
R278	1-218-699-11	s	RESISTOR,CHIP 2.0K 1/16W(1608)
R279	1-216-864-11	s	RESISTOR,CHIP 0 1/16W (1608)
R280	1-218-700-11	s	RESISTOR,CHIP 2.2K 1/16W(1608)
R282	1-218-672-11	s	RESISTOR,CHIP 150 1/16W(1608)
R283	1-218-699-11	s	RESISTOR,CHIP 2.0K 1/16W(1608)
R284	1-218-699-11	s	RESISTOR,CHIP 2.0K 1/16W(1608)
R286	1-216-864-11	s	RESISTOR,CHIP 0 1/16W (1608)
R287	1-216-864-11	s	RESISTOR,CHIP 0 1/16W (1608)
R288	1-218-708-11	s	RESISTOR,CHIP 4.7K 1/16W (1608)
R293	1-218-668-11	s	RESISTOR,CHIP 100 1/16W (1608)
R294	1-218-660-91	s	RESISTOR,CHIP 47 1/16W (1608)
R295	1-218-660-91	s	RESISTOR,CHIP 47 1/16W (1608)
R296	1-218-660-91	s	RESISTOR,CHIP 47 1/16W (1608)
R297	1-218-660-91	s	RESISTOR,CHIP 47 1/16W (1608)
R298	1-218-672-11	s	RESISTOR,CHIP 150 1/16W(1608)
R299	*H 1-218-671-11	s	RESISTOR,CHIP 130 1/16W (1608)
	*M 1-218-671-11	s	RESISTOR,CHIP 130 1/16W (1608)
R300	1-218-668-11	s	RESISTOR,CHIP 100 1/16W (1608)
R301	1-218-692-11	s	RESISTOR,CHIP 1.0K 1/16W(1608)
R302	1-218-680-11	s	RESISTOR,CHIP 330 1/16W(1608)
R303	1-218-699-11	s	RESISTOR,CHIP 2.0K 1/16W(1608)
R304	1-218-699-11	s	RESISTOR,CHIP 2.0K 1/16W(1608)
R305	1-218-668-11	s	RESISTOR,CHIP 100 1/16W (1608)
R306	1-218-668-11	s	RESISTOR,CHIP 100 1/16W (1608)
R307	1-218-668-11	s	RESISTOR,CHIP 100 1/16W (1608)
R308	1-218-668-11	s	RESISTOR,CHIP 100 1/16W (1608)
R309	1-218-716-11	s	RESISTOR,CHIP 10K 1/16W(1608)
R310	1-218-692-11	s	RESISTOR,CHIP 1.0K 1/16W(1608)
R311	1-218-692-11	s	RESISTOR,CHIP 1.0K 1/16W(1608)
R312	1-218-680-11	s	RESISTOR,CHIP 330 1/16W(1608)
R313	1-218-680-11	s	RESISTOR,CHIP 330 1/16W(1608)
R314	1-218-723-11	s	RESISTOR,CHIP 20K 1/16W(1608)
R315	1-218-725-11	s	RESISTOR,CHIP 24K 1/16W(1608)
R316	1-218-699-11	s	RESISTOR,CHIP 2.0K 1/16W(1608)
R317	1-218-699-11	s	RESISTOR,CHIP 2.0K 1/16W(1608)
R318	1-218-699-11	s	RESISTOR,CHIP 2.0K 1/16W(1608)
R319	1-218-699-11	s	RESISTOR,CHIP 2.0K 1/16W(1608)
R320	1-218-699-11	s	RESISTOR,CHIP 2.0K 1/16W(1608)
R321	1-218-668-11	s	RESISTOR,CHIP 100 1/16W (1608)
R322	1-218-668-11	s	RESISTOR,CHIP 100 1/16W (1608)
R323	1-218-692-11	s	RESISTOR,CHIP 1.0K 1/16W(1608)
R324	1-218-724-11	s	RESISTOR,CHIP 22K 1/16W(1608)
R325	1-218-692-11	s	RESISTOR,CHIP 1.0K 1/16W(1608)
R326	1-218-699-11	s	RESISTOR,CHIP 2.0K 1/16W(1608)
R327	1-218-692-11	s	RESISTOR,CHIP 1.0K 1/16W(1608)
R328	1-218-699-11	s	RESISTOR,CHIP 2.0K 1/16W(1608)
R329	1-218-668-11	s	RESISTOR,CHIP 100 1/16W (1608)
R330	1-218-668-11	s	RESISTOR,CHIP 100 1/16W (1608)

(EQ-84/H BOARD [SUFFIX 12] for RECORDER)

Ref. No. or Q'ty	Part No.	SP	Description
R331	1-218-699-11	s	RESISTOR,CHIP 2.0K 1/16W(1608)
R332	1-218-692-11	s	RESISTOR,CHIP 1.0K 1/16W(1608)
R333	1-218-692-11	s	RESISTOR,CHIP 1.0K 1/16W(1608)
R334	1-218-680-11	s	RESISTOR,CHIP 330 1/16W(1608)
R335	1-218-680-11	s	RESISTOR,CHIP 330 1/16W(1608)
R336	1-218-716-11	s	RESISTOR,CHIP 10K 1/16W(1608)
R337	1-218-692-11	s	RESISTOR,CHIP 1.0K 1/16W(1608)
R338	1-218-699-11	s	RESISTOR,CHIP 2.0K 1/16W(1608)
R339	1-218-699-11	s	RESISTOR,CHIP 2.0K 1/16W(1608)
R340	1-218-699-11	s	RESISTOR,CHIP 2.0K 1/16W(1608)
R341	1-218-699-11	s	RESISTOR,CHIP 2.0K 1/16W(1608)
R342	1-218-668-11	s	RESISTOR,CHIP 100 1/16W (1608)
R343	1-218-668-11	s	RESISTOR,CHIP 100 1/16W (1608)
R344	1-218-704-11	s	RESISTOR,CHIP 3.3K 1/16W(1608)
R345	1-218-668-11	s	RESISTOR,CHIP 100 1/16W (1608)
R346	1-218-704-11	s	RESISTOR,CHIP 3.3K 1/16W(1608)
R347	1-218-668-11	s	RESISTOR,CHIP 100 1/16W (1608)
R348	1-218-668-11	s	RESISTOR,CHIP 100 1/16W (1608)
R600	1-218-644-11	s	RESISTOR,CHIP 10 1/16W
R601	1-218-644-11	s	RESISTOR,CHIP 10 1/16W
R602	1-218-723-11	s	RESISTOR,CHIP 20K 1/16W(1608)
R603	1-218-692-11	s	RESISTOR,CHIP 1.0K 1/16W(1608)
R604	1-218-692-11	s	RESISTOR,CHIP 1.0K 1/16W(1608)
R605	1-218-692-11	s	RESISTOR,CHIP 1.0K 1/16W(1608)
R606 *H	1-218-686-11	s	RESISTOR CHIP 560 1/16W (1608)
*M	1-218-686-11	s	RESISTOR CHIP 560 1/16W (1608)
R607	1-218-692-11	s	RESISTOR,CHIP 1.0K 1/16W(1608)
R608	1-218-692-11	s	RESISTOR,CHIP 1.0K 1/16W(1608)
R609	1-218-692-11	s	RESISTOR,CHIP 1.0K 1/16W(1608)
R611	1-218-704-11	s	RESISTOR,CHIP 3.3K 1/16W(1608)
R612	1-218-660-91	s	RESISTOR,CHIP 47 1/16W (1608)
R613	1-218-716-11	s	RESISTOR,CHIP 10K 1/16W(1608)
R614	1-218-716-11	s	RESISTOR,CHIP 10K 1/16W(1608)
R615	1-218-727-11	s	RESISTOR,CHIP 30K 1/16W(1608)
R616	1-218-722-11	s	RESISTOR, CHIP 18K 1/16W 1608
R621	1-218-668-11	s	RESISTOR,CHIP 100 1/16W (1608)
R622	1-218-699-11	s	RESISTOR,CHIP 2.0K 1/16W(1608)
R623	1-218-692-11	s	RESISTOR,CHIP 1.0K 1/16W(1608)
R624	1-218-724-11	s	RESISTOR,CHIP 22K 1/16W(1608)
R631	1-216-864-11	s	RESISTOR,CHIP 0 1/16W (1608)
R633	1-216-864-11	s	RESISTOR,CHIP 0 1/16W (1608)
R634	1-216-864-11	s	RESISTOR,CHIP 0 1/16W (1608)
R690	1-218-676-11	s	RESISTOR,CHIP 220 1/16W(1608)
R691	1-218-675-11	s	RESISTOR,CHIP 200 1/16W (1608)
R692	1-218-686-11	s	RESISTOR CHIP 560 1/16W (1608)
R693	1-218-692-11	s	RESISTOR,CHIP 1.0K 1/16W(1608)
R700	1-218-700-11	s	RESISTOR,CHIP 2.2K 1/16W(1608)
R701	1-218-644-11	s	RESISTOR,CHIP 10 1/16W
R702	1-218-700-11	s	RESISTOR,CHIP 2.2K 1/16W(1608)
R703	1-218-644-11	s	RESISTOR,CHIP 10 1/16W
R704	1-218-723-11	s	RESISTOR,CHIP 20K 1/16W(1608)
R705 *H	1-218-686-11	s	RESISTOR CHIP 560 1/16W (1608)
*M	1-218-686-11	s	RESISTOR CHIP 560 1/16W (1608)
R706	1-218-692-11	s	RESISTOR,CHIP 1.0K 1/16W(1608)
R707	1-218-716-11	s	RESISTOR,CHIP 10K 1/16W(1608)
R708	1-218-716-11	s	RESISTOR,CHIP 10K 1/16W(1608)
R709	1-218-727-11	s	RESISTOR,CHIP 30K 1/16W(1608)
R710	1-218-722-11	s	RESISTOR, CHIP 18K 1/16W 1608
R715	1-218-668-11	s	RESISTOR,CHIP 100 1/16W (1608)

(EQ-84/H BOARD [SUFFIX 12] for RECORDER)

Ref. No. or Q'ty	Part No.	SP	Description
R716	1-218-699-11	s	RESISTOR,CHIP 2.0K 1/16W(1608)
R717	1-218-692-11	s	RESISTOR,CHIP 1.0K 1/16W(1608)
R718	1-218-724-11	s	RESISTOR,CHIP 22K 1/16W(1608)
R725	1-216-864-11	s	RESISTOR,CHIP 0 1/16W (1608)
R727	1-218-660-91	s	RESISTOR,CHIP 47 1/16W (1608)
R728	1-218-660-91	s	RESISTOR,CHIP 47 1/16W (1608)
R790	1-218-676-11	s	RESISTOR,CHIP 220 1/16W(1608)
R791	1-218-675-11	s	RESISTOR,CHIP 200 1/16W (1608)
R792	1-218-686-11	s	RESISTOR CHIP 560 1/16W (1608)
R793	1-218-692-11	s	RESISTOR,CHIP 1.0K 1/16W(1608)
R1000	1-218-732-11	s	RESISTOR,CHIP 47K 1/16W(1608)
R1001	1-218-732-11	s	RESISTOR,CHIP 47K 1/16W(1608)
R1002	1-218-728-11	s	RESISTOR,CHIP 33K 1/16W
R1003	1-218-728-11	s	RESISTOR,CHIP 33K 1/16W
R1004	1-218-668-11	s	RESISTOR,CHIP 100 1/16W (1608)
R1005	1-216-864-11	s	RESISTOR,CHIP 0 1/16W (1608)
R1006	1-218-692-11	s	RESISTOR,CHIP 1.0K 1/16W(1608)
R1030	1-218-740-11	s	RESISTOR,CHIP 100K 1/16W(1608)
R1031	1-218-676-11	s	RESISTOR,CHIP 220 1/16W(1608)
R1032	1-218-740-11	s	RESISTOR,CHIP 100K 1/16W(1608)
R1033	1-218-740-11	s	RESISTOR,CHIP 100K 1/16W(1608)
R1034	1-218-692-11	s	RESISTOR,CHIP 1.0K 1/16W(1608)
R1035	1-218-692-11	s	RESISTOR,CHIP 1.0K 1/16W(1608)
R1036	1-218-660-91	s	RESISTOR,CHIP 47 1/16W (1608)
R1037	1-218-680-11	s	RESISTOR,CHIP 330 1/16W(1608)
R1038	1-218-674-11	s	RESISTOR CHIP 180 1/16W (1608)
R1039	1-218-692-11	s	RESISTOR,CHIP 1.0K 1/16W(1608)
R1040	1-218-680-11	s	RESISTOR,CHIP 330 1/16W(1608)
R1041	1-216-864-11	s	RESISTOR,CHIP 0 1/16W (1608)
R1042	1-216-864-11	s	RESISTOR,CHIP 0 1/16W (1608)
R1043	1-216-864-11	s	RESISTOR,CHIP 0 1/16W (1608)
R1044	1-216-864-11	s	RESISTOR,CHIP 0 1/16W (1608)
R1045	1-216-864-11	s	RESISTOR,CHIP 0 1/16W (1608)
R1046	1-216-864-11	s	RESISTOR,CHIP 0 1/16W (1608)
R1047	1-216-864-11	s	RESISTOR,CHIP 0 1/16W (1608)
R1048	1-216-864-11	s	RESISTOR,CHIP 0 1/16W (1608)
R1049	1-216-864-11	s	RESISTOR,CHIP 0 1/16W (1608)
R1050	1-216-864-11	s	RESISTOR,CHIP 0 1/16W (1608)
R1051	1-216-864-11	s	RESISTOR,CHIP 0 1/16W (1608)
R1052	1-216-864-11	s	RESISTOR,CHIP 0 1/16W (1608)
R1053	1-216-864-11	s	RESISTOR,CHIP 0 1/16W (1608)
R1054	1-218-727-11	s	RESISTOR,CHIP 30K 1/16W(1608)
R1055	1-218-727-11	s	RESISTOR,CHIP 30K 1/16W(1608)
R1056	1-218-727-11	s	RESISTOR,CHIP 30K 1/16W(1608)
R1057	1-218-727-11	s	RESISTOR,CHIP 30K 1/16W(1608)
R1101	1-218-728-11	s	RESISTOR,CHIP 33K 1/16W
R1103	1-218-732-11	s	RESISTOR,CHIP 47K 1/16W(1608)
R1105	1-218-728-11	s	RESISTOR,CHIP 33K 1/16W
R1107	1-218-732-11	s	RESISTOR,CHIP 47K 1/16W(1608)
R1109	1-218-728-11	s	RESISTOR,CHIP 33K 1/16W
R1111	1-218-732-11	s	RESISTOR,CHIP 47K 1/16W(1608)
R1112	1-218-732-11	s	RESISTOR,CHIP 47K 1/16W(1608)
R1113	1-218-740-11	s	RESISTOR,CHIP 100K 1/16W(1608)
R1114	1-218-740-11	s	RESISTOR,CHIP 100K 1/16W(1608)
R1115	1-218-740-11	s	RESISTOR,CHIP 100K 1/16W(1608)
R1116	1-218-740-11	s	RESISTOR,CHIP 100K 1/16W(1608)
R1118	1-218-728-11	s	RESISTOR,CHIP 33K 1/16W
R1119	1-218-740-11	s	RESISTOR,CHIP 100K 1/16W(1608)
R1120	1-218-740-11	s	RESISTOR,CHIP 100K 1/16W(1608)

(EQ-84/H BOARD [SUFFIX 12] for RECORDER)

Ref. No. or Q'ty	Part No.	SP	Description
R1121	1-218-740-11	s	RESISTOR,CHIP 100K 1/16W(1608)
R1122	1-218-668-11	s	RESISTOR,CHIP 100 1/16W (1608)
R1123	1-218-668-11	s	RESISTOR,CHIP 100 1/16W (1608)
R1124	1-218-668-11	s	RESISTOR,CHIP 100 1/16W (1608)
R1125	1-218-668-11	s	RESISTOR,CHIP 100 1/16W (1608)
R1126	1-218-668-11	s	RESISTOR,CHIP 100 1/16W (1608)
R1127	1-218-668-11	s	RESISTOR,CHIP 100 1/16W (1608)
R1128	1-218-668-11	s	RESISTOR,CHIP 100 1/16W (1608)
R1129	1-218-668-11	s	RESISTOR,CHIP 100 1/16W (1608)
R1130	1-218-692-11	s	RESISTOR,CHIP 1.0K 1/16W(1608)
R1131	1-218-716-11	s	RESISTOR,CHIP 10K 1/16W(1608)
R1133	1-218-732-11	s	RESISTOR,CHIP 47K 1/16W(1608)
R1134	1-218-716-11	s	RESISTOR,CHIP 10K 1/16W(1608)
R1135	1-218-740-11	s	RESISTOR,CHIP 100K 1/16W(1608)
R1136	1-218-716-11	s	RESISTOR,CHIP 10K 1/16W(1608)
R1137	1-218-740-11	s	RESISTOR,CHIP 100K 1/16W(1608)
R1138	1-218-716-11	s	RESISTOR,CHIP 10K 1/16W(1608)
R1141	1-216-864-11	s	RESISTOR,CHIP 0 1/16W (1608)
R1142	1-216-864-11	s	RESISTOR,CHIP 0 1/16W (1608)
R1143	1-218-692-11	s	RESISTOR,CHIP 1.0K 1/16W(1608)
R1144	1-218-692-11	s	RESISTOR,CHIP 1.0K 1/16W(1608)
R1145	1-218-692-11	s	RESISTOR,CHIP 1.0K 1/16W(1608)
R1146	1-218-692-11	s	RESISTOR,CHIP 1.0K 1/16W(1608)
R1147	1-218-692-11	s	RESISTOR,CHIP 1.0K 1/16W(1608)
R1148	1-218-716-11	s	RESISTOR,CHIP 10K 1/16W(1608)
R1149	1-218-716-11	s	RESISTOR,CHIP 10K 1/16W(1608)
R1150	1-218-716-11	s	RESISTOR,CHIP 10K 1/16W(1608)
R1151	1-218-740-11	s	RESISTOR,CHIP 100K 1/16W(1608)
R1152	1-218-716-11	s	RESISTOR,CHIP 10K 1/16W(1608)
R1153	1-218-740-11	s	RESISTOR,CHIP 100K 1/16W(1608)
R1154	1-218-740-11	s	RESISTOR,CHIP 100K 1/16W(1608)
R1155	1-218-740-11	s	RESISTOR,CHIP 100K 1/16W(1608)
R1159	1-218-680-11	s	RESISTOR,CHIP 330 1/16W(1608)
R1160	1-218-680-11	s	RESISTOR,CHIP 330 1/16W(1608)
R1161	1-218-668-11	s	RESISTOR,CHIP 100 1/16W (1608)
R1162	1-218-692-11	s	RESISTOR,CHIP 1.0K 1/16W(1608)
R1163	1-218-692-11	s	RESISTOR,CHIP 1.0K 1/16W(1608)
R1164	1-218-716-11	s	RESISTOR,CHIP 10K 1/16W(1608)
R1165	1-218-680-11	s	RESISTOR,CHIP 330 1/16W(1608)
R1166	1-218-732-11	s	RESISTOR,CHIP 47K 1/16W(1608)
R1167	1-218-668-11	s	RESISTOR,CHIP 100 1/16W (1608)
R1168	1-218-668-11	s	RESISTOR,CHIP 100 1/16W (1608)
R1169	1-218-668-11	s	RESISTOR,CHIP 100 1/16W (1608)
R1170	1-218-668-11	s	RESISTOR,CHIP 100 1/16W (1608)
R1171	1-218-724-11	s	RESISTOR,CHIP 22K 1/16W(1608)
R1172	1-218-724-11	s	RESISTOR,CHIP 22K 1/16W(1608)
R1173	1-218-724-11	s	RESISTOR,CHIP 22K 1/16W(1608)
R1174	1-218-724-11	s	RESISTOR,CHIP 22K 1/16W(1608)
R1175	1-218-728-11	s	RESISTOR,CHIP 33K 1/16W
R1176	1-218-728-11	s	RESISTOR,CHIP 33K 1/16W
R1177	1-218-728-11	s	RESISTOR,CHIP 33K 1/16W
R1178	1-218-728-11	s	RESISTOR,CHIP 33K 1/16W
R1600	1-218-644-11	s	RESISTOR,CHIP 10 1/16W
R1601	1-218-644-11	s	RESISTOR,CHIP 10 1/16W
R1602	1-218-723-11	s	RESISTOR,CHIP 20K 1/16W(1608)
R1603	1-218-692-11	s	RESISTOR,CHIP 1.0K 1/16W(1608)
R1604	1-218-692-11	s	RESISTOR,CHIP 1.0K 1/16W(1608)
R1605	1-218-692-11	s	RESISTOR,CHIP 1.0K 1/16W(1608)
R1606 *H	1-218-686-11	s	RESISTOR CHIP 560 1/16W (1608)
*M	1-218-686-11	s	RESISTOR CHIP 560 1/16W (1608)

(EQ-84/H BOARD [SUFFIX 12] for RECORDER)

Ref. No. or Q'ty	Part No.	SP	Description
R1607	1-218-692-11	s	RESISTOR,CHIP 1.0K 1/16W(1608)
R1608	1-218-692-11	s	RESISTOR,CHIP 1.0K 1/16W(1608)
R1609	1-218-692-11	s	RESISTOR,CHIP 1.0K 1/16W(1608)
R1611	1-218-704-11	s	RESISTOR,CHIP 3.3K 1/16W(1608)
R1612	1-218-716-11	s	RESISTOR,CHIP 10K 1/16W(1608)
R1613	1-218-660-91	s	RESISTOR,CHIP 47 1/16W (1608)
R1614	1-218-660-91	s	RESISTOR,CHIP 47 1/16W (1608)
R1615	1-218-716-11	s	RESISTOR,CHIP 10K 1/16W(1608)
R1616	1-218-727-11	s	RESISTOR,CHIP 30K 1/16W(1608)
R1617	1-218-722-11	s	RESISTOR, CHIP 18K 1/16W 1608
R1622	1-218-668-11	s	RESISTOR,CHIP 100 1/16W (1608)
R1623	1-218-699-11	s	RESISTOR,CHIP 2.0K 1/16W(1608)
R1624	1-218-692-11	s	RESISTOR,CHIP 1.0K 1/16W(1608)
R1625	1-218-724-11	s	RESISTOR,CHIP 22K 1/16W(1608)
R1632	1-216-864-11	s	RESISTOR,CHIP 0 1/16W (1608)
R1634	1-216-864-11	s	RESISTOR,CHIP 0 1/16W (1608)
R1635	1-216-864-11	s	RESISTOR,CHIP 0 1/16W (1608)
R1690	1-218-676-11	s	RESISTOR,CHIP 220 1/16W(1608)
R1691	1-218-675-11	s	RESISTOR,CHIP 200 1/16W (1608)
R1692	1-218-686-11	s	RESISTOR CHIP 560 1/16W (1608)
R1693	1-218-692-11	s	RESISTOR,CHIP 1.0K 1/16W(1608)
R1700	1-218-700-11	s	RESISTOR,CHIP 2.2K 1/16W(1608)
R1701	1-218-644-11	s	RESISTOR,CHIP 10 1/16W
R1702	1-218-700-11	s	RESISTOR,CHIP 2.2K 1/16W(1608)
R1703	1-218-644-11	s	RESISTOR,CHIP 10 1/16W
R1704	1-218-723-11	s	RESISTOR,CHIP 20K 1/16W(1608)
R1705 *H	1-218-686-11	s	RESISTOR CHIP 560 1/16W (1608)
*M	1-218-686-11	s	RESISTOR CHIP 560 1/16W (1608)
R1706	1-218-692-11	s	RESISTOR,CHIP 1.0K 1/16W(1608)
R1707	1-218-716-11	s	RESISTOR,CHIP 10K 1/16W(1608)
R1708	1-218-716-11	s	RESISTOR,CHIP 10K 1/16W(1608)
R1709	1-218-727-11	s	RESISTOR,CHIP 30K 1/16W(1608)
R1710	1-218-722-11	s	RESISTOR, CHIP 18K 1/16W 1608
R1715	1-218-668-11	s	RESISTOR,CHIP 100 1/16W (1608)
R1716	1-218-699-11	s	RESISTOR,CHIP 2.0K 1/16W(1608)
R1717	1-218-692-11	s	RESISTOR,CHIP 1.0K 1/16W(1608)
R1718	1-218-724-11	s	RESISTOR,CHIP 22K 1/16W(1608)
R1725	1-216-864-11	s	RESISTOR,CHIP 0 1/16W (1608)
R1727	1-218-660-91	s	RESISTOR,CHIP 47 1/16W (1608)
R1728	1-218-660-91	s	RESISTOR,CHIP 47 1/16W (1608)
R1790	1-218-676-11	s	RESISTOR,CHIP 220 1/16W(1608)
R1791	1-218-675-11	s	RESISTOR,CHIP 200 1/16W (1608)
R1792	1-218-686-11	s	RESISTOR CHIP 560 1/16W (1608)
R1793	1-218-692-11	s	RESISTOR,CHIP 1.0K 1/16W(1608)
S200	1-692-881-41	s	SWITCH, SLIDE
S201	1-692-881-41	s	SWITCH, SLIDE
S1100	1-572-473-11	s	SWITCH, TACTIL

EQ-84/H BOARD [SUFFIX 13-] for RECORDER

*H: [Lot No. 391 -] HDW-2000, M2000/P
[Lot No. 4C2 -] HDW-D2000
[Lot No. 462 -] HDW-S2000/P
[Lot No. 391 -] MSW-2000
*M: [Lot No. 434 -] DVW-2000/P, M2000/P
[Lot No. 391 -] MSW-M2000/P, A2000/P
[Lot No. 495 -] MSW-M2000E/P

Ref. No. or Q'ty	Part No.	SP	Description
1pc	*H A-8327-515-C	s	MOUNTED CIRCUIT BOARD, EQ-84H
	*M A-8324-888-C	s	MOUNTED CIRCUIT BOARD, EQ-84
2pcs	*H 4-352-844-01	s	PIN, LEAD, COATING
1pc	3-179-084-11	s	LEVER(R),PRINTED C,BOARD
C100	1-107-826-11	s	CAPACITOR,CHIP CERAMIC 0.1MF
C101	1-107-826-11	s	CAPACITOR,CHIP CERAMIC 0.1MF
C102	1-131-661-11	s	CAPACITOR,ELECT 100MF/10V CHIP
C103	1-131-661-11	s	CAPACITOR,ELECT 100MF/10V CHIP
C104	1-131-661-11	s	CAPACITOR,ELECT 100MF/10V CHIP
C105	1-131-661-11	s	CAPACITOR,ELECT 100MF/10V CHIP
C106	1-107-826-11	s	CAPACITOR,CHIP CERAMIC 0.1MF
C107	1-107-826-11	s	CAPACITOR,CHIP CERAMIC 0.1MF
C108	1-107-826-11	s	CAPACITOR,CHIP CERAMIC 0.1MF
C109	1-107-826-11	s	CAPACITOR,CHIP CERAMIC 0.1MF
C110	1-107-826-11	s	CAPACITOR,CHIP CERAMIC 0.1MF
C200	1-107-826-11	s	CAPACITOR,CHIP CERAMIC 0.1MF
C201	1-162-915-11	s	CAPACITOR,CERAMIC 10PF/50V CH
C202	1-162-915-11	s	CAPACITOR,CERAMIC 10PF/50V CH
C203	1-164-315-11	s	CAPACITOR,CERAMIC 470PF/50V CH
C205	1-164-315-11	s	CAPACITOR,CERAMIC 470PF/50V CH
C206	1-164-315-11	s	CAPACITOR,CERAMIC 470PF/50V CH
C207	1-164-315-11	s	CAPACITOR,CERAMIC 470PF/50V CH
C209	1-107-826-11	s	CAPACITOR,CHIP CERAMIC 0.1MF
C210	1-107-826-11	s	CAPACITOR,CHIP CERAMIC 0.1MF
C211	1-107-826-11	s	CAPACITOR,CHIP CERAMIC 0.1MF
C213	1-107-826-11	s	CAPACITOR,CHIP CERAMIC 0.1MF
C214	1-107-826-11	s	CAPACITOR,CHIP CERAMIC 0.1MF
C215	1-107-826-11	s	CAPACITOR,CHIP CERAMIC 0.1MF
C216	1-107-826-11	s	CAPACITOR,CHIP CERAMIC 0.1MF
C217	1-107-826-11	s	CAPACITOR,CHIP CERAMIC 0.1MF
C218	1-107-826-11	s	CAPACITOR,CHIP CERAMIC 0.1MF
C219	1-100-276-21	s	CAP, ELECT 22MF (5.0X6.5)
C220	1-100-276-21	s	CAP, ELECT 22MF (5.0X6.5)
C221	1-107-826-11	s	CAPACITOR,CHIP CERAMIC 0.1MF
C222	1-107-826-11	s	CAPACITOR,CHIP CERAMIC 0.1MF
C223	1-107-826-11	s	CAPACITOR,CHIP CERAMIC 0.1MF
C224	1-107-826-11	s	CAPACITOR,CHIP CERAMIC 0.1MF
C225	1-107-826-11	s	CAPACITOR,CHIP CERAMIC 0.1MF
C226	1-107-826-11	s	CAPACITOR,CHIP CERAMIC 0.1MF
C227	1-162-970-11	s	CAPACITOR CERAMIC 0.01MF/25V B
C300	1-107-826-11	s	CAPACITOR,CHIP CERAMIC 0.1MF
C301	1-107-826-11	s	CAPACITOR,CHIP CERAMIC 0.1MF
C302	1-107-826-11	s	CAPACITOR,CHIP CERAMIC 0.1MF
C303	1-107-826-11	s	CAPACITOR,CHIP CERAMIC 0.1MF
C304	1-107-826-11	s	CAPACITOR,CHIP CERAMIC 0.1MF
C305	1-107-826-11	s	CAPACITOR,CHIP CERAMIC 0.1MF
C306	1-107-826-11	s	CAPACITOR,CHIP CERAMIC 0.1MF
C307	1-107-826-11	s	CAPACITOR,CHIP CERAMIC 0.1MF
C308	1-107-826-11	s	CAPACITOR,CHIP CERAMIC 0.1MF
C309	1-115-416-11	s	CAPACITOR,CERAMIC 1000PF/25V
C310	1-107-826-11	s	CAPACITOR,CHIP CERAMIC 0.1MF
C311	1-162-923-11	s	CAPACITOR,CERAMIC 47PF/50V CH
C312	1-107-826-11	s	CAPACITOR,CHIP CERAMIC 0.1MF
C313	1-107-826-11	s	CAPACITOR,CHIP CERAMIC 0.1MF

(EQ-84/H BOARD [SUFFIX 13-] for RECORDER)

Ref. No. or Q'ty	Part No.	SP	Description
C314	1-107-826-11	s	CAPACITOR,CHIP CERAMIC 0.1MF
C315	1-107-826-11	s	CAPACITOR,CHIP CERAMIC 0.1MF
C316	1-107-826-11	s	CAPACITOR,CHIP CERAMIC 0.1MF
C317	1-107-826-11	s	CAPACITOR,CHIP CERAMIC 0.1MF
C318	1-107-826-11	s	CAPACITOR,CHIP CERAMIC 0.1MF
C319	1-107-826-11	s	CAPACITOR,CHIP CERAMIC 0.1MF
C320	1-107-826-11	s	CAPACITOR,CHIP CERAMIC 0.1MF
C321	1-164-388-91	s	CAPACITOR,CERAMIC 270PF/50V CH
C322	1-164-388-91	s	CAPACITOR,CERAMIC 270PF/50V CH
C323	1-162-928-11	s	CAPACITOR,CERAMIC 120PF/50V CH
C324	1-107-826-11	s	CAPACITOR,CHIP CERAMIC 0.1MF
C325	1-107-826-11	s	CAPACITOR,CHIP CERAMIC 0.1MF
C326	1-107-826-11	s	CAPACITOR,CHIP CERAMIC 0.1MF
C327	1-107-826-11	s	CAPACITOR,CHIP CERAMIC 0.1MF
C328	1-107-826-11	s	CAPACITOR,CHIP CERAMIC 0.1MF
C329	1-107-826-11	s	CAPACITOR,CHIP CERAMIC 0.1MF
C330	1-107-826-11	s	CAPACITOR,CHIP CERAMIC 0.1MF
C331	1-107-826-11	s	CAPACITOR,CHIP CERAMIC 0.1MF
C332	1-107-826-11	s	CAPACITOR,CHIP CERAMIC 0.1MF
C333	1-107-826-11	s	CAPACITOR,CHIP CERAMIC 0.1MF
C334	1-107-826-11	s	CAPACITOR,CHIP CERAMIC 0.1MF
C600	1-107-826-11	s	CAPACITOR,CHIP CERAMIC 0.1MF
C601	1-107-826-11	s	CAPACITOR,CHIP CERAMIC 0.1MF
C602	1-107-826-11	s	CAPACITOR,CHIP CERAMIC 0.1MF
C603	1-107-826-11	s	CAPACITOR,CHIP CERAMIC 0.1MF
C604	1-107-826-11	s	CAPACITOR,CHIP CERAMIC 0.1MF
C605	1-107-826-11	s	CAPACITOR,CHIP CERAMIC 0.1MF
C606	1-107-826-11	s	CAPACITOR,CHIP CERAMIC 0.1MF
C607	1-162-919-11	s	CAPACITOR,CERAMIC 22PF/50V CH
C608	1-162-927-11	s	CAPACITOR,CERAMIC 100PF/50V CH
C609	1-107-826-11	s	CAPACITOR,CHIP CERAMIC 0.1MF
C610	1-162-970-11	s	CAPACITOR CERAMIC 0.01MF/25V B
C611	1-162-970-11	s	CAPACITOR CERAMIC 0.01MF/25V B
C612	1-107-826-11	s	CAPACITOR,CHIP CERAMIC 0.1MF
C613	1-107-826-11	s	CAPACITOR,CHIP CERAMIC 0.1MF
C616	1-107-826-11	s	CAPACITOR,CHIP CERAMIC 0.1MF
C618	1-107-826-11	s	CAPACITOR,CHIP CERAMIC 0.1MF
C619	1-107-826-11	s	CAPACITOR,CHIP CERAMIC 0.1MF
C620	1-162-921-11	s	CAPACITOR,CERAMIC 33PF/50V CH
C621	1-107-826-11	s	CAPACITOR,CHIP CERAMIC 0.1MF
C622	1-162-927-11	s	CAPACITOR,CERAMIC 100PF/50V CH
C623	1-162-970-11	s	CAPACITOR CERAMIC 0.01MF/25V B
C624	1-162-970-11	s	CAPACITOR CERAMIC 0.01MF/25V B
C625	1-107-826-11	s	CAPACITOR,CHIP CERAMIC 0.1MF
C626	1-107-826-11	s	CAPACITOR,CHIP CERAMIC 0.1MF
C627	1-107-826-11	s	CAPACITOR,CHIP CERAMIC 0.1MF
C628	1-107-826-11	s	CAPACITOR,CHIP CERAMIC 0.1MF
C629	1-107-826-11	s	CAPACITOR,CHIP CERAMIC 0.1MF
C630	1-100-276-21	s	CAP, ELECT 22MF (5.0X6.5)
C690	1-107-826-11	s	CAPACITOR,CHIP CERAMIC 0.1MF
C691	1-162-916-11	s	CAPACITOR,CERAMIC 12PF/50V CH
C692	1-107-826-11	s	CAPACITOR,CHIP CERAMIC 0.1MF
C700	1-107-826-11	s	CAPACITOR,CHIP CERAMIC 0.1MF
C701	1-107-826-11	s	CAPACITOR,CHIP CERAMIC 0.1MF
C702	1-107-826-11	s	CAPACITOR,CHIP CERAMIC 0.1MF
C703	1-107-826-11	s	CAPACITOR,CHIP CERAMIC 0.1MF
C704	1-107-826-11	s	CAPACITOR,CHIP CERAMIC 0.1MF
C705	1-107-826-11	s	CAPACITOR,CHIP CERAMIC 0.1MF
C706	1-162-919-11	s	CAPACITOR,CERAMIC 22PF/50V CH

(EQ-84/H BOARD [SUFFIX 13-] for RECORDER)

Ref. No. or Q'ty	Part No.	SP	Description
C707	1-162-927-11	s	CAPACITOR,CERAMIC 100PF/50V CH
C708	1-107-826-11	s	CAPACITOR,CHIP CERAMIC 0.1MF
C709	1-107-826-11	s	CAPACITOR,CHIP CERAMIC 0.1MF
C711	1-107-826-11	s	CAPACITOR,CHIP CERAMIC 0.1MF
C712	1-107-826-11	s	CAPACITOR,CHIP CERAMIC 0.1MF
C713	1-107-826-11	s	CAPACITOR,CHIP CERAMIC 0.1MF
C714	1-162-921-11	s	CAPACITOR,CERAMIC 33PF/50V CH
C715	1-107-826-11	s	CAPACITOR,CHIP CERAMIC 0.1MF
C716	1-162-927-11	s	CAPACITOR,CERAMIC 100PF/50V CH
C717	1-162-970-11	s	CAPACITOR CERAMIC 0.01MF/25V B
C718	1-162-970-11	s	CAPACITOR CERAMIC 0.01MF/25V B
C719	1-107-826-11	s	CAPACITOR,CHIP CERAMIC 0.1MF
C720	1-107-826-11	s	CAPACITOR,CHIP CERAMIC 0.1MF
C721	1-107-826-11	s	CAPACITOR,CHIP CERAMIC 0.1MF
C722	1-107-826-11	s	CAPACITOR,CHIP CERAMIC 0.1MF
C723	1-107-826-11	s	CAPACITOR,CHIP CERAMIC 0.1MF
C724	1-100-276-21	s	CAP, ELECT 22MF (5.0X6.5)
C790	1-107-826-11	s	CAPACITOR,CHIP CERAMIC 0.1MF
C791 *H	1-164-813-11	s	CAPACITOR,CERAMIC 15PF/50V CH
*M	1-162-916-11	s	CAPACITOR,CERAMIC 12PF/50V CH
C792	1-107-826-11	s	CAPACITOR,CHIP CERAMIC 0.1MF
C1000	1-107-826-11	s	CAPACITOR,CHIP CERAMIC 0.1MF
C1001	1-107-826-11	s	CAPACITOR,CHIP CERAMIC 0.1MF
C1002	1-107-826-11	s	CAPACITOR,CHIP CERAMIC 0.1MF
C1003	1-107-826-11	s	CAPACITOR,CHIP CERAMIC 0.1MF
C1004	1-107-826-11	s	CAPACITOR,CHIP CERAMIC 0.1MF
C1005	1-107-826-11	s	CAPACITOR,CHIP CERAMIC 0.1MF
C1006	1-107-826-11	s	CAPACITOR,CHIP CERAMIC 0.1MF
C1007	1-107-826-11	s	CAPACITOR,CHIP CERAMIC 0.1MF
C1008	1-107-826-11	s	CAPACITOR,CHIP CERAMIC 0.1MF
C1009	1-107-826-11	s	CAPACITOR,CHIP CERAMIC 0.1MF
C1010	1-107-826-11	s	CAPACITOR,CHIP CERAMIC 0.1MF
C1011	1-107-826-11	s	CAPACITOR,CHIP CERAMIC 0.1MF
C1012	1-107-826-11	s	CAPACITOR,CHIP CERAMIC 0.1MF
C1013	1-107-826-11	s	CAPACITOR,CHIP CERAMIC 0.1MF
C1014	1-107-826-11	s	CAPACITOR,CHIP CERAMIC 0.1MF
C1015	1-107-826-11	s	CAPACITOR,CHIP CERAMIC 0.1MF
C1016	1-107-826-11	s	CAPACITOR,CHIP CERAMIC 0.1MF
C1017	1-162-970-11	s	CAPACITOR CERAMIC 0.01MF/25V B
C1018	1-162-970-11	s	CAPACITOR CERAMIC 0.01MF/25V B
C1031	1-107-826-11	s	CAPACITOR,CHIP CERAMIC 0.1MF
C1032	1-107-826-11	s	CAPACITOR,CHIP CERAMIC 0.1MF
C1033	1-107-826-11	s	CAPACITOR,CHIP CERAMIC 0.1MF
C1034	1-107-826-11	s	CAPACITOR,CHIP CERAMIC 0.1MF
C1035	1-162-970-11	s	CAPACITOR CERAMIC 0.01MF/25V B
C1036	1-107-826-11	s	CAPACITOR,CHIP CERAMIC 0.1MF
C1037	1-162-970-11	s	CAPACITOR CERAMIC 0.01MF/25V B
C1038	1-107-826-11	s	CAPACITOR,CHIP CERAMIC 0.1MF
C1039	1-107-826-11	s	CAPACITOR,CHIP CERAMIC 0.1MF
C1101	1-115-416-11	s	CAPACITOR,CERAMIC 1000PF/25V
C1104	1-107-826-11	s	CAPACITOR,CHIP CERAMIC 0.1MF
C1105	1-164-315-11	s	CAPACITOR,CERAMIC 470PF/50V CH
C1107	1-115-416-11	s	CAPACITOR,CERAMIC 1000PF/25V
C1109	1-164-315-11	s	CAPACITOR,CERAMIC 470PF/50V CH
C1111	1-115-416-11	s	CAPACITOR,CERAMIC 1000PF/25V
C1114	1-107-826-11	s	CAPACITOR,CHIP CERAMIC 0.1MF
C1115	1-164-315-11	s	CAPACITOR,CERAMIC 470PF/50V CH
C1119	1-115-416-11	s	CAPACITOR,CERAMIC 1000PF/25V
C1120	1-125-827-11	s	CAPACITOR,CERAMIC 1MF/25V

(EQ-84/H BOARD [SUFFIX 13-] for RECORDER)

Ref. No. or Q'ty	Part No.	SP	Description
C1122	1-164-315-11	s	CAPACITOR,CERAMIC 470PF/50V CH
C1123	1-162-927-11	s	CAPACITOR,CERAMIC 100PF/50V CH
C1124	1-125-827-11	s	CAPACITOR,CERAMIC 1MF/25V
C1125	1-164-227-11	s	CAPACITOR,CERAMIC 0.022MF/25V
C1126	1-164-227-11	s	CAPACITOR,CERAMIC 0.022MF/25V
C1127	1-107-826-11	s	CAPACITOR,CHIP CERAMIC 0.1MF
C1128	1-107-826-11	s	CAPACITOR,CHIP CERAMIC 0.1MF
C1129	1-164-315-11	s	CAPACITOR,CERAMIC 470PF/50V CH
C1130	1-107-826-11	s	CAPACITOR,CHIP CERAMIC 0.1MF
C1131	1-162-915-11	s	CAPACITOR,CERAMIC 10PF/50V CH
C1132	1-162-915-11	s	CAPACITOR,CERAMIC 10PF/50V CH
C1133	1-107-826-11	s	CAPACITOR,CHIP CERAMIC 0.1MF
C1134	1-107-826-11	s	CAPACITOR,CHIP CERAMIC 0.1MF
C1135	1-107-826-11	s	CAPACITOR,CHIP CERAMIC 0.1MF
C1136	1-107-826-11	s	CAPACITOR,CHIP CERAMIC 0.1MF
C1137	1-107-826-11	s	CAPACITOR,CHIP CERAMIC 0.1MF
C1138	1-107-826-11	s	CAPACITOR,CHIP CERAMIC 0.1MF
C1139	1-107-826-11	s	CAPACITOR,CHIP CERAMIC 0.1MF
C1600	1-107-826-11	s	CAPACITOR,CHIP CERAMIC 0.1MF
C1601	1-107-826-11	s	CAPACITOR,CHIP CERAMIC 0.1MF
C1602	1-107-826-11	s	CAPACITOR,CHIP CERAMIC 0.1MF
C1603	1-107-826-11	s	CAPACITOR,CHIP CERAMIC 0.1MF
C1604	1-107-826-11	s	CAPACITOR,CHIP CERAMIC 0.1MF
C1605	1-107-826-11	s	CAPACITOR,CHIP CERAMIC 0.1MF
C1606	1-107-826-11	s	CAPACITOR,CHIP CERAMIC 0.1MF
C1607	1-162-919-11	s	CAPACITOR,CERAMIC 22PF/50V CH
C1608	1-162-927-11	s	CAPACITOR,CERAMIC 100PF/50V CH
C1609	1-107-826-11	s	CAPACITOR,CHIP CERAMIC 0.1MF
C1610	1-162-970-11	s	CAPACITOR CERAMIC 0.01MF/25V B
C1611	1-162-970-11	s	CAPACITOR CERAMIC 0.01MF/25V B
C1612	1-107-826-11	s	CAPACITOR,CHIP CERAMIC 0.1MF
C1613	1-107-826-11	s	CAPACITOR,CHIP CERAMIC 0.1MF
C1614	1-107-826-11	s	CAPACITOR,CHIP CERAMIC 0.1MF
C1616	1-107-826-11	s	CAPACITOR,CHIP CERAMIC 0.1MF
C1618	1-107-826-11	s	CAPACITOR,CHIP CERAMIC 0.1MF
C1620	1-107-826-11	s	CAPACITOR,CHIP CERAMIC 0.1MF
C1621	1-107-826-11	s	CAPACITOR,CHIP CERAMIC 0.1MF
C1622	1-162-921-11	s	CAPACITOR,CERAMIC 33PF/50V CH
C1623	1-107-826-11	s	CAPACITOR,CHIP CERAMIC 0.1MF
C1624	1-162-927-11	s	CAPACITOR,CERAMIC 100PF/50V CH
C1625	1-162-970-11	s	CAPACITOR CERAMIC 0.01MF/25V B
C1626	1-162-970-11	s	CAPACITOR CERAMIC 0.01MF/25V B
C1627	1-107-826-11	s	CAPACITOR,CHIP CERAMIC 0.1MF
C1628	1-107-826-11	s	CAPACITOR,CHIP CERAMIC 0.1MF
C1629	1-107-826-11	s	CAPACITOR,CHIP CERAMIC 0.1MF
C1690	1-107-826-11	s	CAPACITOR,CHIP CERAMIC 0.1MF
C1691	1-162-916-11	s	CAPACITOR,CERAMIC 12PF/50V CH
C1692	1-107-826-11	s	CAPACITOR,CHIP CERAMIC 0.1MF
C1700	1-107-826-11	s	CAPACITOR,CHIP CERAMIC 0.1MF
C1701	1-107-826-11	s	CAPACITOR,CHIP CERAMIC 0.1MF
C1702	1-107-826-11	s	CAPACITOR,CHIP CERAMIC 0.1MF
C1703	1-107-826-11	s	CAPACITOR,CHIP CERAMIC 0.1MF
C1704	1-107-826-11	s	CAPACITOR,CHIP CERAMIC 0.1MF
C1705	1-107-826-11	s	CAPACITOR,CHIP CERAMIC 0.1MF
C1706	1-162-919-11	s	CAPACITOR,CERAMIC 22PF/50V CH
C1707	1-162-927-11	s	CAPACITOR,CERAMIC 100PF/50V CH
C1708	1-107-826-11	s	CAPACITOR,CHIP CERAMIC 0.1MF
C1709	1-107-826-11	s	CAPACITOR,CHIP CERAMIC 0.1MF
C1711	1-107-826-11	s	CAPACITOR,CHIP CERAMIC 0.1MF

(EQ-84/H BOARD [SUFFIX 13-] for RECORDER)

Ref. No. or Q'ty	Part No.	SP	Description
C1712	1-107-826-11	s	CAPACITOR,CHIP CERAMIC 0.1MF
C1713	1-107-826-11	s	CAPACITOR,CHIP CERAMIC 0.1MF
C1714	1-162-921-11	s	CAPACITOR,CERAMIC 33PF/50V CH
C1715	1-107-826-11	s	CAPACITOR,CHIP CERAMIC 0.1MF
C1716	1-162-927-11	s	CAPACITOR,CERAMIC 100PF/50V CH
C1717	1-162-970-11	s	CAPACITOR CERAMIC 0.01MF/25V B
C1718	1-162-970-11	s	CAPACITOR CERAMIC 0.01MF/25V B
C1719	1-107-826-11	s	CAPACITOR,CHIP CERAMIC 0.1MF
C1720	1-107-826-11	s	CAPACITOR,CHIP CERAMIC 0.1MF
C1721	1-107-826-11	s	CAPACITOR,CHIP CERAMIC 0.1MF
C1790	1-107-826-11	s	CAPACITOR,CHIP CERAMIC 0.1MF
C1791 *H	1-164-813-11	s	CAPACITOR,CERAMIC 15PF/50V CH
*M	1-162-916-11	s	CAPACITOR,CERAMIC 12PF/50V CH
C1792	1-107-826-11	s	CAPACITOR,CHIP CERAMIC 0.1MF
CN100	1-580-789-91	s	PIN, CONNECTOR 6P
CN101	1-573-806-91	s	PIN, CONNECTOR 6P
CN200	1-573-806-91	s	PIN, CONNECTOR 6P
CN600	1-691-550-11	s	PIN,CONNECTOR (3P)(SMD)(1.5MM)
CN700	1-691-550-11	s	PIN,CONNECTOR (3P)(SMD)(1.5MM)
CN1100	1-580-756-21	s	PIN, CONNECTOR 7P
CN1600	1-691-550-11	s	PIN,CONNECTOR (3P)(SMD)(1.5MM)
CN1700	1-691-550-11	s	PIN,CONNECTOR (3P)(SMD)(1.5MM)
D200	8-719-938-75	s	DIODE SB05-05CP (RECTI)
D201	8-719-938-75	s	DIODE SB05-05CP (RECTI)
D1030	8-719-064-52	s	DIODE CL-191YG-CD-T
D1100	8-719-941-23	s	DIODE DA204U
D1101	8-719-941-23	s	DIODE DA204U
D1102	8-719-064-52	s	DIODE CL-191YG-CD-T
D1103	8-719-064-52	s	DIODE CL-191YG-CD-T
D1104	8-719-064-52	s	DIODE CL-191YG-CD-T
E100	1-535-877-22	s	CHIP,CHECKER (TEST POINT)
E101	1-535-877-22	s	CHIP,CHECKER (TEST POINT)
E200	1-535-877-22	s	CHIP,CHECKER (TEST POINT)
E1000	1-535-877-22	s	CHIP,CHECKER (TEST POINT)
E1100	1-535-877-22	s	CHIP,CHECKER (TEST POINT)
F100 ⚠	1-576-270-11	s	FUSE CHIP 4A/125V (6125)
F101 ⚠	1-576-270-11	s	FUSE CHIP 4A/125V (6125)
FL300	1-781-811-11	s	FILTER, BAND PASS
FL301	1-781-812-11	s	FILTER, BAND PASS
FL302	1-781-813-11	s	FILTER, BAND PASS
FL303	1-781-814-11	s	FILTER, BAND PASS
FL304	1-781-815-11	s	FILTER, BAND PASS
FL1030	1-239-898-22	s	FILTER, EMI (SMD)
FL1031	1-239-898-22	s	FILTER, EMI (SMD)
FL1032	1-239-898-22	s	FILTER, EMI (SMD)
FL1033	1-239-898-22	s	FILTER, EMI (SMD)
FL1034	1-239-898-22	s	FILTER, EMI (SMD)
FL1035	1-239-898-22	s	FILTER, EMI (SMD)
FL1036	1-239-898-22	s	FILTER, EMI (SMD)
FL1037	1-239-898-22	s	FILTER, EMI (SMD)
FL1038	1-239-898-22	s	FILTER, EMI (SMD)
FL1039	1-239-898-22	s	FILTER, EMI (SMD)
FL1040	1-239-898-22	s	FILTER, EMI (SMD)
FL1041	1-239-898-22	s	FILTER, EMI (SMD)
FL1042	1-239-898-22	s	FILTER, EMI (SMD)
FL1043	1-239-898-22	s	FILTER, EMI (SMD)
FL1044	1-239-898-22	s	FILTER, EMI (SMD)

(EQ-84/H BOARD [SUFFIX 13-] for RECORDER)

Ref. No. or Q'ty	Part No.	SP	Description
FL1045	1-239-898-22	s	FILTER, EMI (SMD)
FL1046	1-239-898-22	s	FILTER, EMI (SMD)
FL1047	1-239-898-22	s	FILTER, EMI (SMD)
FL1048	1-239-898-22	s	FILTER, EMI (SMD)
IC101	8-759-524-27	s	IC TC74VHC244FT(EL)
IC200	8-759-639-86	s	IC SN65LVDS32DR
IC201	8-759-639-86	s	IC SN65LVDS32DR
IC202	8-759-523-81	s	IC TC74VHC08FT(EL)
IC203	8-759-064-36	s	IC MB88346BPFV
IC204	8-759-639-85	s	IC SN65LVDS31DR
IC206	8-759-523-94	s	IC TC74VHC32FT(EL)
IC207	8-752-093-54	s	IC CXA3513R
IC208	8-759-642-22	s	IC UPC29M05T-E2
IC209	6-701-871-11	s	IC TK72150MCL-G
IC300	8-759-669-66	s	IC TLC272CPWR
IC301	8-752-075-38	s	IC CXA3053R
IC302	8-759-101-12	s	IC UPC311G2
IC600	8-752-109-62	s	IC CXA3550AR
IC601	8-759-561-46	s	IC AD8014ART-REEL7
IC602	8-759-642-22	s	IC UPC29M05T-E2
IC700	8-752-109-62	s	IC CXA3550AR
IC701	8-759-642-22	s	IC UPC29M05T-E2
IC931	8-759-337-40	s	IC NJM2904V(TE2)
IC1000	8-759-640-94	o	IC CXD9096R
IC1001	8-759-392-77	s	IC SN74LVC245APW (E20)
IC1030	8-759-523-95	s	IC TC74VHC74FT(EL)
IC1031	8-759-523-94	s	IC TC74VHC32FT(EL)
IC1032	8-759-392-77	s	IC SN74LVC245APW (E20)
IC1033	8-759-392-77	s	IC SN74LVC245APW (E20)
IC1034	8-759-524-09	s	IC TC74VHC153FT (EL)
IC1035	8-759-337-40	s	IC NJM2904V(TE2)
IC1100	8-759-337-40	s	IC NJM2904V(TE2)
IC1101	8-759-337-40	s	IC NJM2904V(TE2)
IC1102	8-759-337-40	s	IC NJM2904V(TE2)
IC1103	8-759-337-40	s	IC NJM2904V(TE2)
IC1104	8-759-524-27	s	IC TC74VHC244FT(EL)
IC1105	8-759-491-50	s	IC TC74VHCT244AFT(EL)
IC1106	8-759-523-81	s	IC TC74VHC08FT(EL)
IC1107	8-759-523-00	s	IC TC74HC4051AFT(EL)
IC1108	8-759-491-46	s	IC TC74VHCT04AFT (EL)
IC1109	8-759-337-40	s	IC NJM2904V(TE2)
IC1110	6-705-737-01	s	IC CAT24WC16WI-TE13
IC1111	6-705-737-01	s	IC CAT24WC16WI-TE13
IC1112	8-759-523-02	s	IC TC74HC4053AFT(EL)
IC1113*H	8-759-538-30	s	IC HD64F3437TFLH16
*M	6-801-811-01	s	IC HD6433437WV32XV
IC1114	8-759-337-40	s	IC NJM2904V(TE2)
IC1115	8-759-337-40	s	IC NJM2904V(TE2)
IC1600	8-752-109-62	s	IC CXA3550AR
IC1601	8-759-561-46	s	IC AD8014ART-REEL7
IC1700	8-752-109-62	s	IC CXA3550AR
L100	1-416-344-11	s	COIL, CHOKE 10UH
L101	1-416-344-11	s	COIL, CHOKE 10UH
L102	1-416-344-11	s	COIL, CHOKE 10UH
L103	1-416-344-11	s	COIL, CHOKE 10UH
L690	1-410-370-31	s	INDUCTOR,CHIP 1.2UH (3225)
L790	1-410-370-31	s	INDUCTOR,CHIP 1.2UH (3225)
L1690	1-410-370-31	s	INDUCTOR,CHIP 1.2UH (3225)

(EQ-84/H BOARD [SUFFIX 13-] for RECORDER)

Ref. No. or Q'ty	Part No.	SP	Description
L1790	1-410-370-31	s	INDUCTOR,CHIP 1.2UH (3225)
Q200	8-729-140-63	s	TRANSISTOR 2SA1611-M5M6
Q201	8-729-140-63	s	TRANSISTOR 2SA1611-M5M6
Q202	8-729-928-90	s	TRANSISTOR DTC114EE
Q203	8-729-928-90	s	TRANSISTOR DTC114EE
Q300	8-729-143-13	s	TRANSISTOR 2SC4176-B34
Q301	8-729-928-81	s	TRANSISTOR DTC144EE
Q302	8-729-143-07	s	TRANSISTOR 2SA1610-Y33
Q303	8-729-143-13	s	TRANSISTOR 2SC4176-B34
Q304	8-729-143-13	s	TRANSISTOR 2SC4176-B34
Q305	8-729-928-81	s	TRANSISTOR DTC144EE
Q306	8-729-928-81	s	TRANSISTOR DTC144EE
Q307	8-729-143-07	s	TRANSISTOR 2SA1610-Y33
Q308	8-729-143-07	s	TRANSISTOR 2SA1610-Y33
Q309	8-729-143-13	s	TRANSISTOR 2SC4176-B34
Q310	8-729-143-13	s	TRANSISTOR 2SC4176-B34
Q311	8-729-928-81	s	TRANSISTOR DTC144EE
Q312	8-729-928-81	s	TRANSISTOR DTC144EE
Q313	8-729-143-07	s	TRANSISTOR 2SA1610-Y33
Q314	8-729-143-07	s	TRANSISTOR 2SA1610-Y33
Q690	8-729-143-13	s	TRANSISTOR 2SC4176-B34
Q691	8-729-143-07	s	TRANSISTOR 2SA1610-Y33
Q700	8-729-928-81	s	TRANSISTOR DTC144EE
Q701	8-729-143-07	s	TRANSISTOR 2SA1610-Y33
Q702	8-729-143-07	s	TRANSISTOR 2SA1610-Y33
Q790	8-729-143-13	s	TRANSISTOR 2SC4176-B34
Q791	8-729-143-07	s	TRANSISTOR 2SA1610-Y33
Q1102	8-729-928-81	s	TRANSISTOR DTC144EE
Q1103	8-729-928-81	s	TRANSISTOR DTC144EE
Q1104	8-729-928-81	s	TRANSISTOR DTC144EE
Q1105	8-729-928-81	s	TRANSISTOR DTC144EE
Q1600	8-729-143-13	s	TRANSISTOR 2SC4176-B34
Q1690	8-729-143-13	s	TRANSISTOR 2SC4176-B34
Q1691	8-729-143-07	s	TRANSISTOR 2SA1610-Y33
Q1700	8-729-928-81	s	TRANSISTOR DTC144EE
Q1701	8-729-143-07	s	TRANSISTOR 2SA1610-Y33
Q1702	8-729-143-07	s	TRANSISTOR 2SA1610-Y33
Q1790	8-729-143-13	s	TRANSISTOR 2SC4176-B34
Q1791	8-729-143-07	s	TRANSISTOR 2SA1610-Y33
R100	1-218-871-11	s	RESISTOR,CHIP 10K 1/10W (1608)
R101	1-218-871-11	s	RESISTOR,CHIP 10K 1/10W (1608)
R102	1-218-871-11	s	RESISTOR,CHIP 10K 1/10W (1608)
R103	1-218-871-11	s	RESISTOR,CHIP 10K 1/10W (1608)
R104	1-218-871-11	s	RESISTOR,CHIP 10K 1/10W (1608)
R105	1-218-871-11	s	RESISTOR,CHIP 10K 1/10W (1608)
R106	1-218-871-11	s	RESISTOR,CHIP 10K 1/10W (1608)
R107	1-218-871-11	s	RESISTOR,CHIP 10K 1/10W (1608)
R108	1-218-871-11	s	RESISTOR,CHIP 10K 1/10W (1608)
R109	1-218-871-11	s	RESISTOR,CHIP 10K 1/10W (1608)
R110	1-218-871-11	s	RESISTOR,CHIP 10K 1/10W (1608)
R111	1-218-871-11	s	RESISTOR,CHIP 10K 1/10W (1608)
R112	1-218-847-11	s	RESISTOR, CHIP 1K 1/10W (1608)
R113	1-218-847-11	s	RESISTOR, CHIP 1K 1/10W (1608)
R114	1-218-847-11	s	RESISTOR, CHIP 1K 1/10W (1608)
R115	1-218-847-11	s	RESISTOR, CHIP 1K 1/10W (1608)
R116	1-218-847-11	s	RESISTOR, CHIP 1K 1/10W (1608)
R117	1-218-847-11	s	RESISTOR, CHIP 1K 1/10W (1608)
R118	1-218-847-11	s	RESISTOR, CHIP 1K 1/10W (1608)

(EQ-84/H BOARD [SUFFIX 13-] for RECORDER)

Ref. No. or Q'ty	Part No.	SP	Description
R119	1-218-847-11	s	RESISTOR, CHIP 1K 1/10W (1608)
R120	1-218-847-11	s	RESISTOR, CHIP 1K 1/10W (1608)
R121	1-218-847-11	s	RESISTOR, CHIP 1K 1/10W (1608)
R122	1-218-847-11	s	RESISTOR, CHIP 1K 1/10W (1608)
R123	1-218-847-11	s	RESISTOR, CHIP 1K 1/10W (1608)
R124	1-216-864-11	s	CONDUCTOR, CHIP (1608)
R127	1-216-864-11	s	CONDUCTOR, CHIP (1608)
R128	1-218-871-11	s	RESISTOR,CHIP 10K 1/10W (1608)
R129	1-218-871-11	s	RESISTOR,CHIP 10K 1/10W (1608)
R130	1-218-871-11	s	RESISTOR,CHIP 10K 1/10W (1608)
R131	1-218-871-11	s	RESISTOR,CHIP 10K 1/10W (1608)
R132	1-218-871-11	s	RESISTOR,CHIP 10K 1/10W (1608)
R133	1-218-851-11	s	RESISTOR,CHIP 1.5K 1/10W(1608)
R134	1-218-851-11	s	RESISTOR,CHIP 1.5K 1/10W(1608)
R135	1-218-871-11	s	RESISTOR,CHIP 10K 1/10W (1608)
R136	1-218-871-11	s	RESISTOR,CHIP 10K 1/10W (1608)
R137	1-218-831-11	s	RESISTOR, CHIP 220 1/10W(1608)
R138	1-218-831-11	s	RESISTOR, CHIP 220 1/10W(1608)
R139	1-218-871-11	s	RESISTOR,CHIP 10K 1/10W (1608)
R200	1-218-823-11	s	RESISTOR,CHIP 100 1/10W (1608)
R201	1-218-823-11	s	RESISTOR,CHIP 100 1/10W (1608)
R202	1-218-823-11	s	RESISTOR,CHIP 100 1/10W (1608)
R203	1-218-823-11	s	RESISTOR,CHIP 100 1/10W (1608)
R204	1-218-823-11	s	RESISTOR,CHIP 100 1/10W (1608)
R205	1-218-823-11	s	RESISTOR,CHIP 100 1/10W (1608)
R206	1-218-871-11	s	RESISTOR,CHIP 10K 1/10W (1608)
R207	1-216-864-11	s	CONDUCTOR, CHIP (1608)
R208	1-216-864-11	s	CONDUCTOR, CHIP (1608)
R209	1-216-864-11	s	CONDUCTOR, CHIP (1608)
R210	1-216-864-11	s	CONDUCTOR, CHIP (1608)
R211	1-216-864-11	s	CONDUCTOR, CHIP (1608)
R212	1-216-864-11	s	CONDUCTOR, CHIP (1608)
R213	1-216-864-11	s	CONDUCTOR, CHIP (1608)
R214	1-216-864-11	s	CONDUCTOR, CHIP (1608)
R215	1-216-864-11	s	CONDUCTOR, CHIP (1608)
R216	1-216-864-11	s	CONDUCTOR, CHIP (1608)
R217	1-216-864-11	s	CONDUCTOR, CHIP (1608)
R218	1-216-864-11	s	CONDUCTOR, CHIP (1608)
R219	1-216-864-11	s	CONDUCTOR, CHIP (1608)
R220	1-216-864-11	s	CONDUCTOR, CHIP (1608)
R221	1-216-864-11	s	CONDUCTOR, CHIP (1608)
R222	1-216-864-11	s	CONDUCTOR, CHIP (1608)
R223	1-211-985-11	s	RESISTOR,CHIP 47 1/10W (1608)
R224	1-218-871-11	s	RESISTOR,CHIP 10K 1/10W (1608)
R225	1-218-871-11	s	RESISTOR,CHIP 10K 1/10W (1608)
R226	1-218-871-11	s	RESISTOR,CHIP 10K 1/10W (1608)
R227	1-218-871-11	s	RESISTOR,CHIP 10K 1/10W (1608)
R228	1-216-864-11	s	CONDUCTOR, CHIP (1608)
R229	1-216-864-11	s	CONDUCTOR, CHIP (1608)
R230	1-216-864-11	s	CONDUCTOR, CHIP (1608)
R231	1-216-864-11	s	CONDUCTOR, CHIP (1608)
R232	1-216-864-11	s	CONDUCTOR, CHIP (1608)
R233	1-216-864-11	s	CONDUCTOR, CHIP (1608)
R234	1-216-864-11	s	CONDUCTOR, CHIP (1608)
R254	1-218-878-11	s	RESISTOR,CHIP 20K 1/10W (1608)
R255	1-218-878-11	s	RESISTOR,CHIP 20K 1/10W (1608)
R256	1-218-878-11	s	RESISTOR,CHIP 20K 1/10W (1608)
R257	1-218-878-11	s	RESISTOR,CHIP 20K 1/10W (1608)
R258	1-218-871-11	s	RESISTOR,CHIP 10K 1/10W (1608)

(EQ-84/H BOARD [SUFFIX 13-] for RECORDER)

Ref. No. or Q'ty	Part No.	SP	Description
R259	1-218-895-11	s	RESISTOR,CHIP 100K 1/10W(1608)
R260	1-218-895-11	s	RESISTOR,CHIP 100K 1/10W(1608)
R261	1-218-871-11	s	RESISTOR,CHIP 10K 1/10W (1608)
R262	1-218-847-11	s	RESISTOR, CHIP 1K 1/10W (1608)
R263	1-218-847-11	s	RESISTOR, CHIP 1K 1/10W (1608)
R264	1-218-871-11	s	RESISTOR,CHIP 10K 1/10W (1608)
R265	1-218-871-11	s	RESISTOR,CHIP 10K 1/10W (1608)
R266	1-218-849-11	s	RESISTOR,CHIP 1.2K 1/10W(1608)
R267	1-218-849-11	s	RESISTOR,CHIP 1.2K 1/10W(1608)
R268	1-218-831-11	s	RESISTOR, CHIP 220 1/10W(1608)
R269	1-218-831-11	s	RESISTOR, CHIP 220 1/10W(1608)
R270	1-218-847-11	s	RESISTOR, CHIP 1K 1/10W (1608)
R271	1-218-847-11	s	RESISTOR, CHIP 1K 1/10W (1608)
R272	1-218-847-11	s	RESISTOR, CHIP 1K 1/10W (1608)
R273	1-218-835-11	s	RESISTOR,CHIP 330 1/10W (1608)
R274	1-218-835-11	s	RESISTOR,CHIP 330 1/10W (1608)
R275	1-218-827-11	s	RESISTOR,CHIP 150 1/10W (1608)
R276	1-218-827-11	s	RESISTOR,CHIP 150 1/10W (1608)
R277	1-218-854-11	s	RESISTOR,CHIP 2K 1/10W (1608)
R278	1-218-854-11	s	RESISTOR,CHIP 2K 1/10W (1608)
R279	1-216-864-11	s	CONDUCTOR, CHIP (1608)
R280	1-218-855-11	s	RESISTOR,CHIP 2.2K 1/10W(1608)
R282	1-218-827-11	s	RESISTOR,CHIP 150 1/10W (1608)
R283	1-218-854-11	s	RESISTOR,CHIP 2K 1/10W (1608)
R284	1-218-854-11	s	RESISTOR,CHIP 2K 1/10W (1608)
R286	1-216-864-11	s	CONDUCTOR, CHIP (1608)
R287	1-216-864-11	s	CONDUCTOR, CHIP (1608)
R288 *H	1-218-863-11	s	RESISTOR,CHIP 4.7K 1/10W(1608)
R293	1-218-823-11	s	RESISTOR,CHIP 100 1/10W (1608)
R294	1-211-985-11	s	RESISTOR,CHIP 47 1/10W (1608)
R295	1-211-985-11	s	RESISTOR,CHIP 47 1/10W (1608)
R296	1-211-985-11	s	RESISTOR,CHIP 47 1/10W (1608)
R297	1-211-985-11	s	RESISTOR,CHIP 47 1/10W (1608)
R298	1-218-827-11	s	RESISTOR,CHIP 150 1/10W (1608)
R299	1-218-826-11	s	RESISTOR,CHIP 130 1/10W (1608)
R300	1-218-823-11	s	RESISTOR,CHIP 100 1/10W (1608)
R301	1-218-847-11	s	RESISTOR, CHIP 1K 1/10W (1608)
R302	1-218-835-11	s	RESISTOR,CHIP 330 1/10W (1608)
R303	1-218-854-11	s	RESISTOR,CHIP 2K 1/10W (1608)
R304	1-218-854-11	s	RESISTOR,CHIP 2K 1/10W (1608)
R305	1-218-823-11	s	RESISTOR,CHIP 100 1/10W (1608)
R306	1-218-823-11	s	RESISTOR,CHIP 100 1/10W (1608)
R307	1-218-823-11	s	RESISTOR,CHIP 100 1/10W (1608)
R308	1-218-823-11	s	RESISTOR,CHIP 100 1/10W (1608)
R309	1-218-871-11	s	RESISTOR,CHIP 10K 1/10W (1608)
R310	1-218-847-11	s	RESISTOR, CHIP 1K 1/10W (1608)
R311	1-218-847-11	s	RESISTOR, CHIP 1K 1/10W (1608)
R312	1-218-835-11	s	RESISTOR,CHIP 330 1/10W (1608)
R313	1-218-835-11	s	RESISTOR,CHIP 330 1/10W (1608)
R314	1-218-878-11	s	RESISTOR,CHIP 20K 1/10W (1608)
R315	1-218-880-11	s	RESISTOR,CHIP 24K 1/10W (1608)
R316	1-218-854-11	s	RESISTOR,CHIP 2K 1/10W (1608)
R317	1-218-854-11	s	RESISTOR,CHIP 2K 1/10W (1608)
R318	1-218-854-11	s	RESISTOR,CHIP 2K 1/10W (1608)
R319	1-218-854-11	s	RESISTOR,CHIP 2K 1/10W (1608)
R320	1-218-854-11	s	RESISTOR,CHIP 2K 1/10W (1608)
R321	1-218-823-11	s	RESISTOR,CHIP 100 1/10W (1608)
R322	1-218-823-11	s	RESISTOR,CHIP 100 1/10W (1608)
R323	1-218-847-11	s	RESISTOR, CHIP 1K 1/10W (1608)

(EQ-84/H BOARD [SUFFIX 13-] for RECORDER)

Ref. No. or Q'ty	Part No.	SP	Description
R324	1-218-879-11	s	RESISTOR,CHIP 22K 1/10W (1608)
R325	1-218-847-11	s	RESISTOR, CHIP 1K 1/10W (1608)
R326	1-218-854-11	s	RESISTOR,CHIP 2K 1/10W (1608)
R327	1-218-847-11	s	RESISTOR, CHIP 1K 1/10W (1608)
R328	1-218-854-11	s	RESISTOR,CHIP 2K 1/10W (1608)
R329	1-218-823-11	s	RESISTOR,CHIP 100 1/10W (1608)
R330	1-218-823-11	s	RESISTOR,CHIP 100 1/10W (1608)
R331	1-218-854-11	s	RESISTOR,CHIP 2K 1/10W (1608)
R332	1-218-847-11	s	RESISTOR, CHIP 1K 1/10W (1608)
R333	1-218-847-11	s	RESISTOR, CHIP 1K 1/10W (1608)
R334	1-218-835-11	s	RESISTOR,CHIP 330 1/10W (1608)
R335	1-218-835-11	s	RESISTOR,CHIP 330 1/10W (1608)
R336	1-218-871-11	s	RESISTOR,CHIP 10K 1/10W (1608)
R337	1-218-847-11	s	RESISTOR, CHIP 1K 1/10W (1608)
R338	1-218-854-11	s	RESISTOR,CHIP 2K 1/10W (1608)
R339	1-218-854-11	s	RESISTOR,CHIP 2K 1/10W (1608)
R340	1-218-854-11	s	RESISTOR,CHIP 2K 1/10W (1608)
R341	1-218-854-11	s	RESISTOR,CHIP 2K 1/10W (1608)
R342	1-218-823-11	s	RESISTOR,CHIP 100 1/10W (1608)
R343	1-218-823-11	s	RESISTOR,CHIP 100 1/10W (1608)
R344	1-218-859-11	s	RESISTOR,CHIP 3.3K 1/10W(1608)
R345	1-218-823-11	s	RESISTOR,CHIP 100 1/10W (1608)
R346	1-218-859-11	s	RESISTOR,CHIP 3.3K 1/10W(1608)
R347	1-218-823-11	s	RESISTOR,CHIP 100 1/10W (1608)
R348	1-218-823-11	s	RESISTOR,CHIP 100 1/10W (1608)
R600	1-211-969-11	s	RESISTOR,CHIP 10 1/10W (1608)
R601	1-211-969-11	s	RESISTOR,CHIP 10 1/10W (1608)
R602	1-218-878-11	s	RESISTOR,CHIP 20K 1/10W (1608)
R603	1-218-847-11	s	RESISTOR, CHIP 1K 1/10W (1608)
R604	1-218-835-11	s	RESISTOR,CHIP 330 1/10W (1608)
R605	1-218-847-11	s	RESISTOR, CHIP 1K 1/10W (1608)
R606	1-218-841-11	s	RESISTOR,CHIP 560 1/10W (1608)
R607	1-218-847-11	s	RESISTOR, CHIP 1K 1/10W (1608)
R609	1-218-847-11	s	RESISTOR, CHIP 1K 1/10W (1608)
R612	1-211-985-11	s	RESISTOR,CHIP 47 1/10W (1608)
R613	1-218-871-11	s	RESISTOR,CHIP 10K 1/10W (1608)
R614	1-218-871-11	s	RESISTOR,CHIP 10K 1/10W (1608)
R615	1-218-882-11	s	RESISTOR, CHIP 30K 1/10W(1608)
R616	1-218-877-11	s	RESISTOR,CHIP 18K 1/10W (1608)
R621	1-218-823-11	s	RESISTOR,CHIP 100 1/10W (1608)
R622	1-218-854-11	s	RESISTOR,CHIP 2K 1/10W (1608)
R623	1-218-847-11	s	RESISTOR, CHIP 1K 1/10W (1608)
R624	1-218-879-11	s	RESISTOR,CHIP 22K 1/10W (1608)
R625	1-218-823-11	s	RESISTOR,CHIP 100 1/10W (1608)
R631	1-216-864-11	s	CONDUCTOR, CHIP (1608)
R633	1-216-864-11	s	CONDUCTOR, CHIP (1608)
R634	1-216-864-11	s	CONDUCTOR, CHIP (1608)
R690	1-218-831-11	s	RESISTOR, CHIP 220 1/10W(1608)
R691	1-218-830-11	s	RESISTOR,CHIP 200 1/10W (1608)
R692	1-218-841-11	s	RESISTOR,CHIP 560 1/10W (1608)
R693	1-218-847-11	s	RESISTOR, CHIP 1K 1/10W (1608)
R700	1-218-855-11	s	RESISTOR,CHIP 2.2K 1/10W(1608)
R701	1-211-969-11	s	RESISTOR,CHIP 10 1/10W (1608)
R702	1-218-855-11	s	RESISTOR,CHIP 2.2K 1/10W(1608)
R703	1-211-969-11	s	RESISTOR,CHIP 10 1/10W (1608)
R704	1-218-878-11	s	RESISTOR,CHIP 20K 1/10W (1608)
R705	1-218-841-11	s	RESISTOR,CHIP 560 1/10W (1608)
R706	1-218-847-11	s	RESISTOR, CHIP 1K 1/10W (1608)
R707	1-218-871-11	s	RESISTOR,CHIP 10K 1/10W (1608)

(EQ-84/H BOARD [SUFFIX 13-] for RECORDER)

Ref. No. or Q'ty	Part No.	SP	Description
R708	1-218-871-11	s	RESISTOR,CHIP 10K 1/10W (1608)
R709	1-218-882-11	s	RESISTOR, CHIP 30K 1/10W(1608)
R710	1-218-877-11	s	RESISTOR,CHIP 18K 1/10W (1608)
R715	1-218-823-11	s	RESISTOR,CHIP 100 1/10W (1608)
R716	1-218-854-11	s	RESISTOR,CHIP 2K 1/10W (1608)
R717	1-218-847-11	s	RESISTOR, CHIP 1K 1/10W (1608)
R718	1-218-879-11	s	RESISTOR,CHIP 22K 1/10W (1608)
R725	1-216-864-11	s	CONDUCTOR, CHIP (1608)
R727	1-211-985-11	s	RESISTOR,CHIP 47 1/10W (1608)
R728	1-211-985-11	s	RESISTOR,CHIP 47 1/10W (1608)
R790	1-218-831-11	s	RESISTOR, CHIP 220 1/10W(1608)
R791	1-218-830-11	s	RESISTOR,CHIP 200 1/10W (1608)
R792	1-218-841-11	s	RESISTOR,CHIP 560 1/10W (1608)
R793	1-218-847-11	s	RESISTOR, CHIP 1K 1/10W (1608)
R908	1-218-895-11	s	RESISTOR,CHIP 100K 1/10W(1608)
R942	1-218-895-11	s	RESISTOR,CHIP 100K 1/10W(1608)
R1000	1-218-887-11	s	RESISTOR,CHIP 47K 1/10W (1608)
R1001	1-218-887-11	s	RESISTOR,CHIP 47K 1/10W (1608)
R1002	1-218-883-11	s	RESISTOR,CHIP 33K 1/10W (1608)
R1003	1-218-883-11	s	RESISTOR,CHIP 33K 1/10W (1608)
R1004	1-218-823-11	s	RESISTOR,CHIP 100 1/10W (1608)
R1005	1-216-864-11	s	CONDUCTOR, CHIP (1608)
R1006	1-218-847-11	s	RESISTOR, CHIP 1K 1/10W (1608)
R1030	1-218-895-11	s	RESISTOR,CHIP 100K 1/10W(1608)
R1031	1-218-831-11	s	RESISTOR, CHIP 220 1/10W(1608)
R1032	1-218-895-11	s	RESISTOR,CHIP 100K 1/10W(1608)
R1033	1-218-895-11	s	RESISTOR,CHIP 100K 1/10W(1608)
R1034	1-218-847-11	s	RESISTOR, CHIP 1K 1/10W (1608)
R1035	1-218-847-11	s	RESISTOR, CHIP 1K 1/10W (1608)
R1036	1-211-985-11	s	RESISTOR,CHIP 47 1/10W (1608)
R1037	1-218-835-11	s	RESISTOR,CHIP 330 1/10W (1608)
R1038	1-218-829-11	s	RESISTOR,CHIP 180 1/10W (1608)
R1039	1-218-847-11	s	RESISTOR, CHIP 1K 1/10W (1608)
R1040	1-218-835-11	s	RESISTOR,CHIP 330 1/10W (1608)
R1041	1-216-864-11	s	CONDUCTOR, CHIP (1608)
R1042	1-216-864-11	s	CONDUCTOR, CHIP (1608)
R1043	1-216-864-11	s	CONDUCTOR, CHIP (1608)
R1044	1-216-864-11	s	CONDUCTOR, CHIP (1608)
R1045	1-216-864-11	s	CONDUCTOR, CHIP (1608)
R1046	1-216-864-11	s	CONDUCTOR, CHIP (1608)
R1047	1-216-864-11	s	CONDUCTOR, CHIP (1608)
R1048	1-216-864-11	s	CONDUCTOR, CHIP (1608)
R1049	1-216-864-11	s	CONDUCTOR, CHIP (1608)
R1050	1-216-864-11	s	CONDUCTOR, CHIP (1608)
R1051	1-216-864-11	s	CONDUCTOR, CHIP (1608)
R1052	1-216-864-11	s	CONDUCTOR, CHIP (1608)
R1053	1-216-864-11	s	CONDUCTOR, CHIP (1608)
R1054	1-218-882-11	s	RESISTOR, CHIP 30K 1/10W(1608)
R1055	1-218-882-11	s	RESISTOR, CHIP 30K 1/10W(1608)
R1056	1-218-882-11	s	RESISTOR, CHIP 30K 1/10W(1608)
R1057	1-218-882-11	s	RESISTOR, CHIP 30K 1/10W(1608)
R1100	1-218-883-11	s	RESISTOR,CHIP 33K 1/10W (1608)
R1101	1-218-883-11	s	RESISTOR,CHIP 33K 1/10W (1608)
R1102	1-218-887-11	s	RESISTOR,CHIP 47K 1/10W (1608)
R1103	1-218-887-11	s	RESISTOR,CHIP 47K 1/10W (1608)
R1104	1-218-883-11	s	RESISTOR,CHIP 33K 1/10W (1608)
R1105	1-218-883-11	s	RESISTOR,CHIP 33K 1/10W (1608)
R1106	1-218-887-11	s	RESISTOR,CHIP 47K 1/10W (1608)
R1107	1-218-887-11	s	RESISTOR,CHIP 47K 1/10W (1608)

(EQ-84/H BOARD [SUFFIX 13-] for RECORDER)

Ref. No. or Q'ty	Part No.	SP	Description
R1108	1-218-883-11	s	RESISTOR,CHIP 33K 1/10W (1608)
R1109	1-218-883-11	s	RESISTOR,CHIP 33K 1/10W (1608)
R1110	1-218-887-11	s	RESISTOR,CHIP 47K 1/10W (1608)
R1111	1-218-887-11	s	RESISTOR,CHIP 47K 1/10W (1608)
R1113	1-218-895-11	s	RESISTOR,CHIP 100K 1/10W(1608)
R1114	1-218-895-11	s	RESISTOR,CHIP 100K 1/10W(1608)
R1115	1-218-895-11	s	RESISTOR,CHIP 100K 1/10W(1608)
R1116	1-218-895-11	s	RESISTOR,CHIP 100K 1/10W(1608)
R1117	1-218-883-11	s	RESISTOR,CHIP 33K 1/10W (1608)
R1118	1-218-883-11	s	RESISTOR,CHIP 33K 1/10W (1608)
R1119	1-218-895-11	s	RESISTOR,CHIP 100K 1/10W(1608)
R1120	1-218-895-11	s	RESISTOR,CHIP 100K 1/10W(1608)
R1121	1-218-895-11	s	RESISTOR,CHIP 100K 1/10W(1608)
R1122	1-218-823-11	s	RESISTOR,CHIP 100 1/10W (1608)
R1123	1-218-823-11	s	RESISTOR,CHIP 100 1/10W (1608)
R1124	1-218-823-11	s	RESISTOR,CHIP 100 1/10W (1608)
R1125	1-218-823-11	s	RESISTOR,CHIP 100 1/10W (1608)
R1126	1-218-823-11	s	RESISTOR,CHIP 100 1/10W (1608)
R1127	1-218-823-11	s	RESISTOR,CHIP 100 1/10W (1608)
R1128	1-218-823-11	s	RESISTOR,CHIP 100 1/10W (1608)
R1129	1-218-823-11	s	RESISTOR,CHIP 100 1/10W (1608)
R1130	1-218-847-11	s	RESISTOR, CHIP 1K 1/10W (1608)
R1131	1-218-871-11	s	RESISTOR,CHIP 10K 1/10W (1608)
R1132	1-218-887-11	s	RESISTOR,CHIP 47K 1/10W (1608)
R1133	1-218-887-11	s	RESISTOR,CHIP 47K 1/10W (1608)
R1134	1-218-871-11	s	RESISTOR,CHIP 10K 1/10W (1608)
R1135	1-218-895-11	s	RESISTOR,CHIP 100K 1/10W(1608)
R1136	1-218-871-11	s	RESISTOR,CHIP 10K 1/10W (1608)
R1137	1-218-895-11	s	RESISTOR,CHIP 100K 1/10W(1608)
R1138	1-218-871-11	s	RESISTOR,CHIP 10K 1/10W (1608)
R1141	1-216-864-11	s	CONDUCTOR, CHIP (1608)
R1142	1-216-864-11	s	CONDUCTOR, CHIP (1608)
R1143	1-218-847-11	s	RESISTOR, CHIP 1K 1/10W (1608)
R1144	1-218-847-11	s	RESISTOR, CHIP 1K 1/10W (1608)
R1145	1-218-847-11	s	RESISTOR, CHIP 1K 1/10W (1608)
R1146	1-218-847-11	s	RESISTOR, CHIP 1K 1/10W (1608)
R1147	1-218-847-11	s	RESISTOR, CHIP 1K 1/10W (1608)
R1148	1-218-871-11	s	RESISTOR,CHIP 10K 1/10W (1608)
R1149	1-218-871-11	s	RESISTOR,CHIP 10K 1/10W (1608)
R1150	1-218-871-11	s	RESISTOR,CHIP 10K 1/10W (1608)
R1151	1-218-895-11	s	RESISTOR,CHIP 100K 1/10W(1608)
R1152	1-218-871-11	s	RESISTOR,CHIP 10K 1/10W (1608)
R1153	1-218-895-11	s	RESISTOR,CHIP 100K 1/10W(1608)
R1154	1-218-895-11	s	RESISTOR,CHIP 100K 1/10W(1608)
R1155	1-218-895-11	s	RESISTOR,CHIP 100K 1/10W(1608)
R1159	1-218-835-11	s	RESISTOR,CHIP 330 1/10W (1608)
R1160	1-218-835-11	s	RESISTOR,CHIP 330 1/10W (1608)
R1161	1-218-823-11	s	RESISTOR,CHIP 100 1/10W (1608)
R1162	1-218-847-11	s	RESISTOR, CHIP 1K 1/10W (1608)
R1163	1-218-847-11	s	RESISTOR, CHIP 1K 1/10W (1608)
R1164	1-218-871-11	s	RESISTOR,CHIP 10K 1/10W (1608)
R1165	1-218-835-11	s	RESISTOR,CHIP 330 1/10W (1608)
R1166	1-218-887-11	s	RESISTOR,CHIP 47K 1/10W (1608)
R1167	1-218-823-11	s	RESISTOR,CHIP 100 1/10W (1608)
R1168	1-218-823-11	s	RESISTOR,CHIP 100 1/10W (1608)
R1169	1-218-823-11	s	RESISTOR,CHIP 100 1/10W (1608)
R1170	1-218-823-11	s	RESISTOR,CHIP 100 1/10W (1608)
R1171	1-218-879-11	s	RESISTOR,CHIP 22K 1/10W (1608)
R1172	1-218-879-11	s	RESISTOR,CHIP 22K 1/10W (1608)

(EQ-84/H BOARD [SUFFIX 13-] for RECORDER)

Ref. No. or Q'ty	Part No.	SP	Description
R1173	1-218-879-11	s	RESISTOR,CHIP 22K 1/10W (1608)
R1174	1-218-879-11	s	RESISTOR,CHIP 22K 1/10W (1608)
R1175	1-218-883-11	s	RESISTOR,CHIP 33K 1/10W (1608)
R1176	1-218-883-11	s	RESISTOR,CHIP 33K 1/10W (1608)
R1177	1-218-883-11	s	RESISTOR,CHIP 33K 1/10W (1608)
R1178	1-218-883-11	s	RESISTOR,CHIP 33K 1/10W (1608)
R1179	1-216-864-11	s	CONDUCTOR, CHIP (1608)
R1600	1-211-969-11	s	RESISTOR,CHIP 10 1/10W (1608)
R1601	1-211-969-11	s	RESISTOR,CHIP 10 1/10W (1608)
R1602	1-218-878-11	s	RESISTOR,CHIP 20K 1/10W (1608)
R1603	1-218-847-11	s	RESISTOR, CHIP 1K 1/10W (1608)
R1604	1-218-835-11	s	RESISTOR,CHIP 330 1/10W (1608)
R1605	1-218-847-11	s	RESISTOR, CHIP 1K 1/10W (1608)
R1606	1-218-841-11	s	RESISTOR,CHIP 560 1/10W (1608)
R1607	1-218-847-11	s	RESISTOR, CHIP 1K 1/10W (1608)
R1609	1-218-847-11	s	RESISTOR, CHIP 1K 1/10W (1608)
R1610	1-218-823-11	s	RESISTOR,CHIP 100 1/10W (1608)
R1611	1-218-847-11	s	RESISTOR, CHIP 1K 1/10W (1608)
R1612	1-218-871-11	s	RESISTOR,CHIP 10K 1/10W (1608)
R1613	1-211-985-11	s	RESISTOR,CHIP 47 1/10W (1608)
R1614	1-211-985-11	s	RESISTOR,CHIP 47 1/10W (1608)
R1615	1-218-871-11	s	RESISTOR,CHIP 10K 1/10W (1608)
R1616	1-218-882-11	s	RESISTOR, CHIP 30K 1/10W(1608)
R1617	1-218-877-11	s	RESISTOR,CHIP 18K 1/10W (1608)
R1622	1-218-823-11	s	RESISTOR,CHIP 100 1/10W (1608)
R1623	1-218-854-11	s	RESISTOR,CHIP 2K 1/10W (1608)
R1624	1-218-847-11	s	RESISTOR, CHIP 1K 1/10W (1608)
R1625	1-218-879-11	s	RESISTOR,CHIP 22K 1/10W (1608)
R1632	1-216-864-11	s	CONDUCTOR, CHIP (1608)
R1634	1-216-864-11	s	CONDUCTOR, CHIP (1608)
R1635	1-216-864-11	s	CONDUCTOR, CHIP (1608)
R1690	1-218-831-11	s	RESISTOR, CHIP 220 1/10W(1608)
R1691	1-218-830-11	s	RESISTOR,CHIP 200 1/10W (1608)
R1692	1-218-841-11	s	RESISTOR,CHIP 560 1/10W (1608)
R1693	1-218-847-11	s	RESISTOR, CHIP 1K 1/10W (1608)
R1700	1-218-855-11	s	RESISTOR,CHIP 2.2K 1/10W(1608)
R1701	1-211-969-11	s	RESISTOR,CHIP 10 1/10W (1608)
R1702	1-218-855-11	s	RESISTOR,CHIP 2.2K 1/10W(1608)
R1703	1-211-969-11	s	RESISTOR,CHIP 10 1/10W (1608)
R1704	1-218-878-11	s	RESISTOR,CHIP 20K 1/10W (1608)
R1705	1-218-841-11	s	RESISTOR,CHIP 560 1/10W (1608)
R1706	1-218-847-11	s	RESISTOR, CHIP 1K 1/10W (1608)
R1707	1-218-871-11	s	RESISTOR,CHIP 10K 1/10W (1608)
R1708	1-218-871-11	s	RESISTOR,CHIP 10K 1/10W (1608)
R1709	1-218-882-11	s	RESISTOR, CHIP 30K 1/10W(1608)
R1710	1-218-877-11	s	RESISTOR,CHIP 18K 1/10W (1608)
R1715	1-218-823-11	s	RESISTOR,CHIP 100 1/10W (1608)
R1716	1-218-854-11	s	RESISTOR,CHIP 2K 1/10W (1608)
R1717	1-218-847-11	s	RESISTOR, CHIP 1K 1/10W (1608)
R1718	1-218-879-11	s	RESISTOR,CHIP 22K 1/10W (1608)
R1725	1-216-864-11	s	CONDUCTOR, CHIP (1608)
R1727	1-211-985-11	s	RESISTOR,CHIP 47 1/10W (1608)
R1728	1-211-985-11	s	RESISTOR,CHIP 47 1/10W (1608)
R1790	1-218-831-11	s	RESISTOR, CHIP 220 1/10W(1608)
R1791	1-218-830-11	s	RESISTOR,CHIP 200 1/10W (1608)
R1792	1-218-841-11	s	RESISTOR,CHIP 560 1/10W (1608)
R1793	1-218-847-11	s	RESISTOR, CHIP 1K 1/10W (1608)
S200	1-692-881-41	s	SWITCH, SLIDE

(EQ-84/H BOARD [SUFFIX 13-] for RECORDER)

Ref. No. or Q'ty	Part No.	SP	Description
S201	1-692-881-41	s	SWITCH, SLIDE
S1100	1-572-473-11	s	SWITCH, TACTILE
TP100	1-535-877-22	s	CHIP,CHECKER (TEST POINT)
TP101	1-535-877-22	s	CHIP,CHECKER (TEST POINT)
TP102	1-535-877-22	s	CHIP,CHECKER (TEST POINT)
TP103	1-535-877-22	s	CHIP,CHECKER (TEST POINT)
TP104	1-535-877-22	s	CHIP,CHECKER (TEST POINT)
TP105	1-535-877-22	s	CHIP,CHECKER (TEST POINT)
TP106	1-535-877-22	s	CHIP,CHECKER (TEST POINT)
TP107	1-535-877-22	s	CHIP,CHECKER (TEST POINT)
TP108	1-535-877-22	s	CHIP,CHECKER (TEST POINT)
TP109 *M	1-535-877-22	s	CHIP,CHECKER (TEST POINT)
TP110	1-535-877-22	s	CHIP,CHECKER (TEST POINT)
TP111	1-535-877-22	s	CHIP,CHECKER (TEST POINT)
TP200	1-535-877-22	s	CHIP,CHECKER (TEST POINT)
TP201	1-535-877-22	s	CHIP,CHECKER (TEST POINT)
TP202	1-535-877-22	s	CHIP,CHECKER (TEST POINT)
TP300	1-535-877-22	s	CHIP,CHECKER (TEST POINT)
TP301	1-535-877-22	s	CHIP,CHECKER (TEST POINT)
TP302	1-535-877-22	s	CHIP,CHECKER (TEST POINT)
TP600	1-535-877-22	s	CHIP,CHECKER (TEST POINT)
TP601	1-535-877-22	s	CHIP,CHECKER (TEST POINT)
TP602	1-535-877-22	s	CHIP,CHECKER (TEST POINT)
TP700	1-535-877-22	s	CHIP,CHECKER (TEST POINT)
TP701	1-535-877-22	s	CHIP,CHECKER (TEST POINT)
TP1001	1-535-877-22	s	CHIP,CHECKER (TEST POINT)
TP1002	1-535-877-22	s	CHIP,CHECKER (TEST POINT)
TP1003	1-535-877-22	s	CHIP,CHECKER (TEST POINT)
TP1004	1-535-877-22	s	CHIP,CHECKER (TEST POINT)
TP1108	1-535-877-22	s	CHIP,CHECKER (TEST POINT)
TP1600	1-535-877-22	s	CHIP,CHECKER (TEST POINT)
TP1601	1-535-877-22	s	CHIP,CHECKER (TEST POINT)
TP1700	1-535-877-22	s	CHIP,CHECKER (TEST POINT)
TP1701	1-535-877-22	s	CHIP,CHECKER (TEST POINT)
X1100	1-767-464-11	s	VIBRATOR, CRYSTAL

EQ-84A/AH BOARD [SUFFIX 12] for PLAYER

---

*H: [Lot No. 261 - 385] HDW-M2100/P, A2100
*M: [Lot No. 261 - 385] MSW-M2100/P

Ref. No. or Q'ty	Part No.	SP	Description
1pc	*H A-8327-517-B	o	MOUNTED CIRCUIT BOARD, EQ-84AH
	*M A-8327-281-B	o	MOUNTED CIRCUIT BOARD, EQ-84A
2pcs	4-352-844-01	s	PIN, LEAD, COATING
1pc	3-179-084-11	s	LEVER(R),PRINTED C,BOARD
C100	1-164-156-11	s	CAPACITOR,CERAMIC 0.1MF/25V F
C101	1-164-156-11	s	CAPACITOR,CERAMIC 0.1MF/25V F
C102	1-131-661-11	s	CAPACITOR,ELECT 100MF/10V CHIP
C103	1-126-392-11	s	CAPACITOR,CHIP ELECT100MF/6.3V
C104	1-126-392-11	s	CAPACITOR,CHIP ELECT100MF/6.3V
C105	1-131-661-11	s	CAPACITOR,ELECT 100MF/10V CHIP
C106	1-164-156-11	s	CAPACITOR,CERAMIC 0.1MF/25V F
C107	1-164-156-11	s	CAPACITOR,CERAMIC 0.1MF/25V F
C108	1-164-156-11	s	CAPACITOR,CERAMIC 0.1MF/25V F
C109	1-164-156-11	s	CAPACITOR,CERAMIC 0.1MF/25V F
C110	1-164-156-11	s	CAPACITOR,CERAMIC 0.1MF/25V F
C215	1-164-156-11	s	CAPACITOR,CERAMIC 0.1MF/25V F
C216	1-164-156-11	s	CAPACITOR,CERAMIC 0.1MF/25V F
C217	1-164-156-11	s	CAPACITOR,CERAMIC 0.1MF/25V F
C218	1-164-156-11	s	CAPACITOR,CERAMIC 0.1MF/25V F
C219	1-126-391-11	s	CAPACITOR ELECT 47MF/6.3V(105)
C220	1-126-391-11	s	CAPACITOR ELECT 47MF/6.3V(105)
C221	1-164-156-11	s	CAPACITOR,CERAMIC 0.1MF/25V F
C222	1-164-156-11	s	CAPACITOR,CERAMIC 0.1MF/25V F
C600	1-164-156-11	s	CAPACITOR,CERAMIC 0.1MF/25V F
C601	1-164-156-11	s	CAPACITOR,CERAMIC 0.1MF/25V F
C602	1-164-156-11	s	CAPACITOR,CERAMIC 0.1MF/25V F
C603	1-164-156-11	s	CAPACITOR,CERAMIC 0.1MF/25V F
C604	1-164-156-11	s	CAPACITOR,CERAMIC 0.1MF/25V F
C605	1-164-156-11	s	CAPACITOR,CERAMIC 0.1MF/25V F
C606	1-164-156-11	s	CAPACITOR,CERAMIC 0.1MF/25V F
C607	1-162-919-11	s	CAPACITOR,CERAMIC 22PF/50V CH
C608	1-162-927-11	s	CAPACITOR,CERAMIC 100PF/50V CH
C609	1-164-156-11	s	CAPACITOR,CERAMIC 0.1MF/25V F
C610	1-164-156-11	s	CAPACITOR,CERAMIC 0.1MF/25V F
C611	1-164-156-11	s	CAPACITOR,CERAMIC 0.1MF/25V F
C612	1-164-156-11	s	CAPACITOR,CERAMIC 0.1MF/25V F
C613	1-164-156-11	s	CAPACITOR,CERAMIC 0.1MF/25V F
C614	1-164-156-11	s	CAPACITOR,CERAMIC 0.1MF/25V F
C616	1-164-156-11	s	CAPACITOR,CERAMIC 0.1MF/25V F
C618	1-164-156-11	s	CAPACITOR,CERAMIC 0.1MF/25V F
C619	1-164-156-11	s	CAPACITOR,CERAMIC 0.1MF/25V F
C620	1-162-921-11	s	CAPACITOR,CERAMIC 33PF/50V CH
C621	1-164-156-11	s	CAPACITOR,CERAMIC 0.1MF/25V F
C622	1-162-927-11	s	CAPACITOR,CERAMIC 100PF/50V CH
C623	1-162-970-11	s	CAPACITOR CERAMIC 0.01MF/25V B
C624	1-162-970-11	s	CAPACITOR CERAMIC 0.01MF/25V B
C625	1-164-156-11	s	CAPACITOR,CERAMIC 0.1MF/25V F
C626	1-164-156-11	s	CAPACITOR,CERAMIC 0.1MF/25V F
C627	1-164-156-11	s	CAPACITOR,CERAMIC 0.1MF/25V F
C628	1-164-156-11	s	CAPACITOR,CERAMIC 0.1MF/25V F
C629	1-164-156-11	s	CAPACITOR,CERAMIC 0.1MF/25V F
C630	1-126-391-11	s	CAPACITOR ELECT 47MF/6.3V(105)
C690	1-107-826-11	s	CAPACITOR,CHIP CERAMIC 0.1MF
C691	1-162-916-11	s	CAPACITOR,CERAMIC 12PF/50V CH
C692	1-107-826-11	s	CAPACITOR,CHIP CERAMIC 0.1MF
C700	1-164-156-11	s	CAPACITOR,CERAMIC 0.1MF/25V F

(EQ-84A/AH BOARD [SUFFIX 12] for PLAYER)

Ref. No. or Q'ty	Part No.	SP	Description
C701	1-164-156-11	s	CAPACITOR,CERAMIC 0.1MF/25V F
C702	1-164-156-11	s	CAPACITOR,CERAMIC 0.1MF/25V F
C703	1-164-156-11	s	CAPACITOR,CERAMIC 0.1MF/25V F
C704	1-164-156-11	s	CAPACITOR,CERAMIC 0.1MF/25V F
C705	1-164-156-11	s	CAPACITOR,CERAMIC 0.1MF/25V F
C706	1-162-919-11	s	CAPACITOR,CERAMIC 22PF/50V CH
C707	1-162-927-11	s	CAPACITOR,CERAMIC 100PF/50V CH
C708	1-164-156-11	s	CAPACITOR,CERAMIC 0.1MF/25V F
C709	1-164-156-11	s	CAPACITOR,CERAMIC 0.1MF/25V F
C711	1-164-156-11	s	CAPACITOR,CERAMIC 0.1MF/25V F
C712	1-164-156-11	s	CAPACITOR,CERAMIC 0.1MF/25V F
C713	1-164-156-11	s	CAPACITOR,CERAMIC 0.1MF/25V F
C714	1-162-921-11	s	CAPACITOR,CERAMIC 33PF/50V CH
C715	1-164-156-11	s	CAPACITOR,CERAMIC 0.1MF/25V F
C716	1-162-927-11	s	CAPACITOR,CERAMIC 100PF/50V CH
C717	1-162-970-11	s	CAPACITOR CERAMIC 0.01MF/25V B
C718	1-162-970-11	s	CAPACITOR CERAMIC 0.01MF/25V B
C719	1-164-156-11	s	CAPACITOR,CERAMIC 0.1MF/25V F
C720	1-164-156-11	s	CAPACITOR,CERAMIC 0.1MF/25V F
C721	1-164-156-11	s	CAPACITOR,CERAMIC 0.1MF/25V F
C722	1-164-156-11	s	CAPACITOR,CERAMIC 0.1MF/25V F
C723	1-164-156-11	s	CAPACITOR,CERAMIC 0.1MF/25V F
C724	1-126-391-11	s	CAPACITOR ELECT 47MF/6.3V(105)
C790	1-107-826-11	s	CAPACITOR,CHIP CERAMIC 0.1MF
C791	1-162-916-11	s	CAPACITOR,CERAMIC 12PF/50V CH
C792	1-107-826-11	s	CAPACITOR,CHIP CERAMIC 0.1MF
C930	1-164-156-11	s	CAPACITOR,CERAMIC 0.1MF/25V F
C1000	1-164-156-11	s	CAPACITOR,CERAMIC 0.1MF/25V F
C1001	1-164-156-11	s	CAPACITOR,CERAMIC 0.1MF/25V F
C1002	1-164-156-11	s	CAPACITOR,CERAMIC 0.1MF/25V F
C1003	1-164-156-11	s	CAPACITOR,CERAMIC 0.1MF/25V F
C1004	1-164-156-11	s	CAPACITOR,CERAMIC 0.1MF/25V F
C1005	1-164-156-11	s	CAPACITOR,CERAMIC 0.1MF/25V F
C1006	1-164-156-11	s	CAPACITOR,CERAMIC 0.1MF/25V F
C1007	1-164-156-11	s	CAPACITOR,CERAMIC 0.1MF/25V F
C1008	1-164-156-11	s	CAPACITOR,CERAMIC 0.1MF/25V F
C1009	1-164-156-11	s	CAPACITOR,CERAMIC 0.1MF/25V F
C1010	1-164-156-11	s	CAPACITOR,CERAMIC 0.1MF/25V F
C1011	1-164-156-11	s	CAPACITOR,CERAMIC 0.1MF/25V F
C1012	1-164-156-11	s	CAPACITOR,CERAMIC 0.1MF/25V F
C1013	1-164-156-11	s	CAPACITOR,CERAMIC 0.1MF/25V F
C1014	1-164-156-11	s	CAPACITOR,CERAMIC 0.1MF/25V F
C1015	1-164-156-11	s	CAPACITOR,CERAMIC 0.1MF/25V F
C1016	1-164-156-11	s	CAPACITOR,CERAMIC 0.1MF/25V F
C1017	1-162-970-11	s	CAPACITOR CERAMIC 0.01MF/25V B
C1018	1-162-970-11	s	CAPACITOR CERAMIC 0.01MF/25V B
C1031	1-164-156-11	s	CAPACITOR,CERAMIC 0.1MF/25V F
C1032	1-164-156-11	s	CAPACITOR,CERAMIC 0.1MF/25V F
C1033	1-164-156-11	s	CAPACITOR,CERAMIC 0.1MF/25V F
C1034	1-164-156-11	s	CAPACITOR,CERAMIC 0.1MF/25V F
C1035	1-162-970-11	s	CAPACITOR CERAMIC 0.01MF/25V B
C1036	1-164-156-11	s	CAPACITOR,CERAMIC 0.1MF/25V F
C1037	1-162-970-11	s	CAPACITOR CERAMIC 0.01MF/25V B
C1038	1-164-156-11	s	CAPACITOR,CERAMIC 0.1MF/25V F
C1039	1-164-156-11	s	CAPACITOR,CERAMIC 0.1MF/25V F
C1101	1-162-964-11	s	CAPACITOR,CERAMIC 1000PF/50V B
C1104	1-164-156-11	s	CAPACITOR,CERAMIC 0.1MF/25V F
C1105	1-164-315-11	s	CAPACITOR,CERAMIC 470PF/50V CH
C1107	1-162-964-11	s	CAPACITOR,CERAMIC 1000PF/50V B

(EQ-84A/AH BOARD [SUFFIX 12] for PLAYER)

Ref. No. or Q'ty	Part No.	SP	Description
C1109	1-164-315-11	s	CAPACITOR,CERAMIC 470PF/50V CH
C1111	1-162-964-11	s	CAPACITOR,CERAMIC 1000PF/50V B
C1114	1-164-156-11	s	CAPACITOR,CERAMIC 0.1MF/25V F
C1115	1-164-315-11	s	CAPACITOR,CERAMIC 470PF/50V CH
C1116	1-164-156-11	s	CAPACITOR,CERAMIC 0.1MF/25V F
C1117	1-164-156-11	s	CAPACITOR,CERAMIC 0.1MF/25V F
C1119	1-162-964-11	s	CAPACITOR,CERAMIC 1000PF/50V B
C1120	1-107-689-21	s	CAPACITOR,TANTALUM 1MF/35V
C1122	1-164-315-11	s	CAPACITOR,CERAMIC 470PF/50V CH
C1123	1-162-927-11	s	CAPACITOR,CERAMIC 100PF/50V CH
C1124	1-107-689-21	s	CAPACITOR,TANTALUM 1MF/35V
C1125	1-164-227-11	s	CAPACITOR,CERAMIC 0.022MF/25V
C1126	1-164-227-11	s	CAPACITOR,CERAMIC 0.022MF/25V
C1127	1-164-156-11	s	CAPACITOR,CERAMIC 0.1MF/25V F
C1128	1-164-156-11	s	CAPACITOR,CERAMIC 0.1MF/25V F
C1129	1-164-315-11	s	CAPACITOR,CERAMIC 470PF/50V CH
C1130	1-164-156-11	s	CAPACITOR,CERAMIC 0.1MF/25V F
C1131	1-162-915-11	s	CAPACITOR,CERAMIC 10PF/50V CH
C1132	1-162-915-11	s	CAPACITOR,CERAMIC 10PF/50V CH
C1133	1-164-156-11	s	CAPACITOR,CERAMIC 0.1MF/25V F
C1134	1-164-156-11	s	CAPACITOR,CERAMIC 0.1MF/25V F
C1135	1-164-156-11	s	CAPACITOR,CERAMIC 0.1MF/25V F
C1136	1-164-156-11	s	CAPACITOR,CERAMIC 0.1MF/25V F
C1137	1-164-156-11	s	CAPACITOR,CERAMIC 0.1MF/25V F
C1138	1-164-156-11	s	CAPACITOR,CERAMIC 0.1MF/25V F
C1139	1-164-156-11	s	CAPACITOR,CERAMIC 0.1MF/25V F
C1600	1-164-156-11	s	CAPACITOR,CERAMIC 0.1MF/25V F
C1601	1-164-156-11	s	CAPACITOR,CERAMIC 0.1MF/25V F
C1602	1-164-156-11	s	CAPACITOR,CERAMIC 0.1MF/25V F
C1603	1-164-156-11	s	CAPACITOR,CERAMIC 0.1MF/25V F
C1604	1-164-156-11	s	CAPACITOR,CERAMIC 0.1MF/25V F
C1605	1-164-156-11	s	CAPACITOR,CERAMIC 0.1MF/25V F
C1606	1-164-156-11	s	CAPACITOR,CERAMIC 0.1MF/25V F
C1607	1-162-919-11	s	CAPACITOR,CERAMIC 22PF/50V CH
C1608	1-162-927-11	s	CAPACITOR,CERAMIC 100PF/50V CH
C1609	1-164-156-11	s	CAPACITOR,CERAMIC 0.1MF/25V F
C1610	1-164-156-11	s	CAPACITOR,CERAMIC 0.1MF/25V F
C1611	1-164-156-11	s	CAPACITOR,CERAMIC 0.1MF/25V F
C1612	1-164-156-11	s	CAPACITOR,CERAMIC 0.1MF/25V F
C1613	1-164-156-11	s	CAPACITOR,CERAMIC 0.1MF/25V F
C1614	1-164-156-11	s	CAPACITOR,CERAMIC 0.1MF/25V F
C1616	1-164-156-11	s	CAPACITOR,CERAMIC 0.1MF/25V F
C1618	1-164-156-11	s	CAPACITOR,CERAMIC 0.1MF/25V F
C1620	1-164-156-11	s	CAPACITOR,CERAMIC 0.1MF/25V F
C1621	1-164-156-11	s	CAPACITOR,CERAMIC 0.1MF/25V F
C1622	1-162-921-11	s	CAPACITOR,CERAMIC 33PF/50V CH
C1623	1-164-156-11	s	CAPACITOR,CERAMIC 0.1MF/25V F
C1624	1-162-927-11	s	CAPACITOR,CERAMIC 100PF/50V CH
C1625	1-162-970-11	s	CAPACITOR CERAMIC 0.01MF/25V B
C1626	1-162-970-11	s	CAPACITOR CERAMIC 0.01MF/25V B
C1627	1-164-156-11	s	CAPACITOR,CERAMIC 0.1MF/25V F
C1628	1-164-156-11	s	CAPACITOR,CERAMIC 0.1MF/25V F
C1629	1-164-156-11	s	CAPACITOR,CERAMIC 0.1MF/25V F
C1690	1-107-826-11	s	CAPACITOR,CHIP CERAMIC 0.1MF
C1691	1-162-916-11	s	CAPACITOR,CERAMIC 12PF/50V CH
C1692	1-107-826-11	s	CAPACITOR,CHIP CERAMIC 0.1MF
C1700	1-164-156-11	s	CAPACITOR,CERAMIC 0.1MF/25V F
C1701	1-164-156-11	s	CAPACITOR,CERAMIC 0.1MF/25V F
C1702	1-164-156-11	s	CAPACITOR,CERAMIC 0.1MF/25V F

(EQ-84A/AH BOARD [SUFFIX 12] for PLAYER)

Ref. No. or Q'ty	Part No.	SP	Description
C1703	1-164-156-11	s	CAPACITOR,CERAMIC 0.1MF/25V F
C1704	1-164-156-11	s	CAPACITOR,CERAMIC 0.1MF/25V F
C1705	1-164-156-11	s	CAPACITOR,CERAMIC 0.1MF/25V F
C1706	1-162-919-11	s	CAPACITOR,CERAMIC 22PF/50V CH
C1707	1-162-927-11	s	CAPACITOR,CERAMIC 100PF/50V CH
C1708	1-164-156-11	s	CAPACITOR,CERAMIC 0.1MF/25V F
C1709	1-164-156-11	s	CAPACITOR,CERAMIC 0.1MF/25V F
C1711	1-164-156-11	s	CAPACITOR,CERAMIC 0.1MF/25V F
C1712	1-164-156-11	s	CAPACITOR,CERAMIC 0.1MF/25V F
C1713	1-164-156-11	s	CAPACITOR,CERAMIC 0.1MF/25V F
C1714	1-162-921-11	s	CAPACITOR,CERAMIC 33PF/50V CH
C1715	1-164-156-11	s	CAPACITOR,CERAMIC 0.1MF/25V F
C1716	1-162-927-11	s	CAPACITOR,CERAMIC 100PF/50V CH
C1717	1-162-970-11	s	CAPACITOR CERAMIC 0.01MF/25V B
C1718	1-162-970-11	s	CAPACITOR CERAMIC 0.01MF/25V B
C1719	1-164-156-11	s	CAPACITOR,CERAMIC 0.1MF/25V F
C1720	1-164-156-11	s	CAPACITOR,CERAMIC 0.1MF/25V F
C1721	1-164-156-11	s	CAPACITOR,CERAMIC 0.1MF/25V F
C1790	1-107-826-11	s	CAPACITOR,CHIP CERAMIC 0.1MF
C1791	1-162-916-11	s	CAPACITOR,CERAMIC 12PF/50V CH
C1792	1-107-826-11	s	CAPACITOR,CHIP CERAMIC 0.1MF
CN100	1-580-789-21	o	PIN,CONNECTOR (SMD) 6P
CN600	1-691-550-11	s	PIN,CONNECTOR (3P)(SMD)(1.5MM)
CN700	1-691-550-11	s	PIN,CONNECTOR (3P)(SMD)(1.5MM)
CN1100	1-580-756-21	o	PIN, CONNECTOR 7P
CN1600	1-691-550-11	s	PIN,CONNECTOR (3P)(SMD)(1.5MM)
CN1700	1-691-550-11	s	PIN,CONNECTOR (3P)(SMD)(1.5MM)
D1030	8-719-064-52	s	DIODE CL-191YG-CD-T
D1100	8-719-941-23	s	DIODE DA204U
D1101	8-719-941-23	s	DIODE DA204U
D1102	8-719-064-52	s	DIODE CL-191YG-CD-T
D1103	8-719-064-52	s	DIODE CL-191YG-CD-T
D1104	8-719-064-52	s	DIODE CL-191YG-CD-T
F100	⚠ 1-576-270-11	s	FUSE CHIP 4A/125V (6125)
F101	⚠ 1-576-270-11	s	FUSE CHIP 4A/125V (6125)
FL1030	1-239-898-22	s	FILTER, EMI (SMD)
FL1031	1-239-898-22	s	FILTER, EMI (SMD)
FL1032	1-239-898-22	s	FILTER, EMI (SMD)
FL1033	1-239-898-22	s	FILTER, EMI (SMD)
FL1034	1-239-898-22	s	FILTER, EMI (SMD)
FL1035	1-239-898-22	s	FILTER, EMI (SMD)
FL1036	1-239-898-22	s	FILTER, EMI (SMD)
FL1037	1-239-898-22	s	FILTER, EMI (SMD)
FL1038	1-239-898-22	s	FILTER, EMI (SMD)
FL1039	1-239-898-22	s	FILTER, EMI (SMD)
FL1040	1-239-898-22	s	FILTER, EMI (SMD)
FL1041	1-239-898-22	s	FILTER, EMI (SMD)
FL1042	1-239-898-22	s	FILTER, EMI (SMD)
FL1043	1-239-898-22	s	FILTER, EMI (SMD)
FL1044	1-239-898-22	s	FILTER, EMI (SMD)
FL1045	1-239-898-22	s	FILTER, EMI (SMD)
FL1046	1-239-898-22	s	FILTER, EMI (SMD)
FL1047	1-239-898-22	s	FILTER, EMI (SMD)
FL1048	1-239-898-22	s	FILTER, EMI (SMD)
IC100	8-759-653-05	o	IC XC9572-15TQ100C(M)
IC101	8-759-524-27	s	IC TC74VHC244FT(EL)

(EQ-84A/AH BOARD [SUFFIX 12] for PLAYER)

Ref. No. or Q'ty	Part No.	SP	Description
IC202	8-759-523-81	s	IC TC74VHC08FT(EL)
IC206	8-759-523-94	s	IC TC74VHC32FT(EL)
IC208	8-759-182-84	s	IC PQ05SZ5U
IC209	8-759-539-89	s	IC LM2990SX-5.0
IC600	8-752-106-24	s	IC CXA3550R
IC601	8-759-112-53	s	IC UPC1663G
IC602	8-759-182-84	s	IC PQ05SZ5U
IC700	8-752-106-24	s	IC CXA3550R
IC701	8-759-182-84	s	IC PQ05SZ5U
IC901	8-759-392-77	s	IC SN74LVC245APW (E20)
IC1000	8-759-640-94	o	IC CXD9096R
IC1001	8-759-392-77	s	IC SN74LVC245APW (E20)
IC1030	8-759-523-95	s	IC TC74VHC74FT(EL)
IC1031	8-759-523-94	s	IC TC74VHC32FT(EL)
IC1032	8-759-392-77	s	IC SN74LVC245APW (E20)
IC1033	8-759-392-77	s	IC SN74LVC245APW (E20)
IC1034	8-759-524-09	s	IC TC74VHC153FT (EL)
IC1035	8-759-337-40	s	IC NJM2904V(TE2)
IC1101	8-759-337-40	s	IC NJM2904V(TE2)
IC1103	8-759-337-40	s	IC NJM2904V(TE2)
IC1104	8-759-524-27	s	IC TC74VHC244FT(EL)
IC1105	8-759-491-50	s	IC TC74VHCT244AFT(EL)
IC1106	8-759-523-81	s	IC TC74VHC08FT(EL)
IC1107	8-759-523-00	s	IC TC74HC4051AFT(EL)
IC1108	8-759-491-46	s	IC TC74VHCT04AFT (EL)
IC1109	8-759-337-40	s	IC NJM2904V(TE2)
IC1110	8-759-670-06	s	IC NM24C16ULEM8X
IC1111	8-759-670-06	s	IC NM24C16ULEM8X
IC1112	8-759-523-02	s	IC TC74HC4053AFT(EL)
IC1113*H	8-759-538-30	s	IC HD64F3437TFLH16
*M	6-801-811-01	s	IC HD6433437WV32XV
IC1114	8-759-337-40	s	IC NJM2904V(TE2)
IC1115	8-759-337-40	s	IC NJM2904V(TE2)
IC1600	8-752-106-24	s	IC CXA3550R
IC1601	8-759-112-53	s	IC UPC1663G
IC1700	8-752-106-24	s	IC CXA3550R
L100	1-416-344-11	s	COIL, CHOKE 10UH
L101	1-416-344-11	s	COIL, CHOKE 10UH
L102	1-416-344-11	s	COIL, CHOKE 10UH
L103	1-416-344-11	s	COIL, CHOKE 10UH
L690	1-408-766-21	s	CHIP INDUCTOR 1.2UH (4532)
L790	1-408-766-21	s	CHIP INDUCTOR 1.2UH (4532)
L1690	1-408-766-21	s	CHIP INDUCTOR 1.2UH (4532)
L1790	1-408-766-21	s	CHIP INDUCTOR 1.2UH (4532)
Q600	8-729-117-32	s	TRANSISTOR 2SC4177
Q690	8-729-143-13	s	TRANSISTOR 2SC4176-B34
Q691	8-729-143-07	s	TRANSISTOR 2SA1610-Y33
Q700	8-729-029-14	s	TRANSISTOR DTC144EUA-T106
Q701	8-729-143-07	s	TRANSISTOR 2SA1610-Y33
Q702	8-729-143-07	s	TRANSISTOR 2SA1610-Y33
Q790	8-729-143-13	s	TRANSISTOR 2SC4176-B34
Q791	8-729-143-07	s	TRANSISTOR 2SA1610-Y33
Q1100	8-729-029-09	s	TRANSISTOR DTC143EUA-T106
Q1101	8-729-039-35	s	TRANSISTOR SI9435DY-T1
Q1102	8-729-029-09	s	TRANSISTOR DTC143EUA-T106
Q1103	8-729-029-09	s	TRANSISTOR DTC143EUA-T106
Q1104	8-729-029-09	s	TRANSISTOR DTC143EUA-T106
Q1105	8-729-029-09	s	TRANSISTOR DTC143EUA-T106
Q1600	8-729-117-32	s	TRANSISTOR 2SC4177

(EQ-84A/AH BOARD [SUFFIX 12] for PLAYER)

Ref. No. or Q'ty	Part No.	SP	Description
Q1690	8-729-143-13	s	TRANSISTOR 2SC4176-B34
Q1691	8-729-143-07	s	TRANSISTOR 2SA1610-Y33
Q1700	8-729-029-14	s	TRANSISTOR DTC144EUA-T106
Q1701	8-729-143-07	s	TRANSISTOR 2SA1610-Y33
Q1702	8-729-143-07	s	TRANSISTOR 2SA1610-Y33
Q1790	8-729-143-13	s	TRANSISTOR 2SC4176-B34
Q1791	8-729-143-07	s	TRANSISTOR 2SA1610-Y33
R100	1-218-716-11	s	RESISTOR,CHIP 10K 1/16W(1608)
R101	1-218-716-11	s	RESISTOR,CHIP 10K 1/16W(1608)
R102	1-218-716-11	s	RESISTOR,CHIP 10K 1/16W(1608)
R103	1-218-716-11	s	RESISTOR,CHIP 10K 1/16W(1608)
R104	1-218-716-11	s	RESISTOR,CHIP 10K 1/16W(1608)
R105	1-218-716-11	s	RESISTOR,CHIP 10K 1/16W(1608)
R106	1-218-716-11	s	RESISTOR,CHIP 10K 1/16W(1608)
R107	1-218-716-11	s	RESISTOR,CHIP 10K 1/16W(1608)
R108	1-218-716-11	s	RESISTOR,CHIP 10K 1/16W(1608)
R109	1-218-716-11	s	RESISTOR,CHIP 10K 1/16W(1608)
R110	1-218-716-11	s	RESISTOR,CHIP 10K 1/16W(1608)
R111	1-218-716-11	s	RESISTOR,CHIP 10K 1/16W(1608)
R112	1-218-692-11	s	RESISTOR,CHIP 1.0K 1/16W(1608)
R113	1-218-692-11	s	RESISTOR,CHIP 1.0K 1/16W(1608)
R114	1-218-692-11	s	RESISTOR,CHIP 1.0K 1/16W(1608)
R115	1-218-692-11	s	RESISTOR,CHIP 1.0K 1/16W(1608)
R116	1-218-692-11	s	RESISTOR,CHIP 1.0K 1/16W(1608)
R117	1-218-692-11	s	RESISTOR,CHIP 1.0K 1/16W(1608)
R118	1-218-692-11	s	RESISTOR,CHIP 1.0K 1/16W(1608)
R119	1-218-692-11	s	RESISTOR,CHIP 1.0K 1/16W(1608)
R120	1-218-692-11	s	RESISTOR,CHIP 1.0K 1/16W(1608)
R121	1-218-692-11	s	RESISTOR,CHIP 1.0K 1/16W(1608)
R122	1-218-692-11	s	RESISTOR,CHIP 1.0K 1/16W(1608)
R123	1-218-692-11	s	RESISTOR,CHIP 1.0K 1/16W(1608)
R125	1-216-864-11	s	RESISTOR,CHIP 0 1/16W (1608)
R126	1-216-864-11	s	RESISTOR,CHIP 0 1/16W (1608)
R128	1-218-716-11	s	RESISTOR,CHIP 10K 1/16W(1608)
R129	1-218-716-11	s	RESISTOR,CHIP 10K 1/16W(1608)
R130	1-218-716-11	s	RESISTOR,CHIP 10K 1/16W(1608)
R131	1-218-716-11	s	RESISTOR,CHIP 10K 1/16W(1608)
R132	1-218-716-11	s	RESISTOR,CHIP 10K 1/16W(1608)
R133	1-218-696-11	s	RESISTOR,CHIP 1.5K 1/16W(1608)
R134	1-218-696-11	s	RESISTOR,CHIP 1.5K 1/16W(1608)
R135	1-218-716-11	s	RESISTOR,CHIP 10K 1/16W(1608)
R136	1-218-716-11	s	RESISTOR,CHIP 10K 1/16W(1608)
R137	1-218-676-11	s	RESISTOR,CHIP 220 1/16W(1608)
R138	1-218-676-11	s	RESISTOR,CHIP 220 1/16W(1608)
R139	1-218-716-11	s	RESISTOR,CHIP 10K 1/16W(1608)
R224	1-218-716-11	s	RESISTOR,CHIP 10K 1/16W(1608)
R225	1-218-716-11	s	RESISTOR,CHIP 10K 1/16W(1608)
R226	1-218-716-11	s	RESISTOR,CHIP 10K 1/16W(1608)
R227	1-218-716-11	s	RESISTOR,CHIP 10K 1/16W(1608)
R259	1-218-740-11	s	RESISTOR,CHIP 100K 1/16W(1608)
R260	1-218-740-11	s	RESISTOR,CHIP 100K 1/16W(1608)
R262	1-218-692-11	s	RESISTOR,CHIP 1.0K 1/16W(1608)
R263	1-218-692-11	s	RESISTOR,CHIP 1.0K 1/16W(1608)
R600	1-218-644-11	s	RESISTOR,CHIP 10 1/16W
R601	1-218-644-11	s	RESISTOR,CHIP 10 1/16W
R602	1-218-723-11	s	RESISTOR,CHIP 20K 1/16W(1608)
R603	1-218-692-11	s	RESISTOR,CHIP 1.0K 1/16W(1608)
R604	1-218-692-11	s	RESISTOR,CHIP 1.0K 1/16W(1608)

(EQ-84A/AH BOARD [SUFFIX 12] for PLAYER)

Ref. No. or Q'ty	Part No.	SP	Description
R605	1-218-692-11	s	RESISTOR,CHIP 1.0K 1/16W(1608)
R606	1-218-686-11	s	RESISTOR CHIP 560 1/16W (1608)
R607	1-218-692-11	s	RESISTOR,CHIP 1.0K 1/16W(1608)
R608	1-218-692-11	s	RESISTOR,CHIP 1.0K 1/16W(1608)
R609	1-218-692-11	s	RESISTOR,CHIP 1.0K 1/16W(1608)
R611	1-218-704-11	s	RESISTOR,CHIP 3.3K 1/16W(1608)
R612	1-218-660-91	s	RESISTOR,CHIP 47 1/16W (1608)
R613	1-218-716-11	s	RESISTOR,CHIP 10K 1/16W(1608)
R614	1-218-716-11	s	RESISTOR,CHIP 10K 1/16W(1608)
R615	1-218-727-11	s	RESISTOR,CHIP 30K 1/16W(1608)
R616	1-218-722-11	s	RESISTOR, CHIP 18K 1/16W 1608
R621	1-218-668-11	s	RESISTOR,CHIP 100 1/16W (1608)
R622	1-218-699-11	s	RESISTOR,CHIP 2.0K 1/16W(1608)
R623	1-218-692-11	s	RESISTOR,CHIP 1.0K 1/16W(1608)
R624	1-218-724-11	s	RESISTOR,CHIP 22K 1/16W(1608)
R631	1-216-864-11	s	RESISTOR,CHIP 0 1/16W (1608)
R633	1-216-864-11	s	RESISTOR,CHIP 0 1/16W (1608)
R634	1-216-864-11	s	RESISTOR,CHIP 0 1/16W (1608)
R690	1-218-676-11	s	RESISTOR,CHIP 220 1/16W(1608)
R691	1-218-675-11	s	RESISTOR,CHIP 200 1/16W (1608)
R692	1-218-686-11	s	RESISTOR CHIP 560 1/16W (1608)
R693	1-218-692-11	s	RESISTOR,CHIP 1.0K 1/16W(1608)
R700	1-218-700-11	s	RESISTOR,CHIP 2.2K 1/16W(1608)
R701	1-218-644-11	s	RESISTOR,CHIP 10 1/16W
R702	1-218-700-11	s	RESISTOR,CHIP 2.2K 1/16W(1608)
R703	1-218-644-11	s	RESISTOR,CHIP 10 1/16W
R704	1-218-723-11	s	RESISTOR,CHIP 20K 1/16W(1608)
R705	1-218-686-11	s	RESISTOR CHIP 560 1/16W (1608)
R706	1-218-692-11	s	RESISTOR,CHIP 1.0K 1/16W(1608)
R707	1-218-716-11	s	RESISTOR,CHIP 10K 1/16W(1608)
R708	1-218-716-11	s	RESISTOR,CHIP 10K 1/16W(1608)
R709	1-218-727-11	s	RESISTOR,CHIP 30K 1/16W(1608)
R710	1-218-722-11	s	RESISTOR, CHIP 18K 1/16W 1608
R715	1-218-668-11	s	RESISTOR,CHIP 100 1/16W (1608)
R716	1-218-699-11	s	RESISTOR,CHIP 2.0K 1/16W(1608)
R717	1-218-692-11	s	RESISTOR,CHIP 1.0K 1/16W(1608)
R718	1-218-724-11	s	RESISTOR,CHIP 22K 1/16W(1608)
R725	1-216-864-11	s	RESISTOR,CHIP 0 1/16W (1608)
R727	1-218-660-91	s	RESISTOR,CHIP 47 1/16W (1608)
R728	1-218-660-91	s	RESISTOR,CHIP 47 1/16W (1608)
R790	1-218-676-11	s	RESISTOR,CHIP 220 1/16W(1608)
R791	1-218-675-11	s	RESISTOR,CHIP 200 1/16W (1608)
R792	1-218-686-11	s	RESISTOR CHIP 560 1/16W (1608)
R793	1-218-692-11	s	RESISTOR,CHIP 1.0K 1/16W(1608)
R1000	1-218-732-11	s	RESISTOR,CHIP 47K 1/16W(1608)
R1001	1-218-732-11	s	RESISTOR,CHIP 47K 1/16W(1608)
R1002	1-218-728-11	s	RESISTOR,CHIP 33K 1/16W
R1003	1-218-728-11	s	RESISTOR,CHIP 33K 1/16W
R1004	1-218-668-11	s	RESISTOR,CHIP 100 1/16W (1608)
R1005	1-216-864-11	s	RESISTOR,CHIP 0 1/16W (1608)
R1006	1-218-692-11	s	RESISTOR,CHIP 1.0K 1/16W(1608)
R1030	1-218-740-11	s	RESISTOR,CHIP 100K 1/16W(1608)
R1031	1-218-676-11	s	RESISTOR,CHIP 220 1/16W(1608)
R1032	1-218-740-11	s	RESISTOR,CHIP 100K 1/16W(1608)
R1033	1-218-740-11	s	RESISTOR,CHIP 100K 1/16W(1608)
R1034	1-218-692-11	s	RESISTOR,CHIP 1.0K 1/16W(1608)
R1035	1-218-692-11	s	RESISTOR,CHIP 1.0K 1/16W(1608)
R1036	1-218-660-91	s	RESISTOR,CHIP 47 1/16W (1608)
R1037	1-218-680-11	s	RESISTOR,CHIP 330 1/16W(1608)

(EQ-84A/AH BOARD [SUFFIX 12] for PLAYER)

Ref. No. or Q'ty	Part No.	SP	Description
R1038	1-218-674-11	s	RESISTOR CHIP 180 1/16W (1608)
R1039	1-218-692-11	s	RESISTOR,CHIP 1.0K 1/16W(1608)
R1040	1-218-680-11	s	RESISTOR,CHIP 330 1/16W(1608)
R1041	1-216-864-11	s	RESISTOR,CHIP 0 1/16W (1608)
R1042	1-216-864-11	s	RESISTOR,CHIP 0 1/16W (1608)
R1043	1-216-864-11	s	RESISTOR,CHIP 0 1/16W (1608)
R1044	1-216-864-11	s	RESISTOR,CHIP 0 1/16W (1608)
R1045	1-216-864-11	s	RESISTOR,CHIP 0 1/16W (1608)
R1046	1-216-864-11	s	RESISTOR,CHIP 0 1/16W (1608)
R1047	1-216-864-11	s	RESISTOR,CHIP 0 1/16W (1608)
R1048	1-216-864-11	s	RESISTOR,CHIP 0 1/16W (1608)
R1049	1-216-864-11	s	RESISTOR,CHIP 0 1/16W (1608)
R1050	1-216-864-11	s	RESISTOR,CHIP 0 1/16W (1608)
R1051	1-216-864-11	s	RESISTOR,CHIP 0 1/16W (1608)
R1052	1-216-864-11	s	RESISTOR,CHIP 0 1/16W (1608)
R1053	1-216-864-11	s	RESISTOR,CHIP 0 1/16W (1608)
R1054	1-218-727-11	s	RESISTOR,CHIP 30K 1/16W(1608)
R1055	1-218-727-11	s	RESISTOR,CHIP 30K 1/16W(1608)
R1056	1-218-727-11	s	RESISTOR,CHIP 30K 1/16W(1608)
R1057	1-218-727-11	s	RESISTOR,CHIP 30K 1/16W(1608)
R1101	1-218-728-11	s	RESISTOR,CHIP 33K 1/16W
R1103	1-218-732-11	s	RESISTOR,CHIP 47K 1/16W(1608)
R1105	1-218-728-11	s	RESISTOR,CHIP 33K 1/16W
R1107	1-218-732-11	s	RESISTOR,CHIP 47K 1/16W(1608)
R1109	1-218-728-11	s	RESISTOR,CHIP 33K 1/16W
R1111	1-218-732-11	s	RESISTOR,CHIP 47K 1/16W(1608)
R1112	1-218-732-11	s	RESISTOR,CHIP 47K 1/16W(1608)
R1113	1-218-740-11	s	RESISTOR,CHIP 100K 1/16W(1608)
R1114	1-218-740-11	s	RESISTOR,CHIP 100K 1/16W(1608)
R1115	1-218-740-11	s	RESISTOR,CHIP 100K 1/16W(1608)
R1116	1-218-740-11	s	RESISTOR,CHIP 100K 1/16W(1608)
R1118	1-218-728-11	s	RESISTOR,CHIP 33K 1/16W
R1119	1-218-740-11	s	RESISTOR,CHIP 100K 1/16W(1608)
R1120	1-218-740-11	s	RESISTOR,CHIP 100K 1/16W(1608)
R1121	1-218-740-11	s	RESISTOR,CHIP 100K 1/16W(1608)
R1122	1-218-668-11	s	RESISTOR,CHIP 100 1/16W (1608)
R1123	1-218-668-11	s	RESISTOR,CHIP 100 1/16W (1608)
R1124	1-218-668-11	s	RESISTOR,CHIP 100 1/16W (1608)
R1125	1-218-668-11	s	RESISTOR,CHIP 100 1/16W (1608)
R1126	1-218-668-11	s	RESISTOR,CHIP 100 1/16W (1608)
R1127	1-218-668-11	s	RESISTOR,CHIP 100 1/16W (1608)
R1128	1-218-668-11	s	RESISTOR,CHIP 100 1/16W (1608)
R1129	1-218-668-11	s	RESISTOR,CHIP 100 1/16W (1608)
R1130	1-218-692-11	s	RESISTOR,CHIP 1.0K 1/16W(1608)
R1131	1-218-716-11	s	RESISTOR,CHIP 10K 1/16W(1608)
R1133	1-218-732-11	s	RESISTOR,CHIP 47K 1/16W(1608)
R1134	1-218-716-11	s	RESISTOR,CHIP 10K 1/16W(1608)
R1135	1-218-740-11	s	RESISTOR,CHIP 100K 1/16W(1608)
R1136	1-218-716-11	s	RESISTOR,CHIP 10K 1/16W(1608)
R1137	1-218-740-11	s	RESISTOR,CHIP 100K 1/16W(1608)
R1138	1-218-716-11	s	RESISTOR,CHIP 10K 1/16W(1608)
R1141	1-216-864-11	s	RESISTOR,CHIP 0 1/16W (1608)
R1142	1-216-864-11	s	RESISTOR,CHIP 0 1/16W (1608)
R1143	1-218-692-11	s	RESISTOR,CHIP 1.0K 1/16W(1608)
R1144	1-218-692-11	s	RESISTOR,CHIP 1.0K 1/16W(1608)
R1145	1-218-692-11	s	RESISTOR,CHIP 1.0K 1/16W(1608)
R1146	1-218-692-11	s	RESISTOR,CHIP 1.0K 1/16W(1608)
R1147	1-218-692-11	s	RESISTOR,CHIP 1.0K 1/16W(1608)
R1148	1-218-716-11	s	RESISTOR,CHIP 10K 1/16W(1608)

(EQ-84A/AH BOARD [SUFFIX 12] for PLAYER)

Ref. No. or Q'ty	Part No.	SP	Description
R1149	1-218-716-11	s	RESISTOR,CHIP 10K 1/16W(1608)
R1150	1-218-716-11	s	RESISTOR,CHIP 10K 1/16W(1608)
R1151	1-218-740-11	s	RESISTOR,CHIP 100K 1/16W(1608)
R1152	1-218-716-11	s	RESISTOR,CHIP 10K 1/16W(1608)
R1153	1-218-740-11	s	RESISTOR,CHIP 100K 1/16W(1608)
R1154	1-218-740-11	s	RESISTOR,CHIP 100K 1/16W(1608)
R1155	1-218-740-11	s	RESISTOR,CHIP 100K 1/16W(1608)
R1159	1-218-680-11	s	RESISTOR,CHIP 330 1/16W(1608)
R1160	1-218-680-11	s	RESISTOR,CHIP 330 1/16W(1608)
R1161	1-218-668-11	s	RESISTOR,CHIP 100 1/16W (1608)
R1162	1-218-692-11	s	RESISTOR,CHIP 1.0K 1/16W(1608)
R1163	1-218-692-11	s	RESISTOR,CHIP 1.0K 1/16W(1608)
R1164	1-218-716-11	s	RESISTOR,CHIP 10K 1/16W(1608)
R1165	1-218-680-11	s	RESISTOR,CHIP 330 1/16W(1608)
R1166	1-218-732-11	s	RESISTOR,CHIP 47K 1/16W(1608)
R1167	1-218-668-11	s	RESISTOR,CHIP 100 1/16W (1608)
R1168	1-218-668-11	s	RESISTOR,CHIP 100 1/16W (1608)
R1169	1-218-668-11	s	RESISTOR,CHIP 100 1/16W (1608)
R1170	1-218-668-11	s	RESISTOR,CHIP 100 1/16W (1608)
R1171	1-218-724-11	s	RESISTOR,CHIP 22K 1/16W(1608)
R1172	1-218-724-11	s	RESISTOR,CHIP 22K 1/16W(1608)
R1173	1-218-724-11	s	RESISTOR,CHIP 22K 1/16W(1608)
R1174	1-218-724-11	s	RESISTOR,CHIP 22K 1/16W(1608)
R1175	1-218-728-11	s	RESISTOR,CHIP 33K 1/16W
R1176	1-218-728-11	s	RESISTOR,CHIP 33K 1/16W
R1177	1-218-728-11	s	RESISTOR,CHIP 33K 1/16W
R1178	1-218-728-11	s	RESISTOR,CHIP 33K 1/16W
R1600	1-218-644-11	s	RESISTOR,CHIP 10 1/16W
R1601	1-218-644-11	s	RESISTOR,CHIP 10 1/16W
R1602	1-218-723-11	s	RESISTOR,CHIP 20K 1/16W(1608)
R1603	1-218-692-11	s	RESISTOR,CHIP 1.0K 1/16W(1608)
R1604	1-218-692-11	s	RESISTOR,CHIP 1.0K 1/16W(1608)
R1605	1-218-692-11	s	RESISTOR,CHIP 1.0K 1/16W(1608)
R1606	1-218-686-11	s	RESISTOR CHIP 560 1/16W (1608)
R1607	1-218-692-11	s	RESISTOR,CHIP 1.0K 1/16W(1608)
R1608	1-218-692-11	s	RESISTOR,CHIP 1.0K 1/16W(1608)
R1609	1-218-692-11	s	RESISTOR,CHIP 1.0K 1/16W(1608)
R1611	1-218-704-11	s	RESISTOR,CHIP 3.3K 1/16W(1608)
R1612	1-218-716-11	s	RESISTOR,CHIP 10K 1/16W(1608)
R1613	1-218-660-91	s	RESISTOR,CHIP 47 1/16W (1608)
R1614	1-218-660-91	s	RESISTOR,CHIP 47 1/16W (1608)
R1615	1-218-716-11	s	RESISTOR,CHIP 10K 1/16W(1608)
R1616	1-218-727-11	s	RESISTOR,CHIP 30K 1/16W(1608)
R1617	1-218-722-11	s	RESISTOR, CHIP 18K 1/16W 1608
R1622	1-218-668-11	s	RESISTOR,CHIP 100 1/16W (1608)
R1623	1-218-699-11	s	RESISTOR,CHIP 2.0K 1/16W(1608)
R1624	1-218-692-11	s	RESISTOR,CHIP 1.0K 1/16W(1608)
R1625	1-218-724-11	s	RESISTOR,CHIP 22K 1/16W(1608)
R1632	1-216-864-11	s	RESISTOR,CHIP 0 1/16W (1608)
R1634	1-216-864-11	s	RESISTOR,CHIP 0 1/16W (1608)
R1635	1-216-864-11	s	RESISTOR,CHIP 0 1/16W (1608)
R1690	1-218-676-11	s	RESISTOR,CHIP 220 1/16W(1608)
R1691	1-218-675-11	s	RESISTOR,CHIP 200 1/16W (1608)
R1692	1-218-686-11	s	RESISTOR CHIP 560 1/16W (1608)
R1693	1-218-692-11	s	RESISTOR,CHIP 1.0K 1/16W(1608)
R1700	1-218-700-11	s	RESISTOR,CHIP 2.2K 1/16W(1608)
R1701	1-218-644-11	s	RESISTOR,CHIP 10 1/16W
R1702	1-218-700-11	s	RESISTOR,CHIP 2.2K 1/16W(1608)
R1703	1-218-644-11	s	RESISTOR,CHIP 10 1/16W

(EQ-84A/AH BOARD [SUFFIX 12] for PLAYER)

Ref. No. or Q'ty	Part No.	SP	Description
R1704	1-218-723-11	s	RESISTOR,CHIP 20K 1/16W(1608)
R1705	1-218-686-11	s	RESISTOR CHIP 560 1/16W (1608)
R1706	1-218-692-11	s	RESISTOR,CHIP 1.0K 1/16W(1608)
R1707	1-218-716-11	s	RESISTOR,CHIP 10K 1/16W(1608)
R1708	1-218-716-11	s	RESISTOR,CHIP 10K 1/16W(1608)
R1709	1-218-727-11	s	RESISTOR,CHIP 30K 1/16W(1608)
R1710	1-218-722-11	s	RESISTOR, CHIP 18K 1/16W 1608
R1715	1-218-668-11	s	RESISTOR,CHIP 100 1/16W (1608)
R1716	1-218-699-11	s	RESISTOR,CHIP 2.0K 1/16W(1608)
R1717	1-218-692-11	s	RESISTOR,CHIP 1.0K 1/16W(1608)
R1718	1-218-724-11	s	RESISTOR,CHIP 22K 1/16W(1608)
R1725	1-216-864-11	s	RESISTOR,CHIP 0 1/16W (1608)
R1727	1-218-660-91	s	RESISTOR,CHIP 47 1/16W (1608)
R1728	1-218-660-91	s	RESISTOR,CHIP 47 1/16W (1608)
R1790	1-218-676-11	s	RESISTOR,CHIP 220 1/16W(1608)
R1791	1-218-675-11	s	RESISTOR,CHIP 200 1/16W (1608)
R1792	1-218-686-11	s	RESISTOR CHIP 560 1/16W (1608)
R1793	1-218-692-11	s	RESISTOR,CHIP 1.0K 1/16W(1608)
S1100	1-572-473-11	s	SWITCH, TACTIL
X1100	1-767-464-11	s	VIBRATOR, CRYSTAL

EQ-84A/AH BOARD [SUFFIX 13-] for PLAYER

*H: [Lot No. 391 -] HDW-M2100/P, A2100
*M: [Lot No. 391 -] MSW-M2100/P
[Lot No. 495 -] MSW-M2100E/P

Ref. No. or Q'ty	Part No.	SP	Description
1pc	A-8327-517-C	s	MOUNTED CIRCUIT BOARD, EQ-84AH
	A-8327-281-C	s	MOUNTED CIRCUIT BOARD, EQ-84A
2pcs	4-352-844-01	s	PIN, LEAD, COATING
1pc	3-179-084-11	s	LEVER(R),PRINTED C,BOARD
C100	1-107-826-11	s	CAPACITOR,CHIP CERAMIC 0.1MF
C101	1-107-826-11	s	CAPACITOR,CHIP CERAMIC 0.1MF
C102	1-131-661-11	s	CAPACITOR,ELECT 100MF/10V CHIP
C103	1-131-661-11	s	CAPACITOR,ELECT 100MF/10V CHIP
C104	1-131-661-11	s	CAPACITOR,ELECT 100MF/10V CHIP
C105	1-131-661-11	s	CAPACITOR,ELECT 100MF/10V CHIP
C106	1-107-826-11	s	CAPACITOR,CHIP CERAMIC 0.1MF
C107	1-107-826-11	s	CAPACITOR,CHIP CERAMIC 0.1MF
C108	1-107-826-11	s	CAPACITOR,CHIP CERAMIC 0.1MF
C109	1-107-826-11	s	CAPACITOR,CHIP CERAMIC 0.1MF
C110	1-107-826-11	s	CAPACITOR,CHIP CERAMIC 0.1MF
C215	1-107-826-11	s	CAPACITOR,CHIP CERAMIC 0.1MF
C216	1-107-826-11	s	CAPACITOR,CHIP CERAMIC 0.1MF
C217	1-107-826-11	s	CAPACITOR,CHIP CERAMIC 0.1MF
C218	1-107-826-11	s	CAPACITOR,CHIP CERAMIC 0.1MF
C219	1-100-276-21	s	CAP, ELECT 22MF (5.0X6.5)
C220	1-100-276-21	s	CAP, ELECT 22MF (5.0X6.5)
C221	1-107-826-11	s	CAPACITOR,CHIP CERAMIC 0.1MF
C222	1-107-826-11	s	CAPACITOR,CHIP CERAMIC 0.1MF
C227	1-162-970-11	s	CAPACITOR CERAMIC 0.01MF/25V B
C600	1-107-826-11	s	CAPACITOR,CHIP CERAMIC 0.1MF
C601	1-107-826-11	s	CAPACITOR,CHIP CERAMIC 0.1MF
C602	1-107-826-11	s	CAPACITOR,CHIP CERAMIC 0.1MF
C603	1-107-826-11	s	CAPACITOR,CHIP CERAMIC 0.1MF
C604	1-107-826-11	s	CAPACITOR,CHIP CERAMIC 0.1MF
C605	1-107-826-11	s	CAPACITOR,CHIP CERAMIC 0.1MF
C606	1-107-826-11	s	CAPACITOR,CHIP CERAMIC 0.1MF
C607	1-162-919-11	s	CAPACITOR,CERAMIC 22PF/50V CH
C608	1-162-927-11	s	CAPACITOR,CERAMIC 100PF/50V CH
C609	1-107-826-11	s	CAPACITOR,CHIP CERAMIC 0.1MF
C610	1-162-970-11	s	CAPACITOR CERAMIC 0.01MF/25V B
C611	1-162-970-11	s	CAPACITOR CERAMIC 0.01MF/25V B
C612	1-107-826-11	s	CAPACITOR,CHIP CERAMIC 0.1MF
C613	1-107-826-11	s	CAPACITOR,CHIP CERAMIC 0.1MF
C616	1-107-826-11	s	CAPACITOR,CHIP CERAMIC 0.1MF
C618	1-107-826-11	s	CAPACITOR,CHIP CERAMIC 0.1MF
C619	1-107-826-11	s	CAPACITOR,CHIP CERAMIC 0.1MF
C620	1-162-921-11	s	CAPACITOR,CERAMIC 33PF/50V CH
C621	1-107-826-11	s	CAPACITOR,CHIP CERAMIC 0.1MF
C622	1-162-927-11	s	CAPACITOR,CERAMIC 100PF/50V CH
C623	1-162-970-11	s	CAPACITOR CERAMIC 0.01MF/25V B
C624	1-162-970-11	s	CAPACITOR CERAMIC 0.01MF/25V B
C625	1-107-826-11	s	CAPACITOR,CHIP CERAMIC 0.1MF
C626	1-107-826-11	s	CAPACITOR,CHIP CERAMIC 0.1MF
C627	1-107-826-11	s	CAPACITOR,CHIP CERAMIC 0.1MF
C628	1-107-826-11	s	CAPACITOR,CHIP CERAMIC 0.1MF
C629	1-107-826-11	s	CAPACITOR,CHIP CERAMIC 0.1MF
C630	1-100-276-21	s	CAP, ELECT 22MF (5.0X6.5)
C690	1-107-826-11	s	CAPACITOR,CHIP CERAMIC 0.1MF
C691	1-162-916-11	s	CAPACITOR,CERAMIC 12PF/50V CH
C692	1-107-826-11	s	CAPACITOR,CHIP CERAMIC 0.1MF
C700	1-107-826-11	s	CAPACITOR,CHIP CERAMIC 0.1MF

(EQ-84A/AH BOARD [SUFFIX 13-] for PLAYER)

Ref. No. or Q'ty	Part No.	SP	Description
C701	1-107-826-11	s	CAPACITOR,CHIP CERAMIC 0.1MF
C702	1-107-826-11	s	CAPACITOR,CHIP CERAMIC 0.1MF
C703	1-107-826-11	s	CAPACITOR,CHIP CERAMIC 0.1MF
C704	1-107-826-11	s	CAPACITOR,CHIP CERAMIC 0.1MF
C705	1-107-826-11	s	CAPACITOR,CHIP CERAMIC 0.1MF
C706	1-162-919-11	s	CAPACITOR,CERAMIC 22PF/50V CH
C707	1-162-927-11	s	CAPACITOR,CERAMIC 100PF/50V CH
C708	1-107-826-11	s	CAPACITOR,CHIP CERAMIC 0.1MF
C709	1-107-826-11	s	CAPACITOR,CHIP CERAMIC 0.1MF
C711	1-107-826-11	s	CAPACITOR,CHIP CERAMIC 0.1MF
C712	1-107-826-11	s	CAPACITOR,CHIP CERAMIC 0.1MF
C713	1-107-826-11	s	CAPACITOR,CHIP CERAMIC 0.1MF
C714	1-162-921-11	s	CAPACITOR,CERAMIC 33PF/50V CH
C715	1-107-826-11	s	CAPACITOR,CHIP CERAMIC 0.1MF
C716	1-162-927-11	s	CAPACITOR,CERAMIC 100PF/50V CH
C717	1-162-970-11	s	CAPACITOR CERAMIC 0.01MF/25V B
C718	1-162-970-11	s	CAPACITOR CERAMIC 0.01MF/25V B
C719	1-107-826-11	s	CAPACITOR,CHIP CERAMIC 0.1MF
C720	1-107-826-11	s	CAPACITOR,CHIP CERAMIC 0.1MF
C721	1-107-826-11	s	CAPACITOR,CHIP CERAMIC 0.1MF
C722	1-107-826-11	s	CAPACITOR,CHIP CERAMIC 0.1MF
C723	1-107-826-11	s	CAPACITOR,CHIP CERAMIC 0.1MF
C724	1-100-276-21	s	CAP, ELECT 22MF (5.0X6.5)
C790	1-107-826-11	s	CAPACITOR,CHIP CERAMIC 0.1MF
C791	1-162-916-11	s	CAPACITOR,CERAMIC 12PF/50V CH
C792	1-107-826-11	s	CAPACITOR,CHIP CERAMIC 0.1MF
C930	1-107-826-11	s	CAPACITOR,CHIP CERAMIC 0.1MF
C1000	1-107-826-11	s	CAPACITOR,CHIP CERAMIC 0.1MF
C1001	1-107-826-11	s	CAPACITOR,CHIP CERAMIC 0.1MF
C1002	1-107-826-11	s	CAPACITOR,CHIP CERAMIC 0.1MF
C1003	1-107-826-11	s	CAPACITOR,CHIP CERAMIC 0.1MF
C1004	1-107-826-11	s	CAPACITOR,CHIP CERAMIC 0.1MF
C1005	1-107-826-11	s	CAPACITOR,CHIP CERAMIC 0.1MF
C1006	1-107-826-11	s	CAPACITOR,CHIP CERAMIC 0.1MF
C1007	1-107-826-11	s	CAPACITOR,CHIP CERAMIC 0.1MF
C1008	1-107-826-11	s	CAPACITOR,CHIP CERAMIC 0.1MF
C1009	1-107-826-11	s	CAPACITOR,CHIP CERAMIC 0.1MF
C1010	1-107-826-11	s	CAPACITOR,CHIP CERAMIC 0.1MF
C1011	1-107-826-11	s	CAPACITOR,CHIP CERAMIC 0.1MF
C1012	1-107-826-11	s	CAPACITOR,CHIP CERAMIC 0.1MF
C1013	1-107-826-11	s	CAPACITOR,CHIP CERAMIC 0.1MF
C1014	1-107-826-11	s	CAPACITOR,CHIP CERAMIC 0.1MF
C1015	1-107-826-11	s	CAPACITOR,CHIP CERAMIC 0.1MF
C1016	1-107-826-11	s	CAPACITOR,CHIP CERAMIC 0.1MF
C1017	1-162-970-11	s	CAPACITOR CERAMIC 0.01MF/25V B
C1018	1-162-970-11	s	CAPACITOR CERAMIC 0.01MF/25V B
C1031	1-107-826-11	s	CAPACITOR,CHIP CERAMIC 0.1MF
C1032	1-107-826-11	s	CAPACITOR,CHIP CERAMIC 0.1MF
C1033	1-107-826-11	s	CAPACITOR,CHIP CERAMIC 0.1MF
C1034	1-107-826-11	s	CAPACITOR,CHIP CERAMIC 0.1MF
C1035	1-162-970-11	s	CAPACITOR CERAMIC 0.01MF/25V B
C1036	1-107-826-11	s	CAPACITOR,CHIP CERAMIC 0.1MF
C1037	1-162-970-11	s	CAPACITOR CERAMIC 0.01MF/25V B
C1038	1-107-826-11	s	CAPACITOR,CHIP CERAMIC 0.1MF
C1039	1-107-826-11	s	CAPACITOR,CHIP CERAMIC 0.1MF
C1101	1-115-416-11	s	CAPACITOR,CERAMIC 1000PF/25V
C1104	1-107-826-11	s	CAPACITOR,CHIP CERAMIC 0.1MF
C1105	1-164-315-11	s	CAPACITOR,CERAMIC 470PF/50V CH
C1107	1-115-416-11	s	CAPACITOR,CERAMIC 1000PF/25V

(EQ-84A/AH BOARD [SUFFIX 13-] for PLAYER)

Ref. No. or Q'ty	Part No.	SP	Description
C1109	1-164-315-11	s	CAPACITOR,CERAMIC 470PF/50V CH
C1111	1-115-416-11	s	CAPACITOR,CERAMIC 1000PF/25V
C1114	1-107-826-11	s	CAPACITOR,CHIP CERAMIC 0.1MF
C1115	1-164-315-11	s	CAPACITOR,CERAMIC 470PF/50V CH
C1119	1-115-416-11	s	CAPACITOR,CERAMIC 1000PF/25V
C1120	1-125-827-11	s	CAPACITOR,CERAMIC 1MF/25V
C1122	1-164-315-11	s	CAPACITOR,CERAMIC 470PF/50V CH
C1123	1-162-927-11	s	CAPACITOR,CERAMIC 100PF/50V CH
C1124	1-125-827-11	s	CAPACITOR,CERAMIC 1MF/25V
C1125	1-164-227-11	s	CAPACITOR,CERAMIC 0.022MF/25V
C1126	1-164-227-11	s	CAPACITOR,CERAMIC 0.022MF/25V
C1127	1-107-826-11	s	CAPACITOR,CHIP CERAMIC 0.1MF
C1128	1-107-826-11	s	CAPACITOR,CHIP CERAMIC 0.1MF
C1129	1-164-315-11	s	CAPACITOR,CERAMIC 470PF/50V CH
C1130	1-107-826-11	s	CAPACITOR,CHIP CERAMIC 0.1MF
C1131	1-162-915-11	s	CAPACITOR,CERAMIC 10PF/50V CH
C1132	1-162-915-11	s	CAPACITOR,CERAMIC 10PF/50V CH
C1133	1-107-826-11	s	CAPACITOR,CHIP CERAMIC 0.1MF
C1134	1-107-826-11	s	CAPACITOR,CHIP CERAMIC 0.1MF
C1135	1-107-826-11	s	CAPACITOR,CHIP CERAMIC 0.1MF
C1136	1-107-826-11	s	CAPACITOR,CHIP CERAMIC 0.1MF
C1137	1-107-826-11	s	CAPACITOR,CHIP CERAMIC 0.1MF
C1138	1-107-826-11	s	CAPACITOR,CHIP CERAMIC 0.1MF
C1139	1-107-826-11	s	CAPACITOR,CHIP CERAMIC 0.1MF
C1600	1-107-826-11	s	CAPACITOR,CHIP CERAMIC 0.1MF
C1601	1-107-826-11	s	CAPACITOR,CHIP CERAMIC 0.1MF
C1602	1-107-826-11	s	CAPACITOR,CHIP CERAMIC 0.1MF
C1603	1-107-826-11	s	CAPACITOR,CHIP CERAMIC 0.1MF
C1604	1-107-826-11	s	CAPACITOR,CHIP CERAMIC 0.1MF
C1605	1-107-826-11	s	CAPACITOR,CHIP CERAMIC 0.1MF
C1606	1-107-826-11	s	CAPACITOR,CHIP CERAMIC 0.1MF
C1607	1-162-919-11	s	CAPACITOR,CERAMIC 22PF/50V CH
C1608	1-162-927-11	s	CAPACITOR,CERAMIC 100PF/50V CH
C1609	1-107-826-11	s	CAPACITOR,CHIP CERAMIC 0.1MF
C1610	1-162-970-11	s	CAPACITOR CERAMIC 0.01MF/25V B
C1611	1-162-970-11	s	CAPACITOR CERAMIC 0.01MF/25V B
C1612	1-107-826-11	s	CAPACITOR,CHIP CERAMIC 0.1MF
C1613	1-107-826-11	s	CAPACITOR,CHIP CERAMIC 0.1MF
C1614	1-107-826-11	s	CAPACITOR,CHIP CERAMIC 0.1MF
C1616	1-107-826-11	s	CAPACITOR,CHIP CERAMIC 0.1MF
C1618	1-107-826-11	s	CAPACITOR,CHIP CERAMIC 0.1MF
C1620	1-107-826-11	s	CAPACITOR,CHIP CERAMIC 0.1MF
C1621	1-107-826-11	s	CAPACITOR,CHIP CERAMIC 0.1MF
C1622	1-162-921-11	s	CAPACITOR,CERAMIC 33PF/50V CH
C1623	1-107-826-11	s	CAPACITOR,CHIP CERAMIC 0.1MF
C1624	1-162-927-11	s	CAPACITOR,CERAMIC 100PF/50V CH
C1625	1-162-970-11	s	CAPACITOR CERAMIC 0.01MF/25V B
C1626	1-162-970-11	s	CAPACITOR CERAMIC 0.01MF/25V B
C1627	1-107-826-11	s	CAPACITOR,CHIP CERAMIC 0.1MF
C1628	1-107-826-11	s	CAPACITOR,CHIP CERAMIC 0.1MF
C1629	1-107-826-11	s	CAPACITOR,CHIP CERAMIC 0.1MF
C1690	1-107-826-11	s	CAPACITOR,CHIP CERAMIC 0.1MF
C1691	1-162-916-11	s	CAPACITOR,CERAMIC 12PF/50V CH
C1692	1-107-826-11	s	CAPACITOR,CHIP CERAMIC 0.1MF
C1700	1-107-826-11	s	CAPACITOR,CHIP CERAMIC 0.1MF
C1701	1-107-826-11	s	CAPACITOR,CHIP CERAMIC 0.1MF
C1702	1-107-826-11	s	CAPACITOR,CHIP CERAMIC 0.1MF
C1703	1-107-826-11	s	CAPACITOR,CHIP CERAMIC 0.1MF
C1704	1-107-826-11	s	CAPACITOR,CHIP CERAMIC 0.1MF

(EQ-84A/AH BOARD [SUFFIX 13-] for PLAYER)

Ref. No. or Q'ty	Part No.	SP	Description
C1705	1-107-826-11	s	CAPACITOR,CHIP CERAMIC 0.1MF
C1706	1-162-919-11	s	CAPACITOR,CERAMIC 22PF/50V CH
C1707	1-162-927-11	s	CAPACITOR,CERAMIC 100PF/50V CH
C1708	1-107-826-11	s	CAPACITOR,CHIP CERAMIC 0.1MF
C1709	1-107-826-11	s	CAPACITOR,CHIP CERAMIC 0.1MF
C1711	1-107-826-11	s	CAPACITOR,CHIP CERAMIC 0.1MF
C1712	1-107-826-11	s	CAPACITOR,CHIP CERAMIC 0.1MF
C1713	1-107-826-11	s	CAPACITOR,CHIP CERAMIC 0.1MF
C1714	1-162-921-11	s	CAPACITOR,CERAMIC 33PF/50V CH
C1715	1-107-826-11	s	CAPACITOR,CHIP CERAMIC 0.1MF
C1716	1-162-927-11	s	CAPACITOR,CERAMIC 100PF/50V CH
C1717	1-162-970-11	s	CAPACITOR CERAMIC 0.01MF/25V B
C1718	1-162-970-11	s	CAPACITOR CERAMIC 0.01MF/25V B
C1719	1-107-826-11	s	CAPACITOR,CHIP CERAMIC 0.1MF
C1720	1-107-826-11	s	CAPACITOR,CHIP CERAMIC 0.1MF
C1721	1-107-826-11	s	CAPACITOR,CHIP CERAMIC 0.1MF
C1790	1-107-826-11	s	CAPACITOR,CHIP CERAMIC 0.1MF
C1791	1-162-916-11	s	CAPACITOR,CERAMIC 12PF/50V CH
C1792	1-107-826-11	s	CAPACITOR,CHIP CERAMIC 0.1MF
CN100	1-580-789-91	s	PIN, CONNECTOR 6P
CN101	1-573-806-91	s	PIN, CONNECTOR 6P
CN200	1-573-806-91	s	PIN, CONNECTOR 6P
CN600	1-691-550-11	s	PIN,CONNECTOR (3P)(SMD)(1.5MM)
CN700	1-691-550-11	s	PIN,CONNECTOR (3P)(SMD)(1.5MM)
CN1100	1-580-756-21	s	PIN, CONNECTOR 7P
CN1600	1-691-550-11	s	PIN,CONNECTOR (3P)(SMD)(1.5MM)
CN1700	1-691-550-11	s	PIN,CONNECTOR (3P)(SMD)(1.5MM)
D200	8-719-938-75	s	DIODE SB05-05CP (RECTI)
D201	8-719-938-75	s	DIODE SB05-05CP (RECTI)
D1030	8-719-064-52	s	DIODE CL-191YG-CD-T
D1100	8-719-941-23	s	DIODE DA204U
D1101	8-719-941-23	s	DIODE DA204U
D1102	8-719-064-52	s	DIODE CL-191YG-CD-T
D1103	8-719-064-52	s	DIODE CL-191YG-CD-T
D1104	8-719-064-52	s	DIODE CL-191YG-CD-T
E100	1-535-877-22	s	CHIP,CHECKER (TEST POINT)
E101	1-535-877-22	s	CHIP,CHECKER (TEST POINT)
E200	1-535-877-22	s	CHIP,CHECKER (TEST POINT)
E1000	1-535-877-22	s	CHIP,CHECKER (TEST POINT)
E1100	1-535-877-22	s	CHIP,CHECKER (TEST POINT)
F100	⚠ 1-576-270-11	s	FUSE CHIP 4A/125V (6125)
F101	⚠ 1-576-270-11	s	FUSE CHIP 4A/125V (6125)
FL1030	1-239-898-22	s	FILTER, EMI (SMD)
FL1031	1-239-898-22	s	FILTER, EMI (SMD)
FL1032	1-239-898-22	s	FILTER, EMI (SMD)
FL1033	1-239-898-22	s	FILTER, EMI (SMD)
FL1034	1-239-898-22	s	FILTER, EMI (SMD)
FL1035	1-239-898-22	s	FILTER, EMI (SMD)
FL1036	1-239-898-22	s	FILTER, EMI (SMD)
FL1037	1-239-898-22	s	FILTER, EMI (SMD)
FL1038	1-239-898-22	s	FILTER, EMI (SMD)
FL1039	1-239-898-22	s	FILTER, EMI (SMD)
FL1040	1-239-898-22	s	FILTER, EMI (SMD)
FL1041	1-239-898-22	s	FILTER, EMI (SMD)
FL1042	1-239-898-22	s	FILTER, EMI (SMD)
FL1043	1-239-898-22	s	FILTER, EMI (SMD)
FL1044	1-239-898-22	s	FILTER, EMI (SMD)

(EQ-84A/AH BOARD [SUFFIX 13-] for PLAYER)

Ref. No. or Q'ty	Part No.	SP	Description
FL1045	1-239-898-22	s	FILTER, EMI (SMD)
FL1046	1-239-898-22	s	FILTER, EMI (SMD)
FL1047	1-239-898-22	s	FILTER, EMI (SMD)
FL1048	1-239-898-22	s	FILTER, EMI (SMD)
IC101	8-759-524-27	s	IC TC74VHC244FT(EL)
IC202	8-759-523-81	s	IC TC74VHC08FT(EL)
IC206	8-759-523-94	s	IC TC74VHC32FT(EL)
IC208	8-759-642-22	s	IC UPC29M05T-E2
IC209	6-701-871-11	s	IC TK72150MCL-G
IC600	8-752-109-62	s	IC CXA3550AR
IC601	8-759-561-46	s	IC AD8014ART-REEL7
IC602	8-759-642-22	s	IC UPC29M05T-E2
IC700	8-752-109-62	s	IC CXA3550AR
IC701	8-759-642-22	s	IC UPC29M05T-E2
IC901	8-759-392-77	s	IC SN74LVC245APW (E20)
IC931	8-759-337-40	s	IC NJM2904V(TE2)
IC1000	8-759-640-94	o	IC CXD9096R
IC1001	8-759-392-77	s	IC SN74LVC245APW (E20)
IC1030	8-759-523-95	s	IC TC74VHC74FT(EL)
IC1031	8-759-523-94	s	IC TC74VHC32FT(EL)
IC1032	8-759-392-77	s	IC SN74LVC245APW (E20)
IC1033	8-759-392-77	s	IC SN74LVC245APW (E20)
IC1034	8-759-524-09	s	IC TC74VHC153FT (EL)
IC1035	8-759-337-40	s	IC NJM2904V(TE2)
IC1100	8-759-337-40	s	IC NJM2904V(TE2)
IC1101	8-759-337-40	s	IC NJM2904V(TE2)
IC1102	8-759-337-40	s	IC NJM2904V(TE2)
IC1103	8-759-337-40	s	IC NJM2904V(TE2)
IC1104	8-759-524-27	s	IC TC74VHC244FT(EL)
IC1105	8-759-491-50	s	IC TC74VHCT244AFT(EL)
IC1106	8-759-523-81	s	IC TC74VHC08FT(EL)
IC1107	8-759-523-00	s	IC TC74HC4051AFT(EL)
IC1108	8-759-491-46	s	IC TC74VHCT04AFT (EL)
IC1109	8-759-337-40	s	IC NJM2904V(TE2)
IC1110	6-705-737-01	s	IC CAT24WC16WI-TE13
IC1111	6-705-737-01	s	IC CAT24WC16WI-TE13
IC1112	8-759-523-02	s	IC TC74HC4053AFT(EL)
IC1113*H	8-759-538-30	s	IC HD64F3437TFLH16
*M	6-801-811-01	s	IC HD6433437WV32XV
IC1114	8-759-337-40	s	IC NJM2904V(TE2)
IC1115	8-759-337-40	s	IC NJM2904V(TE2)
IC1600	8-752-109-62	s	IC CXA3550AR
IC1601	8-759-561-46	s	IC AD8014ART-REEL7
IC1700	8-752-109-62	s	IC CXA3550AR
L100	1-416-344-11	s	COIL, CHOKE 10UH
L101	1-416-344-11	s	COIL, CHOKE 10UH
L102	1-416-344-11	s	COIL, CHOKE 10UH
L103	1-416-344-11	s	COIL, CHOKE 10UH
L690	1-410-370-31	s	INDUCTOR,CHIP 1.2UH (3225)
L790	1-410-370-31	s	INDUCTOR,CHIP 1.2UH (3225)
L1690	1-410-370-31	s	INDUCTOR,CHIP 1.2UH (3225)
L1790	1-410-370-31	s	INDUCTOR,CHIP 1.2UH (3225)
Q690	8-729-143-13	s	TRANSISTOR 2SC4176-B34
Q691	8-729-143-07	s	TRANSISTOR 2SA1610-Y33
Q700	8-729-928-81	s	TRANSISTOR DTC144EE
Q701	8-729-143-07	s	TRANSISTOR 2SA1610-Y33
Q702	8-729-143-07	s	TRANSISTOR 2SA1610-Y33
Q790	8-729-143-13	s	TRANSISTOR 2SC4176-B34

(EQ-84A/AH BOARD [SUFFIX 13-] for PLAYER)

Ref. No. or Q'ty	Part No.	SP	Description
Q791	8-729-143-07	s	TRANSISTOR 2SA1610-Y33
Q1102	8-729-928-81	s	TRANSISTOR DTC144EE
Q1103	8-729-928-81	s	TRANSISTOR DTC144EE
Q1104	8-729-928-81	s	TRANSISTOR DTC144EE
Q1105	8-729-928-81	s	TRANSISTOR DTC144EE
Q1600	8-729-143-13	s	TRANSISTOR 2SC4176-B34
Q1690	8-729-143-13	s	TRANSISTOR 2SC4176-B34
Q1691	8-729-143-07	s	TRANSISTOR 2SA1610-Y33
Q1700	8-729-928-81	s	TRANSISTOR DTC144EE
Q1701	8-729-143-07	s	TRANSISTOR 2SA1610-Y33
Q1702	8-729-143-07	s	TRANSISTOR 2SA1610-Y33
Q1790	8-729-143-13	s	TRANSISTOR 2SC4176-B34
Q1791	8-729-143-07	s	TRANSISTOR 2SA1610-Y33
R100	1-218-871-11	s	RESISTOR,CHIP 10K 1/10W (1608)
R101	1-218-871-11	s	RESISTOR,CHIP 10K 1/10W (1608)
R102	1-218-871-11	s	RESISTOR,CHIP 10K 1/10W (1608)
R103	1-218-871-11	s	RESISTOR,CHIP 10K 1/10W (1608)
R104	1-218-871-11	s	RESISTOR,CHIP 10K 1/10W (1608)
R105	1-218-871-11	s	RESISTOR,CHIP 10K 1/10W (1608)
R106	1-218-871-11	s	RESISTOR,CHIP 10K 1/10W (1608)
R107	1-218-871-11	s	RESISTOR,CHIP 10K 1/10W (1608)
R108	1-218-871-11	s	RESISTOR,CHIP 10K 1/10W (1608)
R109	1-218-871-11	s	RESISTOR,CHIP 10K 1/10W (1608)
R110	1-218-871-11	s	RESISTOR,CHIP 10K 1/10W (1608)
R111	1-218-871-11	s	RESISTOR,CHIP 10K 1/10W (1608)
R112	1-218-847-11	s	RESISTOR, CHIP 1K 1/10W (1608)
R113	1-218-847-11	s	RESISTOR, CHIP 1K 1/10W (1608)
R114	1-218-847-11	s	RESISTOR, CHIP 1K 1/10W (1608)
R115	1-218-847-11	s	RESISTOR, CHIP 1K 1/10W (1608)
R116	1-218-847-11	s	RESISTOR, CHIP 1K 1/10W (1608)
R117	1-218-847-11	s	RESISTOR, CHIP 1K 1/10W (1608)
R118	1-218-847-11	s	RESISTOR, CHIP 1K 1/10W (1608)
R119	1-218-847-11	s	RESISTOR, CHIP 1K 1/10W (1608)
R120	1-218-847-11	s	RESISTOR, CHIP 1K 1/10W (1608)
R121	1-218-847-11	s	RESISTOR, CHIP 1K 1/10W (1608)
R122	1-218-847-11	s	RESISTOR, CHIP 1K 1/10W (1608)
R123	1-218-847-11	s	RESISTOR, CHIP 1K 1/10W (1608)
R125	1-216-864-11	s	CONDUCTOR, CHIP (1608)
R127	1-216-864-11	s	CONDUCTOR, CHIP (1608)
R128	1-218-871-11	s	RESISTOR,CHIP 10K 1/10W (1608)
R129	1-218-871-11	s	RESISTOR,CHIP 10K 1/10W (1608)
R130	1-218-871-11	s	RESISTOR,CHIP 10K 1/10W (1608)
R131	1-218-871-11	s	RESISTOR,CHIP 10K 1/10W (1608)
R132	1-218-871-11	s	RESISTOR,CHIP 10K 1/10W (1608)
R133	1-218-851-11	s	RESISTOR,CHIP 1.5K 1/10W(1608)
R134	1-218-851-11	s	RESISTOR,CHIP 1.5K 1/10W(1608)
R135	1-218-871-11	s	RESISTOR,CHIP 10K 1/10W (1608)
R136	1-218-871-11	s	RESISTOR,CHIP 10K 1/10W (1608)
R137	1-218-831-11	s	RESISTOR, CHIP 220 1/10W(1608)
R138	1-218-831-11	s	RESISTOR, CHIP 220 1/10W(1608)
R139	1-218-871-11	s	RESISTOR,CHIP 10K 1/10W (1608)
R224	1-218-871-11	s	RESISTOR,CHIP 10K 1/10W (1608)
R225	1-218-871-11	s	RESISTOR,CHIP 10K 1/10W (1608)
R226	1-218-871-11	s	RESISTOR,CHIP 10K 1/10W (1608)
R227	1-218-871-11	s	RESISTOR,CHIP 10K 1/10W (1608)
R259	1-218-895-11	s	RESISTOR,CHIP 100K 1/10W(1608)
R260	1-218-895-11	s	RESISTOR,CHIP 100K 1/10W(1608)
R262	1-218-847-11	s	RESISTOR, CHIP 1K 1/10W (1608)

(EQ-84A/AH BOARD [SUFFIX 13-] for PLAYER)

Ref. No. or Q'ty	Part No.	SP	Description
R263	1-218-847-11	s	RESISTOR, CHIP 1K 1/10W (1608)
R600	1-211-969-11	s	RESISTOR,CHIP 10 1/10W (1608)
R601	1-211-969-11	s	RESISTOR,CHIP 10 1/10W (1608)
R602	1-218-878-11	s	RESISTOR,CHIP 20K 1/10W (1608)
R603	1-218-847-11	s	RESISTOR, CHIP 1K 1/10W (1608)
R604	1-218-835-11	s	RESISTOR,CHIP 330 1/10W (1608)
R605	1-218-847-11	s	RESISTOR, CHIP 1K 1/10W (1608)
R606	1-218-841-11	s	RESISTOR,CHIP 560 1/10W (1608)
R607	1-218-847-11	s	RESISTOR, CHIP 1K 1/10W (1608)
R609	1-218-847-11	s	RESISTOR, CHIP 1K 1/10W (1608)
R612	1-211-985-11	s	RESISTOR,CHIP 47 1/10W (1608)
R613	1-218-871-11	s	RESISTOR,CHIP 10K 1/10W (1608)
R614	1-218-871-11	s	RESISTOR,CHIP 10K 1/10W (1608)
R615	1-218-882-11	s	RESISTOR, CHIP 30K 1/10W(1608)
R616	1-218-877-11	s	RESISTOR,CHIP 18K 1/10W (1608)
R621	1-218-823-11	s	RESISTOR,CHIP 100 1/10W (1608)
R622	1-218-854-11	s	RESISTOR,CHIP 2K 1/10W (1608)
R623	1-218-847-11	s	RESISTOR, CHIP 1K 1/10W (1608)
R624	1-218-879-11	s	RESISTOR,CHIP 22K 1/10W (1608)
R625	1-218-823-11	s	RESISTOR,CHIP 100 1/10W (1608)
R631	1-216-864-11	s	CONDUCTOR, CHIP (1608)
R633	1-216-864-11	s	CONDUCTOR, CHIP (1608)
R634	1-216-864-11	s	CONDUCTOR, CHIP (1608)
R690	1-218-831-11	s	RESISTOR, CHIP 220 1/10W(1608)
R691	1-218-830-11	s	RESISTOR,CHIP 200 1/10W (1608)
R692	1-218-841-11	s	RESISTOR,CHIP 560 1/10W (1608)
R693	1-218-847-11	s	RESISTOR, CHIP 1K 1/10W (1608)
R700	1-218-855-11	s	RESISTOR,CHIP 2.2K 1/10W(1608)
R701	1-211-969-11	s	RESISTOR,CHIP 10 1/10W (1608)
R702	1-218-855-11	s	RESISTOR,CHIP 2.2K 1/10W(1608)
R703	1-211-969-11	s	RESISTOR,CHIP 10 1/10W (1608)
R704	1-218-878-11	s	RESISTOR,CHIP 20K 1/10W (1608)
R705	1-218-841-11	s	RESISTOR,CHIP 560 1/10W (1608)
R706	1-218-847-11	s	RESISTOR, CHIP 1K 1/10W (1608)
R707	1-218-871-11	s	RESISTOR,CHIP 10K 1/10W (1608)
R708	1-218-871-11	s	RESISTOR,CHIP 10K 1/10W (1608)
R709	1-218-882-11	s	RESISTOR, CHIP 30K 1/10W(1608)
R710	1-218-877-11	s	RESISTOR,CHIP 18K 1/10W (1608)
R715	1-218-823-11	s	RESISTOR,CHIP 100 1/10W (1608)
R716	1-218-854-11	s	RESISTOR,CHIP 2K 1/10W (1608)
R717	1-218-847-11	s	RESISTOR, CHIP 1K 1/10W (1608)
R718	1-218-879-11	s	RESISTOR,CHIP 22K 1/10W (1608)
R725	1-216-864-11	s	CONDUCTOR, CHIP (1608)
R727	1-211-985-11	s	RESISTOR,CHIP 47 1/10W (1608)
R728	1-211-985-11	s	RESISTOR,CHIP 47 1/10W (1608)
R790	1-218-831-11	s	RESISTOR, CHIP 220 1/10W(1608)
R791	1-218-830-11	s	RESISTOR,CHIP 200 1/10W (1608)
R792	1-218-841-11	s	RESISTOR,CHIP 560 1/10W (1608)
R793	1-218-847-11	s	RESISTOR, CHIP 1K 1/10W (1608)
R908	1-218-895-11	s	RESISTOR,CHIP 100K 1/10W(1608)
R942	1-218-895-11	s	RESISTOR,CHIP 100K 1/10W(1608)
R1000	1-218-887-11	s	RESISTOR,CHIP 47K 1/10W (1608)
R1001	1-218-887-11	s	RESISTOR,CHIP 47K 1/10W (1608)
R1002	1-218-883-11	s	RESISTOR,CHIP 33K 1/10W (1608)
R1003	1-218-883-11	s	RESISTOR,CHIP 33K 1/10W (1608)
R1004	1-218-823-11	s	RESISTOR,CHIP 100 1/10W (1608)
R1005	1-216-864-11	s	CONDUCTOR, CHIP (1608)
R1006	1-218-847-11	s	RESISTOR, CHIP 1K 1/10W (1608)
R1030	1-218-895-11	s	RESISTOR,CHIP 100K 1/10W(1608)

(EQ-84A/AH BOARD [SUFFIX 13-] for PLAYER)

Ref. No. or Q'ty	Part No.	SP	Description
R1031	1-218-831-11	s	RESISTOR, CHIP 220 1/10W(1608)
R1032	1-218-895-11	s	RESISTOR,CHIP 100K 1/10W(1608)
R1033	1-218-895-11	s	RESISTOR,CHIP 100K 1/10W(1608)
R1034	1-218-847-11	s	RESISTOR, CHIP 1K 1/10W (1608)
R1035	1-218-847-11	s	RESISTOR, CHIP 1K 1/10W (1608)
R1036	1-211-985-11	s	RESISTOR,CHIP 47 1/10W (1608)
R1037	1-218-835-11	s	RESISTOR,CHIP 330 1/10W (1608)
R1038	1-218-829-11	s	RESISTOR,CHIP 180 1/10W (1608)
R1039	1-218-847-11	s	RESISTOR, CHIP 1K 1/10W (1608)
R1040	1-218-835-11	s	RESISTOR,CHIP 330 1/10W (1608)
R1041	1-216-864-11	s	CONDUCTOR, CHIP (1608)
R1042	1-216-864-11	s	CONDUCTOR, CHIP (1608)
R1043	1-216-864-11	s	CONDUCTOR, CHIP (1608)
R1044	1-216-864-11	s	CONDUCTOR, CHIP (1608)
R1045	1-216-864-11	s	CONDUCTOR, CHIP (1608)
R1046	1-216-864-11	s	CONDUCTOR, CHIP (1608)
R1047	1-216-864-11	s	CONDUCTOR, CHIP (1608)
R1048	1-216-864-11	s	CONDUCTOR, CHIP (1608)
R1049	1-216-864-11	s	CONDUCTOR, CHIP (1608)
R1050	1-216-864-11	s	CONDUCTOR, CHIP (1608)
R1051	1-216-864-11	s	CONDUCTOR, CHIP (1608)
R1052	1-216-864-11	s	CONDUCTOR, CHIP (1608)
R1053	1-216-864-11	s	CONDUCTOR, CHIP (1608)
R1054	1-218-882-11	s	RESISTOR, CHIP 30K 1/10W(1608)
R1055	1-218-882-11	s	RESISTOR, CHIP 30K 1/10W(1608)
R1056	1-218-882-11	s	RESISTOR, CHIP 30K 1/10W(1608)
R1057	1-218-882-11	s	RESISTOR, CHIP 30K 1/10W(1608)
R1100	1-218-883-11	s	RESISTOR,CHIP 33K 1/10W (1608)
R1101	1-218-883-11	s	RESISTOR,CHIP 33K 1/10W (1608)
R1102	1-218-887-11	s	RESISTOR,CHIP 47K 1/10W (1608)
R1103	1-218-887-11	s	RESISTOR,CHIP 47K 1/10W (1608)
R1104	1-218-883-11	s	RESISTOR,CHIP 33K 1/10W (1608)
R1105	1-218-883-11	s	RESISTOR,CHIP 33K 1/10W (1608)
R1106	1-218-887-11	s	RESISTOR,CHIP 47K 1/10W (1608)
R1107	1-218-887-11	s	RESISTOR,CHIP 47K 1/10W (1608)
R1108	1-218-883-11	s	RESISTOR,CHIP 33K 1/10W (1608)
R1109	1-218-883-11	s	RESISTOR,CHIP 33K 1/10W (1608)
R1110	1-218-887-11	s	RESISTOR,CHIP 47K 1/10W (1608)
R1111	1-218-887-11	s	RESISTOR,CHIP 47K 1/10W (1608)
R1113	1-218-895-11	s	RESISTOR,CHIP 100K 1/10W(1608)
R1114	1-218-895-11	s	RESISTOR,CHIP 100K 1/10W(1608)
R1115	1-218-895-11	s	RESISTOR,CHIP 100K 1/10W(1608)
R1116	1-218-895-11	s	RESISTOR,CHIP 100K 1/10W(1608)
R1117	1-218-883-11	s	RESISTOR,CHIP 33K 1/10W (1608)
R1118	1-218-883-11	s	RESISTOR,CHIP 33K 1/10W (1608)
R1119	1-218-895-11	s	RESISTOR,CHIP 100K 1/10W(1608)
R1120	1-218-895-11	s	RESISTOR,CHIP 100K 1/10W(1608)
R1121	1-218-895-11	s	RESISTOR,CHIP 100K 1/10W(1608)
R1122	1-218-823-11	s	RESISTOR,CHIP 100 1/10W (1608)
R1123	1-218-823-11	s	RESISTOR,CHIP 100 1/10W (1608)
R1124	1-218-823-11	s	RESISTOR,CHIP 100 1/10W (1608)
R1125	1-218-823-11	s	RESISTOR,CHIP 100 1/10W (1608)
R1126	1-218-823-11	s	RESISTOR,CHIP 100 1/10W (1608)
R1127	1-218-823-11	s	RESISTOR,CHIP 100 1/10W (1608)
R1128	1-218-823-11	s	RESISTOR,CHIP 100 1/10W (1608)
R1129	1-218-823-11	s	RESISTOR,CHIP 100 1/10W (1608)
R1130	1-218-847-11	s	RESISTOR, CHIP 1K 1/10W (1608)
R1131	1-218-871-11	s	RESISTOR,CHIP 10K 1/10W (1608)
R1132	1-218-887-11	s	RESISTOR,CHIP 47K 1/10W (1608)

(EQ-84A/AH BOARD [SUFFIX 13-] for PLAYER)

Ref. No. or Q'ty	Part No.	SP	Description
R1133	1-218-887-11	s	RESISTOR,CHIP 47K 1/10W (1608)
R1134	1-218-871-11	s	RESISTOR,CHIP 10K 1/10W (1608)
R1135	1-218-895-11	s	RESISTOR,CHIP 100K 1/10W(1608)
R1136	1-218-871-11	s	RESISTOR,CHIP 10K 1/10W (1608)
R1137	1-218-895-11	s	RESISTOR,CHIP 100K 1/10W(1608)
R1138	1-218-871-11	s	RESISTOR,CHIP 10K 1/10W (1608)
R1141	1-216-864-11	s	CONDUCTOR, CHIP (1608)
R1142	1-216-864-11	s	CONDUCTOR, CHIP (1608)
R1143	1-218-847-11	s	RESISTOR, CHIP 1K 1/10W (1608)
R1144	1-218-847-11	s	RESISTOR, CHIP 1K 1/10W (1608)
R1145	1-218-847-11	s	RESISTOR, CHIP 1K 1/10W (1608)
R1146	1-218-847-11	s	RESISTOR, CHIP 1K 1/10W (1608)
R1147	1-218-847-11	s	RESISTOR, CHIP 1K 1/10W (1608)
R1148	1-218-871-11	s	RESISTOR,CHIP 10K 1/10W (1608)
R1149	1-218-871-11	s	RESISTOR,CHIP 10K 1/10W (1608)
R1150	1-218-871-11	s	RESISTOR,CHIP 10K 1/10W (1608)
R1151	1-218-895-11	s	RESISTOR,CHIP 100K 1/10W(1608)
R1152	1-218-871-11	s	RESISTOR,CHIP 10K 1/10W (1608)
R1153	1-218-895-11	s	RESISTOR,CHIP 100K 1/10W(1608)
R1154	1-218-895-11	s	RESISTOR,CHIP 100K 1/10W(1608)
R1155	1-218-895-11	s	RESISTOR,CHIP 100K 1/10W(1608)
R1159	1-218-835-11	s	RESISTOR,CHIP 330 1/10W (1608)
R1160	1-218-835-11	s	RESISTOR,CHIP 330 1/10W (1608)
R1161	1-218-823-11	s	RESISTOR,CHIP 100 1/10W (1608)
R1162	1-218-847-11	s	RESISTOR, CHIP 1K 1/10W (1608)
R1163	1-218-847-11	s	RESISTOR, CHIP 1K 1/10W (1608)
R1164	1-218-871-11	s	RESISTOR,CHIP 10K 1/10W (1608)
R1165	1-218-835-11	s	RESISTOR,CHIP 330 1/10W (1608)
R1166	1-218-887-11	s	RESISTOR,CHIP 47K 1/10W (1608)
R1167	1-218-823-11	s	RESISTOR,CHIP 100 1/10W (1608)
R1168	1-218-823-11	s	RESISTOR,CHIP 100 1/10W (1608)
R1169	1-218-823-11	s	RESISTOR,CHIP 100 1/10W (1608)
R1170	1-218-823-11	s	RESISTOR,CHIP 100 1/10W (1608)
R1171	1-218-879-11	s	RESISTOR,CHIP 22K 1/10W (1608)
R1172	1-218-879-11	s	RESISTOR,CHIP 22K 1/10W (1608)
R1173	1-218-879-11	s	RESISTOR,CHIP 22K 1/10W (1608)
R1174	1-218-879-11	s	RESISTOR,CHIP 22K 1/10W (1608)
R1175	1-218-883-11	s	RESISTOR,CHIP 33K 1/10W (1608)
R1176	1-218-883-11	s	RESISTOR,CHIP 33K 1/10W (1608)
R1177	1-218-883-11	s	RESISTOR,CHIP 33K 1/10W (1608)
R1178	1-218-883-11	s	RESISTOR,CHIP 33K 1/10W (1608)
R1179	1-216-864-11	s	CONDUCTOR, CHIP (1608)
R1600	1-211-969-11	s	RESISTOR,CHIP 10 1/10W (1608)
R1601	1-211-969-11	s	RESISTOR,CHIP 10 1/10W (1608)
R1602	1-218-878-11	s	RESISTOR,CHIP 20K 1/10W (1608)
R1603	1-218-847-11	s	RESISTOR, CHIP 1K 1/10W (1608)
R1604	1-218-835-11	s	RESISTOR,CHIP 330 1/10W (1608)
R1605	1-218-847-11	s	RESISTOR, CHIP 1K 1/10W (1608)
R1606	1-218-841-11	s	RESISTOR,CHIP 560 1/10W (1608)
R1607	1-218-847-11	s	RESISTOR, CHIP 1K 1/10W (1608)
R1609	1-218-847-11	s	RESISTOR, CHIP 1K 1/10W (1608)
R1610	1-218-823-11	s	RESISTOR,CHIP 100 1/10W (1608)
R1611	1-218-847-11	s	RESISTOR, CHIP 1K 1/10W (1608)
R1612	1-218-871-11	s	RESISTOR,CHIP 10K 1/10W (1608)
R1613	1-211-985-11	s	RESISTOR,CHIP 47 1/10W (1608)
R1614	1-211-985-11	s	RESISTOR,CHIP 47 1/10W (1608)
R1615	1-218-871-11	s	RESISTOR,CHIP 10K 1/10W (1608)
R1616	1-218-882-11	s	RESISTOR, CHIP 30K 1/10W(1608)
R1617	1-218-877-11	s	RESISTOR,CHIP 18K 1/10W (1608)

(EQ-84A/AH BOARD [SUFFIX 13-] for PLAYER)

Ref. No. or Q'ty	Part No.	SP	Description
R1622	1-218-823-11	s	RESISTOR,CHIP 100 1/10W (1608)
R1623	1-218-854-11	s	RESISTOR,CHIP 2K 1/10W (1608)
R1624	1-218-847-11	s	RESISTOR, CHIP 1K 1/10W (1608)
R1625	1-218-879-11	s	RESISTOR,CHIP 22K 1/10W (1608)
R1632	1-216-864-11	s	CONDUCTOR, CHIP (1608)
R1634	1-216-864-11	s	CONDUCTOR, CHIP (1608)
R1635	1-216-864-11	s	CONDUCTOR, CHIP (1608)
R1690	1-218-831-11	s	RESISTOR, CHIP 220 1/10W(1608)
R1691	1-218-830-11	s	RESISTOR,CHIP 200 1/10W (1608)
R1692	1-218-841-11	s	RESISTOR,CHIP 560 1/10W (1608)
R1693	1-218-847-11	s	RESISTOR, CHIP 1K 1/10W (1608)
R1700	1-218-855-11	s	RESISTOR,CHIP 2.2K 1/10W(1608)
R1701	1-211-969-11	s	RESISTOR,CHIP 10 1/10W (1608)
R1702	1-218-855-11	s	RESISTOR,CHIP 2.2K 1/10W(1608)
R1703	1-211-969-11	s	RESISTOR,CHIP 10 1/10W (1608)
R1704	1-218-878-11	s	RESISTOR,CHIP 20K 1/10W (1608)
R1705	1-218-841-11	s	RESISTOR,CHIP 560 1/10W (1608)
R1706	1-218-847-11	s	RESISTOR, CHIP 1K 1/10W (1608)
R1707	1-218-871-11	s	RESISTOR,CHIP 10K 1/10W (1608)
R1708	1-218-871-11	s	RESISTOR,CHIP 10K 1/10W (1608)
R1709	1-218-882-11	s	RESISTOR, CHIP 30K 1/10W(1608)
R1710	1-218-877-11	s	RESISTOR,CHIP 18K 1/10W (1608)
R1715	1-218-823-11	s	RESISTOR,CHIP 100 1/10W (1608)
R1716	1-218-854-11	s	RESISTOR,CHIP 2K 1/10W (1608)
R1717	1-218-847-11	s	RESISTOR, CHIP 1K 1/10W (1608)
R1718	1-218-879-11	s	RESISTOR,CHIP 22K 1/10W (1608)
R1725	1-216-864-11	s	CONDUCTOR, CHIP (1608)
R1727	1-211-985-11	s	RESISTOR,CHIP 47 1/10W (1608)
R1728	1-211-985-11	s	RESISTOR,CHIP 47 1/10W (1608)
R1790	1-218-831-11	s	RESISTOR, CHIP 220 1/10W(1608)
R1791	1-218-830-11	s	RESISTOR,CHIP 200 1/10W (1608)
R1792	1-218-841-11	s	RESISTOR,CHIP 560 1/10W (1608)
R1793	1-218-847-11	s	RESISTOR, CHIP 1K 1/10W (1608)
S1100	1-572-473-11	s	SWITCH, TACTILE
TP100	1-535-877-22	s	CHIP,CHECKER (TEST POINT)
TP101	1-535-877-22	s	CHIP,CHECKER (TEST POINT)
TP102	1-535-877-22	s	CHIP,CHECKER (TEST POINT)
TP103	1-535-877-22	s	CHIP,CHECKER (TEST POINT)
TP104	1-535-877-22	s	CHIP,CHECKER (TEST POINT)
TP105	1-535-877-22	s	CHIP,CHECKER (TEST POINT)
TP106	1-535-877-22	s	CHIP,CHECKER (TEST POINT)
TP107	1-535-877-22	s	CHIP,CHECKER (TEST POINT)
TP108	1-535-877-22	s	CHIP,CHECKER (TEST POINT)
TP109	1-535-877-22	s	CHIP,CHECKER (TEST POINT)
TP110	1-535-877-22	s	CHIP,CHECKER (TEST POINT)
TP111	1-535-877-22	s	CHIP,CHECKER (TEST POINT)
TP200	1-535-877-22	s	CHIP,CHECKER (TEST POINT)
TP201	1-535-877-22	s	CHIP,CHECKER (TEST POINT)
TP202	1-535-877-22	s	CHIP,CHECKER (TEST POINT)
TP300	1-535-877-22	s	CHIP,CHECKER (TEST POINT)
TP301	1-535-877-22	s	CHIP,CHECKER (TEST POINT)
TP302	1-535-877-22	s	CHIP,CHECKER (TEST POINT)
TP600	1-535-877-22	s	CHIP,CHECKER (TEST POINT)
TP601	1-535-877-22	s	CHIP,CHECKER (TEST POINT)
TP602	1-535-877-22	s	CHIP,CHECKER (TEST POINT)
TP700	1-535-877-22	s	CHIP,CHECKER (TEST POINT)
TP701	1-535-877-22	s	CHIP,CHECKER (TEST POINT)
TP1001	1-535-877-22	s	CHIP,CHECKER (TEST POINT)

(EQ-84A/AH BOARD [SUFFIX 13-] for PLAYER)

Ref. No. or Q'ty	Part No.	SP	Description
TP1002	1-535-877-22	s	CHIP,CHECKER (TEST POINT)
TP1003	1-535-877-22	s	CHIP,CHECKER (TEST POINT)
TP1004	1-535-877-22	s	CHIP,CHECKER (TEST POINT)
TP1108	1-535-877-22	s	CHIP,CHECKER (TEST POINT)
TP1600	1-535-877-22	s	CHIP,CHECKER (TEST POINT)
TP1601	1-535-877-22	s	CHIP,CHECKER (TEST POINT)
TP1700	1-535-877-22	s	CHIP,CHECKER (TEST POINT)
TP1701	1-535-877-22	s	CHIP,CHECKER (TEST POINT)
X1100	1-767-464-11	s	VIBRATOR, CRYSTAL

FP-133 BOARD [SUFFIX 11]

[Lot No. 261 - 334] HDW-2000, M2000/P, M2100/P, A2100
MSW-2000, M2000/P, A2000/P, M2100/P

Ref. No. or Q'ty	Part No.	SP	Description
1pc	A-8344-893-A	s	MOUNTED CIRCUIT BOARD, FP-133
1pc	1-767-156-11	s	OSCILLATOR,CRYSTAL(IN BATTERY)
C101	1-131-992-11	s	CAP, CERAMIC 100000PF F 1608
C102	1-131-992-11	s	CAP, CERAMIC 100000PF F 1608
C103	1-131-992-11	s	CAP, CERAMIC 100000PF F 1608
C104	1-131-992-11	s	CAP, CERAMIC 100000PF F 1608
C105	1-131-992-11	s	CAP, CERAMIC 100000PF F 1608
C106	1-131-992-11	s	CAP, CERAMIC 100000PF F 1608
C107	1-131-992-11	s	CAP, CERAMIC 100000PF F 1608
C108	1-131-992-11	s	CAP, CERAMIC 100000PF F 1608
C109	1-131-992-11	s	CAP, CERAMIC 100000PF F 1608
C110	1-131-992-11	s	CAP, CERAMIC 100000PF F 1608
C111	1-131-992-11	s	CAP, CERAMIC 100000PF F 1608
C112	1-131-992-11	s	CAP, CERAMIC 100000PF F 1608
C113	1-131-992-11	s	CAP, CERAMIC 100000PF F 1608
C114	1-131-992-11	s	CAP, CERAMIC 100000PF F 1608
C115	1-131-992-11	s	CAP, CERAMIC 100000PF F 1608
C116	1-131-992-11	s	CAP, CERAMIC 100000PF F 1608
C117	1-131-992-11	s	CAP, CERAMIC 100000PF F 1608
C118	1-131-992-11	s	CAP, CERAMIC 100000PF F 1608
C119	1-131-992-11	s	CAP, CERAMIC 100000PF F 1608
C120	1-131-992-11	s	CAP, CERAMIC 100000PF F 1608
C121	1-131-992-11	s	CAP, CERAMIC 100000PF F 1608
C122	1-131-992-11	s	CAP, CERAMIC 100000PF F 1608
C123	1-131-992-11	s	CAP, CERAMIC 100000PF F 1608
C125	1-131-992-11	s	CAP, CERAMIC 100000PF F 1608
C126	1-131-992-11	s	CAP, CERAMIC 100000PF F 1608
C127	1-131-992-11	s	CAP, CERAMIC 100000PF F 1608
C201	1-131-992-11	s	CAP, CERAMIC 100000PF F 1608
C202	1-131-992-11	s	CAP, CERAMIC 100000PF F 1608
C203	1-131-992-11	s	CAP, CERAMIC 100000PF F 1608
C204	1-131-992-11	s	CAP, CERAMIC 100000PF F 1608
C205	1-131-992-11	s	CAP, CERAMIC 100000PF F 1608
C206	1-131-992-11	s	CAP, CERAMIC 100000PF F 1608
C207	1-131-992-11	s	CAP, CERAMIC 100000PF F 1608
C208	1-131-992-11	s	CAP, CERAMIC 100000PF F 1608
C209	1-131-992-11	s	CAP, CERAMIC 100000PF F 1608
C210	1-131-992-11	s	CAP, CERAMIC 100000PF F 1608
C211	1-131-992-11	s	CAP, CERAMIC 100000PF F 1608
C212	1-131-992-11	s	CAP, CERAMIC 100000PF F 1608
C213	1-131-992-11	s	CAP, CERAMIC 100000PF F 1608
C214	1-131-992-11	s	CAP, CERAMIC 100000PF F 1608
C215	1-126-396-11	s	CAPACITOR,ELECT 47MF/16V(CHIP)
C216	1-126-396-11	s	CAPACITOR,ELECT 47MF/16V(CHIP)
C217	1-126-396-11	s	CAPACITOR,ELECT 47MF/16V(CHIP)
C218	1-131-992-11	s	CAP, CERAMIC 100000PF F 1608
CN2	1-794-226-11	o	CONNECTOR, BOARD TO BOARD 50P
CN100	1-794-228-11	o	CONNECTOR, ROUND TYPE (RECEPTA
CN101	1-815-660-91	s	CONNECTOR, BOARD TO BOARD 60P
CN201	1-793-111-21	s	CONNECTOR, MEMORY STICK
D101	8-719-048-17	s	DIODE MBRS130LT3
F201	⚠ 1-576-269-11	s	FUSE CHIP 3.15A/125V (6125)
FB201	1-414-553-11	s	MICRO INDUCTOR (CHIP TYPE)
FB202	1-414-553-11	s	MICRO INDUCTOR (CHIP TYPE)

(FP-133 BOARD [SUFFIX 11])

Ref. No. or Q'ty	Part No.	SP	Description
FB203	1-414-553-11	s	MICRO INDUCTOR (CHIP TYPE)
FB204	1-414-553-11	s	MICRO INDUCTOR (CHIP TYPE)
FB205	1-414-553-11	s	MICRO INDUCTOR (CHIP TYPE)
FB206	1-414-553-11	s	MICRO INDUCTOR (CHIP TYPE)
FB207	1-414-553-11	s	MICRO INDUCTOR (CHIP TYPE)
FB208	1-414-553-11	s	MICRO INDUCTOR (CHIP TYPE)
FB209	1-469-379-11	s	FERRITE, EMI (SMD)
FB210	1-469-379-11	s	FERRITE, EMI (SMD)
FL201	1-239-895-11	s	FILTER, EMI (SMD)
FL202	1-239-895-11	s	FILTER, EMI (SMD)
FL203	1-239-895-11	s	FILTER, EMI (SMD)
FL204	1-239-895-11	s	FILTER, EMI (SMD)
IC100	8-759-578-68	s	IC SN74LVCC4245APWR
IC101	8-759-549-15	s	IC SN74LV245APWR
IC102	8-759-549-15	s	IC SN74LV245APWR
IC103	8-759-549-15	s	IC SN74LV245APWR
IC104	8-759-549-15	s	IC SN74LV245APWR
IC105	8-759-549-15	s	IC SN74LV245APWR
IC106	8-759-491-50	s	IC TC74VHCT244AFT(EL)
IC107	8-759-491-50	s	IC TC74VHCT244AFT(EL)
IC108	8-759-491-50	s	IC TC74VHCT244AFT(EL)
IC109	8-759-491-50	s	IC TC74VHCT244AFT(EL)
IC110	8-759-491-50	s	IC TC74VHCT244AFT(EL)
IC111	6-700-556-01	s	IC M48T58Y-70MH1TRS
IC112	8-752-392-03	s	IC CXD1095BR
IC113	8-759-491-50	s	IC TC74VHCT244AFT(EL)
IC114	8-759-445-94	s	IC AK6480AM-E2
IC115	8-759-445-94	s	IC AK6480AM-E2
IC116	8-759-196-97	s	IC TC7SH32FU (TE85R)
IC117	8-759-271-86	s	IC TC7SH04FU
IC118	8-759-196-96	s	IC TC7SH08FU (TE85R)
IC119	8-759-523-84	s	IC TC74VHC14FT (EL)
IC120	8-759-523-94	s	IC TC74VHC32FT(EL)
IC122	8-759-523-94	s	IC TC74VHC32FT(EL)
IC123	8-759-491-46	s	IC TC74VHCT04AFT (EL)
IC124	8-759-271-84	s	IC TC7SH02FU
IC201	8-759-523-94	s	IC TC74VHC32FT(EL)
IC202	8-759-524-07	s	IC TC74VHC138FT(EL)
IC203	8-759-524-28	s	IC TC74VHC245FT(EL)
IC204	8-759-524-52	s	IC TC74VHC574FT(EL)
IC205	8-759-524-28	s	IC TC74VHC245FT(EL)
IC206	8-759-524-28	s	IC TC74VHC245FT(EL)
IC207	8-759-524-28	s	IC TC74VHC245FT(EL)
IC208	8-759-524-52	s	IC TC74VHC574FT(EL)
IC209	8-759-524-28	s	IC TC74VHC245FT(EL)
IC210	8-759-584-32	s	IC MB86189PFV-G-BND-ER
IC211	8-759-642-22	s	IC UPC29M05T-E2
L201	1-406-864-21	s	COIL,CHOKE 4.7UH
R102	1-218-740-11	s	RESISTOR,CHIP 100K 1/16W(1608)
R105	1-218-732-11	s	RESISTOR,CHIP 47K 1/16W(1608)
R106	1-218-732-11	s	RESISTOR,CHIP 47K 1/16W(1608)
R107	1-218-644-11	s	RESISTOR,CHIP 10 1/16W
R108	1-218-644-11	s	RESISTOR,CHIP 10 1/16W
R109	1-218-740-11	s	RESISTOR,CHIP 100K 1/16W(1608)
R110	1-218-740-11	s	RESISTOR,CHIP 100K 1/16W(1608)
R111	1-218-740-11	s	RESISTOR,CHIP 100K 1/16W(1608)
R112	1-218-716-11	s	RESISTOR,CHIP 10K 1/16W(1608)
R113	1-218-716-11	s	RESISTOR,CHIP 10K 1/16W(1608)

(FP-133 BOARD [SUFFIX 11])

Ref. No. or Q'ty	Part No.	SP	Description
R114	1-218-740-11	s	RESISTOR,CHIP 100K 1/16W(1608)
R115	1-218-740-11	s	RESISTOR,CHIP 100K 1/16W(1608)
R116	1-218-740-11	s	RESISTOR,CHIP 100K 1/16W(1608)
R117	1-218-740-11	s	RESISTOR,CHIP 100K 1/16W(1608)
R119	1-218-732-11	s	RESISTOR,CHIP 47K 1/16W(1608)
R120	1-218-732-11	s	RESISTOR,CHIP 47K 1/16W(1608)
R121	1-218-732-11	s	RESISTOR,CHIP 47K 1/16W(1608)
R201	1-218-644-11	s	RESISTOR,CHIP 10 1/16W
R202	1-218-644-11	s	RESISTOR,CHIP 10 1/16W
R203	1-218-644-11	s	RESISTOR,CHIP 10 1/16W
R204	1-218-644-11	s	RESISTOR,CHIP 10 1/16W
R205	1-218-644-11	s	RESISTOR,CHIP 10 1/16W
R206	1-218-644-11	s	RESISTOR,CHIP 10 1/16W
R207	1-218-644-11	s	RESISTOR,CHIP 10 1/16W
R208	1-218-644-11	s	RESISTOR,CHIP 10 1/16W
R209	1-218-644-11	s	RESISTOR,CHIP 10 1/16W
R210	1-218-644-11	s	RESISTOR,CHIP 10 1/16W
R211	1-218-644-11	s	RESISTOR,CHIP 10 1/16W
R212	1-218-644-11	s	RESISTOR,CHIP 10 1/16W
R213	1-218-644-11	s	RESISTOR,CHIP 10 1/16W
R214	1-218-644-11	s	RESISTOR,CHIP 10 1/16W
R215	1-218-644-11	s	RESISTOR,CHIP 10 1/16W
R216	1-218-644-11	s	RESISTOR,CHIP 10 1/16W
R217	1-218-644-11	s	RESISTOR,CHIP 10 1/16W
R218	1-218-644-11	s	RESISTOR,CHIP 10 1/16W
R219	1-218-644-11	s	RESISTOR,CHIP 10 1/16W
R220	1-218-644-11	s	RESISTOR,CHIP 10 1/16W
R221	1-218-644-11	s	RESISTOR,CHIP 10 1/16W
R222	1-218-644-11	s	RESISTOR,CHIP 10 1/16W
R223	1-218-644-11	s	RESISTOR,CHIP 10 1/16W
R224	1-218-644-11	s	RESISTOR,CHIP 10 1/16W
R225	1-218-644-11	s	RESISTOR,CHIP 10 1/16W
R226	1-218-644-11	s	RESISTOR,CHIP 10 1/16W
R227	1-218-644-11	s	RESISTOR,CHIP 10 1/16W
R228	1-218-644-11	s	RESISTOR,CHIP 10 1/16W
R229	1-218-644-11	s	RESISTOR,CHIP 10 1/16W
R230	1-218-644-11	s	RESISTOR,CHIP 10 1/16W
R231	1-218-644-11	s	RESISTOR,CHIP 10 1/16W
R232	1-218-644-11	s	RESISTOR,CHIP 10 1/16W
R233	1-218-644-11	s	RESISTOR,CHIP 10 1/16W
R234	1-218-644-11	s	RESISTOR,CHIP 10 1/16W
R235	1-216-864-11	s	CONDUCTOR, CHIP (1608)
R236	1-216-864-11	s	CONDUCTOR, CHIP (1608)
R237	1-216-864-11	s	CONDUCTOR, CHIP (1608)
R238	1-216-864-11	s	CONDUCTOR, CHIP (1608)
R239	1-216-864-11	s	CONDUCTOR, CHIP (1608)
R240	1-216-864-11	s	CONDUCTOR, CHIP (1608)
R241	1-216-864-11	s	CONDUCTOR, CHIP (1608)
R242	1-218-732-11	s	RESISTOR,CHIP 47K 1/16W(1608)
R243	1-218-740-11	s	RESISTOR,CHIP 100K 1/16W(1608)
R244	1-216-864-11	s	CONDUCTOR, CHIP (1608)
RB101	1-233-575-11	s	RES, CHIP NETWORK 22
RB102	1-233-575-11	s	RES, CHIP NETWORK 22
RB103	1-233-575-11	s	RES, CHIP NETWORK 22
RB104	1-233-575-11	s	RES, CHIP NETWORK 22
RB105	1-233-575-11	s	RES, CHIP NETWORK 22
RB106	1-233-575-11	s	RES, CHIP NETWORK 22
RB107	1-233-575-11	s	RES, CHIP NETWORK 22

(FP-133 BOARD [SUFFIX 11])

Ref. No. or Q'ty	Part No.	SP	Description
RB108	1-233-575-11	s	RES, CHIP NETWORK 22
RB109	1-233-575-11	s	RES, CHIP NETWORK 22
RB110	1-233-575-11	s	RES, CHIP NETWORK 22
RB111	1-233-575-11	s	RES, CHIP NETWORK 22
RB112	1-233-575-11	s	RES, CHIP NETWORK 22
RB113	1-234-397-11	s	NETWORK, RES (8 GANG) 100K
RB114	1-234-397-11	s	NETWORK, RES (8 GANG) 100K
RB115	1-234-397-11	s	NETWORK, RES (8 GANG) 100K
RB116	1-234-397-11	s	NETWORK, RES (8 GANG) 100K
RB117	1-234-397-11	s	NETWORK, RES (8 GANG) 100K
RB118	1-234-397-11	s	NETWORK, RES (8 GANG) 100K
RB119	1-234-397-11	s	NETWORK, RES (8 GANG) 100K
S100	1-571-640-31	s	SWITCH, SLIDE (2-2-2)
S101	1-571-640-31	s	SWITCH, SLIDE (2-2-2)

FP-133 BOARD [SUFFIX 12-]

[Lot No. 341 -] HDW-2000, M2000/P, M2100/P, A2100
[Lot No. 4C2 -] HDW-D2000
[Lot No. 462 -] HDW-S2000/P
[Lot No. 434 -] DVW-2000/P, M2000/P
[Lot No. 341 -] MSW-2000, M2000/P, A2000/P, M2100/P
[Lot No. 495 -] MSW-M2000E/P, M2100E/P

*1: [Lot No. 341 -] [Board No. suffix 12 -]
*2: [Lot No. 472 -] [Board No. suffix 13 -]

Ref. No. or Q'ty	Part No.	SP	Description
1pc	A-8344-893-A	s	MOUNTED CIRCUIT BOARD, FP-133
C101	1-131-992-11	s	CAP, CERAMIC 100000PF F 1608
C102	1-131-992-11	s	CAP, CERAMIC 100000PF F 1608
C103	1-131-992-11	s	CAP, CERAMIC 100000PF F 1608
C104	1-131-992-11	s	CAP, CERAMIC 100000PF F 1608
C105	1-131-992-11	s	CAP, CERAMIC 100000PF F 1608
C106	1-131-992-11	s	CAP, CERAMIC 100000PF F 1608
C107	1-131-992-11	s	CAP, CERAMIC 100000PF F 1608
C108	1-131-992-11	s	CAP, CERAMIC 100000PF F 1608
C109	1-131-992-11	s	CAP, CERAMIC 100000PF F 1608
C110	1-131-992-11	s	CAP, CERAMIC 100000PF F 1608
C111	1-131-992-11	s	CAP, CERAMIC 100000PF F 1608
C112	1-131-992-11	s	CAP, CERAMIC 100000PF F 1608
C113	1-131-992-11	s	CAP, CERAMIC 100000PF F 1608
C114	1-131-992-11	s	CAP, CERAMIC 100000PF F 1608
C115	1-131-992-11	s	CAP, CERAMIC 100000PF F 1608
C116	1-131-992-11	s	CAP, CERAMIC 100000PF F 1608
C117	1-131-992-11	s	CAP, CERAMIC 100000PF F 1608
C118	1-131-992-11	s	CAP, CERAMIC 100000PF F 1608
C119	1-131-992-11	s	CAP, CERAMIC 100000PF F 1608
C120	1-131-992-11	s	CAP, CERAMIC 100000PF F 1608
C121	1-131-992-11	s	CAP, CERAMIC 100000PF F 1608
C122	1-131-992-11	s	CAP, CERAMIC 100000PF F 1608
C123	1-131-992-11	s	CAP, CERAMIC 100000PF F 1608
C125	1-131-992-11	s	CAP, CERAMIC 100000PF F 1608
C126	1-131-992-11	s	CAP, CERAMIC 100000PF F 1608
C127	1-131-992-11	s	CAP, CERAMIC 100000PF F 1608
C201	1-131-992-11	s	CAP, CERAMIC 100000PF F 1608
C202	1-131-992-11	s	CAP, CERAMIC 100000PF F 1608
C203	1-131-992-11	s	CAP, CERAMIC 100000PF F 1608
C204	1-131-992-11	s	CAP, CERAMIC 100000PF F 1608
C205	1-131-992-11	s	CAP, CERAMIC 100000PF F 1608
C206	1-131-992-11	s	CAP, CERAMIC 100000PF F 1608
C207	1-131-992-11	s	CAP, CERAMIC 100000PF F 1608
C208	1-131-992-11	s	CAP, CERAMIC 100000PF F 1608
C209	1-131-992-11	s	CAP, CERAMIC 100000PF F 1608
C210	1-131-992-11	s	CAP, CERAMIC 100000PF F 1608
C211	1-131-992-11	s	CAP, CERAMIC 100000PF F 1608
C212	1-131-992-11	s	CAP, CERAMIC 100000PF F 1608
C213	1-131-992-11	s	CAP, CERAMIC 100000PF F 1608
C214	1-131-992-11	s	CAP, CERAMIC 100000PF F 1608
C215	1-126-396-11	s	CAPACITOR,ELECT 47MF/16V(CHIP)
C216	1-126-396-11	s	CAPACITOR,ELECT 47MF/16V(CHIP)
C217	1-126-396-11	s	CAPACITOR,ELECT 47MF/16V(CHIP)
C218	1-131-992-11	s	CAP, CERAMIC 100000PF F 1608
CN2	1-794-226-11	o	CONNECTOR, BOARD TO BOARD 50P
CN100	1-794-228-11	o	CONNECTOR, ROUND TYPE (RECEPTA
CN101	1-815-660-91	s	CONNECTOR, BOARD TO BOARD 60P
CN201	1-793-111-21	s	CONNECTOR, MEMORY STICK
D101	8-719-048-17	s	DIODE MBRS130LT3

(FP-133 BOARD [SUFFIX 12-])

Ref. No. or Q'ty	Part No.	SP	Description
F201	⚠ 1-576-269-11	s	FUSE CHIP 3.15A/125V (6125)
FB201	1-414-553-11	s	MICRO INDUCTOR (CHIP TYPE)
FB202	1-414-553-11	s	MICRO INDUCTOR (CHIP TYPE)
FB203	1-414-553-11	s	MICRO INDUCTOR (CHIP TYPE)
FB204	1-414-553-11	s	MICRO INDUCTOR (CHIP TYPE)
FB205	1-414-553-11	s	MICRO INDUCTOR (CHIP TYPE)
FB206	1-414-553-11	s	MICRO INDUCTOR (CHIP TYPE)
FB207	1-414-553-11	s	MICRO INDUCTOR (CHIP TYPE)
FB208	1-414-553-11	s	MICRO INDUCTOR (CHIP TYPE)
FB209	1-469-379-11	s	FERRITE, EMI (SMD)
FB210	1-469-379-11	s	FERRITE, EMI (SMD)
FL201	1-239-895-11	s	FILTER, EMI (SMD)
FL202	1-239-895-11	s	FILTER, EMI (SMD)
FL203	1-239-895-11	s	FILTER, EMI (SMD)
FL204	1-239-895-11	s	FILTER, EMI (SMD)
IC100	8-759-578-68	s	IC SN74LVCC4245APWR
IC101	8-759-549-15	s	IC SN74LV245APWR
IC102	8-759-549-15	s	IC SN74LV245APWR
IC103	8-759-549-15	s	IC SN74LV245APWR
IC104	8-759-549-15	s	IC SN74LV245APWR
IC105	8-759-549-15	s	IC SN74LV245APWR
IC106	8-759-491-50	s	IC TC74VHCT244AFT(EL)
IC107	8-759-491-50	s	IC TC74VHCT244AFT(EL)
IC108	8-759-491-50	s	IC TC74VHCT244AFT(EL)
IC109	8-759-491-50	s	IC TC74VHCT244AFT(EL)
IC110	8-759-491-50	s	IC TC74VHCT244AFT(EL)
IC111	6-700-556-01	s	IC M48T58Y-70MH1TRS
IC112	8-752-392-03	s	IC CXD1095BR
IC113	8-759-491-50	s	IC TC74VHCT244AFT(EL)
IC114	8-759-445-94	s	IC AK6480AM-E2
IC115	8-759-445-94	s	IC AK6480AM-E2
IC116 *2	6-706-489-01	s	IC TC7SH32FU(T5RSOYJF)
*1	8-759-196-97	s	IC TC7SH32FU (TE85R)
IC117 *2	6-706-484-01	s	IC TC7SH04FU(T5RSOYJF)
*1	8-759-271-86	s	IC TC7SH04FU
IC118 *2	6-706-487-01	s	IC TC7SH08FU(T5RSOYJF)
*1	8-759-196-96	s	IC TC7SH08FU (TE85R)
IC119	8-759-523-84	s	IC TC74VHC14FT (EL)
IC120	8-759-523-94	s	IC TC74VHC32FT(EL)
IC122	8-759-523-94	s	IC TC74VHC32FT(EL)
IC123	8-759-491-46	s	IC TC74VHCT04AFT (EL)
IC124 *2	6-706-483-01	s	IC TC7SH02FU(T5RSOYJF)
*1	8-759-271-84	s	IC TC7SH02FU
IC201	8-759-523-94	s	IC TC74VHC32FT(EL)
IC202	8-759-524-07	s	IC TC74VHC138FT(EL)
IC203	8-759-524-28	s	IC TC74VHC245FT(EL)
IC204	8-759-524-52	s	IC TC74VHC574FT(EL)
IC205	8-759-524-28	s	IC TC74VHC245FT(EL)
IC206	8-759-524-28	s	IC TC74VHC245FT(EL)
IC207	8-759-524-28	s	IC TC74VHC245FT(EL)
IC208	8-759-524-52	s	IC TC74VHC574FT(EL)
IC209	8-759-524-28	s	IC TC74VHC245FT(EL)
IC210	8-759-584-32	s	IC MB86189PFV-G-BND-ER
IC211	8-759-642-22	s	IC UPC29M05T-E2
L201	1-406-864-21	s	COIL,CHOKE 4.7UH
R102	1-218-895-11	s	RESISTOR,CHIP 100K 1/10W(1608)
R105	1-218-887-11	s	RESISTOR,CHIP 47K 1/10W (1608)
R106	1-218-887-11	s	RESISTOR,CHIP 47K 1/10W (1608)

(FP-133 BOARD [SUFFIX 12-])

Ref. No. or Q'ty	Part No.	SP	Description
R107	1-211-969-11	s	RESISTOR,CHIP 10 1/10W (1608)
R108	1-211-969-11	s	RESISTOR,CHIP 10 1/10W (1608)
R109	1-218-895-11	s	RESISTOR,CHIP 100K 1/10W(1608)
R110	1-218-895-11	s	RESISTOR,CHIP 100K 1/10W(1608)
R111	1-218-895-11	s	RESISTOR,CHIP 100K 1/10W(1608)
R112	1-218-871-11	s	RESISTOR,CHIP 10K 1/10W (1608)
R113	1-218-871-11	s	RESISTOR,CHIP 10K 1/10W (1608)
R114	1-218-895-11	s	RESISTOR,CHIP 100K 1/10W(1608)
R115	1-218-895-11	s	RESISTOR,CHIP 100K 1/10W(1608)
R116	1-218-895-11	s	RESISTOR,CHIP 100K 1/10W(1608)
R117	1-218-895-11	s	RESISTOR,CHIP 100K 1/10W(1608)
R119	1-218-887-11	s	RESISTOR,CHIP 47K 1/10W (1608)
R120	1-218-887-11	s	RESISTOR,CHIP 47K 1/10W (1608)
R121	1-218-887-11	s	RESISTOR,CHIP 47K 1/10W (1608)
R122	1-218-887-11	s	RESISTOR,CHIP 47K 1/10W (1608)
R123	1-218-887-11	s	RESISTOR,CHIP 47K 1/10W (1608)
R124	1-218-887-11	s	RESISTOR,CHIP 47K 1/10W (1608)
R201	1-211-969-11	s	RESISTOR,CHIP 10 1/10W (1608)
R202	1-211-969-11	s	RESISTOR,CHIP 10 1/10W (1608)
R203	1-211-969-11	s	RESISTOR,CHIP 10 1/10W (1608)
R204	1-211-969-11	s	RESISTOR,CHIP 10 1/10W (1608)
R205	1-211-969-11	s	RESISTOR,CHIP 10 1/10W (1608)
R206	1-211-969-11	s	RESISTOR,CHIP 10 1/10W (1608)
R207	1-211-969-11	s	RESISTOR,CHIP 10 1/10W (1608)
R208	1-211-969-11	s	RESISTOR,CHIP 10 1/10W (1608)
R209	1-211-969-11	s	RESISTOR,CHIP 10 1/10W (1608)
R210	1-211-969-11	s	RESISTOR,CHIP 10 1/10W (1608)
R211	1-211-969-11	s	RESISTOR,CHIP 10 1/10W (1608)
R212	1-211-969-11	s	RESISTOR,CHIP 10 1/10W (1608)
R213	1-211-969-11	s	RESISTOR,CHIP 10 1/10W (1608)
R214	1-211-969-11	s	RESISTOR,CHIP 10 1/10W (1608)
R215	1-211-969-11	s	RESISTOR,CHIP 10 1/10W (1608)
R216	1-211-969-11	s	RESISTOR,CHIP 10 1/10W (1608)
R217	1-211-969-11	s	RESISTOR,CHIP 10 1/10W (1608)
R218	1-211-969-11	s	RESISTOR,CHIP 10 1/10W (1608)
R219	1-211-969-11	s	RESISTOR,CHIP 10 1/10W (1608)
R220	1-211-969-11	s	RESISTOR,CHIP 10 1/10W (1608)
R221	1-211-969-11	s	RESISTOR,CHIP 10 1/10W (1608)
R222	1-211-969-11	s	RESISTOR,CHIP 10 1/10W (1608)
R223	1-211-969-11	s	RESISTOR,CHIP 10 1/10W (1608)
R224	1-211-969-11	s	RESISTOR,CHIP 10 1/10W (1608)
R225	1-211-969-11	s	RESISTOR,CHIP 10 1/10W (1608)
R226	1-211-969-11	s	RESISTOR,CHIP 10 1/10W (1608)
R227	1-211-969-11	s	RESISTOR,CHIP 10 1/10W (1608)
R228	1-211-969-11	s	RESISTOR,CHIP 10 1/10W (1608)
R229	1-211-969-11	s	RESISTOR,CHIP 10 1/10W (1608)
R230	1-211-969-11	s	RESISTOR,CHIP 10 1/10W (1608)
R231	1-211-969-11	s	RESISTOR,CHIP 10 1/10W (1608)
R232	1-211-969-11	s	RESISTOR,CHIP 10 1/10W (1608)
R233	1-211-969-11	s	RESISTOR,CHIP 10 1/10W (1608)
R234	1-211-969-11	s	RESISTOR,CHIP 10 1/10W (1608)
R235	1-216-864-11	s	CONDUCTOR, CHIP (1608)
R236	1-216-864-11	s	CONDUCTOR, CHIP (1608)
R237	1-216-864-11	s	CONDUCTOR, CHIP (1608)
R238	1-216-864-11	s	CONDUCTOR, CHIP (1608)
R239	1-216-864-11	s	CONDUCTOR, CHIP (1608)
R240	1-216-864-11	s	CONDUCTOR, CHIP (1608)
R241	1-216-864-11	s	CONDUCTOR, CHIP (1608)
R242	1-218-887-11	s	RESISTOR,CHIP 47K 1/10W (1608)

(FP-133 BOARD [SUFFIX 12-])

Ref. No. or Q'ty	Part No.	SP	Description
R243	1-218-895-11	s	RESISTOR,CHIP 100K 1/10W(1608)
R244	1-216-864-11	s	CONDUCTOR, CHIP (1608)
RB101	1-233-575-11	s	RES, CHIP NETWORK 22
RB102	1-233-575-11	s	RES, CHIP NETWORK 22
RB103	1-233-575-11	s	RES, CHIP NETWORK 22
RB104	1-233-575-11	s	RES, CHIP NETWORK 22
RB105	1-233-575-11	s	RES, CHIP NETWORK 22
RB106	1-233-575-11	s	RES, CHIP NETWORK 22
RB107	1-233-575-11	s	RES, CHIP NETWORK 22
RB108	1-233-575-11	s	RES, CHIP NETWORK 22
RB109	1-233-575-11	s	RES, CHIP NETWORK 22
RB110	1-233-575-11	s	RES, CHIP NETWORK 22
RB111	1-233-575-11	s	RES, CHIP NETWORK 22
RB112	1-233-575-11	s	RES, CHIP NETWORK 22
RB113	1-234-397-11	s	NETWORK, RES (8 GANG) 100K
RB114	1-234-397-11	s	NETWORK, RES (8 GANG) 100K
RB115	1-234-397-11	s	NETWORK, RES (8 GANG) 100K
RB116	1-234-397-11	s	NETWORK, RES (8 GANG) 100K
RB117	1-234-397-11	s	NETWORK, RES (8 GANG) 100K
RB118	1-234-397-11	s	NETWORK, RES (8 GANG) 100K
RB119	1-234-397-11	s	NETWORK, RES (8 GANG) 100K
S100	1-571-640-31	s	SWITCH, SLIDE (2-2-2)
S101	1-571-640-31	s	SWITCH, SLIDE (2-2-2)

FP-134 BOARD [SUFFIX 11]

[Lot No. 261 - 335] HDW-2000, M2000/P, M2100/P, A2100
MSW-M2000/P, A2000/P, M2100/P

Ref. No. or Q'ty	Part No.	SP	Description
1pc	A-8344-895-A	s	MOUNTED CIRCUIT BOARD, FP-134
1pc	1-794-233-11	o	CONNECTOR, CARD (PC CARD)
2pcs	7-628-253-35	s	SCREW,+PS 2X8
C101	1-164-156-11	s	CAPACITOR,CERAMIC 0.1MF/25V F
C102	1-126-396-11	s	CAPACITOR,ELECT 47MF/16V(CHIP)
C103	1-164-156-11	s	CAPACITOR,CERAMIC 0.1MF/25V F
C104	1-164-156-11	s	CAPACITOR,CERAMIC 0.1MF/25V F
C105	1-164-156-11	s	CAPACITOR,CERAMIC 0.1MF/25V F
C106	1-164-156-11	s	CAPACITOR,CERAMIC 0.1MF/25V F
C107	1-164-156-11	s	CAPACITOR,CERAMIC 0.1MF/25V F
C108	1-164-156-11	s	CAPACITOR,CERAMIC 0.1MF/25V F
C109	1-164-156-11	s	CAPACITOR,CERAMIC 0.1MF/25V F
CN3	1-794-232-11	o	CONNECTOR, CARD (PC CARD)
CN101	1-815-196-11	s	CONNECTOR 60P
IC101	8-759-549-15	s	IC SN74LV245APWR
IC102	8-759-549-15	s	IC SN74LV245APWR
IC103	8-759-549-15	s	IC SN74LV245APWR
IC104	8-759-549-15	s	IC SN74LV245APWR
IC105	8-759-549-15	s	IC SN74LV245APWR
IC106	8-759-549-15	s	IC SN74LV245APWR
R101	1-218-740-11	s	RESISTOR,CHIP 100K 1/16W(1608)
R102	1-218-732-11	s	RESISTOR,CHIP 47K 1/16W(1608)
R103	1-218-732-11	s	RESISTOR,CHIP 47K 1/16W(1608)
R104	1-218-732-11	s	RESISTOR,CHIP 47K 1/16W(1608)
R105	1-218-732-11	s	RESISTOR,CHIP 47K 1/16W(1608)
R106	1-218-740-11	s	RESISTOR,CHIP 100K 1/16W(1608)
R107	1-218-732-11	s	RESISTOR,CHIP 47K 1/16W(1608)
R108	1-218-740-11	s	RESISTOR,CHIP 100K 1/16W(1608)
R109	1-218-732-11	s	RESISTOR,CHIP 47K 1/16W(1608)
R110	1-216-857-11	s	RESISTOR,CHIP 1M 1/10W(1608)
R111	1-218-732-11	s	RESISTOR,CHIP 47K 1/16W(1608)
R112	1-218-732-11	s	RESISTOR,CHIP 47K 1/16W(1608)
R113	1-218-732-11	s	RESISTOR,CHIP 47K 1/16W(1608)
R114	1-218-668-11	s	RESISTOR,CHIP 100 1/16W (1608)
R116	1-218-668-11	s	RESISTOR,CHIP 100 1/16W (1608)
R118	1-218-732-11	s	RESISTOR,CHIP 47K 1/16W(1608)
R119	1-218-732-11	s	RESISTOR,CHIP 47K 1/16W(1608)
R120	1-218-732-11	s	RESISTOR,CHIP 47K 1/16W(1608)
RB101	1-233-575-11	s	RES, CHIP NETWORK 22

FP-134 BOARD [SUFFIX 12-]

[Lot No. 341 -] HDW-2000, M2000/P, M2100/P, A2100
MSW-M2000/P, A2000/P, M2100/P

Ref. No. or Q'ty	Part No.	SP	Description
1pc	A-8344-895-A	s	MOUNTED CIRCUIT BOARD, FP-134
C101	1-131-992-11	s	CAP, CERAMIC 100000PF F 1608
C102	1-126-396-11	s	CAPACITOR,ELECT 47MF/16V(CHIP)
C103	1-131-992-11	s	CAP, CERAMIC 100000PF F 1608
C104	1-131-992-11	s	CAP, CERAMIC 100000PF F 1608
C105	1-131-992-11	s	CAP, CERAMIC 100000PF F 1608
C106	1-131-992-11	s	CAP, CERAMIC 100000PF F 1608
C107	1-131-992-11	s	CAP, CERAMIC 100000PF F 1608
C108	1-131-992-11	s	CAP, CERAMIC 100000PF F 1608
C109	1-131-992-11	s	CAP, CERAMIC 100000PF F 1608
CN3	1-794-232-11	o	CONNECTOR, CARD (PC CARD)
CN101	1-815-196-11	s	CONNECTOR 60P
IC101	8-759-549-15	s	IC SN74LV245APWR
IC102	8-759-549-15	s	IC SN74LV245APWR
IC103	8-759-549-15	s	IC SN74LV245APWR
IC104	8-759-549-15	s	IC SN74LV245APWR
IC105	8-759-549-15	s	IC SN74LV245APWR
IC106	8-759-549-15	s	IC SN74LV245APWR
R101	1-218-887-11	s	RESISTOR,CHIP 47K 1/10W (1608)
R102	1-218-887-11	s	RESISTOR,CHIP 47K 1/10W (1608)
R103	1-218-887-11	s	RESISTOR,CHIP 47K 1/10W (1608)
R104	1-218-887-11	s	RESISTOR,CHIP 47K 1/10W (1608)
R105	1-218-887-11	s	RESISTOR,CHIP 47K 1/10W (1608)
R106	1-218-895-11	s	RESISTOR,CHIP 100K 1/10W(1608)
R107	1-218-887-11	s	RESISTOR,CHIP 47K 1/10W (1608)
R108	1-218-895-11	s	RESISTOR,CHIP 100K 1/10W(1608)
R109	1-218-887-11	s	RESISTOR,CHIP 47K 1/10W (1608)
R110	1-216-857-11	s	RESISTOR,CHIP 1M 1/10W(1608)
R111	1-218-887-11	s	RESISTOR,CHIP 47K 1/10W (1608)
R112	1-218-887-11	s	RESISTOR,CHIP 47K 1/10W (1608)
R113	1-218-887-11	s	RESISTOR,CHIP 47K 1/10W (1608)
R114	1-218-823-11	s	RESISTOR,CHIP 100 1/10W (1608)
R116	1-218-823-11	s	RESISTOR,CHIP 100 1/10W (1608)
R118	1-218-887-11	s	RESISTOR,CHIP 47K 1/10W (1608)
R119	1-218-887-11	s	RESISTOR,CHIP 47K 1/10W (1608)
R120	1-218-887-11	s	RESISTOR,CHIP 47K 1/10W (1608)
RB101	1-233-575-11	s	RES, CHIP NETWORK 22

HIF-1 BOARD [SUFFIX 21] for HDW RECORDER

[Lot No. 261 - 2B2] HDW-2000, M2000/P

Ref. No. or Q'ty	Part No.	SP	Description
1pc	A-8327-055-B	s	MOUNTED CIRCUIT BOARD, HIF-1
6pcs	7-682-902-11	s	SCREW +PWH 2.6X5
1pc	3-179-084-01	s	LEVER(R),PRINTED C.BOARD
1pc	3-179-085-01	s	LEVER(L),PRINTED C.BOARD
C54	1-107-826-11	s	CAPACITOR,CHIP CERAMIC 0.1MF
C55	1-107-826-11	s	CAPACITOR,CHIP CERAMIC 0.1MF
C56	1-107-826-11	s	CAPACITOR,CHIP CERAMIC 0.1MF
C57	1-107-826-11	s	CAPACITOR,CHIP CERAMIC 0.1MF
C59	1-107-826-11	s	CAPACITOR,CHIP CERAMIC 0.1MF
C60	1-107-826-11	s	CAPACITOR,CHIP CERAMIC 0.1MF
C61	1-107-826-11	s	CAPACITOR,CHIP CERAMIC 0.1MF
C62	1-107-826-11	s	CAPACITOR,CHIP CERAMIC 0.1MF
C63	1-107-826-11	s	CAPACITOR,CHIP CERAMIC 0.1MF
C64	1-107-826-11	s	CAPACITOR,CHIP CERAMIC 0.1MF
C65	1-107-826-11	s	CAPACITOR,CHIP CERAMIC 0.1MF
C66	1-107-826-11	s	CAPACITOR,CHIP CERAMIC 0.1MF
C67	1-107-826-11	s	CAPACITOR,CHIP CERAMIC 0.1MF
C68	1-107-826-11	s	CAPACITOR,CHIP CERAMIC 0.1MF
C100	1-107-826-11	s	CAPACITOR,CHIP CERAMIC 0.1MF
C101	1-107-826-11	s	CAPACITOR,CHIP CERAMIC 0.1MF
C102	1-107-826-11	s	CAPACITOR,CHIP CERAMIC 0.1MF
C103	1-107-826-11	s	CAPACITOR,CHIP CERAMIC 0.1MF
C104	1-107-826-11	s	CAPACITOR,CHIP CERAMIC 0.1MF
C105	1-107-826-11	s	CAPACITOR,CHIP CERAMIC 0.1MF
C106	1-107-826-11	s	CAPACITOR,CHIP CERAMIC 0.1MF
C110	1-107-826-11	s	CAPACITOR,CHIP CERAMIC 0.1MF
C111	1-107-826-11	s	CAPACITOR,CHIP CERAMIC 0.1MF
C112	1-107-826-11	s	CAPACITOR,CHIP CERAMIC 0.1MF
C133	1-107-826-11	s	CAPACITOR,CHIP CERAMIC 0.1MF
C134	1-107-826-11	s	CAPACITOR,CHIP CERAMIC 0.1MF
C135	1-107-826-11	s	CAPACITOR,CHIP CERAMIC 0.1MF
C136	1-107-826-11	s	CAPACITOR,CHIP CERAMIC 0.1MF
C137	1-107-826-11	s	CAPACITOR,CHIP CERAMIC 0.1MF
C138	1-107-826-11	s	CAPACITOR,CHIP CERAMIC 0.1MF
C139	1-107-826-11	s	CAPACITOR,CHIP CERAMIC 0.1MF
C140	1-107-826-11	s	CAPACITOR,CHIP CERAMIC 0.1MF
C141	1-107-826-11	s	CAPACITOR,CHIP CERAMIC 0.1MF
C142	1-107-826-11	s	CAPACITOR,CHIP CERAMIC 0.1MF
C150	1-107-826-11	s	CAPACITOR,CHIP CERAMIC 0.1MF
C151	1-107-826-11	s	CAPACITOR,CHIP CERAMIC 0.1MF
C152	1-107-826-11	s	CAPACITOR,CHIP CERAMIC 0.1MF
C153	1-107-826-11	s	CAPACITOR,CHIP CERAMIC 0.1MF
C154	1-107-826-11	s	CAPACITOR,CHIP CERAMIC 0.1MF
C155	1-107-826-11	s	CAPACITOR,CHIP CERAMIC 0.1MF
C156	1-107-826-11	s	CAPACITOR,CHIP CERAMIC 0.1MF
C157	1-107-826-11	s	CAPACITOR,CHIP CERAMIC 0.1MF
C158	1-107-826-11	s	CAPACITOR,CHIP CERAMIC 0.1MF
C159	1-107-826-11	s	CAPACITOR,CHIP CERAMIC 0.1MF
C160	1-107-826-11	s	CAPACITOR,CHIP CERAMIC 0.1MF
C161	1-107-826-11	s	CAPACITOR,CHIP CERAMIC 0.1MF
C162	1-107-826-11	s	CAPACITOR,CHIP CERAMIC 0.1MF
C163	1-107-826-11	s	CAPACITOR,CHIP CERAMIC 0.1MF
C164	1-107-826-11	s	CAPACITOR,CHIP CERAMIC 0.1MF
C165	1-107-826-11	s	CAPACITOR,CHIP CERAMIC 0.1MF
C166	1-107-826-11	s	CAPACITOR,CHIP CERAMIC 0.1MF
C167	1-107-826-11	s	CAPACITOR,CHIP CERAMIC 0.1MF
C168	1-107-826-11	s	CAPACITOR,CHIP CERAMIC 0.1MF

(HIF-1 BOARD [SUFFIX 21] for HDW RECORDER)

Ref. No. or Q'ty	Part No.	SP	Description
C169	1-107-826-11	s	CAPACITOR,CHIP CERAMIC 0.1MF
C170	1-107-826-11	s	CAPACITOR,CHIP CERAMIC 0.1MF
C171	1-107-826-11	s	CAPACITOR,CHIP CERAMIC 0.1MF
C172	1-107-826-11	s	CAPACITOR,CHIP CERAMIC 0.1MF
C173	1-107-826-11	s	CAPACITOR,CHIP CERAMIC 0.1MF
C174	1-107-826-11	s	CAPACITOR,CHIP CERAMIC 0.1MF
C175	1-107-826-11	s	CAPACITOR,CHIP CERAMIC 0.1MF
C176	1-107-826-11	s	CAPACITOR,CHIP CERAMIC 0.1MF
C200	1-107-826-11	s	CAPACITOR,CHIP CERAMIC 0.1MF
C201	1-107-826-11	s	CAPACITOR,CHIP CERAMIC 0.1MF
C204	1-107-826-11	s	CAPACITOR,CHIP CERAMIC 0.1MF
C207	1-107-826-11	s	CAPACITOR,CHIP CERAMIC 0.1MF
C208	1-107-826-11	s	CAPACITOR,CHIP CERAMIC 0.1MF
C209	1-107-826-11	s	CAPACITOR,CHIP CERAMIC 0.1MF
C210	1-107-826-11	s	CAPACITOR,CHIP CERAMIC 0.1MF
C211	1-107-826-11	s	CAPACITOR,CHIP CERAMIC 0.1MF
C212	1-107-826-11	s	CAPACITOR,CHIP CERAMIC 0.1MF
C213	1-107-826-11	s	CAPACITOR,CHIP CERAMIC 0.1MF
C214	1-107-826-11	s	CAPACITOR,CHIP CERAMIC 0.1MF
C216	1-107-826-11	s	CAPACITOR,CHIP CERAMIC 0.1MF
C217	1-107-826-11	s	CAPACITOR,CHIP CERAMIC 0.1MF
C218	1-107-826-11	s	CAPACITOR,CHIP CERAMIC 0.1MF
C219	1-107-826-11	s	CAPACITOR,CHIP CERAMIC 0.1MF
C220	1-107-826-11	s	CAPACITOR,CHIP CERAMIC 0.1MF
C221	1-107-826-11	s	CAPACITOR,CHIP CERAMIC 0.1MF
C222	1-107-826-11	s	CAPACITOR,CHIP CERAMIC 0.1MF
C223	1-107-826-11	s	CAPACITOR,CHIP CERAMIC 0.1MF
C224	1-107-826-11	s	CAPACITOR,CHIP CERAMIC 0.1MF
C300	1-107-826-11	s	CAPACITOR,CHIP CERAMIC 0.1MF
C301	1-107-826-11	s	CAPACITOR,CHIP CERAMIC 0.1MF
C302	1-107-826-11	s	CAPACITOR,CHIP CERAMIC 0.1MF
C303	1-107-826-11	s	CAPACITOR,CHIP CERAMIC 0.1MF
C304	1-107-826-11	s	CAPACITOR,CHIP CERAMIC 0.1MF
C305	1-107-826-11	s	CAPACITOR,CHIP CERAMIC 0.1MF
C306	1-107-826-11	s	CAPACITOR,CHIP CERAMIC 0.1MF
C307	1-107-826-11	s	CAPACITOR,CHIP CERAMIC 0.1MF
C308	1-107-826-11	s	CAPACITOR,CHIP CERAMIC 0.1MF
C309	1-107-826-11	s	CAPACITOR,CHIP CERAMIC 0.1MF
C310	1-107-826-11	s	CAPACITOR,CHIP CERAMIC 0.1MF
C311	1-107-826-11	s	CAPACITOR,CHIP CERAMIC 0.1MF
C312	1-107-826-11	s	CAPACITOR,CHIP CERAMIC 0.1MF
C313	1-107-826-11	s	CAPACITOR,CHIP CERAMIC 0.1MF
C314	1-107-826-11	s	CAPACITOR,CHIP CERAMIC 0.1MF
C315	1-107-826-11	s	CAPACITOR,CHIP CERAMIC 0.1MF
C316	1-107-826-11	s	CAPACITOR,CHIP CERAMIC 0.1MF
C317	1-164-227-11	s	CAPACITOR,CERAMIC 0.022MF/25V
C318	1-107-826-11	s	CAPACITOR,CHIP CERAMIC 0.1MF
C319	1-107-826-11	s	CAPACITOR,CHIP CERAMIC 0.1MF
C320	1-107-826-11	s	CAPACITOR,CHIP CERAMIC 0.1MF
C321	1-107-826-11	s	CAPACITOR,CHIP CERAMIC 0.1MF
C322	1-107-826-11	s	CAPACITOR,CHIP CERAMIC 0.1MF
C323	1-107-826-11	s	CAPACITOR,CHIP CERAMIC 0.1MF
C324	1-107-826-11	s	CAPACITOR,CHIP CERAMIC 0.1MF
C325	1-107-826-11	s	CAPACITOR,CHIP CERAMIC 0.1MF
C326	1-107-826-11	s	CAPACITOR,CHIP CERAMIC 0.1MF
C327	1-107-826-11	s	CAPACITOR,CHIP CERAMIC 0.1MF
C328	1-107-826-11	s	CAPACITOR,CHIP CERAMIC 0.1MF
C329	1-107-826-11	s	CAPACITOR,CHIP CERAMIC 0.1MF
C330	1-107-826-11	s	CAPACITOR,CHIP CERAMIC 0.1MF

(HIF-1 BOARD [SUFFIX 21] for HDW RECORDER)

Ref. No. or Q'ty	Part No.	SP	Description
C331	1-107-826-11	s	CAPACITOR,CHIP CERAMIC 0.1MF
C332	1-107-826-11	s	CAPACITOR,CHIP CERAMIC 0.1MF
C333	1-107-826-11	s	CAPACITOR,CHIP CERAMIC 0.1MF
C334	1-107-826-11	s	CAPACITOR,CHIP CERAMIC 0.1MF
C335	1-107-826-11	s	CAPACITOR,CHIP CERAMIC 0.1MF
C336	1-107-826-11	s	CAPACITOR,CHIP CERAMIC 0.1MF
C337	1-107-826-11	s	CAPACITOR,CHIP CERAMIC 0.1MF
C338	1-107-826-11	s	CAPACITOR,CHIP CERAMIC 0.1MF
C339	1-107-826-11	s	CAPACITOR,CHIP CERAMIC 0.1MF
C340	1-107-826-11	s	CAPACITOR,CHIP CERAMIC 0.1MF
C341	1-107-826-11	s	CAPACITOR,CHIP CERAMIC 0.1MF
C342	1-107-826-11	s	CAPACITOR,CHIP CERAMIC 0.1MF
C343	1-107-826-11	s	CAPACITOR,CHIP CERAMIC 0.1MF
C344	1-107-826-11	s	CAPACITOR,CHIP CERAMIC 0.1MF
C345	1-107-826-11	s	CAPACITOR,CHIP CERAMIC 0.1MF
C346	1-107-826-11	s	CAPACITOR,CHIP CERAMIC 0.1MF
C347	1-128-707-11	s	CAPACITOR,POLYPYRROLE 220MF
C348	1-128-707-11	s	CAPACITOR,POLYPYRROLE 220MF
C400	1-107-826-11	s	CAPACITOR,CHIP CERAMIC 0.1MF
C401	1-107-826-11	s	CAPACITOR,CHIP CERAMIC 0.1MF
C402	1-107-826-11	s	CAPACITOR,CHIP CERAMIC 0.1MF
C403	1-107-826-11	s	CAPACITOR,CHIP CERAMIC 0.1MF
C404	1-107-826-11	s	CAPACITOR,CHIP CERAMIC 0.1MF
C405	1-107-826-11	s	CAPACITOR,CHIP CERAMIC 0.1MF
C406	1-107-826-11	s	CAPACITOR,CHIP CERAMIC 0.1MF
C407	1-107-826-11	s	CAPACITOR,CHIP CERAMIC 0.1MF
C408	1-107-826-11	s	CAPACITOR,CHIP CERAMIC 0.1MF
C409	1-107-826-11	s	CAPACITOR,CHIP CERAMIC 0.1MF
C410	1-107-826-11	s	CAPACITOR,CHIP CERAMIC 0.1MF
C411	1-107-826-11	s	CAPACITOR,CHIP CERAMIC 0.1MF
C412	1-107-826-11	s	CAPACITOR,CHIP CERAMIC 0.1MF
C413	1-107-826-11	s	CAPACITOR,CHIP CERAMIC 0.1MF
C414	1-107-826-11	s	CAPACITOR,CHIP CERAMIC 0.1MF
C415	1-107-826-11	s	CAPACITOR,CHIP CERAMIC 0.1MF
C416	1-107-826-11	s	CAPACITOR,CHIP CERAMIC 0.1MF
C417	1-107-826-11	s	CAPACITOR,CHIP CERAMIC 0.1MF
C418	1-107-826-11	s	CAPACITOR,CHIP CERAMIC 0.1MF
C419	1-107-826-11	s	CAPACITOR,CHIP CERAMIC 0.1MF
C420	1-107-826-11	s	CAPACITOR,CHIP CERAMIC 0.1MF
C421	1-107-826-11	s	CAPACITOR,CHIP CERAMIC 0.1MF
C422	1-107-826-11	s	CAPACITOR,CHIP CERAMIC 0.1MF
C423	1-107-826-11	s	CAPACITOR,CHIP CERAMIC 0.1MF
C424	1-107-826-11	s	CAPACITOR,CHIP CERAMIC 0.1MF
C425	1-107-826-11	s	CAPACITOR,CHIP CERAMIC 0.1MF
C426	1-107-826-11	s	CAPACITOR,CHIP CERAMIC 0.1MF
C427	1-107-826-11	s	CAPACITOR,CHIP CERAMIC 0.1MF
C428	1-107-826-11	s	CAPACITOR,CHIP CERAMIC 0.1MF
C429	1-107-826-11	s	CAPACITOR,CHIP CERAMIC 0.1MF
C430	1-107-826-11	s	CAPACITOR,CHIP CERAMIC 0.1MF
C431	1-107-826-11	s	CAPACITOR,CHIP CERAMIC 0.1MF
C432	1-107-826-11	s	CAPACITOR,CHIP CERAMIC 0.1MF
C433	1-107-826-11	s	CAPACITOR,CHIP CERAMIC 0.1MF
C434	1-107-826-11	s	CAPACITOR,CHIP CERAMIC 0.1MF
C435	1-107-826-11	s	CAPACITOR,CHIP CERAMIC 0.1MF
C436	1-107-826-11	s	CAPACITOR,CHIP CERAMIC 0.1MF
C437	1-107-826-11	s	CAPACITOR,CHIP CERAMIC 0.1MF
C438	1-107-826-11	s	CAPACITOR,CHIP CERAMIC 0.1MF
C439	1-107-826-11	s	CAPACITOR,CHIP CERAMIC 0.1MF
C440	1-107-826-11	s	CAPACITOR,CHIP CERAMIC 0.1MF

(HIF-1 BOARD [SUFFIX 21] for HDW RECORDER)

Ref. No. or Q'ty	Part No.	SP	Description
C441	1-107-826-11	s	CAPACITOR,CHIP CERAMIC 0.1MF
C442	1-107-826-11	s	CAPACITOR,CHIP CERAMIC 0.1MF
C443	1-107-826-11	s	CAPACITOR,CHIP CERAMIC 0.1MF
C444	1-107-826-11	s	CAPACITOR,CHIP CERAMIC 0.1MF
C500	1-107-826-11	s	CAPACITOR,CHIP CERAMIC 0.1MF
C501	1-107-826-11	s	CAPACITOR,CHIP CERAMIC 0.1MF
C502	1-107-826-11	s	CAPACITOR,CHIP CERAMIC 0.1MF
C503	1-107-826-11	s	CAPACITOR,CHIP CERAMIC 0.1MF
C504	1-107-826-11	s	CAPACITOR,CHIP CERAMIC 0.1MF
C505	1-107-826-11	s	CAPACITOR,CHIP CERAMIC 0.1MF
C506	1-107-826-11	s	CAPACITOR,CHIP CERAMIC 0.1MF
C507	1-107-826-11	s	CAPACITOR,CHIP CERAMIC 0.1MF
C508	1-107-826-11	s	CAPACITOR,CHIP CERAMIC 0.1MF
C509	1-107-826-11	s	CAPACITOR,CHIP CERAMIC 0.1MF
C510	1-107-826-11	s	CAPACITOR,CHIP CERAMIC 0.1MF
C511	1-107-826-11	s	CAPACITOR,CHIP CERAMIC 0.1MF
C512	1-107-826-11	s	CAPACITOR,CHIP CERAMIC 0.1MF
C513	1-107-826-11	s	CAPACITOR,CHIP CERAMIC 0.1MF
C514	1-107-826-11	s	CAPACITOR,CHIP CERAMIC 0.1MF
C515	1-107-826-11	s	CAPACITOR,CHIP CERAMIC 0.1MF
C516	1-107-826-11	s	CAPACITOR,CHIP CERAMIC 0.1MF
C517	1-107-826-11	s	CAPACITOR,CHIP CERAMIC 0.1MF
C518	1-107-826-11	s	CAPACITOR,CHIP CERAMIC 0.1MF
C519	1-107-826-11	s	CAPACITOR,CHIP CERAMIC 0.1MF
C520	1-107-826-11	s	CAPACITOR,CHIP CERAMIC 0.1MF
C521	1-107-826-11	s	CAPACITOR,CHIP CERAMIC 0.1MF
C522	1-107-826-11	s	CAPACITOR,CHIP CERAMIC 0.1MF
C523	1-107-826-11	s	CAPACITOR,CHIP CERAMIC 0.1MF
C524	1-107-826-11	s	CAPACITOR,CHIP CERAMIC 0.1MF
C525	1-107-826-11	s	CAPACITOR,CHIP CERAMIC 0.1MF
C526	1-107-826-11	s	CAPACITOR,CHIP CERAMIC 0.1MF
C527	1-107-826-11	s	CAPACITOR,CHIP CERAMIC 0.1MF
C528	1-107-826-11	s	CAPACITOR,CHIP CERAMIC 0.1MF
C529	1-107-826-11	s	CAPACITOR,CHIP CERAMIC 0.1MF
C530	1-107-826-11	s	CAPACITOR,CHIP CERAMIC 0.1MF
C531	1-107-826-11	s	CAPACITOR,CHIP CERAMIC 0.1MF
C532	1-107-826-11	s	CAPACITOR,CHIP CERAMIC 0.1MF
C533	1-107-826-11	s	CAPACITOR,CHIP CERAMIC 0.1MF
C534	1-107-826-11	s	CAPACITOR,CHIP CERAMIC 0.1MF
C535	1-107-826-11	s	CAPACITOR,CHIP CERAMIC 0.1MF
C536	1-107-826-11	s	CAPACITOR,CHIP CERAMIC 0.1MF
C537	1-107-826-11	s	CAPACITOR,CHIP CERAMIC 0.1MF
C600	1-107-826-11	s	CAPACITOR,CHIP CERAMIC 0.1MF
C601	1-107-826-11	s	CAPACITOR,CHIP CERAMIC 0.1MF
C602	1-107-826-11	s	CAPACITOR,CHIP CERAMIC 0.1MF
C603	1-107-826-11	s	CAPACITOR,CHIP CERAMIC 0.1MF
C604	1-107-826-11	s	CAPACITOR,CHIP CERAMIC 0.1MF
C605	1-107-826-11	s	CAPACITOR,CHIP CERAMIC 0.1MF
C606	1-107-826-11	s	CAPACITOR,CHIP CERAMIC 0.1MF
C607	1-107-826-11	s	CAPACITOR,CHIP CERAMIC 0.1MF
C608	1-107-826-11	s	CAPACITOR,CHIP CERAMIC 0.1MF
C609	1-107-826-11	s	CAPACITOR,CHIP CERAMIC 0.1MF
C610	1-107-826-11	s	CAPACITOR,CHIP CERAMIC 0.1MF
C611	1-107-826-11	s	CAPACITOR,CHIP CERAMIC 0.1MF
C612	1-107-826-11	s	CAPACITOR,CHIP CERAMIC 0.1MF
C613	1-107-826-11	s	CAPACITOR,CHIP CERAMIC 0.1MF
C614	1-107-826-11	s	CAPACITOR,CHIP CERAMIC 0.1MF
C615	1-128-707-11	s	CAPACITOR,POLYPYRROLE 220MF
C616	1-131-603-11	s	CAP, POLYPYRROLE 100MF

(HIF-1 BOARD [SUFFIX 21] for HDW RECORDER)

Ref. No. or Q'ty	Part No.	SP	Description
C617	1-107-826-11	s	CAPACITOR,CHIP CERAMIC 0.1MF
C618	1-107-826-11	s	CAPACITOR,CHIP CERAMIC 0.1MF
C619	1-107-826-11	s	CAPACITOR,CHIP CERAMIC 0.1MF
C620	1-107-826-11	s	CAPACITOR,CHIP CERAMIC 0.1MF
C621	1-107-826-11	s	CAPACITOR,CHIP CERAMIC 0.1MF
C622	1-107-826-11	s	CAPACITOR,CHIP CERAMIC 0.1MF
C623	1-107-826-11	s	CAPACITOR,CHIP CERAMIC 0.1MF
C624	1-107-826-11	s	CAPACITOR,CHIP CERAMIC 0.1MF
C625	1-107-826-11	s	CAPACITOR,CHIP CERAMIC 0.1MF
C626	1-107-826-11	s	CAPACITOR,CHIP CERAMIC 0.1MF
C627	1-107-826-11	s	CAPACITOR,CHIP CERAMIC 0.1MF
C628	1-107-826-11	s	CAPACITOR,CHIP CERAMIC 0.1MF
C629	1-107-826-11	s	CAPACITOR,CHIP CERAMIC 0.1MF
C630	1-107-826-11	s	CAPACITOR,CHIP CERAMIC 0.1MF
C631	1-107-826-11	s	CAPACITOR,CHIP CERAMIC 0.1MF
C632	1-107-826-11	s	CAPACITOR,CHIP CERAMIC 0.1MF
C633	1-107-826-11	s	CAPACITOR,CHIP CERAMIC 0.1MF
C634	1-107-826-11	s	CAPACITOR,CHIP CERAMIC 0.1MF
C635	1-107-826-11	s	CAPACITOR,CHIP CERAMIC 0.1MF
C636	1-107-826-11	s	CAPACITOR,CHIP CERAMIC 0.1MF
C637	1-107-826-11	s	CAPACITOR,CHIP CERAMIC 0.1MF
C638	1-107-826-11	s	CAPACITOR,CHIP CERAMIC 0.1MF
C639	1-107-826-11	s	CAPACITOR,CHIP CERAMIC 0.1MF
C700	1-107-826-11	s	CAPACITOR,CHIP CERAMIC 0.1MF
C701	1-107-826-11	s	CAPACITOR,CHIP CERAMIC 0.1MF
C702	1-107-826-11	s	CAPACITOR,CHIP CERAMIC 0.1MF
C703	1-162-919-11	s	CAPACITOR,CERAMIC 22PF/50V CH
C704	1-162-928-11	s	CAPACITOR,CERAMIC 120PF/50V CH
C705	1-107-826-11	s	CAPACITOR,CHIP CERAMIC 0.1MF
C706	1-125-891-11	s	CAPACITOR CERAMIC 0.47MF/10V
C707	1-125-891-11	s	CAPACITOR CERAMIC 0.47MF/10V
C708	1-107-826-11	s	CAPACITOR,CHIP CERAMIC 0.1MF
C709	1-107-826-11	s	CAPACITOR,CHIP CERAMIC 0.1MF
C710	1-107-826-11	s	CAPACITOR,CHIP CERAMIC 0.1MF
C711	1-162-928-11	s	CAPACITOR,CERAMIC 120PF/50V CH
C712	1-107-826-11	s	CAPACITOR,CHIP CERAMIC 0.1MF
C713	1-107-826-11	s	CAPACITOR,CHIP CERAMIC 0.1MF
C714	1-107-826-11	s	CAPACITOR,CHIP CERAMIC 0.1MF
C715	1-107-826-11	s	CAPACITOR,CHIP CERAMIC 0.1MF
C716	1-107-826-11	s	CAPACITOR,CHIP CERAMIC 0.1MF
C717	1-107-826-11	s	CAPACITOR,CHIP CERAMIC 0.1MF
C718	1-162-924-11	s	CAPACITOR,CERAMIC 56PF/50V CH
C719	1-107-826-11	s	CAPACITOR,CHIP CERAMIC 0.1MF
C720	1-162-928-11	s	CAPACITOR,CERAMIC 120PF/50V CH
C721	1-107-826-11	s	CAPACITOR,CHIP CERAMIC 0.1MF
C722	1-107-826-11	s	CAPACITOR,CHIP CERAMIC 0.1MF
C723	1-162-928-11	s	CAPACITOR,CERAMIC 120PF/50V CH
C724	1-107-826-11	s	CAPACITOR,CHIP CERAMIC 0.1MF
C725	1-107-826-11	s	CAPACITOR,CHIP CERAMIC 0.1MF
C726	1-107-826-11	s	CAPACITOR,CHIP CERAMIC 0.1MF
C727	1-107-826-11	s	CAPACITOR,CHIP CERAMIC 0.1MF
C733	1-107-826-11	s	CAPACITOR,CHIP CERAMIC 0.1MF
C734	1-107-826-11	s	CAPACITOR,CHIP CERAMIC 0.1MF
C735	1-107-826-11	s	CAPACITOR,CHIP CERAMIC 0.1MF
C736	1-107-826-11	s	CAPACITOR,CHIP CERAMIC 0.1MF
C737	1-107-826-11	s	CAPACITOR,CHIP CERAMIC 0.1MF
C738	1-107-826-11	s	CAPACITOR,CHIP CERAMIC 0.1MF
C745	1-107-826-11	s	CAPACITOR,CHIP CERAMIC 0.1MF
C746	1-107-826-11	s	CAPACITOR,CHIP CERAMIC 0.1MF

(HIF-1 BOARD [SUFFIX 21] for HDW RECORDER)

Ref. No. or Q'ty	Part No.	SP	Description
C747	1-107-826-11	s	CAPACITOR,CHIP CERAMIC 0.1MF
C748	1-107-826-11	s	CAPACITOR,CHIP CERAMIC 0.1MF
C749	1-104-851-11	s	CAPACITOR,TANTALUM 10MF/10V
C750	1-107-826-11	s	CAPACITOR,CHIP CERAMIC 0.1MF
C751	1-107-826-11	s	CAPACITOR,CHIP CERAMIC 0.1MF
C800	1-128-707-11	s	CAPACITOR,POLYPYRROLE 220MF
C801	1-131-603-11	s	CAP, POLYPYRROLE 100MF
C802	1-107-826-11	s	CAPACITOR,CHIP CERAMIC 0.1MF
C803	1-107-826-11	s	CAPACITOR,CHIP CERAMIC 0.1MF
C804	1-107-826-11	s	CAPACITOR,CHIP CERAMIC 0.1MF
C805	1-107-826-11	s	CAPACITOR,CHIP CERAMIC 0.1MF
C806	1-107-826-11	s	CAPACITOR,CHIP CERAMIC 0.1MF
C807	1-107-826-11	s	CAPACITOR,CHIP CERAMIC 0.1MF
C808	1-107-826-11	s	CAPACITOR,CHIP CERAMIC 0.1MF
C809	1-107-826-11	s	CAPACITOR,CHIP CERAMIC 0.1MF
C810	1-107-826-11	s	CAPACITOR,CHIP CERAMIC 0.1MF
C811	1-107-826-11	s	CAPACITOR,CHIP CERAMIC 0.1MF
C812	1-107-826-11	s	CAPACITOR,CHIP CERAMIC 0.1MF
C813	1-107-826-11	s	CAPACITOR,CHIP CERAMIC 0.1MF
C814	1-107-826-11	s	CAPACITOR,CHIP CERAMIC 0.1MF
C815	1-107-826-11	s	CAPACITOR,CHIP CERAMIC 0.1MF
C816	1-107-826-11	s	CAPACITOR,CHIP CERAMIC 0.1MF
C817	1-107-826-11	s	CAPACITOR,CHIP CERAMIC 0.1MF
C818	1-107-826-11	s	CAPACITOR,CHIP CERAMIC 0.1MF
C819	1-107-826-11	s	CAPACITOR,CHIP CERAMIC 0.1MF
C820	1-107-826-11	s	CAPACITOR,CHIP CERAMIC 0.1MF
C821	1-107-826-11	s	CAPACITOR,CHIP CERAMIC 0.1MF
C822	1-107-826-11	s	CAPACITOR,CHIP CERAMIC 0.1MF
C823	1-107-826-11	s	CAPACITOR,CHIP CERAMIC 0.1MF
C824	1-107-826-11	s	CAPACITOR,CHIP CERAMIC 0.1MF
C825	1-107-826-11	s	CAPACITOR,CHIP CERAMIC 0.1MF
C826	1-107-826-11	s	CAPACITOR,CHIP CERAMIC 0.1MF
C827	1-107-826-11	s	CAPACITOR,CHIP CERAMIC 0.1MF
C828	1-107-826-11	s	CAPACITOR,CHIP CERAMIC 0.1MF
C829	1-107-826-11	s	CAPACITOR,CHIP CERAMIC 0.1MF
C830	1-107-826-11	s	CAPACITOR,CHIP CERAMIC 0.1MF
C831	1-107-826-11	s	CAPACITOR,CHIP CERAMIC 0.1MF
C832	1-107-826-11	s	CAPACITOR,CHIP CERAMIC 0.1MF
C833	1-127-950-11	s	CAPACITOR,CHIP FILM 0.01MF
C834	1-107-826-11	s	CAPACITOR,CHIP CERAMIC 0.1MF
C835	1-127-950-11	s	CAPACITOR,CHIP FILM 0.01MF
C836	1-127-950-11	s	CAPACITOR,CHIP FILM 0.01MF
C837	1-127-956-11	s	CAPACITOR,CHIP FILM 0.1MF
C838	1-107-826-11	s	CAPACITOR,CHIP CERAMIC 0.1MF
C839	1-127-956-11	s	CAPACITOR,CHIP FILM 0.1MF
C840	1-127-956-11	s	CAPACITOR,CHIP FILM 0.1MF
C841	1-107-826-11	s	CAPACITOR,CHIP CERAMIC 0.1MF
C842	1-107-826-11	s	CAPACITOR,CHIP CERAMIC 0.1MF
C843	1-107-826-11	s	CAPACITOR,CHIP CERAMIC 0.1MF
C844	1-107-826-11	s	CAPACITOR,CHIP CERAMIC 0.1MF
C845	1-107-826-11	s	CAPACITOR,CHIP CERAMIC 0.1MF
C846	1-107-826-11	s	CAPACITOR,CHIP CERAMIC 0.1MF
C847	1-107-826-11	s	CAPACITOR,CHIP CERAMIC 0.1MF
C848	1-107-826-11	s	CAPACITOR,CHIP CERAMIC 0.1MF
C849	1-107-826-11	s	CAPACITOR,CHIP CERAMIC 0.1MF
C850	1-107-826-11	s	CAPACITOR,CHIP CERAMIC 0.1MF
C851	1-107-826-11	s	CAPACITOR,CHIP CERAMIC 0.1MF
C852	1-107-826-11	s	CAPACITOR,CHIP CERAMIC 0.1MF
C853	1-107-826-11	s	CAPACITOR,CHIP CERAMIC 0.1MF

(HIF-1 BOARD [SUFFIX 21] for HDW RECORDER)

Ref. No. or Q'ty	Part No.	SP	Description
C854	1-107-826-11	s	CAPACITOR,CHIP CERAMIC 0.1MF
C855	1-107-826-11	s	CAPACITOR,CHIP CERAMIC 0.1MF
C856	1-107-826-11	s	CAPACITOR,CHIP CERAMIC 0.1MF
C857	1-107-826-11	s	CAPACITOR,CHIP CERAMIC 0.1MF
C858	1-107-826-11	s	CAPACITOR,CHIP CERAMIC 0.1MF
C859	1-107-826-11	s	CAPACITOR,CHIP CERAMIC 0.1MF
C860	1-107-826-11	s	CAPACITOR,CHIP CERAMIC 0.1MF
C861	1-107-826-11	s	CAPACITOR,CHIP CERAMIC 0.1MF
C862	1-107-826-11	s	CAPACITOR,CHIP CERAMIC 0.1MF
C863	1-107-826-11	s	CAPACITOR,CHIP CERAMIC 0.1MF
C864	1-107-826-11	s	CAPACITOR,CHIP CERAMIC 0.1MF
C865	1-107-826-11	s	CAPACITOR,CHIP CERAMIC 0.1MF
C866	1-104-851-11	s	CAPACITOR,TANTALUM 10MF/10V
C867	1-107-826-11	s	CAPACITOR,CHIP CERAMIC 0.1MF
C870	1-127-950-11	s	CAPACITOR,CHIP FILM 0.01MF
C871	1-127-956-11	s	CAPACITOR,CHIP FILM 0.1MF
C872	1-107-826-11	s	CAPACITOR,CHIP CERAMIC 0.1MF
C873	1-107-826-11	s	CAPACITOR,CHIP CERAMIC 0.1MF
C874	1-107-826-11	s	CAPACITOR,CHIP CERAMIC 0.1MF
C875	1-107-826-11	s	CAPACITOR,CHIP CERAMIC 0.1MF
C880	1-162-923-11	s	CAPACITOR,CERAMIC 47PF/50V CH
C881	1-162-970-11	s	CAPACITOR CERAMIC 0.01MF/25V B
C882	1-107-826-11	s	CAPACITOR,CHIP CERAMIC 0.1MF
C883	1-162-927-11	s	CAPACITOR,CERAMIC 100PF/50V CH
C884	1-162-923-11	s	CAPACITOR,CERAMIC 47PF/50V CH
C885	1-107-826-11	s	CAPACITOR,CHIP CERAMIC 0.1MF
C886	1-107-826-11	s	CAPACITOR,CHIP CERAMIC 0.1MF
C900	1-162-970-11	s	CAPACITOR CERAMIC 0.01MF/25V B
C902	1-107-826-11	s	CAPACITOR,CHIP CERAMIC 0.1MF
C903	1-107-826-11	s	CAPACITOR,CHIP CERAMIC 0.1MF
C904	1-107-826-11	s	CAPACITOR,CHIP CERAMIC 0.1MF
C905	1-107-826-11	s	CAPACITOR,CHIP CERAMIC 0.1MF
C907	1-107-826-11	s	CAPACITOR,CHIP CERAMIC 0.1MF
C908	1-107-826-11	s	CAPACITOR,CHIP CERAMIC 0.1MF
C909	1-107-826-11	s	CAPACITOR,CHIP CERAMIC 0.1MF
C910	1-162-970-11	s	CAPACITOR CERAMIC 0.01MF/25V B
C911	1-107-826-11	s	CAPACITOR,CHIP CERAMIC 0.1MF
C912	1-107-826-11	s	CAPACITOR,CHIP CERAMIC 0.1MF
C913	1-107-826-11	s	CAPACITOR,CHIP CERAMIC 0.1MF
C914	1-107-826-11	s	CAPACITOR,CHIP CERAMIC 0.1MF
C915	1-107-826-11	s	CAPACITOR,CHIP CERAMIC 0.1MF
C916	1-107-826-11	s	CAPACITOR,CHIP CERAMIC 0.1MF
C917	1-107-826-11	s	CAPACITOR,CHIP CERAMIC 0.1MF
C918	1-107-826-11	s	CAPACITOR,CHIP CERAMIC 0.1MF
C919	1-107-826-11	s	CAPACITOR,CHIP CERAMIC 0.1MF
C920	1-107-826-11	s	CAPACITOR,CHIP CERAMIC 0.1MF
C921	1-107-826-11	s	CAPACITOR,CHIP CERAMIC 0.1MF
C922	1-107-826-11	s	CAPACITOR,CHIP CERAMIC 0.1MF
C923	1-107-826-11	s	CAPACITOR,CHIP CERAMIC 0.1MF
C924	1-107-826-11	s	CAPACITOR,CHIP CERAMIC 0.1MF
C925	1-162-927-11	s	CAPACITOR,CERAMIC 100PF/50V CH
C926	1-162-927-11	s	CAPACITOR,CERAMIC 100PF/50V CH
C927	1-162-927-11	s	CAPACITOR,CERAMIC 100PF/50V CH
C1000	1-131-603-11	s	CAP, POLYPYRROLE 100MF
C1001	1-131-603-11	s	CAP, POLYPYRROLE 100MF
C1002	1-131-603-11	s	CAP, POLYPYRROLE 100MF
C1003	1-107-826-11	s	CAPACITOR,CHIP CERAMIC 0.1MF
C1004	1-107-826-11	s	CAPACITOR,CHIP CERAMIC 0.1MF
C1005	1-107-826-11	s	CAPACITOR,CHIP CERAMIC 0.1MF

(HIF-1 BOARD [SUFFIX 21] for HDW RECORDER)

Ref. No. or Q'ty	Part No.	SP	Description
C1006	1-107-826-11	s	CAPACITOR,CHIP CERAMIC 0.1MF
C1007	1-107-826-11	s	CAPACITOR,CHIP CERAMIC 0.1MF
C1008	1-107-826-11	s	CAPACITOR,CHIP CERAMIC 0.1MF
C1009	1-107-826-11	s	CAPACITOR,CHIP CERAMIC 0.1MF
C1010	1-107-826-11	s	CAPACITOR,CHIP CERAMIC 0.1MF
C1011	1-107-826-11	s	CAPACITOR,CHIP CERAMIC 0.1MF
C1012	1-107-826-11	s	CAPACITOR,CHIP CERAMIC 0.1MF
C1013	1-131-603-11	s	CAP, POLYPYRROLE 100MF
C1014	1-131-603-11	s	CAP, POLYPYRROLE 100MF
C1015	1-131-603-11	s	CAP, POLYPYRROLE 100MF
C1016	1-131-603-11	s	CAP, POLYPYRROLE 100MF
C1017	1-131-603-11	s	CAP, POLYPYRROLE 100MF
C1019	1-131-603-11	s	CAP, POLYPYRROLE 100MF
C1022	1-162-970-11	s	CAPACITOR CERAMIC 0.01MF/25V B
C1025	1-107-826-11	s	CAPACITOR,CHIP CERAMIC 0.1MF
C1026	1-107-826-11	s	CAPACITOR,CHIP CERAMIC 0.1MF
C1029	1-115-416-11	s	CAPACITOR,CERAMIC 1000PF/25V
C1031	1-107-826-11	s	CAPACITOR,CHIP CERAMIC 0.1MF
C1032	1-107-826-11	s	CAPACITOR,CHIP CERAMIC 0.1MF
C1033	1-109-994-11	s	CAPACITOR,CHIP CERAMIC 2.2MF B
C1034	1-107-826-11	s	CAPACITOR,CHIP CERAMIC 0.1MF
C1035	1-109-994-11	s	CAPACITOR,CHIP CERAMIC 2.2MF B
C1037	1-115-416-11	s	CAPACITOR,CERAMIC 1000PF/25V
C1038	1-162-970-11	s	CAPACITOR CERAMIC 0.01MF/25V B
C1060	1-107-826-11	s	CAPACITOR,CHIP CERAMIC 0.1MF
C1061	1-107-826-11	s	CAPACITOR,CHIP CERAMIC 0.1MF
C1062	1-107-826-11	s	CAPACITOR,CHIP CERAMIC 0.1MF
C1063	1-107-826-11	s	CAPACITOR,CHIP CERAMIC 0.1MF
C1064	1-131-603-11	s	CAP, POLYPYRROLE 100MF
C1065	1-131-603-11	s	CAP, POLYPYRROLE 100MF
C1066	1-131-603-11	s	CAP, POLYPYRROLE 100MF
C1067	1-107-826-11	s	CAPACITOR,CHIP CERAMIC 0.1MF
CN2	1-815-085-91	o	CONNECTOR, BOARD TO BOARD 90P
CN900	1-580-756-21	o	PIN, CONNECTOR 7P
D700	8-719-820-41	s	DIODE 1SS302
D1000	8-719-066-98	s	DIODE RB051L-40
D1001	8-719-938-75	s	DIODE SB05-05CP (RECTI)
D1002	8-719-938-75	s	DIODE SB05-05CP (RECTI)
D1003	8-719-066-98	s	DIODE RB051L-40
F1000	⚠ 1-576-270-11	s	FUSE CHIP 4A/125V (6125)
F1001	⚠ 1-576-270-11	s	FUSE CHIP 4A/125V (6125)
IC50	8-759-392-77	s	IC SN74LVC245APW (E20)
IC51	8-759-392-77	s	IC SN74LVC245APW (E20)
IC52	8-759-549-15	s	IC SN74LV245APWR
IC53	8-759-549-15	s	IC SN74LV245APWR
IC54	8-759-549-15	s	IC SN74LV245APWR
IC55	8-759-293-90	s	IC MSM514221B-30JS
IC56	8-759-549-15	s	IC SN74LV245APWR
IC58	6-801-208-01	o	IC EPC2LC20-HIF-IC58-V1.00
IC59	8-759-293-90	s	IC MSM514221B-30JS
IC60	8-759-293-90	s	IC MSM514221B-30JS
IC100	8-759-475-46	s	IC TC74LCX240FT(EL)
IC101	8-759-491-46	s	IC TC74VHCT04AFT (EL)
IC102	8-759-389-48	s	IC 74LCX16374MTDX
IC103	8-759-389-48	s	IC 74LCX16374MTDX
IC104	8-759-389-48	s	IC 74LCX16374MTDX
IC105	8-759-389-48	s	IC 74LCX16374MTDX

(HIF-1 BOARD [SUFFIX 21] for HDW RECORDER)

Ref. No. or Q'ty	Part No.	SP	Description
IC107	8-759-712-32	s	IC SN65LVDS389DBTR
IC108	8-759-712-32	s	IC SN65LVDS389DBTR
IC109	8-759-712-32	s	IC SN65LVDS389DBTR
IC113	8-759-639-85	s	IC SN65LVDS31DR
IC114	8-759-598-13	s	IC CDC2510CPWR
IC115	8-759-592-44	s	IC TC7SZ04FU(TE85R)
IC116	8-759-651-59	s	IC SN74CBTLV3245APWR
IC117	8-759-651-59	s	IC SN74CBTLV3245APWR
IC118	8-759-651-59	s	IC SN74CBTLV3245APWR
IC119	8-759-694-36	s	IC SN74CBTLV3257PWR
IC151	6-702-238-11	s	IC HY57V643220CT-7TR
IC152	6-702-238-11	s	IC HY57V643220CT-7TR
IC200	8-759-712-31	s	IC SN65LVDT388DBTR
IC201	8-759-712-31	s	IC SN65LVDT388DBTR
IC206	8-759-598-13	s	IC CDC2510CPWR
IC207	8-759-592-44	s	IC TC7SZ04FU(TE85R)
IC208	8-759-389-48	s	IC 74LCX16374MTDX
IC209	8-759-389-48	s	IC 74LCX16374MTDX
IC210	8-759-598-13	s	IC CDC2510CPWR
IC211	6-701-499-01	s	IC SN74LVC821APWR
IC212	6-701-499-01	s	IC SN74LVC821APWR
IC213	6-701-499-01	s	IC SN74LVC821APWR
IC215	8-759-592-44	s	IC TC7SZ04FU(TE85R)
IC216	8-759-475-55	s	IC TC74LCX574FT(EL)
IC217	8-759-475-55	s	IC TC74LCX574FT(EL)
IC218	8-759-475-55	s	IC TC74LCX574FT(EL)
IC219	8-759-271-86	s	IC TC7SH04FU
IC220	6-700-238-01	s	IC SN74ALVC245PWR
IC221	6-700-238-01	s	IC SN74ALVC245PWR
IC222	6-700-238-01	s	IC SN74ALVC245PWR
IC223	8-759-271-86	s	IC TC7SH04FU
IC224	8-759-712-31	s	IC SN65LVDT388DBTR
IC300	8-759-549-15	s	IC SN74LV245APWR
IC301	6-702-238-11	s	IC HY57V643220CT-7TR
IC302	6-702-238-11	s	IC HY57V643220CT-7TR
IC303	6-702-238-11	s	IC HY57V643220CT-7TR
IC304	6-702-238-11	s	IC HY57V643220CT-7TR
IC305	8-759-592-47	s	IC TC7SZ08FU(TE85R)
IC400	8-759-592-44	s	IC TC7SZ04FU(TE85R)
IC402	8-759-491-51	s	IC TC74VHCT245AFT(EL)
IC403	8-759-539-53	s	IC MB90096PF-G-139-BND(ER)
IC404	8-759-392-77	s	IC SN74LVC245APW (E20)
IC405	8-759-647-49	s	IC AL422B-TEL
IC406	8-759-647-49	s	IC AL422B-TEL
IC407	8-759-647-49	s	IC AL422B-TEL
IC409	8-759-389-48	s	IC 74LCX16374MTDX
IC410	8-759-389-48	s	IC 74LCX16374MTDX
IC411	8-759-389-48	s	IC 74LCX16374MTDX
IC412	8-759-647-49	s	IC AL422B-TEL
IC413	8-759-647-49	s	IC AL422B-TEL
IC414	8-759-647-49	s	IC AL422B-TEL
IC415	8-759-271-86	s	IC TC7SH04FU
IC416	8-759-196-96	s	IC TC7SH08FU (TE85R)
IC417	8-759-475-35	s	IC TC74LCX04FT(EL)
IC418	8-759-651-59	s	IC SN74CBTLV3245APWR
IC419	8-759-651-59	s	IC SN74CBTLV3245APWR
IC420	8-759-651-59	s	IC SN74CBTLV3245APWR
IC601	6-702-238-11	s	IC HY57V643220CT-7TR
IC602	8-759-392-77	s	IC SN74LVC245APW (E20)

(HIF-1 BOARD [SUFFIX 21] for HDW RECORDER)

Ref. No. or Q'ty	Part No.	SP	Description
IC603	8-759-392-77	s	IC SN74LVC245APW (E20)
IC604	8-759-392-77	s	IC SN74LVC245APW (E20)
IC605	8-759-271-86	s	IC TC7SH04FU
IC606	8-759-392-77	s	IC SN74LVC245APW (E20)
IC607	8-759-392-77	s	IC SN74LVC245APW (E20)
IC608	8-759-392-77	s	IC SN74LVC245APW (E20)
IC700	8-759-987-27	s	IC LM1881M
IC701	8-759-573-91	s	IC AD8055ART-REEL7
IC702	8-759-528-99	s	IC TC74VHC221AFT(EL)
IC703	8-759-392-77	s	IC SN74LVC245APW (E20)
IC704	8-759-639-86	s	IC SN65LVDS32DR
IC705	8-759-573-91	s	IC AD8055ART-REEL7
IC706	8-759-523-95	s	IC TC74VHC74FT(EL)
IC707	6-701-453-01	s	IC SN75207BNSR
IC708	8-759-528-99	s	IC TC74VHC221AFT(EL)
IC709	8-759-196-96	s	IC TC7SH08FU (TE85R)
IC710	8-759-694-36	s	IC SN74CBTLV3257PWR
IC715	8-759-598-13	s	IC CDC2510CPWR
IC716	8-759-639-85	s	IC SN65LVDS31DR
IC719	8-759-392-77	s	IC SN74LVC245APW (E20)
IC720	8-759-392-77	s	IC SN74LVC245APW (E20)
IC721	8-759-392-77	s	IC SN74LVC245APW (E20)
IC722	8-759-392-77	s	IC SN74LVC245APW (E20)
IC723	8-759-196-96	s	IC TC7SH08FU (TE85R)
IC724	8-759-475-55	s	IC TC74LCX574FT(EL)
IC800	8-759-678-15	s	IC TLV2231CDBVR
IC801	8-759-678-15	s	IC TLV2231CDBVR
IC802	8-759-485-79	s	IC TC7SET08FU (TE85L)
IC803	8-759-183-53	s	IC TL431CPK-E2
IC804	8-759-592-47	s	IC TC7SZ08FU(TE85R)
IC805	8-759-524-08	s	IC TC74VHC139FT(EL)
IC806	8-759-592-47	s	IC TC7SZ08FU(TE85R)
IC807	8-759-592-47	s	IC TC7SZ08FU(TE85R)
IC808	8-759-592-47	s	IC TC7SZ08FU(TE85R)
IC809	8-759-564-49	s	IC TC7W53FU-TE12R
IC810	8-759-592-47	s	IC TC7SZ08FU(TE85R)
IC811	8-759-592-47	s	IC TC7SZ08FU(TE85R)
IC812	8-759-564-49	s	IC TC7W53FU-TE12R
IC813	8-759-678-15	s	IC TLV2231CDBVR
IC814	8-759-592-49	s	IC TC7SZ125FU(TE85R)
IC815	8-759-592-49	s	IC TC7SZ125FU(TE85R)
IC816	8-759-592-49	s	IC TC7SZ125FU(TE85R)
IC817	8-759-592-49	s	IC TC7SZ125FU(TE85R)
IC870	8-759-678-15	s	IC TLV2231CDBVR
IC871	8-759-592-47	s	IC TC7SZ08FU(TE85R)
IC880	8-759-528-99	s	IC TC74VHC221AFT(EL)
IC881	8-759-669-78	s	IC TLC2933IPWR-12
IC883	8-759-669-78	s	IC TLC2933IPWR-12
IC900	8-759-549-15	s	IC SN74LV245APWR
IC901	8-759-549-15	s	IC SN74LV245APWR
IC902	8-759-549-15	s	IC SN74LV245APWR
IC903	8-759-549-15	s	IC SN74LV245APWR
IC905	8-759-549-15	s	IC SN74LV245APWR
IC906	8-759-549-15	s	IC SN74LV245APWR
IC907	8-759-549-15	s	IC SN74LV245APWR
IC908	8-759-549-15	s	IC SN74LV245APWR
IC909	8-759-661-00	s	IC ISPLSI2192VE-100LT128
IC910	8-759-549-15	s	IC SN74LV245APWR
IC911	8-759-523-94	s	IC TC74VHC32FT(EL)

(HIF-1 BOARD [SUFFIX 21] for HDW RECORDER)

Ref. No. or Q'ty	Part No.	SP	Description
IC912	8-759-549-15	s	IC SN74LV245APWR
IC913	8-759-491-47	s	IC TC74VHCT08FT (EL)
IC914	8-759-523-81	s	IC TC74VHC08FT(EL)
IC915	8-759-327-60	s	IC TC7W125FU-TE12R
IC916	8-759-524-10	s	IC TC74VHC157FT (EL)
IC917	8-759-082-59	s	IC TC7W32FU
IC918	8-759-196-97	s	IC TC7SH32FU (TE85R)
IC919	8-759-271-86	s	IC TC7SH04FU
IC1000	8-759-539-90	s	IC LM2940SX-5.0
IC1001	8-759-539-89	s	IC LM2990SX-5.0
IC1002	8-759-642-22	s	IC UPC29M05T-E2
IC1004	8-759-597-57	s	IC LTC1628CG#TR
IC1005	8-759-524-10	s	IC TC74VHC157FT (EL)
IC1006	8-759-549-15	s	IC SN74LV245APWR
IC1007	8-759-549-15	s	IC SN74LV245APWR
IC1008	8-759-524-10	s	IC TC74VHC157FT (EL)
IC1010	8-759-491-46	s	IC TC74VHCT04AFT (EL)
IS58	1-251-093-11	s	SOCKET,IC
L700	1-410-377-31	s	INDUCTOR,CHIP 4.7UH (3225)
L1000	1-406-864-21	s	COIL,CHOKE 4.7UH
L1001	1-406-864-21	s	COIL,CHOKE 4.7UH
L1002	1-406-864-21	s	COIL,CHOKE 4.7UH
L1003	1-406-864-21	s	COIL,CHOKE 4.7UH
L1004	1-406-864-21	s	COIL,CHOKE 4.7UH
L1005	1-469-970-11	s	INDUCTOR, (SMD) 15UH
L1006	1-469-970-11	s	INDUCTOR, (SMD) 15UH
L1007	1-406-864-21	s	COIL,CHOKE 4.7UH
Q100	8-729-140-63	s	TRANSISTOR 2SA1611-M5M6
Q101	8-729-029-14	s	TRANSISTOR DTC144EUA-T106
Q200	8-729-140-63	s	TRANSISTOR 2SA1611-M5M6
Q201	8-729-029-14	s	TRANSISTOR DTC144EUA-T106
Q202	8-729-140-63	s	TRANSISTOR 2SA1611-M5M6
Q203	8-729-029-14	s	TRANSISTOR DTC144EUA-T106
Q700	8-729-140-63	s	TRANSISTOR 2SA1611-M5M6
Q701	8-729-117-32	s	TRANSISTOR 2SC4177
Q702	8-729-143-07	s	TRANSISTOR 2SA1610-Y33
Q1000	8-729-047-85	s	TRANSISTOR SI4416DY-T1
Q1001	8-729-047-85	s	TRANSISTOR SI4416DY-T1
Q1002	8-729-047-85	s	TRANSISTOR SI4416DY-T1
Q1003	8-729-047-85	s	TRANSISTOR SI4416DY-T1
R50	1-218-871-11	s	RESISTOR,CHIP 10K 1/16W (1608)
R51	1-218-871-11	s	RESISTOR,CHIP 10K 1/16W (1608)
R52	1-218-871-11	s	RESISTOR,CHIP 10K 1/16W (1608)
R53	1-218-847-11	s	RESISTOR, CHIP 1K 1/16W (1608)
R54	1-218-847-11	s	RESISTOR, CHIP 1K 1/16W (1608)
R55	1-218-847-11	s	RESISTOR, CHIP 1K 1/16W (1608)
R57	1-218-847-11	s	RESISTOR, CHIP 1K 1/16W (1608)
R58	1-218-847-11	s	RESISTOR, CHIP 1K 1/16W (1608)
R59	1-218-847-11	s	RESISTOR, CHIP 1K 1/16W (1608)
R60	1-218-847-11	s	RESISTOR, CHIP 1K 1/16W (1608)
R61	1-218-847-11	s	RESISTOR, CHIP 1K 1/16W (1608)
R62	1-218-863-11	s	RESISTOR,CHIP 4.7K 1/16W(1608)
R63	1-218-863-11	s	RESISTOR,CHIP 4.7K 1/16W(1608)
R64	1-218-863-11	s	RESISTOR,CHIP 4.7K 1/16W(1608)
R65	1-218-863-11	s	RESISTOR,CHIP 4.7K 1/16W(1608)
R66	1-218-740-11	s	RESISTOR,CHIP 100K 1/16W(1608)
R68	1-216-296-00	s	CONDUCTOR, CHIP (3216)

(HIF-1 BOARD [SUFFIX 21] for HDW RECORDER)

Ref. No. or Q'ty	Part No.	SP	Description
R100	1-218-644-11	s	RESISTOR,CHIP 10 1/16W
R101	1-218-644-11	s	RESISTOR,CHIP 10 1/16W
R102	1-218-644-11	s	RESISTOR,CHIP 10 1/16W
R103	1-218-644-11	s	RESISTOR,CHIP 10 1/16W
R104	1-218-660-91	s	RESISTOR,CHIP 47 1/16W (1608)
R105	1-218-660-91	s	RESISTOR,CHIP 47 1/16W (1608)
R106	1-218-660-91	s	RESISTOR,CHIP 47 1/16W (1608)
R107	1-218-660-91	s	RESISTOR,CHIP 47 1/16W (1608)
R108	1-218-660-91	s	RESISTOR,CHIP 47 1/16W (1608)
R109	1-218-660-91	s	RESISTOR,CHIP 47 1/16W (1608)
R110	1-218-644-11	s	RESISTOR,CHIP 10 1/16W
R111	1-218-660-91	s	RESISTOR,CHIP 47 1/16W (1608)
R112	1-218-660-91	s	RESISTOR,CHIP 47 1/16W (1608)
R113	1-218-660-91	s	RESISTOR,CHIP 47 1/16W (1608)
R114	1-218-660-91	s	RESISTOR,CHIP 47 1/16W (1608)
R115	1-218-660-91	s	RESISTOR,CHIP 47 1/16W (1608)
R123	1-218-692-11	s	RESISTOR,CHIP 1.0K 1/16W(1608)
R124	1-218-692-11	s	RESISTOR,CHIP 1.0K 1/16W(1608)
R125	1-218-660-91	s	RESISTOR,CHIP 47 1/16W (1608)
R126	1-218-652-11	s	RESISTOR,CHIP 22 1/16W (1608)
R127	1-218-652-11	s	RESISTOR,CHIP 22 1/16W (1608)
R128	1-218-652-11	s	RESISTOR,CHIP 22 1/16W (1608)
R129	1-218-652-11	s	RESISTOR,CHIP 22 1/16W (1608)
R130	1-218-652-11	s	RESISTOR,CHIP 22 1/16W (1608)
R131	1-218-652-11	s	RESISTOR,CHIP 22 1/16W (1608)
R132	1-218-652-11	s	RESISTOR,CHIP 22 1/16W (1608)
R133	1-218-652-11	s	RESISTOR,CHIP 22 1/16W (1608)
R135	1-218-652-11	s	RESISTOR,CHIP 22 1/16W (1608)
R140	1-218-660-91	s	RESISTOR,CHIP 47 1/16W (1608)
R143	1-218-740-11	s	RESISTOR,CHIP 100K 1/16W(1608)
R144	1-218-740-11	s	RESISTOR,CHIP 100K 1/16W(1608)
R145	1-218-740-11	s	RESISTOR,CHIP 100K 1/16W(1608)
R146	1-218-708-11	s	RESISTOR,CHIP 4.7K 1/16W(1608)
R147	1-218-708-11	s	RESISTOR,CHIP 4.7K 1/16W(1608)
R150	1-216-864-11	s	CONDUCTOR, CHIP (1608)
R151	1-216-864-11	s	CONDUCTOR, CHIP (1608)
R152	1-218-660-91	s	RESISTOR,CHIP 47 1/16W (1608)
R153	1-218-660-91	s	RESISTOR,CHIP 47 1/16W (1608)
R154	1-216-864-11	s	CONDUCTOR, CHIP (1608)
R155	1-218-660-91	s	RESISTOR,CHIP 47 1/16W (1608)
R156	1-218-660-91	s	RESISTOR,CHIP 47 1/16W (1608)
R157	1-218-660-91	s	RESISTOR,CHIP 47 1/16W (1608)
R158	1-218-660-91	s	RESISTOR,CHIP 47 1/16W (1608)
R159	1-218-660-91	s	RESISTOR,CHIP 47 1/16W (1608)
R160	1-218-660-91	s	RESISTOR,CHIP 47 1/16W (1608)
R161	1-216-864-11	s	CONDUCTOR, CHIP (1608)
R162	1-218-660-91	s	RESISTOR,CHIP 47 1/16W (1608)
R163	1-218-660-91	s	RESISTOR,CHIP 47 1/16W (1608)
R164	1-218-660-91	s	RESISTOR,CHIP 47 1/16W (1608)
R165	1-218-660-91	s	RESISTOR,CHIP 47 1/16W (1608)
R166	1-218-660-91	s	RESISTOR,CHIP 47 1/16W (1608)
R167	1-218-660-91	s	RESISTOR,CHIP 47 1/16W (1608)
R168	1-218-660-91	s	RESISTOR,CHIP 47 1/16W (1608)
R169	1-218-660-91	s	RESISTOR,CHIP 47 1/16W (1608)
R170	1-218-660-91	s	RESISTOR,CHIP 47 1/16W (1608)
R171	1-218-660-91	s	RESISTOR,CHIP 47 1/16W (1608)
R172	1-218-660-91	s	RESISTOR,CHIP 47 1/16W (1608)
R173	1-218-660-91	s	RESISTOR,CHIP 47 1/16W (1608)
R174	1-218-660-91	s	RESISTOR,CHIP 47 1/16W (1608)

(HIF-1 BOARD [SUFFIX 21] for HDW RECORDER)

Ref. No. or Q'ty	Part No.	SP	Description
R175	1-218-660-91	s	RESISTOR,CHIP 47 1/16W (1608)
R176	1-218-660-91	s	RESISTOR,CHIP 47 1/16W (1608)
R177	1-218-660-91	s	RESISTOR,CHIP 47 1/16W (1608)
R223	1-216-864-11	s	CONDUCTOR, CHIP (1608)
R224	1-218-692-11	s	RESISTOR,CHIP 1.0K 1/16W(1608)
R225	1-218-692-11	s	RESISTOR,CHIP 1.0K 1/16W(1608)
R226	1-218-660-91	s	RESISTOR,CHIP 47 1/16W (1608)
R231	1-218-652-11	s	RESISTOR,CHIP 22 1/16W (1608)
R232	1-218-652-11	s	RESISTOR,CHIP 22 1/16W (1608)
R233	1-218-652-11	s	RESISTOR,CHIP 22 1/16W (1608)
R234	1-218-652-11	s	RESISTOR,CHIP 22 1/16W (1608)
R235	1-218-652-11	s	RESISTOR,CHIP 22 1/16W (1608)
R236	1-218-652-11	s	RESISTOR,CHIP 22 1/16W (1608)
R237	1-218-652-11	s	RESISTOR,CHIP 22 1/16W (1608)
R238	1-218-652-11	s	RESISTOR,CHIP 22 1/16W (1608)
R239	1-218-652-11	s	RESISTOR,CHIP 22 1/16W (1608)
R240	1-218-652-11	s	RESISTOR,CHIP 22 1/16W (1608)
R241	1-216-864-11	s	CONDUCTOR, CHIP (1608)
R243	1-218-692-11	s	RESISTOR,CHIP 1.0K 1/16W(1608)
R244	1-218-692-11	s	RESISTOR,CHIP 1.0K 1/16W(1608)
R245	1-218-660-91	s	RESISTOR,CHIP 47 1/16W (1608)
R246	1-218-676-11	s	RESISTOR,CHIP 220 1/16W(1608)
R247	1-218-676-11	s	RESISTOR,CHIP 220 1/16W(1608)
R248	1-218-676-11	s	RESISTOR,CHIP 220 1/16W(1608)
R249	1-218-676-11	s	RESISTOR,CHIP 220 1/16W(1608)
R250	1-218-652-11	s	RESISTOR,CHIP 22 1/16W (1608)
R251	1-218-652-11	s	RESISTOR,CHIP 22 1/16W (1608)
R252	1-218-652-11	s	RESISTOR,CHIP 22 1/16W (1608)
R253	1-218-652-11	s	RESISTOR,CHIP 22 1/16W (1608)
R254	1-218-652-11	s	RESISTOR,CHIP 22 1/16W (1608)
R255	1-218-652-11	s	RESISTOR,CHIP 22 1/16W (1608)
R256	1-218-652-11	s	RESISTOR,CHIP 22 1/16W (1608)
R257	1-218-652-11	s	RESISTOR,CHIP 22 1/16W (1608)
R258	1-218-652-11	s	RESISTOR,CHIP 22 1/16W (1608)
R259	1-218-652-11	s	RESISTOR,CHIP 22 1/16W (1608)
R260	1-218-660-91	s	RESISTOR,CHIP 47 1/16W (1608)
R261	1-218-660-91	s	RESISTOR,CHIP 47 1/16W (1608)
R262	1-218-660-91	s	RESISTOR,CHIP 47 1/16W (1608)
R263	1-218-660-91	s	RESISTOR,CHIP 47 1/16W (1608)
R265	1-216-864-11	s	CONDUCTOR, CHIP (1608)
R266	1-216-864-11	s	CONDUCTOR, CHIP (1608)
R269	1-216-864-11	s	CONDUCTOR, CHIP (1608)
R270	1-216-864-11	s	CONDUCTOR, CHIP (1608)
R272	1-216-864-11	s	CONDUCTOR, CHIP (1608)
R273	1-216-864-11	s	CONDUCTOR, CHIP (1608)
R274	1-218-652-11	s	RESISTOR,CHIP 22 1/16W (1608)
R278	1-218-660-91	s	RESISTOR,CHIP 47 1/16W (1608)
R279	1-218-660-91	s	RESISTOR,CHIP 47 1/16W (1608)
R280	1-216-864-11	s	CONDUCTOR, CHIP (1608)
R281	1-218-708-11	s	RESISTOR,CHIP 4.7K 1/16W(1608)
R282	1-218-708-11	s	RESISTOR,CHIP 4.7K 1/16W(1608)
R283	1-218-708-11	s	RESISTOR,CHIP 4.7K 1/16W(1608)
R284	1-218-708-11	s	RESISTOR,CHIP 4.7K 1/16W(1608)
R285	1-216-864-11	s	CONDUCTOR, CHIP (1608)
R300	1-216-864-11	s	CONDUCTOR, CHIP (1608)
R301	1-218-740-11	s	RESISTOR,CHIP 100K 1/16W(1608)
R302	1-216-864-11	s	CONDUCTOR, CHIP (1608)
R303	1-216-864-11	s	CONDUCTOR, CHIP (1608)
R304	1-216-864-11	s	CONDUCTOR, CHIP (1608)

(HIF-1 BOARD [SUFFIX 21] for HDW RECORDER)

Ref. No. or Q'ty	Part No.	SP	Description
R305	1-218-727-11	s	RESISTOR,CHIP 30K 1/16W(1608)
R306	1-218-692-11	s	RESISTOR,CHIP 1.0K 1/16W(1608)
R401	1-218-660-91	s	RESISTOR,CHIP 47 1/16W (1608)
R402	1-218-660-91	s	RESISTOR,CHIP 47 1/16W (1608)
R403	1-218-660-91	s	RESISTOR,CHIP 47 1/16W (1608)
R404	1-218-660-91	s	RESISTOR,CHIP 47 1/16W (1608)
R405	1-218-660-91	s	RESISTOR,CHIP 47 1/16W (1608)
R406	1-216-864-11	s	CONDUCTOR, CHIP (1608)
R407	1-218-660-91	s	RESISTOR,CHIP 47 1/16W (1608)
R408	1-218-660-91	s	RESISTOR,CHIP 47 1/16W (1608)
R409	1-216-864-11	s	CONDUCTOR, CHIP (1608)
R411	1-216-864-11	s	CONDUCTOR, CHIP (1608)
R412	1-218-660-91	s	RESISTOR,CHIP 47 1/16W (1608)
R413	1-218-660-91	s	RESISTOR,CHIP 47 1/16W (1608)
R414	1-216-864-11	s	CONDUCTOR, CHIP (1608)
R415	1-218-692-11	s	RESISTOR,CHIP 1.0K 1/16W(1608)
R416	1-218-686-11	s	RESISTOR CHIP 560 1/16W (1608)
R417	1-218-660-91	s	RESISTOR,CHIP 47 1/16W (1608)
R418	1-216-864-11	s	CONDUCTOR, CHIP (1608)
R419	1-216-864-11	s	CONDUCTOR, CHIP (1608)
R500	1-216-864-11	s	CONDUCTOR, CHIP (1608)
R501	1-216-864-11	s	CONDUCTOR, CHIP (1608)
R502	1-216-864-11	s	CONDUCTOR, CHIP (1608)
R503	1-216-864-11	s	CONDUCTOR, CHIP (1608)
R504	1-216-864-11	s	CONDUCTOR, CHIP (1608)
R505	1-216-864-11	s	CONDUCTOR, CHIP (1608)
R506	1-216-864-11	s	CONDUCTOR, CHIP (1608)
R507	1-216-864-11	s	CONDUCTOR, CHIP (1608)
R600	1-218-716-11	s	RESISTOR,CHIP 10K 1/16W(1608)
R601	1-218-716-11	s	RESISTOR,CHIP 10K 1/16W(1608)
R602	1-218-716-11	s	RESISTOR,CHIP 10K 1/16W(1608)
R603	1-218-716-11	s	RESISTOR,CHIP 10K 1/16W(1608)
R604	1-218-716-11	s	RESISTOR,CHIP 10K 1/16W(1608)
R605	1-218-716-11	s	RESISTOR,CHIP 10K 1/16W(1608)
R606	1-216-864-11	s	CONDUCTOR, CHIP (1608)
R607	1-218-716-11	s	RESISTOR,CHIP 10K 1/16W(1608)
R608	1-218-716-11	s	RESISTOR,CHIP 10K 1/16W(1608)
R609	1-218-716-11	s	RESISTOR,CHIP 10K 1/16W(1608)
R610	1-218-716-11	s	RESISTOR,CHIP 10K 1/16W(1608)
R611	1-218-716-11	s	RESISTOR,CHIP 10K 1/16W(1608)
R612	1-218-716-11	s	RESISTOR,CHIP 10K 1/16W(1608)
R613	1-218-716-11	s	RESISTOR,CHIP 10K 1/16W(1608)
R614	1-218-716-11	s	RESISTOR,CHIP 10K 1/16W(1608)
R615	1-218-716-11	s	RESISTOR,CHIP 10K 1/16W(1608)
R616	1-218-716-11	s	RESISTOR,CHIP 10K 1/16W(1608)
R622	1-218-716-11	s	RESISTOR,CHIP 10K 1/16W(1608)
R623	1-218-716-11	s	RESISTOR,CHIP 10K 1/16W(1608)
R624	1-218-716-11	s	RESISTOR,CHIP 10K 1/16W(1608)
R625	1-218-716-11	s	RESISTOR,CHIP 10K 1/16W(1608)
R626	1-218-660-91	s	RESISTOR,CHIP 47 1/16W (1608)
R627	1-218-660-91	s	RESISTOR,CHIP 47 1/16W (1608)
R628	1-218-660-91	s	RESISTOR,CHIP 47 1/16W (1608)
R629	1-218-660-91	s	RESISTOR,CHIP 47 1/16W (1608)
R632	1-218-660-91	s	RESISTOR,CHIP 47 1/16W (1608)
R633	1-218-660-91	s	RESISTOR,CHIP 47 1/16W (1608)
R634	1-218-660-91	s	RESISTOR,CHIP 47 1/16W (1608)
R635	1-218-660-91	s	RESISTOR,CHIP 47 1/16W (1608)
R636	1-218-660-91	s	RESISTOR,CHIP 47 1/16W (1608)
R700	1-218-692-11	s	RESISTOR,CHIP 1.0K 1/16W(1608)

(HIF-1 BOARD [SUFFIX 21] for HDW RECORDER)

Ref. No. or Q'ty	Part No.	SP	Description
R701	1-218-692-11	s	RESISTOR,CHIP 1.0K 1/16W(1608)
R702	1-218-677-11	s	RESISTOR,CHIP 240 1/16W (1608)
R703	1-218-701-11	s	RESISTOR,CHIP 2.4K 1/16W(1608)
R704	1-218-692-11	s	RESISTOR,CHIP 1.0K 1/16W(1608)
R705	1-218-668-11	s	RESISTOR,CHIP 100 1/16W (1608)
R706	1-218-668-11	s	RESISTOR,CHIP 100 1/16W (1608)
R707	1-218-668-11	s	RESISTOR,CHIP 100 1/16W (1608)
R708	1-218-668-11	s	RESISTOR,CHIP 100 1/16W (1608)
R709	1-218-700-11	s	RESISTOR,CHIP 2.2K 1/16W(1608)
R710	1-218-710-11	s	RESISTOR,CHIP 5.6K 1/16W(1608)
R711	1-218-716-11	s	RESISTOR,CHIP 10K 1/16W(1608)
R712	1-216-863-11	s	RESISTOR,CHIP 3.3M 1/16W 1608
R713	1-218-692-11	s	RESISTOR,CHIP 1.0K 1/16W(1608)
R714	1-218-668-11	s	RESISTOR,CHIP 100 1/16W (1608)
R715	1-218-704-11	s	RESISTOR,CHIP 3.3K 1/16W(1608)
R716	1-218-660-91	s	RESISTOR,CHIP 47 1/16W (1608)
R717	1-218-660-91	s	RESISTOR,CHIP 47 1/16W (1608)
R718	1-218-660-91	s	RESISTOR,CHIP 47 1/16W (1608)
R719	1-218-660-91	s	RESISTOR,CHIP 47 1/16W (1608)
R720	1-218-668-11	s	RESISTOR,CHIP 100 1/16W (1608)
R721	1-218-668-11	s	RESISTOR,CHIP 100 1/16W (1608)
R722	1-218-708-11	s	RESISTOR,CHIP 4.7K 1/16W(1608)
R723	1-218-703-11	s	RESISTOR,CHIP 3.0K 1/16(1608)
R724	1-218-692-11	s	RESISTOR,CHIP 1.0K 1/16W(1608)
R725	1-218-652-11	s	RESISTOR,CHIP 22 1/16W (1608)
R726	1-218-684-11	s	RESISTOR,CHIP 470 1/16W (1608)
R727	1-218-684-11	s	RESISTOR,CHIP 470 1/16W (1608)
R728	1-218-716-11	s	RESISTOR,CHIP 10K 1/16W(1608)
R729	1-218-660-91	s	RESISTOR,CHIP 47 1/16W (1608)
R730	1-218-708-11	s	RESISTOR,CHIP 4.7K 1/16W(1608)
R731	1-218-708-11	s	RESISTOR,CHIP 4.7K 1/16W(1608)
R732	1-218-708-11	s	RESISTOR,CHIP 4.7K 1/16W(1608)
R734	1-216-864-11	s	CONDUCTOR, CHIP (1608)
R735	1-216-864-11	s	CONDUCTOR, CHIP (1608)
R736	1-216-864-11	s	CONDUCTOR, CHIP (1608)
R737	1-218-708-11	s	RESISTOR,CHIP 4.7K 1/16W(1608)
R738	1-216-864-11	s	CONDUCTOR, CHIP (1608)
R739	1-216-864-11	s	CONDUCTOR, CHIP (1608)
R740	1-216-864-11	s	CONDUCTOR, CHIP (1608)
R741	1-216-864-11	s	CONDUCTOR, CHIP (1608)
R742	1-216-864-11	s	CONDUCTOR, CHIP (1608)
R743	1-216-864-11	s	CONDUCTOR, CHIP (1608)
R744	1-216-864-11	s	CONDUCTOR, CHIP (1608)
R745	1-216-864-11	s	CONDUCTOR, CHIP (1608)
R746	1-216-864-11	s	CONDUCTOR, CHIP (1608)
R747	1-218-702-11	s	RESISTOR CHIP 2.7K 1/16W(1608)
R751	1-218-660-91	s	RESISTOR,CHIP 47 1/16W (1608)
R752	1-218-660-91	s	RESISTOR,CHIP 47 1/16W (1608)
R754	1-218-660-91	s	RESISTOR,CHIP 47 1/16W (1608)
R755	1-218-660-91	s	RESISTOR,CHIP 47 1/16W (1608)
R756	1-218-660-91	s	RESISTOR,CHIP 47 1/16W (1608)
R757	1-218-660-91	s	RESISTOR,CHIP 47 1/16W (1608)
R758	1-218-660-91	s	RESISTOR,CHIP 47 1/16W (1608)
R759	1-218-660-91	s	RESISTOR,CHIP 47 1/16W (1608)
R760	1-218-660-91	s	RESISTOR,CHIP 47 1/16W (1608)
R761	1-218-660-91	s	RESISTOR,CHIP 47 1/16W (1608)
R769	1-218-692-11	s	RESISTOR,CHIP 1.0K 1/16W(1608)
R772	1-218-692-11	s	RESISTOR,CHIP 1.0K 1/16W(1608)
R775	1-218-660-91	s	RESISTOR,CHIP 47 1/16W (1608)

(HIF-1 BOARD [SUFFIX 21] for HDW RECORDER)

Ref. No. or Q'ty	Part No.	SP	Description
R776	1-218-652-11	s	RESISTOR,CHIP 22 1/16W (1608)
R777	1-218-652-11	s	RESISTOR,CHIP 22 1/16W (1608)
R778	1-218-652-11	s	RESISTOR,CHIP 22 1/16W (1608)
R779	1-218-652-11	s	RESISTOR,CHIP 22 1/16W (1608)
R781	1-218-652-11	s	RESISTOR,CHIP 22 1/16W (1608)
R783	1-218-652-11	s	RESISTOR,CHIP 22 1/16W (1608)
R784	1-218-652-11	s	RESISTOR,CHIP 22 1/16W (1608)
R785	1-218-652-11	s	RESISTOR,CHIP 22 1/16W (1608)
R792	1-218-660-91	s	RESISTOR,CHIP 47 1/16W (1608)
R793	1-218-692-11	s	RESISTOR,CHIP 1.0K 1/16W(1608)
R794	1-218-692-11	s	RESISTOR,CHIP 1.0K 1/16W(1608)
R796	1-218-740-11	s	RESISTOR,CHIP 100K 1/16W(1608)
R797	1-218-696-11	s	RESISTOR,CHIP 1.5K 1/16W(1608)
R798	1-218-692-11	s	RESISTOR,CHIP 1.0K 1/16W(1608)
R799	1-218-660-91	s	RESISTOR,CHIP 47 1/16W (1608)
R800	1-218-692-11	s	RESISTOR,CHIP 1.0K 1/16W(1608)
R801	1-218-692-11	s	RESISTOR,CHIP 1.0K 1/16W(1608)
R802	1-216-864-11	s	CONDUCTOR, CHIP (1608)
R803	1-216-864-11	s	CONDUCTOR, CHIP (1608)
R804	1-216-864-11	s	CONDUCTOR, CHIP (1608)
R805	1-218-692-11	s	RESISTOR,CHIP 1.0K 1/16W(1608)
R806	1-218-692-11	s	RESISTOR,CHIP 1.0K 1/16W(1608)
R807	1-218-692-11	s	RESISTOR,CHIP 1.0K 1/16W(1608)
R808	1-218-692-11	s	RESISTOR,CHIP 1.0K 1/16W(1608)
R809	1-218-692-11	s	RESISTOR,CHIP 1.0K 1/16W(1608)
R810	1-218-692-11	s	RESISTOR,CHIP 1.0K 1/16W(1608)
R811	1-218-660-91	s	RESISTOR,CHIP 47 1/16W (1608)
R813	1-218-660-91	s	RESISTOR,CHIP 47 1/16W (1608)
R814	1-218-692-11	s	RESISTOR,CHIP 1.0K 1/16W(1608)
R815	1-218-692-11	s	RESISTOR,CHIP 1.0K 1/16W(1608)
R816	1-218-748-11	s	RESISTOR,CHIP 220K 1/16W(1608)
R818	1-218-740-11	s	RESISTOR,CHIP 100K 1/16W(1608)
R819	1-218-740-11	s	RESISTOR,CHIP 100K 1/16W(1608)
R822	1-218-716-11	s	RESISTOR,CHIP 10K 1/16W(1608)
R823	1-218-716-11	s	RESISTOR,CHIP 10K 1/16W(1608)
R824	1-218-716-11	s	RESISTOR,CHIP 10K 1/16W(1608)
R826	1-218-716-11	s	RESISTOR,CHIP 10K 1/16W(1608)
R827	1-218-716-11	s	RESISTOR,CHIP 10K 1/16W(1608)
R828	1-218-676-11	s	RESISTOR,CHIP 220 1/16W(1608)
R832	1-218-684-11	s	RESISTOR,CHIP 470 1/16W (1608)
R835	1-218-660-91	s	RESISTOR,CHIP 47 1/16W (1608)
R836	1-218-660-91	s	RESISTOR,CHIP 47 1/16W (1608)
R837	1-218-660-91	s	RESISTOR,CHIP 47 1/16W (1608)
R838	1-218-660-91	s	RESISTOR,CHIP 47 1/16W (1608)
R839	1-218-684-11	s	RESISTOR,CHIP 470 1/16W (1608)
R840	1-218-660-91	s	RESISTOR,CHIP 47 1/16W (1608)
R841	1-218-660-91	s	RESISTOR,CHIP 47 1/16W (1608)
R870	1-218-692-11	s	RESISTOR,CHIP 1.0K 1/16W(1608)
R871	1-218-740-11	s	RESISTOR,CHIP 100K 1/16W(1608)
R872	1-218-716-11	s	RESISTOR,CHIP 10K 1/16W(1608)
R873	1-218-716-11	s	RESISTOR,CHIP 10K 1/16W(1608)
R874	1-218-660-91	s	RESISTOR,CHIP 47 1/16W (1608)
R875	1-216-864-11	s	CONDUCTOR, CHIP (1608)
R880	1-218-672-11	s	RESISTOR,CHIP 150 1/16W(1608)
R881	1-218-672-11	s	RESISTOR,CHIP 150 1/16W(1608)
R884	1-218-724-11	s	RESISTOR,CHIP 22K 1/16W(1608)
R885	1-218-672-11	s	RESISTOR,CHIP 150 1/16W(1608)
R886	1-218-672-11	s	RESISTOR,CHIP 150 1/16W(1608)
R887	1-218-700-11	s	RESISTOR,CHIP 2.2K 1/16W(1608)

(HIF-1 BOARD [SUFFIX 21] for HDW RECORDER)

Ref. No. or Q'ty	Part No.	SP	Description
R888	1-218-692-11	s	RESISTOR,CHIP 1.0K 1/16W(1608)
R889	1-218-700-11	s	RESISTOR,CHIP 2.2K 1/16W(1608)
R900	1-218-740-11	s	RESISTOR,CHIP 100K 1/16W(1608)
R901	1-218-668-11	s	RESISTOR,CHIP 100 1/16W (1608)
R902	1-216-864-11	s	CONDUCTOR, CHIP (1608)
R904	1-216-864-11	s	CONDUCTOR, CHIP (1608)
R905	1-216-864-11	s	CONDUCTOR, CHIP (1608)
R906	1-216-864-11	s	CONDUCTOR, CHIP (1608)
R907	1-216-864-11	s	CONDUCTOR, CHIP (1608)
R908	1-218-708-11	s	RESISTOR,CHIP 4.7K 1/16W(1608)
R909	1-218-708-11	s	RESISTOR,CHIP 4.7K 1/16W(1608)
R910	1-218-740-11	s	RESISTOR,CHIP 100K 1/16W(1608)
R911	1-218-740-11	s	RESISTOR,CHIP 100K 1/16W(1608)
R912	1-218-740-11	s	RESISTOR,CHIP 100K 1/16W(1608)
R913	1-218-660-91	s	RESISTOR,CHIP 47 1/16W (1608)
R915	1-218-740-11	s	RESISTOR,CHIP 100K 1/16W(1608)
R916	1-218-740-11	s	RESISTOR,CHIP 100K 1/16W(1608)
R917	1-218-660-91	s	RESISTOR,CHIP 47 1/16W (1608)
R918	1-218-660-91	s	RESISTOR,CHIP 47 1/16W (1608)
R920	1-216-864-11	s	CONDUCTOR, CHIP (1608)
R921	1-216-864-11	s	CONDUCTOR, CHIP (1608)
R926	1-216-864-11	s	CONDUCTOR, CHIP (1608)
R927	1-218-740-11	s	RESISTOR,CHIP 100K 1/16W(1608)
R928	1-218-660-91	s	RESISTOR,CHIP 47 1/16W (1608)
R930	1-218-708-11	s	RESISTOR,CHIP 4.7K 1/16W(1608)
R931	1-218-708-11	s	RESISTOR,CHIP 4.7K 1/16W(1608)
R932	1-218-740-11	s	RESISTOR,CHIP 100K 1/16W(1608)
R933	1-218-740-11	s	RESISTOR,CHIP 100K 1/16W(1608)
R934	1-216-864-11	s	CONDUCTOR, CHIP (1608)
R936	1-218-660-91	s	RESISTOR,CHIP 47 1/16W (1608)
R937	1-218-740-11	s	RESISTOR,CHIP 100K 1/16W(1608)
R938	1-218-740-11	s	RESISTOR,CHIP 100K 1/16W(1608)
R939	1-218-740-11	s	RESISTOR,CHIP 100K 1/16W(1608)
R940	1-216-864-11	s	CONDUCTOR, CHIP (1608)
R942	1-218-660-91	s	RESISTOR,CHIP 47 1/16W (1608)
R943	1-218-660-91	s	RESISTOR,CHIP 47 1/16W (1608)
R944	1-218-740-11	s	RESISTOR,CHIP 100K 1/16W(1608)
R945	1-218-660-91	s	RESISTOR,CHIP 47 1/16W (1608)
R946	1-218-660-91	s	RESISTOR,CHIP 47 1/16W (1608)
R947	1-218-660-91	s	RESISTOR,CHIP 47 1/16W (1608)
R948	1-218-660-91	s	RESISTOR,CHIP 47 1/16W (1608)
R949	1-218-660-91	s	RESISTOR,CHIP 47 1/16W (1608)
R950	1-218-660-91	s	RESISTOR,CHIP 47 1/16W (1608)
R951	1-218-660-91	s	RESISTOR,CHIP 47 1/16W (1608)
R952	1-218-660-91	s	RESISTOR,CHIP 47 1/16W (1608)
R953	1-218-668-11	s	RESISTOR,CHIP 100 1/16W (1608)
R954	1-218-668-11	s	RESISTOR,CHIP 100 1/16W (1608)
R1000	1-219-989-11	s	RESISTOR, SQUARE CHIP 0.02 1W
R1003	1-218-644-11	s	RESISTOR,CHIP 10 1/16W
R1004	1-218-644-11	s	RESISTOR,CHIP 10 1/16W
R1005	1-218-725-11	s	RESISTOR,CHIP 24K 1/16W(1608)
R1006	1-218-722-11	s	RESISTOR, CHIP 18K 1/16W 1608
R1009	1-218-708-11	s	RESISTOR,CHIP 4.7K 1/16W(1608)
R1011	1-216-864-11	s	CONDUCTOR, CHIP (1608)
R1016	1-218-668-11	s	RESISTOR,CHIP 100 1/16W (1608)
R1021	1-218-708-11	s	RESISTOR,CHIP 4.7K 1/16W(1608)
R1022	1-218-715-11	s	RESISTOR,METAL 9.1K 1/16W
R1023	1-218-716-11	s	RESISTOR,CHIP 10K 1/16W(1608)
R1026	1-218-644-11	s	RESISTOR,CHIP 10 1/16W

(HIF-1 BOARD [SUFFIX 21] for HDW RECORDER)

Ref. No. or Q'ty	Part No.	SP	Description
R1027	1-218-644-11	s	RESISTOR,CHIP 10 1/16W
R1028	1-219-989-11	s	RESISTOR, SQUARE CHIP 0.02 1W
R1030	1-216-864-11	s	CONDUCTOR, CHIP (1608)
R1032	1-216-864-11	s	CONDUCTOR, CHIP (1608)
RB50	1-236-904-11	s	RESISTOR NETWORK 1K (1608)
RB51	1-236-904-11	s	RESISTOR NETWORK 1K (1608)
RB52	1-239-409-11	s	RESISTOR NETWORK 47 (1608)
RB53	1-239-409-11	s	RESISTOR NETWORK 47 (1608)
RB100	1-233-936-11	s	RESISTOR,NETWORK 10 (1608)
RB101	1-233-936-11	s	RESISTOR,NETWORK 10 (1608)
RB102	1-233-936-11	s	RESISTOR,NETWORK 10 (1608)
RB103	1-233-936-11	s	RESISTOR,NETWORK 10 (1608)
RB104	1-233-936-11	s	RESISTOR,NETWORK 10 (1608)
RB105	1-233-936-11	s	RESISTOR,NETWORK 10 (1608)
RB106	1-233-936-11	s	RESISTOR,NETWORK 10 (1608)
RB107	1-239-409-11	s	RESISTOR NETWORK 47 (1608)
RB108	1-239-409-11	s	RESISTOR NETWORK 47 (1608)
RB109	1-239-409-11	s	RESISTOR NETWORK 47 (1608)
RB110	1-239-409-11	s	RESISTOR NETWORK 47 (1608)
RB111	1-239-409-11	s	RESISTOR NETWORK 47 (1608)
RB112	1-239-409-11	s	RESISTOR NETWORK 47 (1608)
RB113	1-239-409-11	s	RESISTOR NETWORK 47 (1608)
RB114	1-233-936-11	s	RESISTOR,NETWORK 10 (1608)
RB115	1-233-936-11	s	RESISTOR,NETWORK 10 (1608)
RB116	1-233-936-11	s	RESISTOR,NETWORK 10 (1608)
RB117	1-233-936-11	s	RESISTOR,NETWORK 10 (1608)
RB118	1-233-936-11	s	RESISTOR,NETWORK 10 (1608)
RB119	1-233-936-11	s	RESISTOR,NETWORK 10 (1608)
RB120	1-233-936-11	s	RESISTOR,NETWORK 10 (1608)
RB121	1-239-409-11	s	RESISTOR NETWORK 47 (1608)
RB122	1-239-409-11	s	RESISTOR NETWORK 47 (1608)
RB123	1-239-409-11	s	RESISTOR NETWORK 47 (1608)
RB124	1-239-409-11	s	RESISTOR NETWORK 47 (1608)
RB125	1-239-409-11	s	RESISTOR NETWORK 47 (1608)
RB126	1-239-409-11	s	RESISTOR NETWORK 47 (1608)
RB127	1-239-409-11	s	RESISTOR NETWORK 47 (1608)
RB132	1-239-409-11	s	RESISTOR NETWORK 47 (1608)
RB133	1-239-409-11	s	RESISTOR NETWORK 47 (1608)
RB134	1-239-409-11	s	RESISTOR NETWORK 47 (1608)
RB135	1-239-409-11	s	RESISTOR NETWORK 47 (1608)
RB136	1-239-409-11	s	RESISTOR NETWORK 47 (1608)
RB200	1-239-409-11	s	RESISTOR NETWORK 47 (1608)
RB201	1-239-409-11	s	RESISTOR NETWORK 47 (1608)
RB202	1-239-409-11	s	RESISTOR NETWORK 47 (1608)
RB203	1-239-409-11	s	RESISTOR NETWORK 47 (1608)
RB204	1-239-409-11	s	RESISTOR NETWORK 47 (1608)
RB205	1-239-409-11	s	RESISTOR NETWORK 47 (1608)
RB206	1-239-409-11	s	RESISTOR NETWORK 47 (1608)
RB207	1-239-416-11	s	NETWORK,RESISTOR 220 (1608)
RB208	1-239-416-11	s	NETWORK,RESISTOR 220 (1608)
RB209	1-239-416-11	s	NETWORK,RESISTOR 220 (1608)
RB210	1-239-416-11	s	NETWORK,RESISTOR 220 (1608)
RB211	1-239-416-11	s	NETWORK,RESISTOR 220 (1608)
RB212	1-239-416-11	s	NETWORK,RESISTOR 220 (1608)
RB213	1-239-409-11	s	RESISTOR NETWORK 47 (1608)
RB214	1-239-409-11	s	RESISTOR NETWORK 47 (1608)
RB215	1-239-409-11	s	RESISTOR NETWORK 47 (1608)
RB216	1-239-409-11	s	RESISTOR NETWORK 47 (1608)
RB217	1-239-409-11	s	RESISTOR NETWORK 47 (1608)

(HIF-1 BOARD [SUFFIX 21] for HDW RECORDER)

Ref. No. or Q'ty	Part No.	SP	Description
RB218	1-239-409-11	s	RESISTOR NETWORK 47 (1608)
RB219	1-239-409-11	s	RESISTOR NETWORK 47 (1608)
RB220	1-239-409-11	s	RESISTOR NETWORK 47 (1608)
RB221	1-239-409-11	s	RESISTOR NETWORK 47 (1608)
RB222	1-239-409-11	s	RESISTOR NETWORK 47 (1608)
RB223	1-239-409-11	s	RESISTOR NETWORK 47 (1608)
RB224	1-239-409-11	s	RESISTOR NETWORK 47 (1608)
RB225	1-239-409-11	s	RESISTOR NETWORK 47 (1608)
RB400	1-239-409-11	s	RESISTOR NETWORK 47 (1608)
RB401	1-239-409-11	s	RESISTOR NETWORK 47 (1608)
RB402	1-239-409-11	s	RESISTOR NETWORK 47 (1608)
RB403	1-239-409-11	s	RESISTOR NETWORK 47 (1608)
RB404	1-239-409-11	s	RESISTOR NETWORK 47 (1608)
RB405	1-239-409-11	s	RESISTOR NETWORK 47 (1608)
RB406	1-239-409-11	s	RESISTOR NETWORK 47 (1608)
RB407	1-239-409-11	s	RESISTOR NETWORK 47 (1608)
RB408	1-239-409-11	s	RESISTOR NETWORK 47 (1608)
RB409	1-239-409-11	s	RESISTOR NETWORK 47 (1608)
RB410	1-239-409-11	s	RESISTOR NETWORK 47 (1608)
RB411	1-239-409-11	s	RESISTOR NETWORK 47 (1608)
RB412	1-239-409-11	s	RESISTOR NETWORK 47 (1608)
RB413	1-239-409-11	s	RESISTOR NETWORK 47 (1608)
RB414	1-239-409-11	s	RESISTOR NETWORK 47 (1608)
RB415	1-239-409-11	s	RESISTOR NETWORK 47 (1608)
RB416	1-239-409-11	s	RESISTOR NETWORK 47 (1608)
RB417	1-239-409-11	s	RESISTOR NETWORK 47 (1608)
RB418	1-239-409-11	s	RESISTOR NETWORK 47 (1608)
RB419	1-239-409-11	s	RESISTOR NETWORK 47 (1608)
RB420	1-239-409-11	s	RESISTOR NETWORK 47 (1608)
RB500	1-233-936-11	s	RESISTOR,NETWORK 10 (1608)
RB501	1-233-936-11	s	RESISTOR,NETWORK 10 (1608)
RB502	1-233-936-11	s	RESISTOR,NETWORK 10 (1608)
RB503	1-233-936-11	s	RESISTOR,NETWORK 10 (1608)
RB504	1-233-936-11	s	RESISTOR,NETWORK 10 (1608)
RB505	1-233-936-11	s	RESISTOR,NETWORK 10 (1608)
RB506	1-233-936-11	s	RESISTOR,NETWORK 10 (1608)
RB507	1-233-936-11	s	RESISTOR,NETWORK 10 (1608)
RB508	1-233-936-11	s	RESISTOR,NETWORK 10 (1608)
RB509	1-233-936-11	s	RESISTOR,NETWORK 10 (1608)
RB510	1-233-936-11	s	RESISTOR,NETWORK 10 (1608)
RB511	1-233-936-11	s	RESISTOR,NETWORK 10 (1608)
RB600	1-239-409-11	s	RESISTOR NETWORK 47 (1608)
RB601	1-239-409-11	s	RESISTOR NETWORK 47 (1608)
RB602	1-239-409-11	s	RESISTOR NETWORK 47 (1608)
RB603	1-239-409-11	s	RESISTOR NETWORK 47 (1608)
RB606	1-239-621-11	s	NETWORK RESISTOR 22 (1608)
RB607	1-239-621-11	s	NETWORK RESISTOR 22 (1608)
RB608	1-239-621-11	s	NETWORK RESISTOR 22 (1608)
RB609	1-239-621-11	s	NETWORK RESISTOR 22 (1608)
RB610	1-239-621-11	s	NETWORK RESISTOR 22 (1608)
RB611	1-239-621-11	s	NETWORK RESISTOR 22 (1608)
RB700	1-239-409-11	s	RESISTOR NETWORK 47 (1608)
RB701	1-239-409-11	s	RESISTOR NETWORK 47 (1608)
RB702	1-239-621-11	s	NETWORK RESISTOR 22 (1608)
RB703	1-239-621-11	s	NETWORK RESISTOR 22 (1608)
RB704	1-239-621-11	s	NETWORK RESISTOR 22 (1608)
RB705	1-239-621-11	s	NETWORK RESISTOR 22 (1608)
RB706	1-239-621-11	s	NETWORK RESISTOR 22 (1608)
RB707	1-239-621-11	s	NETWORK RESISTOR 22 (1608)

(HIF-1 BOARD [SUFFIX 21] for HDW RECORDER)

Ref. No. or Q'ty	Part No.	SP	Description
RB708	1-239-621-11	s	NETWORK RESISTOR 22 (1608)
RB709	1-239-621-11	s	NETWORK RESISTOR 22 (1608)
RB900	1-236-907-11	s	RESISTOR BLOCK 100K (1608)
RB901	1-236-907-11	s	RESISTOR BLOCK 100K (1608)
RB902	1-236-907-11	s	RESISTOR BLOCK 100K (1608)
RB903	1-236-907-11	s	RESISTOR BLOCK 100K (1608)
RB904	1-236-907-11	s	RESISTOR BLOCK 100K (1608)
RB905	1-236-907-11	s	RESISTOR BLOCK 100K (1608)
RB906	1-236-907-11	s	RESISTOR BLOCK 100K (1608)
RB908	1-239-409-11	s	RESISTOR NETWORK 47 (1608)
RB909	1-239-409-11	s	RESISTOR NETWORK 47 (1608)
RB910	1-239-409-11	s	RESISTOR NETWORK 47 (1608)
RB911	1-239-409-11	s	RESISTOR NETWORK 47 (1608)
RB912	1-239-409-11	s	RESISTOR NETWORK 47 (1608)
RB913	1-239-409-11	s	RESISTOR NETWORK 47 (1608)
RB914	1-239-409-11	s	RESISTOR NETWORK 47 (1608)
RB918	1-239-430-11	s	NETWORK RESISTOR 4.7K (1608)
RB919	1-239-430-11	s	NETWORK RESISTOR 4.7K (1608)
RB920	1-239-430-11	s	NETWORK RESISTOR 4.7K (1608)
RB921	1-239-430-11	s	NETWORK RESISTOR 4.7K (1608)
RB922	1-236-907-11	s	RESISTOR BLOCK 100K (1608)
RB923	1-236-907-11	s	RESISTOR BLOCK 100K (1608)
RB924	1-236-907-11	s	RESISTOR BLOCK 100K (1608)
RB925	1-239-430-11	s	NETWORK RESISTOR 4.7K (1608)
RB926	1-239-430-11	s	NETWORK RESISTOR 4.7K (1608)
RB927	1-239-409-11	s	RESISTOR NETWORK 47 (1608)
RB928	1-239-409-11	s	RESISTOR NETWORK 47 (1608)
RB929	1-239-409-11	s	RESISTOR NETWORK 47 (1608)
RB930	1-239-409-11	s	RESISTOR NETWORK 47 (1608)
RB931	1-236-907-11	s	RESISTOR BLOCK 100K (1608)
RB932	1-239-409-11	s	RESISTOR NETWORK 47 (1608)
RB933	1-239-409-11	s	RESISTOR NETWORK 47 (1608)
RB934	1-239-409-11	s	RESISTOR NETWORK 47 (1608)
RB935	1-236-907-11	s	RESISTOR BLOCK 100K (1608)
RB1000	1-236-904-11	s	RESISTOR NETWORK 1K (1608)
RB1001	1-236-904-11	s	RESISTOR NETWORK 1K (1608)
RB1002	1-239-409-11	s	RESISTOR NETWORK 47 (1608)
RB1004	1-239-409-11	s	RESISTOR NETWORK 47 (1608)
RB1005	1-239-409-11	s	RESISTOR NETWORK 47 (1608)
RB1006	1-239-621-11	s	NETWORK RESISTOR 22 (1608)
RB1007	1-239-621-11	s	NETWORK RESISTOR 22 (1608)
RB1008	1-239-621-11	s	NETWORK RESISTOR 22 (1608)
RB1009	1-239-409-11	s	RESISTOR NETWORK 47 (1608)
RB1010	1-239-409-11	s	RESISTOR NETWORK 47 (1608)
RV800	1-237-033-11	s	RESISTOR,ADJ,CERMET 1K
RV801	1-237-033-11	s	RESISTOR,ADJ,CERMET 1K
S50	1-692-881-41	s	SWITCH, SLIDE
S900	1-692-270-41	s	SWITCH, SLIDE
X801	1-767-694-11	s	OSCILLATOR, CRYSTAL
X802	1-781-496-11	s	OSCILLATOR, CRYSTAL
X803	1-781-830-11	s	OSCILLATOR, CRYSTAL
X804	1-781-831-11	s	OSCILLATOR, CRYSTAL
X805	1-781-671-11	s	OSCILLATOR, CRYSTAL
X870	1-781-672-11	s	OSCILLATOR, CRYSTAL

HIF-1 BOARD [SUFFIX 22, 23] for HDW RECORDER

[Lot No. 2B3-3B4] HDW-2000, M2000/P

*1: [SUFFIX 22]
*2: [SUFFIX 23]

Ref. No. or Q'ty	Part No.	SP	Description
1pc	A-8327-055-C	s	MOUNTED CIRCUIT BOARD, HIF-1
1pc	3-629-706-03	o	COVER,SHIELD HIF
1pc	3-701-822-00	s	HOLDER, WIRE
2pcs	7-621-772-18	s	SCREW +B M2X4
6pcs	7-682-902-11	s	SCREW +PWH 2.6X5
1pc	3-179-084-21	s	LEVER (R), PC BOARD
1pc	3-179-085-21	s	LEVER (L), PC BOARD
1pc	3-629-707-02	o	CASE,SHIELD HIF
C54	1-107-826-11	s	CAPACITOR,CHIP CERAMIC 0.1MF
C55	1-107-826-11	s	CAPACITOR,CHIP CERAMIC 0.1MF
C57	1-107-826-11	s	CAPACITOR,CHIP CERAMIC 0.1MF
C59	1-107-826-11	s	CAPACITOR,CHIP CERAMIC 0.1MF
C60	1-107-826-11	s	CAPACITOR,CHIP CERAMIC 0.1MF
C61	1-107-826-11	s	CAPACITOR,CHIP CERAMIC 0.1MF
C62	1-107-826-11	s	CAPACITOR,CHIP CERAMIC 0.1MF
C63	1-107-826-11	s	CAPACITOR,CHIP CERAMIC 0.1MF
C64	1-107-826-11	s	CAPACITOR,CHIP CERAMIC 0.1MF
C65	1-107-826-11	s	CAPACITOR,CHIP CERAMIC 0.1MF
C66	1-107-826-11	s	CAPACITOR,CHIP CERAMIC 0.1MF
C67	1-107-826-11	s	CAPACITOR,CHIP CERAMIC 0.1MF
C68	1-107-826-11	s	CAPACITOR,CHIP CERAMIC 0.1MF
C100	1-107-826-11	s	CAPACITOR,CHIP CERAMIC 0.1MF
C101	1-107-826-11	s	CAPACITOR,CHIP CERAMIC 0.1MF
C102	1-107-826-11	s	CAPACITOR,CHIP CERAMIC 0.1MF
C103	1-107-826-11	s	CAPACITOR,CHIP CERAMIC 0.1MF
C104	1-107-826-11	s	CAPACITOR,CHIP CERAMIC 0.1MF
C105	1-107-826-11	s	CAPACITOR,CHIP CERAMIC 0.1MF
C106	1-107-826-11	s	CAPACITOR,CHIP CERAMIC 0.1MF
C107	1-107-826-11	s	CAPACITOR,CHIP CERAMIC 0.1MF
C108	1-107-826-11	s	CAPACITOR,CHIP CERAMIC 0.1MF
C109	1-107-826-11	s	CAPACITOR,CHIP CERAMIC 0.1MF
C110	1-107-826-11	s	CAPACITOR,CHIP CERAMIC 0.1MF
C111	1-107-826-11	s	CAPACITOR,CHIP CERAMIC 0.1MF
C112	1-107-826-11	s	CAPACITOR,CHIP CERAMIC 0.1MF
C113	1-107-826-11	s	CAPACITOR,CHIP CERAMIC 0.1MF
C114	1-107-826-11	s	CAPACITOR,CHIP CERAMIC 0.1MF
C200	1-107-826-11	s	CAPACITOR,CHIP CERAMIC 0.1MF
C201	1-107-826-11	s	CAPACITOR,CHIP CERAMIC 0.1MF
C202	1-107-826-11	s	CAPACITOR,CHIP CERAMIC 0.1MF
C203	1-107-826-11	s	CAPACITOR,CHIP CERAMIC 0.1MF
C204	1-107-826-11	s	CAPACITOR,CHIP CERAMIC 0.1MF
C205	1-107-826-11	s	CAPACITOR,CHIP CERAMIC 0.1MF
C206	1-127-692-11	s	CAP, CHIP CERAMIC 10MF B 3216
C207	1-107-826-11	s	CAPACITOR,CHIP CERAMIC 0.1MF
C208	1-107-826-11	s	CAPACITOR,CHIP CERAMIC 0.1MF
C209	1-107-826-11	s	CAPACITOR,CHIP CERAMIC 0.1MF
C210	1-107-826-11	s	CAPACITOR,CHIP CERAMIC 0.1MF
C211	1-127-692-11	s	CAP, CHIP CERAMIC 10MF B 3216
C212	1-107-826-11	s	CAPACITOR,CHIP CERAMIC 0.1MF
C213	1-107-826-11	s	CAPACITOR,CHIP CERAMIC 0.1MF
C214	1-107-826-11	s	CAPACITOR,CHIP CERAMIC 0.1MF
C215	1-107-826-11	s	CAPACITOR,CHIP CERAMIC 0.1MF
C216	1-107-826-11	s	CAPACITOR,CHIP CERAMIC 0.1MF
C217	1-107-826-11	s	CAPACITOR,CHIP CERAMIC 0.1MF
C218	1-107-826-11	s	CAPACITOR,CHIP CERAMIC 0.1MF

(HIF-1 BOARD [SUFFIX 22, 23] for HDW RECORDER)

Ref. No. or Q'ty	Part No.	SP	Description
C219	1-107-826-11	s	CAPACITOR,CHIP CERAMIC 0.1MF
C220	1-107-826-11	s	CAPACITOR,CHIP CERAMIC 0.1MF
C221	1-107-826-11	s	CAPACITOR,CHIP CERAMIC 0.1MF
C222	1-107-826-11	s	CAPACITOR,CHIP CERAMIC 0.1MF
C223	1-107-826-11	s	CAPACITOR,CHIP CERAMIC 0.1MF
C226	1-127-692-11	s	CAP, CHIP CERAMIC 10MF B 3216
C227	1-125-889-11	s	CAPACITOR, C.CERAMIC 2.2MF
C228	1-125-889-11	s	CAPACITOR, C.CERAMIC 2.2MF
C229	1-107-826-11	s	CAPACITOR,CHIP CERAMIC 0.1MF
C300	1-107-826-11	s	CAPACITOR,CHIP CERAMIC 0.1MF
C301	1-107-826-11	s	CAPACITOR,CHIP CERAMIC 0.1MF
C302	1-107-826-11	s	CAPACITOR,CHIP CERAMIC 0.1MF
C303	1-107-826-11	s	CAPACITOR,CHIP CERAMIC 0.1MF
C304	1-107-826-11	s	CAPACITOR,CHIP CERAMIC 0.1MF
C305	1-107-826-11	s	CAPACITOR,CHIP CERAMIC 0.1MF
C306	1-107-826-11	s	CAPACITOR,CHIP CERAMIC 0.1MF
C307	1-107-826-11	s	CAPACITOR,CHIP CERAMIC 0.1MF
C308	1-107-826-11	s	CAPACITOR,CHIP CERAMIC 0.1MF
C309	1-107-826-11	s	CAPACITOR,CHIP CERAMIC 0.1MF
C310	1-107-826-11	s	CAPACITOR,CHIP CERAMIC 0.1MF
C311	1-107-826-11	s	CAPACITOR,CHIP CERAMIC 0.1MF
C312	1-107-826-11	s	CAPACITOR,CHIP CERAMIC 0.1MF
C313	1-107-826-11	s	CAPACITOR,CHIP CERAMIC 0.1MF
C314	1-107-826-11	s	CAPACITOR,CHIP CERAMIC 0.1MF
C315	1-107-826-11	s	CAPACITOR,CHIP CERAMIC 0.1MF
C316	1-107-826-11	s	CAPACITOR,CHIP CERAMIC 0.1MF
C317	1-107-826-11	s	CAPACITOR,CHIP CERAMIC 0.1MF
C318	1-107-826-11	s	CAPACITOR,CHIP CERAMIC 0.1MF
C319	1-107-826-11	s	CAPACITOR,CHIP CERAMIC 0.1MF
C320	1-107-826-11	s	CAPACITOR,CHIP CERAMIC 0.1MF
C321	1-107-826-11	s	CAPACITOR,CHIP CERAMIC 0.1MF
C322	1-107-826-11	s	CAPACITOR,CHIP CERAMIC 0.1MF
C323	1-107-826-11	s	CAPACITOR,CHIP CERAMIC 0.1MF
C324	1-107-826-11	s	CAPACITOR,CHIP CERAMIC 0.1MF
C325	1-107-826-11	s	CAPACITOR,CHIP CERAMIC 0.1MF
C326	1-107-826-11	s	CAPACITOR,CHIP CERAMIC 0.1MF
C327	1-107-826-11	s	CAPACITOR,CHIP CERAMIC 0.1MF
C328	1-107-826-11	s	CAPACITOR,CHIP CERAMIC 0.1MF
C329	1-127-708-11	s	CAP, POLYPYRROLE 100MF
C330	1-127-708-11	s	CAP, POLYPYRROLE 100MF
C331	1-107-826-11	s	CAPACITOR,CHIP CERAMIC 0.1MF
C332	1-107-826-11	s	CAPACITOR,CHIP CERAMIC 0.1MF
C333	1-107-826-11	s	CAPACITOR,CHIP CERAMIC 0.1MF
C334	1-107-826-11	s	CAPACITOR,CHIP CERAMIC 0.1MF
C335	1-107-826-11	s	CAPACITOR,CHIP CERAMIC 0.1MF
C336	1-107-826-11	s	CAPACITOR,CHIP CERAMIC 0.1MF
C337	1-107-826-11	s	CAPACITOR,CHIP CERAMIC 0.1MF
C338	1-107-826-11	s	CAPACITOR,CHIP CERAMIC 0.1MF
C339	1-107-826-11	s	CAPACITOR,CHIP CERAMIC 0.1MF
C340	1-107-826-11	s	CAPACITOR,CHIP CERAMIC 0.1MF
C341	1-107-826-11	s	CAPACITOR,CHIP CERAMIC 0.1MF
C342	1-107-826-11	s	CAPACITOR,CHIP CERAMIC 0.1MF
C343	1-107-826-11	s	CAPACITOR,CHIP CERAMIC 0.1MF
C344	1-107-826-11	s	CAPACITOR,CHIP CERAMIC 0.1MF
C345	1-107-826-11	s	CAPACITOR,CHIP CERAMIC 0.1MF
C346	1-107-826-11	s	CAPACITOR,CHIP CERAMIC 0.1MF
C347	1-107-826-11	s	CAPACITOR,CHIP CERAMIC 0.1MF
C348	1-164-227-11	s	CAPACITOR,CERAMIC 0.022MF/25V
C400	1-107-826-11	s	CAPACITOR,CHIP CERAMIC 0.1MF

(HIF-1 BOARD [SUFFIX 22, 23] for HDW RECORDER)

Ref. No. or Q'ty	Part No.	SP	Description
C401	1-107-826-11	s	CAPACITOR,CHIP CERAMIC 0.1MF
C402	1-107-826-11	s	CAPACITOR,CHIP CERAMIC 0.1MF
C403	1-107-826-11	s	CAPACITOR,CHIP CERAMIC 0.1MF
C404	1-107-826-11	s	CAPACITOR,CHIP CERAMIC 0.1MF
C405	1-107-826-11	s	CAPACITOR,CHIP CERAMIC 0.1MF
C406	1-107-826-11	s	CAPACITOR,CHIP CERAMIC 0.1MF
C407	1-107-826-11	s	CAPACITOR,CHIP CERAMIC 0.1MF
C408	1-107-826-11	s	CAPACITOR,CHIP CERAMIC 0.1MF
C409	1-107-826-11	s	CAPACITOR,CHIP CERAMIC 0.1MF
C410	1-107-826-11	s	CAPACITOR,CHIP CERAMIC 0.1MF
C411	1-107-826-11	s	CAPACITOR,CHIP CERAMIC 0.1MF
C412	1-107-826-11	s	CAPACITOR,CHIP CERAMIC 0.1MF
C413	1-107-826-11	s	CAPACITOR,CHIP CERAMIC 0.1MF
C414	1-107-826-11	s	CAPACITOR,CHIP CERAMIC 0.1MF
C415	1-107-826-11	s	CAPACITOR,CHIP CERAMIC 0.1MF
C416	1-107-826-11	s	CAPACITOR,CHIP CERAMIC 0.1MF
C417	1-107-826-11	s	CAPACITOR,CHIP CERAMIC 0.1MF
C418	1-107-826-11	s	CAPACITOR,CHIP CERAMIC 0.1MF
C419	1-107-826-11	s	CAPACITOR,CHIP CERAMIC 0.1MF
C420	1-107-826-11	s	CAPACITOR,CHIP CERAMIC 0.1MF
C421	1-107-826-11	s	CAPACITOR,CHIP CERAMIC 0.1MF
C422	1-107-826-11	s	CAPACITOR,CHIP CERAMIC 0.1MF
C423	1-107-826-11	s	CAPACITOR,CHIP CERAMIC 0.1MF
C424	1-107-826-11	s	CAPACITOR,CHIP CERAMIC 0.1MF
C425	1-107-826-11	s	CAPACITOR,CHIP CERAMIC 0.1MF
C426	1-107-826-11	s	CAPACITOR,CHIP CERAMIC 0.1MF
C427	1-107-826-11	s	CAPACITOR,CHIP CERAMIC 0.1MF
C428	1-107-826-11	s	CAPACITOR,CHIP CERAMIC 0.1MF
C429	1-107-826-11	s	CAPACITOR,CHIP CERAMIC 0.1MF
C430	1-107-826-11	s	CAPACITOR,CHIP CERAMIC 0.1MF
C431	1-107-826-11	s	CAPACITOR,CHIP CERAMIC 0.1MF
C432	1-107-826-11	s	CAPACITOR,CHIP CERAMIC 0.1MF
C433	1-107-826-11	s	CAPACITOR,CHIP CERAMIC 0.1MF
C434	1-107-826-11	s	CAPACITOR,CHIP CERAMIC 0.1MF
C435	1-107-826-11	s	CAPACITOR,CHIP CERAMIC 0.1MF
C436	1-107-826-11	s	CAPACITOR,CHIP CERAMIC 0.1MF
C437	1-107-826-11	s	CAPACITOR,CHIP CERAMIC 0.1MF
C438	1-107-826-11	s	CAPACITOR,CHIP CERAMIC 0.1MF
C439	1-107-826-11	s	CAPACITOR,CHIP CERAMIC 0.1MF
C440	1-127-692-11	s	CAP, CHIP CERAMIC 10MF B 3216
C441	1-127-692-11	s	CAP, CHIP CERAMIC 10MF B 3216
C442	1-107-826-11	s	CAPACITOR,CHIP CERAMIC 0.1MF
C443	1-107-826-11	s	CAPACITOR,CHIP CERAMIC 0.1MF
C444	1-107-826-11	s	CAPACITOR,CHIP CERAMIC 0.1MF
C445	1-107-826-11	s	CAPACITOR,CHIP CERAMIC 0.1MF
C446	1-107-826-11	s	CAPACITOR,CHIP CERAMIC 0.1MF
C447	1-107-826-11	s	CAPACITOR,CHIP CERAMIC 0.1MF
C448	1-107-826-11	s	CAPACITOR,CHIP CERAMIC 0.1MF
C449	1-107-826-11	s	CAPACITOR,CHIP CERAMIC 0.1MF
C450	1-127-692-11	s	CAP, CHIP CERAMIC 10MF B 3216
C451	1-127-692-11	s	CAP, CHIP CERAMIC 10MF B 3216
C452	1-107-826-11	s	CAPACITOR,CHIP CERAMIC 0.1MF
C453	1-107-826-11	s	CAPACITOR,CHIP CERAMIC 0.1MF
C454	1-107-826-11	s	CAPACITOR,CHIP CERAMIC 0.1MF
C455	1-107-826-11	s	CAPACITOR,CHIP CERAMIC 0.1MF
C456	1-107-826-11	s	CAPACITOR,CHIP CERAMIC 0.1MF
C457	1-107-826-11	s	CAPACITOR,CHIP CERAMIC 0.1MF
C500	1-107-826-11	s	CAPACITOR,CHIP CERAMIC 0.1MF
C501	1-107-826-11	s	CAPACITOR,CHIP CERAMIC 0.1MF

(HIF-1 BOARD [SUFFIX 22, 23] for HDW RECORDER)

Ref. No. or Q'ty	Part No.	SP	Description
C502	1-107-826-11	s	CAPACITOR,CHIP CERAMIC 0.1MF
C503	1-107-826-11	s	CAPACITOR,CHIP CERAMIC 0.1MF
C504	1-107-826-11	s	CAPACITOR,CHIP CERAMIC 0.1MF
C505	1-107-826-11	s	CAPACITOR,CHIP CERAMIC 0.1MF
C506	1-107-826-11	s	CAPACITOR,CHIP CERAMIC 0.1MF
C507	1-107-826-11	s	CAPACITOR,CHIP CERAMIC 0.1MF
C508	1-107-826-11	s	CAPACITOR,CHIP CERAMIC 0.1MF
C509	1-107-826-11	s	CAPACITOR,CHIP CERAMIC 0.1MF
C510	1-107-826-11	s	CAPACITOR,CHIP CERAMIC 0.1MF
C511	1-107-826-11	s	CAPACITOR,CHIP CERAMIC 0.1MF
C512	1-107-826-11	s	CAPACITOR,CHIP CERAMIC 0.1MF
C513	1-107-826-11	s	CAPACITOR,CHIP CERAMIC 0.1MF
C514	1-107-826-11	s	CAPACITOR,CHIP CERAMIC 0.1MF
C515	1-107-826-11	s	CAPACITOR,CHIP CERAMIC 0.1MF
C516	1-107-826-11	s	CAPACITOR,CHIP CERAMIC 0.1MF
C517	1-107-826-11	s	CAPACITOR,CHIP CERAMIC 0.1MF
C518	1-107-826-11	s	CAPACITOR,CHIP CERAMIC 0.1MF
C519	1-107-826-11	s	CAPACITOR,CHIP CERAMIC 0.1MF
C520	1-107-826-11	s	CAPACITOR,CHIP CERAMIC 0.1MF
C521	1-107-826-11	s	CAPACITOR,CHIP CERAMIC 0.1MF
C522	1-107-826-11	s	CAPACITOR,CHIP CERAMIC 0.1MF
C523	1-107-826-11	s	CAPACITOR,CHIP CERAMIC 0.1MF
C524	1-107-826-11	s	CAPACITOR,CHIP CERAMIC 0.1MF
C525	1-107-826-11	s	CAPACITOR,CHIP CERAMIC 0.1MF
C526	1-107-826-11	s	CAPACITOR,CHIP CERAMIC 0.1MF
C527	1-107-826-11	s	CAPACITOR,CHIP CERAMIC 0.1MF
C528	1-107-826-11	s	CAPACITOR,CHIP CERAMIC 0.1MF
C529	1-107-826-11	s	CAPACITOR,CHIP CERAMIC 0.1MF
C530	1-107-826-11	s	CAPACITOR,CHIP CERAMIC 0.1MF
C531	1-107-826-11	s	CAPACITOR,CHIP CERAMIC 0.1MF
C532	1-107-826-11	s	CAPACITOR,CHIP CERAMIC 0.1MF
C533	1-107-826-11	s	CAPACITOR,CHIP CERAMIC 0.1MF
C534	1-107-826-11	s	CAPACITOR,CHIP CERAMIC 0.1MF
C535	1-107-826-11	s	CAPACITOR,CHIP CERAMIC 0.1MF
C536	1-107-826-11	s	CAPACITOR,CHIP CERAMIC 0.1MF
C537	1-107-826-11	s	CAPACITOR,CHIP CERAMIC 0.1MF
C538	1-107-826-11	s	CAPACITOR,CHIP CERAMIC 0.1MF
C539	1-107-826-11	s	CAPACITOR,CHIP CERAMIC 0.1MF
C540	1-107-826-11	s	CAPACITOR,CHIP CERAMIC 0.1MF
C541	1-107-826-11	s	CAPACITOR,CHIP CERAMIC 0.1MF
C542	1-107-826-11	s	CAPACITOR,CHIP CERAMIC 0.1MF
C543	1-107-826-11	s	CAPACITOR,CHIP CERAMIC 0.1MF
C544	1-107-826-11	s	CAPACITOR,CHIP CERAMIC 0.1MF
C545	1-107-826-11	s	CAPACITOR,CHIP CERAMIC 0.1MF
C546	1-107-826-11	s	CAPACITOR,CHIP CERAMIC 0.1MF
C547	1-107-826-11	s	CAPACITOR,CHIP CERAMIC 0.1MF
C548	1-107-826-11	s	CAPACITOR,CHIP CERAMIC 0.1MF
C549	1-107-826-11	s	CAPACITOR,CHIP CERAMIC 0.1MF
C550	1-107-826-11	s	CAPACITOR,CHIP CERAMIC 0.1MF
C551	1-107-826-11	s	CAPACITOR,CHIP CERAMIC 0.1MF
C552	1-107-826-11	s	CAPACITOR,CHIP CERAMIC 0.1MF
C553	1-107-826-11	s	CAPACITOR,CHIP CERAMIC 0.1MF
C554	1-127-708-11	s	CAP, POLYPYRROLE 100MF
C555	1-127-708-11	s	CAP, POLYPYRROLE 100MF
C600	1-107-826-11	s	CAPACITOR,CHIP CERAMIC 0.1MF
C601	1-107-826-11	s	CAPACITOR,CHIP CERAMIC 0.1MF
C602	1-107-826-11	s	CAPACITOR,CHIP CERAMIC 0.1MF
C603	1-107-826-11	s	CAPACITOR,CHIP CERAMIC 0.1MF
C604	1-107-826-11	s	CAPACITOR,CHIP CERAMIC 0.1MF

(HIF-1 BOARD [SUFFIX 22, 23] for HDW RECORDER)

Ref. No. or Q'ty	Part No.	SP	Description
C605	1-107-826-11	s	CAPACITOR,CHIP CERAMIC 0.1MF
C606	1-107-826-11	s	CAPACITOR,CHIP CERAMIC 0.1MF
C607	1-107-826-11	s	CAPACITOR,CHIP CERAMIC 0.1MF
C608	1-107-826-11	s	CAPACITOR,CHIP CERAMIC 0.1MF
C609	1-107-826-11	s	CAPACITOR,CHIP CERAMIC 0.1MF
C610	1-107-826-11	s	CAPACITOR,CHIP CERAMIC 0.1MF
C611	1-107-826-11	s	CAPACITOR,CHIP CERAMIC 0.1MF
C612	1-107-826-11	s	CAPACITOR,CHIP CERAMIC 0.1MF
C613	1-107-826-11	s	CAPACITOR,CHIP CERAMIC 0.1MF
C614	1-107-826-11	s	CAPACITOR,CHIP CERAMIC 0.1MF
C615	1-127-708-11	s	CAP, POLYPYRROLE 100MF
C616	1-127-708-11	s	CAP, POLYPYRROLE 100MF
C617	1-107-826-11	s	CAPACITOR,CHIP CERAMIC 0.1MF
C618	1-107-826-11	s	CAPACITOR,CHIP CERAMIC 0.1MF
C619	1-107-826-11	s	CAPACITOR,CHIP CERAMIC 0.1MF
C620	1-107-826-11	s	CAPACITOR,CHIP CERAMIC 0.1MF
C621	1-107-826-11	s	CAPACITOR,CHIP CERAMIC 0.1MF
C622	1-107-826-11	s	CAPACITOR,CHIP CERAMIC 0.1MF
C623	1-107-826-11	s	CAPACITOR,CHIP CERAMIC 0.1MF
C624	1-107-826-11	s	CAPACITOR,CHIP CERAMIC 0.1MF
C625	1-107-826-11	s	CAPACITOR,CHIP CERAMIC 0.1MF
C626	1-107-826-11	s	CAPACITOR,CHIP CERAMIC 0.1MF
C627	1-107-826-11	s	CAPACITOR,CHIP CERAMIC 0.1MF
C628	1-107-826-11	s	CAPACITOR,CHIP CERAMIC 0.1MF
C629	1-107-826-11	s	CAPACITOR,CHIP CERAMIC 0.1MF
C630	1-107-826-11	s	CAPACITOR,CHIP CERAMIC 0.1MF
C631	1-107-826-11	s	CAPACITOR,CHIP CERAMIC 0.1MF
C632	1-107-826-11	s	CAPACITOR,CHIP CERAMIC 0.1MF
C633	1-107-826-11	s	CAPACITOR,CHIP CERAMIC 0.1MF
C634	1-107-826-11	s	CAPACITOR,CHIP CERAMIC 0.1MF
C635	1-107-826-11	s	CAPACITOR,CHIP CERAMIC 0.1MF
C636	1-107-826-11	s	CAPACITOR,CHIP CERAMIC 0.1MF
C637	1-107-826-11	s	CAPACITOR,CHIP CERAMIC 0.1MF
C638	1-107-826-11	s	CAPACITOR,CHIP CERAMIC 0.1MF
C700	1-107-826-11	s	CAPACITOR,CHIP CERAMIC 0.1MF
C701	1-107-826-11	s	CAPACITOR,CHIP CERAMIC 0.1MF
C702	1-107-826-11	s	CAPACITOR,CHIP CERAMIC 0.1MF
C704	1-107-826-11	s	CAPACITOR,CHIP CERAMIC 0.1MF
C705	1-107-826-11	s	CAPACITOR,CHIP CERAMIC 0.1MF
C706	1-107-826-11	s	CAPACITOR,CHIP CERAMIC 0.1MF
C707	1-107-826-11	s	CAPACITOR,CHIP CERAMIC 0.1MF
C708	1-127-692-11	s	CAP, CHIP CERAMIC 10MF B 3216
C709	1-107-826-11	s	CAPACITOR,CHIP CERAMIC 0.1MF
C710	1-107-826-11	s	CAPACITOR,CHIP CERAMIC 0.1MF
C711	1-107-826-11	s	CAPACITOR,CHIP CERAMIC 0.1MF
C712	1-107-826-11	s	CAPACITOR,CHIP CERAMIC 0.1MF
C713	1-127-692-11	s	CAP, CHIP CERAMIC 10MF B 3216
C714	1-107-826-11	s	CAPACITOR,CHIP CERAMIC 0.1MF
C715	1-107-826-11	s	CAPACITOR,CHIP CERAMIC 0.1MF
C716	1-107-826-11	s	CAPACITOR,CHIP CERAMIC 0.1MF
C719	1-107-826-11	s	CAPACITOR,CHIP CERAMIC 0.1MF
C720	1-107-826-11	s	CAPACITOR,CHIP CERAMIC 0.1MF
C721	1-107-826-11	s	CAPACITOR,CHIP CERAMIC 0.1MF
C722	1-107-826-11	s	CAPACITOR,CHIP CERAMIC 0.1MF
C723	1-107-826-11	s	CAPACITOR,CHIP CERAMIC 0.1MF
C724	1-107-826-11	s	CAPACITOR,CHIP CERAMIC 0.1MF
C725	1-107-826-11	s	CAPACITOR,CHIP CERAMIC 0.1MF
C726	1-107-826-11	s	CAPACITOR,CHIP CERAMIC 0.1MF
C727	1-107-826-11	s	CAPACITOR,CHIP CERAMIC 0.1MF

(HIF-1 BOARD [SUFFIX 22, 23] for HDW RECORDER)

Ref. No. or Q'ty	Part No.	SP	Description
C728	1-107-826-11	s	CAPACITOR,CHIP CERAMIC 0.1MF
C729	1-107-826-11	s	CAPACITOR,CHIP CERAMIC 0.1MF
C730	1-107-826-11	s	CAPACITOR,CHIP CERAMIC 0.1MF
C731	1-107-826-11	s	CAPACITOR,CHIP CERAMIC 0.1MF
C732	1-127-692-11	s	CAP, CHIP CERAMIC 10MF B 3216
C733	1-127-692-11	s	CAP, CHIP CERAMIC 10MF B 3216
C734	1-127-692-11	s	CAP, CHIP CERAMIC 10MF B 3216
C735	1-107-826-11	s	CAPACITOR,CHIP CERAMIC 0.1MF
C736	1-107-826-11	s	CAPACITOR,CHIP CERAMIC 0.1MF
C737	1-107-826-11	s	CAPACITOR,CHIP CERAMIC 0.1MF
C738	1-107-826-11	s	CAPACITOR,CHIP CERAMIC 0.1MF
C740	1-107-826-11	s	CAPACITOR,CHIP CERAMIC 0.1MF
C741	1-107-826-11	s	CAPACITOR,CHIP CERAMIC 0.1MF
C742	1-107-826-11	s	CAPACITOR,CHIP CERAMIC 0.1MF
C743	1-107-826-11	s	CAPACITOR,CHIP CERAMIC 0.1MF
C744	1-107-826-11	s	CAPACITOR,CHIP CERAMIC 0.1MF
C745	1-107-826-11	s	CAPACITOR,CHIP CERAMIC 0.1MF
C746	1-162-970-11	s	CAPACITOR CERAMIC 0.01MF/25V B
C747 *2	1-107-826-11	s	CAPACITOR,CHIP CERAMIC 0.1MF
C800	1-127-708-11	s	CAP, POLYPYRROLE 100MF
C801	1-127-708-11	s	CAP, POLYPYRROLE 100MF
C802	1-107-826-11	s	CAPACITOR,CHIP CERAMIC 0.1MF
C803	1-107-826-11	s	CAPACITOR,CHIP CERAMIC 0.1MF
C804	1-107-826-11	s	CAPACITOR,CHIP CERAMIC 0.1MF
C805	1-107-826-11	s	CAPACITOR,CHIP CERAMIC 0.1MF
C806	1-107-826-11	s	CAPACITOR,CHIP CERAMIC 0.1MF
C807	1-107-826-11	s	CAPACITOR,CHIP CERAMIC 0.1MF
C808	1-107-826-11	s	CAPACITOR,CHIP CERAMIC 0.1MF
C809	1-107-826-11	s	CAPACITOR,CHIP CERAMIC 0.1MF
C810	1-107-826-11	s	CAPACITOR,CHIP CERAMIC 0.1MF
C811	1-107-826-11	s	CAPACITOR,CHIP CERAMIC 0.1MF
C812	1-107-826-11	s	CAPACITOR,CHIP CERAMIC 0.1MF
C813	1-107-826-11	s	CAPACITOR,CHIP CERAMIC 0.1MF
C814	1-107-826-11	s	CAPACITOR,CHIP CERAMIC 0.1MF
C815	1-107-826-11	s	CAPACITOR,CHIP CERAMIC 0.1MF
C816	1-107-826-11	s	CAPACITOR,CHIP CERAMIC 0.1MF
C817	1-107-826-11	s	CAPACITOR,CHIP CERAMIC 0.1MF
C818	1-107-826-11	s	CAPACITOR,CHIP CERAMIC 0.1MF
C819	1-107-826-11	s	CAPACITOR,CHIP CERAMIC 0.1MF
C820	1-107-826-11	s	CAPACITOR,CHIP CERAMIC 0.1MF
C821	1-107-826-11	s	CAPACITOR,CHIP CERAMIC 0.1MF
C822	1-107-826-11	s	CAPACITOR,CHIP CERAMIC 0.1MF
C823	1-107-826-11	s	CAPACITOR,CHIP CERAMIC 0.1MF
C824	1-107-826-11	s	CAPACITOR,CHIP CERAMIC 0.1MF
C825	1-107-826-11	s	CAPACITOR,CHIP CERAMIC 0.1MF
C826	1-107-826-11	s	CAPACITOR,CHIP CERAMIC 0.1MF
C827	1-107-826-11	s	CAPACITOR,CHIP CERAMIC 0.1MF
C828	1-107-826-11	s	CAPACITOR,CHIP CERAMIC 0.1MF
C829	1-107-826-11	s	CAPACITOR,CHIP CERAMIC 0.1MF
C830	1-107-826-11	s	CAPACITOR,CHIP CERAMIC 0.1MF
C831	1-107-826-11	s	CAPACITOR,CHIP CERAMIC 0.1MF
C832	1-107-826-11	s	CAPACITOR,CHIP CERAMIC 0.1MF
C833	1-107-826-11	s	CAPACITOR,CHIP CERAMIC 0.1MF
C834	1-107-826-11	s	CAPACITOR,CHIP CERAMIC 0.1MF
C835	1-107-826-11	s	CAPACITOR,CHIP CERAMIC 0.1MF
C836	1-107-826-11	s	CAPACITOR,CHIP CERAMIC 0.1MF
C837	1-107-826-11	s	CAPACITOR,CHIP CERAMIC 0.1MF
C838	1-162-919-11	s	CAPACITOR,CERAMIC 22PF/50V CH
C839	1-162-928-11	s	CAPACITOR,CERAMIC 120PF/50V CH

(HIF-1 BOARD [SUFFIX 22, 23] for HDW RECORDER)

Ref. No. or Q'ty	Part No.	SP	Description
C840	1-107-826-11	s	CAPACITOR,CHIP CERAMIC 0.1MF
C841	1-107-826-11	s	CAPACITOR,CHIP CERAMIC 0.1MF
C842	1-107-826-11	s	CAPACITOR,CHIP CERAMIC 0.1MF
C843	1-125-891-11	s	CAPACITOR CERAMIC 0.47MF/10V
C844	1-125-891-11	s	CAPACITOR CERAMIC 0.47MF/10V
C845	1-107-826-11	s	CAPACITOR,CHIP CERAMIC 0.1MF
C846	1-107-826-11	s	CAPACITOR,CHIP CERAMIC 0.1MF
C847	1-107-826-11	s	CAPACITOR,CHIP CERAMIC 0.1MF
C848	1-162-923-11	s	CAPACITOR,CERAMIC 47PF/50V CH
C849	1-162-970-11	s	CAPACITOR CERAMIC 0.01MF/25V B
C850	1-107-826-11	s	CAPACITOR,CHIP CERAMIC 0.1MF
C851	1-162-928-11	s	CAPACITOR,CERAMIC 120PF/50V CH
C852	1-107-826-11	s	CAPACITOR,CHIP CERAMIC 0.1MF
C853	1-162-927-11	s	CAPACITOR,CERAMIC 100PF/50V CH
C854	1-107-826-11	s	CAPACITOR,CHIP CERAMIC 0.1MF
C855	1-162-923-11	s	CAPACITOR,CERAMIC 47PF/50V CH
C856	1-107-826-11	s	CAPACITOR,CHIP CERAMIC 0.1MF
C857	1-107-826-11	s	CAPACITOR,CHIP CERAMIC 0.1MF
C858	1-162-924-11	s	CAPACITOR,CERAMIC 56PF/50V CH
C859	1-107-826-11	s	CAPACITOR,CHIP CERAMIC 0.1MF
C860	1-107-826-11	s	CAPACITOR,CHIP CERAMIC 0.1MF
C861	1-107-826-11	s	CAPACITOR,CHIP CERAMIC 0.1MF
C862	1-162-928-11	s	CAPACITOR,CERAMIC 120PF/50V CH
C863	1-107-826-11	s	CAPACITOR,CHIP CERAMIC 0.1MF
C864	1-162-928-11	s	CAPACITOR,CERAMIC 120PF/50V CH
C865	1-127-950-11	s	CAPACITOR,CHIP FILM 0.01MF
C866	1-127-950-11	s	CAPACITOR,CHIP FILM 0.01MF
C867	1-127-950-11	s	CAPACITOR,CHIP FILM 0.01MF
C868	1-127-956-11	s	CAPACITOR,CHIP FILM 0.1MF
C869	1-127-956-11	s	CAPACITOR,CHIP FILM 0.1MF
C870	1-127-956-11	s	CAPACITOR,CHIP FILM 0.1MF
C871	1-127-950-11	s	CAPACITOR,CHIP FILM 0.01MF
C872	1-127-956-11	s	CAPACITOR,CHIP FILM 0.1MF
C873	1-107-826-11	s	CAPACITOR,CHIP CERAMIC 0.1MF
C874	1-107-826-11	s	CAPACITOR,CHIP CERAMIC 0.1MF
C875	1-107-826-11	s	CAPACITOR,CHIP CERAMIC 0.1MF
C876	1-107-826-11	s	CAPACITOR,CHIP CERAMIC 0.1MF
C877	1-107-826-11	s	CAPACITOR,CHIP CERAMIC 0.1MF
C878	1-107-826-11	s	CAPACITOR,CHIP CERAMIC 0.1MF
C879	1-107-826-11	s	CAPACITOR,CHIP CERAMIC 0.1MF
C880	1-107-826-11	s	CAPACITOR,CHIP CERAMIC 0.1MF
C881	1-107-826-11	s	CAPACITOR,CHIP CERAMIC 0.1MF
C882	1-107-826-11	s	CAPACITOR,CHIP CERAMIC 0.1MF
C883	1-107-826-11	s	CAPACITOR,CHIP CERAMIC 0.1MF
C884	1-107-826-11	s	CAPACITOR,CHIP CERAMIC 0.1MF
C885	1-127-692-11	s	CAP, CHIP CERAMIC 10MF B 3216
C886	1-107-826-11	s	CAPACITOR,CHIP CERAMIC 0.1MF
C887	1-107-826-11	s	CAPACITOR,CHIP CERAMIC 0.1MF
C888	1-107-826-11	s	CAPACITOR,CHIP CERAMIC 0.1MF
C889	1-107-826-11	s	CAPACITOR,CHIP CERAMIC 0.1MF
C890	1-107-826-11	s	CAPACITOR,CHIP CERAMIC 0.1MF
C891	1-107-826-11	s	CAPACITOR,CHIP CERAMIC 0.1MF
C892	1-107-826-11	s	CAPACITOR,CHIP CERAMIC 0.1MF
C893	1-107-826-11	s	CAPACITOR,CHIP CERAMIC 0.1MF
C894	1-107-826-11	s	CAPACITOR,CHIP CERAMIC 0.1MF
C895	1-107-826-11	s	CAPACITOR,CHIP CERAMIC 0.1MF
C896	1-107-826-11	s	CAPACITOR,CHIP CERAMIC 0.1MF
C897	1-107-826-11	s	CAPACITOR,CHIP CERAMIC 0.1MF
C898	1-107-826-11	s	CAPACITOR,CHIP CERAMIC 0.1MF

(HIF-1 BOARD [SUFFIX 22, 23] for HDW RECORDER)

Ref. No. or Q'ty	Part No.	SP	Description
C899	1-107-826-11	s	CAPACITOR,CHIP CERAMIC 0.1MF
C900	1-162-970-11	s	CAPACITOR CERAMIC 0.01MF/25V B
C902	1-107-826-11	s	CAPACITOR,CHIP CERAMIC 0.1MF
C903	1-107-826-11	s	CAPACITOR,CHIP CERAMIC 0.1MF
C904	1-107-826-11	s	CAPACITOR,CHIP CERAMIC 0.1MF
C905	1-107-826-11	s	CAPACITOR,CHIP CERAMIC 0.1MF
C907	1-107-826-11	s	CAPACITOR,CHIP CERAMIC 0.1MF
C908	1-107-826-11	s	CAPACITOR,CHIP CERAMIC 0.1MF
C909	1-107-826-11	s	CAPACITOR,CHIP CERAMIC 0.1MF
C910	1-162-970-11	s	CAPACITOR CERAMIC 0.01MF/25V B
C911	1-107-826-11	s	CAPACITOR,CHIP CERAMIC 0.1MF
C912	1-107-826-11	s	CAPACITOR,CHIP CERAMIC 0.1MF
C913	1-107-826-11	s	CAPACITOR,CHIP CERAMIC 0.1MF
C914	1-107-826-11	s	CAPACITOR,CHIP CERAMIC 0.1MF
C915	1-107-826-11	s	CAPACITOR,CHIP CERAMIC 0.1MF
C916	1-107-826-11	s	CAPACITOR,CHIP CERAMIC 0.1MF
C917	1-107-826-11	s	CAPACITOR,CHIP CERAMIC 0.1MF
C918	1-107-826-11	s	CAPACITOR,CHIP CERAMIC 0.1MF
C919	1-107-826-11	s	CAPACITOR,CHIP CERAMIC 0.1MF
C920	1-107-826-11	s	CAPACITOR,CHIP CERAMIC 0.1MF
C921	1-107-826-11	s	CAPACITOR,CHIP CERAMIC 0.1MF
C922	1-107-826-11	s	CAPACITOR,CHIP CERAMIC 0.1MF
C923	1-107-826-11	s	CAPACITOR,CHIP CERAMIC 0.1MF
C924	1-107-826-11	s	CAPACITOR,CHIP CERAMIC 0.1MF
C925	1-162-927-11	s	CAPACITOR,CERAMIC 100PF/50V CH
C926	1-162-927-11	s	CAPACITOR,CERAMIC 100PF/50V CH
C927	1-162-927-11	s	CAPACITOR,CERAMIC 100PF/50V CH
C1000	1-127-708-11	s	CAP, POLYPYRROLE 100MF
C1001	1-127-708-11	s	CAP, POLYPYRROLE 100MF
C1002	1-127-708-11	s	CAP, POLYPYRROLE 100MF
C1003	1-107-826-11	s	CAPACITOR,CHIP CERAMIC 0.1MF
C1004	1-107-826-11	s	CAPACITOR,CHIP CERAMIC 0.1MF
C1005	1-107-826-11	s	CAPACITOR,CHIP CERAMIC 0.1MF
C1006	1-107-826-11	s	CAPACITOR,CHIP CERAMIC 0.1MF
C1007	1-107-826-11	s	CAPACITOR,CHIP CERAMIC 0.1MF
C1008	1-107-826-11	s	CAPACITOR,CHIP CERAMIC 0.1MF
C1009	1-107-826-11	s	CAPACITOR,CHIP CERAMIC 0.1MF
C1010	1-107-826-11	s	CAPACITOR,CHIP CERAMIC 0.1MF
C1011	1-107-826-11	s	CAPACITOR,CHIP CERAMIC 0.1MF
C1012	1-107-826-11	s	CAPACITOR,CHIP CERAMIC 0.1MF
C1015	1-127-708-11	s	CAP, POLYPYRROLE 100MF
C1017	1-127-708-11	s	CAP, POLYPYRROLE 100MF
C1019	1-131-603-11	s	CAP, POLYPYRROLE 100MF
C1022	1-162-970-11	s	CAPACITOR CERAMIC 0.01MF/25V B
C1025	1-107-826-11	s	CAPACITOR,CHIP CERAMIC 0.1MF
C1026	1-107-826-11	s	CAPACITOR,CHIP CERAMIC 0.1MF
C1029	1-115-416-11	s	CAPACITOR,CERAMIC 1000PF/25V
C1031	1-107-826-11	s	CAPACITOR,CHIP CERAMIC 0.1MF
C1032	1-107-826-11	s	CAPACITOR,CHIP CERAMIC 0.1MF
C1033	1-125-889-11	s	CAPACITOR, C.CERAMIC 2.2MF
C1034	1-107-826-11	s	CAPACITOR,CHIP CERAMIC 0.1MF
C1035	1-127-692-11	s	CAP, CHIP CERAMIC 10MF B 3216
C1037	1-115-416-11	s	CAPACITOR,CERAMIC 1000PF/25V
C1038	1-162-970-11	s	CAPACITOR CERAMIC 0.01MF/25V B
C1064	1-131-603-11	s	CAP, POLYPYRROLE 100MF
C1065	1-127-708-11	s	CAP, POLYPYRROLE 100MF
C1066	1-127-708-11	s	CAP, POLYPYRROLE 100MF
C1067	1-127-692-11	s	CAP, CHIP CERAMIC 10MF B 3216
C1068	1-127-692-11	s	CAP, CHIP CERAMIC 10MF B 3216

(HIF-1 BOARD [SUFFIX 22, 23] for HDW RECORDER)

Ref. No. or Q'ty	Part No.	SP	Description
C1069	1-127-692-11	s	CAP, CHIP CERAMIC 10MF B 3216
C1070	1-127-692-11	s	CAP, CHIP CERAMIC 10MF B 3216
C1071	1-127-692-11	s	CAP, CHIP CERAMIC 10MF B 3216
C1072	1-127-692-11	s	CAP, CHIP CERAMIC 10MF B 3216
C1073	1-107-826-11	s	CAPACITOR,CHIP CERAMIC 0.1MF
C1074	1-107-826-11	s	CAPACITOR,CHIP CERAMIC 0.1MF
C1075	1-107-826-11	s	CAPACITOR,CHIP CERAMIC 0.1MF
C1076	1-107-826-11	s	CAPACITOR,CHIP CERAMIC 0.1MF
C1100	1-107-826-11	s	CAPACITOR,CHIP CERAMIC 0.1MF
C1101	1-107-826-11	s	CAPACITOR,CHIP CERAMIC 0.1MF
C1102	1-107-826-11	s	CAPACITOR,CHIP CERAMIC 0.1MF
C1103	1-107-826-11	s	CAPACITOR,CHIP CERAMIC 0.1MF
C1104	1-107-826-11	s	CAPACITOR,CHIP CERAMIC 0.1MF
C1105	1-107-826-11	s	CAPACITOR,CHIP CERAMIC 0.1MF
C1106	1-107-826-11	s	CAPACITOR,CHIP CERAMIC 0.1MF
C1800	1-107-826-11	s	CAPACITOR,CHIP CERAMIC 0.1MF
C1801	1-107-826-11	s	CAPACITOR,CHIP CERAMIC 0.1MF
C1802	1-107-826-11	s	CAPACITOR,CHIP CERAMIC 0.1MF
C1803	1-107-826-11	s	CAPACITOR,CHIP CERAMIC 0.1MF
C1804	1-107-826-11	s	CAPACITOR,CHIP CERAMIC 0.1MF
C1805	1-107-826-11	s	CAPACITOR,CHIP CERAMIC 0.1MF
CN2	1-815-085-91	o	CONNECTOR, BOARD TO BOARD 90P
CN200	1-580-789-21	o	PIN,CONNECTOR (SMD) 6P
CN900	1-580-756-21	o	PIN, CONNECTOR 7P
D700	8-719-820-41	s	DIODE 1SS302
D1000	8-719-066-98	s	DIODE RB051L-40
D1001	8-719-938-75	s	DIODE SB05-05CP (RECTI)
D1002	8-719-938-75	s	DIODE SB05-05CP (RECTI)
D1003	8-719-066-98	s	DIODE RB051L-40
F1000	⚠ 1-576-270-11	s	FUSE CHIP 4A/125V (6125)
F1001 *2	⚠ 1-576-329-11	s	FUSE CHIP 10A/125V (6125)
*1	⚠ 1-576-270-11	s	FUSE CHIP 4A/125V (6125)
FB700	1-414-864-11	s	INDUCTOR, MICRO (CHIP TYPE)
FB701	1-414-864-11	s	INDUCTOR, MICRO (CHIP TYPE)
FB702	1-414-864-11	s	INDUCTOR, MICRO (CHIP TYPE)
FB800	1-414-864-11	s	INDUCTOR, MICRO (CHIP TYPE)
FB801	1-414-864-11	s	INDUCTOR, MICRO (CHIP TYPE)
FB802	1-414-864-11	s	INDUCTOR, MICRO (CHIP TYPE)
FB803	1-414-864-11	s	INDUCTOR, MICRO (CHIP TYPE)
FB804	1-414-864-11	s	INDUCTOR, MICRO (CHIP TYPE)
FB805	1-414-864-11	s	INDUCTOR, MICRO (CHIP TYPE)
FB806	1-414-864-11	s	INDUCTOR, MICRO (CHIP TYPE)
FB807	1-414-864-11	s	INDUCTOR, MICRO (CHIP TYPE)
FB808	1-414-864-11	s	INDUCTOR, MICRO (CHIP TYPE)
FB809	1-414-864-11	s	INDUCTOR, MICRO (CHIP TYPE)
FB810	1-414-864-11	s	INDUCTOR, MICRO (CHIP TYPE)
IC50	8-759-392-77	s	IC SN74LVC245APW (E20)
IC52	8-759-549-15	s	IC SN74LV245APWR
IC53	8-759-549-15	s	IC SN74LV245APWR
IC54	8-759-549-15	s	IC SN74LV245APWR
IC55	8-759-293-90	s	IC MSM514221B-30JS
IC56	8-759-392-77	s	IC SN74LVC245APW (E20)
IC58	6-802-270-01	s	IC EPC2LC20-HIF-IC58-V2.00
IC59	8-759-293-90	s	IC MSM514221B-30JS
IC60	8-759-293-90	s	IC MSM514221B-30JS
IC100	6-700-804-01	s	IC SN74LVC574APWR

(HIF-1 BOARD [SUFFIX 22, 23] for HDW RECORDER)

Ref. No. or Q'ty	Part No.	SP	Description
IC101	6-700-804-01	s	IC SN74LVC574APWR
IC102	8-759-712-31	s	IC SN65LVDT388DBTR
IC103	8-759-712-31	s	IC SN65LVDT388DBTR
IC104	8-759-712-31	s	IC SN65LVDT388DBTR
IC105	8-759-694-36	s	IC SN74CBTLV3257PWR
IC106	8-759-639-85	s	IC SN65LVDS31DR
IC107	8-759-712-32	s	IC SN65LVDS389DBTR
IC108	8-759-712-32	s	IC SN65LVDS389DBTR
IC109	8-759-712-32	s	IC SN65LVDS389DBTR
IC110	6-700-804-01	s	IC SN74LVC574APWR
IC111	6-700-804-01	s	IC SN74LVC574APWR
IC112	6-700-804-01	s	IC SN74LVC574APWR
IC113	6-700-804-01	s	IC SN74LVC574APWR
IC114	6-700-804-01	s	IC SN74LVC574APWR
IC201	8-759-549-01	s	IC SN74LV125APWR
IC202	8-759-679-55	s	IC SN74LVC08APWR
IC203	8-759-662-39	s	IC 74VHCT245AMTCX
IC204	6-702-148-01	s	IC XC61CN2702NR
IC205	8-759-539-53	s	IC MB90096PF-G-139-BND(ER)
IC208	8-759-271-86	s	IC TC7SH04FU
IC209	8-759-669-44	s	IC SN74LVC74APWR-12
IC301	8-759-549-15	s	IC SN74LV245APWR
IC302	6-702-238-11	s	IC HY57V643220CT-7TR
IC303	6-702-238-11	s	IC HY57V643220CT-7TR
IC304	6-702-238-11	s	IC HY57V643220CT-7TR
IC305	6-702-238-11	s	IC HY57V643220CT-7TR
IC401	8-759-651-59	s	IC SN74CBTLV3245APWR
IC402	8-759-651-59	s	IC SN74CBTLV3245APWR
IC403	8-759-651-59	s	IC SN74CBTLV3245APWR
IC404	8-759-651-59	s	IC SN74CBTLV3245APWR
IC405	8-759-651-59	s	IC SN74CBTLV3245APWR
IC406	8-759-651-59	s	IC SN74CBTLV3245APWR
IC407	6-704-173-01	s	IC MS81V04160A-25TB
IC408	6-704-173-01	s	IC MS81V04160A-25TB
IC409	6-704-173-01	s	IC MS81V04160A-25TB
IC410	6-704-173-01	s	IC MS81V04160A-25TB
IC411	6-700-804-01	s	IC SN74LVC574APWR
IC412	6-700-804-01	s	IC SN74LVC574APWR
IC413	6-700-804-01	s	IC SN74LVC574APWR
IC414	6-700-804-01	s	IC SN74LVC574APWR
IC415	6-700-804-01	s	IC SN74LVC574APWR
IC416	6-700-804-01	s	IC SN74LVC574APWR
IC501	6-702-238-11	s	IC HY57V643220CT-7TR
IC502	6-702-238-11	s	IC HY57V643220CT-7TR
IC504	6-702-238-11	s	IC HY57V643220CT-7TR
IC505	6-702-238-11	s	IC HY57V643220CT-7TR
IC601	6-702-238-11	s	IC HY57V643220CT-7TR
IC602	8-759-392-77	s	IC SN74LVC245APW (E20)
IC603	8-759-392-77	s	IC SN74LVC245APW (E20)
IC604	8-759-392-77	s	IC SN74LVC245APW (E20)
IC605	8-759-196-96	s	IC TC7SH08FU (TE85R)
IC606	8-759-196-96	s	IC TC7SH08FU (TE85R)
IC700	8-759-639-86	s	IC SN65LVDS32DR
IC701	8-759-392-77	s	IC SN74LVC245APW (E20)
IC703	8-759-598-13	s	IC CDC2510CPWR
IC704	8-759-694-36	s	IC SN74CBTLV3257PWR
IC705	8-759-639-85	s	IC SN65LVDS31DR
IC707	8-759-392-77	s	IC SN74LVC245APW (E20)
IC708	8-759-392-77	s	IC SN74LVC245APW (E20)

(HIF-1 BOARD [SUFFIX 22, 23] for HDW RECORDER)

Ref. No. or Q'ty	Part No.	SP	Description
IC709	8-759-196-96	s	IC TC7SH08FU (TE85R)
IC710	8-759-271-86	s	IC TC7SH04FU
IC711	8-759-585-54	s	IC SN74LVC240APWR
IC712	8-759-598-13	s	IC CDC2510CPWR
IC713	8-759-598-13	s	IC CDC2510CPWR
IC715	8-759-592-44	s	IC TC7SZ04FU(TE85R)
IC716	8-759-675-47	s	IC SN74LVC04APWR
IC718	8-759-698-08	s	IC SN74CBTLV1G125DCKR
IC719	8-759-698-08	s	IC SN74CBTLV1G125DCKR
IC720	8-759-271-86	s	IC TC7SH04FU
IC721	8-759-698-08	s	IC SN74CBTLV1G125DCKR
IC722	8-759-698-08	s	IC SN74CBTLV1G125DCKR
IC723	8-759-271-86	s	IC TC7SH04FU
IC724	8-759-698-08	s	IC SN74CBTLV1G125DCKR
IC725	8-759-698-08	s	IC SN74CBTLV1G125DCKR
IC726	8-759-271-86	s	IC TC7SH04FU
IC727	8-759-698-08	s	IC SN74CBTLV1G125DCKR
IC728	8-759-698-08	s	IC SN74CBTLV1G125DCKR
IC729	8-759-271-86	s	IC TC7SH04FU
IC730	8-759-675-47	s	IC SN74LVC04APWR
IC731	8-759-592-44	s	IC TC7SZ04FU(TE85R)
IC732	8-759-592-44	s	IC TC7SZ04FU(TE85R)
IC733 *2	6-703-875-01	s	IC CDCVF2505PWR
IC800	8-759-573-91	s	IC AD8055ART-REEL7
IC801	8-759-987-27	s	IC LM1881M
IC802	8-759-573-91	s	IC AD8055ART-REEL7
IC803	6-701-453-01	s	IC SN75207BNSR
IC804	8-759-196-96	s	IC TC7SH08FU (TE85R)
IC805	8-759-472-35	s	IC 74VHC221AMTCX
IC806	8-759-472-04	s	IC 74VHC74MTCX
IC807	8-759-472-35	s	IC 74VHC221AMTCX
IC808	8-759-678-15	s	IC TLV2231CDBVR
IC809	8-759-485-79	s	IC TC7SET08FU (TE85L)
IC810	8-759-678-15	s	IC TLV2231CDBVR
IC811	8-759-678-15	s	IC TLV2231CDBVR
IC812	8-759-678-15	s	IC TLV2231CDBVR
IC813	8-759-564-49	s	IC TC7W53FU-TE12R
IC814	8-759-564-49	s	IC TC7W53FU-TE12R
IC815	8-759-592-47	s	IC TC7SZ08FU(TE85R)
IC816	8-759-592-49	s	IC TC7SZ125FU(TE85R)
IC817	8-759-592-49	s	IC TC7SZ125FU(TE85R)
IC818	8-759-592-47	s	IC TC7SZ08FU(TE85R)
IC819	8-759-592-47	s	IC TC7SZ08FU(TE85R)
IC820	8-759-592-49	s	IC TC7SZ125FU(TE85R)
IC821	8-759-592-47	s	IC TC7SZ08FU(TE85R)
IC822	8-759-524-08	s	IC TC74VHC139FT(EL)
IC823	8-759-592-49	s	IC TC7SZ125FU(TE85R)
IC824	8-759-592-47	s	IC TC7SZ08FU(TE85R)
IC825	8-759-592-47	s	IC TC7SZ08FU(TE85R)
IC826	8-759-592-47	s	IC TC7SZ08FU(TE85R)
IC827	8-759-183-53	s	IC TL431CPK-E2
IC828	8-759-669-78	s	IC TLC2933IPWR-12
IC829	8-759-669-78	s	IC TLC2933IPWR-12
IC830	8-759-472-35	s	IC 74VHC221AMTCX
IC900	8-759-549-15	s	IC SN74LV245APWR
IC901	8-759-549-15	s	IC SN74LV245APWR
IC902	8-759-549-15	s	IC SN74LV245APWR
IC903	8-759-549-15	s	IC SN74LV245APWR
IC905	8-759-549-15	s	IC SN74LV245APWR

(HIF-1 BOARD [SUFFIX 22, 23] for HDW RECORDER)

Ref. No. or Q'ty	Part No.	SP	Description
IC906	8-759-549-15	s	IC SN74LV245APWR
IC907	8-759-549-15	s	IC SN74LV245APWR
IC908	8-759-549-15	s	IC SN74LV245APWR
IC909	8-759-661-00	s	IC ISPLSI2192VE-100LT128
IC910	8-759-549-15	s	IC SN74LV245APWR
IC912	8-759-549-15	s	IC SN74LV245APWR
IC913	8-759-662-38	s	IC 74VHCT08AMTCX
IC914	8-759-471-96	s	IC 74VHC08MTCX
IC915	8-759-327-60	s	IC TC7W125FU-TE12R
IC916	8-759-472-24	s	IC 74VHC157MTCX
IC919	8-759-271-86	s	IC TC7SH04FU
IC1000	8-759-543-08	s	IC LM2940CSX-5.0
IC1001	8-759-539-89	s	IC LM2990SX-5.0
IC1002	8-759-642-22	s	IC UPC29M05T-E2
IC1004	8-759-597-57	s	IC LTC1628CG#TR
IC1005	8-759-833-99	s	IC MC74HC4052ADTR2
IC1006	8-759-833-99	s	IC MC74HC4052ADTR2
IC1007	8-759-485-79	s	IC TC7SET08FU (TE85L)
IC1008	8-759-485-79	s	IC TC7SET08FU (TE85L)
IC1100	8-759-392-77	s	IC SN74LVC245APW (E20)
IC1101	8-759-392-77	s	IC SN74LVC245APW (E20)
IC1102	8-759-392-77	s	IC SN74LVC245APW (E20)
IC1103	8-759-549-15	s	IC SN74LV245APWR
IC1104	8-759-472-24	s	IC 74VHC157MTCX
IC1105	8-759-472-24	s	IC 74VHC157MTCX
IC1106	8-759-471-91	s	IC 74VHC04MTCX
IS58	1-251-093-11	s	SOCKET,IC
L50	1-414-392-31	s	INDUCTOR (SMD) 1.0UH
L800	1-412-987-31	s	INDUCTOR (SMALL TYPE) 4.70UH
L1000	1-406-864-21	s	COIL,CHOKE 4.7UH
L1001	1-406-864-21	s	COIL,CHOKE 4.7UH
L1002	1-406-864-21	s	COIL,CHOKE 4.7UH
L1003	1-406-864-21	s	COIL,CHOKE 4.7UH
L1004	1-406-864-21	s	COIL,CHOKE 4.7UH
L1005	1-469-970-11	s	INDUCTOR, (SMD) 15UH
L1006	1-469-970-11	s	INDUCTOR, (SMD) 15UH
L1007	1-406-864-21	s	COIL,CHOKE 4.7UH
Q200	8-729-928-81	s	TRANSISTOR DTC144EE
Q201	8-729-928-54	s	TRANSISTOR DTA123JE
Q202	8-729-928-19	s	TRANSISTOR 2SA1774R
Q203	8-729-047-32	s	TRANSISTOR SI4425DY-T1
Q700	8-729-928-81	s	TRANSISTOR DTC144EE
Q701	8-729-928-81	s	TRANSISTOR DTC144EE
Q703	8-729-928-19	s	TRANSISTOR 2SA1774R
Q704	8-729-928-19	s	TRANSISTOR 2SA1774R
Q800	8-729-928-19	s	TRANSISTOR 2SA1774R
Q801	8-729-927-99	s	TRANSISTOR 2SC4617R
Q802	8-729-143-07	s	TRANSISTOR 2SA1610-Y33
Q1000	8-729-047-85	s	TRANSISTOR SI4416DY-T1
Q1001	8-729-047-85	s	TRANSISTOR SI4416DY-T1
Q1002	8-729-047-85	s	TRANSISTOR SI4416DY-T1
Q1003	8-729-047-85	s	TRANSISTOR SI4416DY-T1
R50	1-218-871-11	s	RESISTOR,CHIP 10K 1/10W (1608)
R51	1-218-871-11	s	RESISTOR,CHIP 10K 1/10W (1608)
R52	1-218-871-11	s	RESISTOR,CHIP 10K 1/10W (1608)
R53	1-218-847-11	s	RESISTOR, CHIP 1K 1/10W (1608)
R54	1-218-847-11	s	RESISTOR, CHIP 1K 1/10W (1608)

(HIF-1 BOARD [SUFFIX 22, 23] for HDW RECORDER)

Ref. No. or Q'ty	Part No.	SP	Description
R55	1-218-847-11	s	RESISTOR, CHIP 1K 1/10W (1608)
R57	1-218-847-11	s	RESISTOR, CHIP 1K 1/10W (1608)
R58	1-218-847-11	s	RESISTOR, CHIP 1K 1/10W (1608)
R59	1-218-847-11	s	RESISTOR, CHIP 1K 1/10W (1608)
R60	1-218-847-11	s	RESISTOR, CHIP 1K 1/10W (1608)
R61	1-218-847-11	s	RESISTOR, CHIP 1K 1/10W (1608)
R62	1-218-863-11	s	RESISTOR,CHIP 4.7K 1/10W(1608)
R63	1-218-863-11	s	RESISTOR,CHIP 4.7K 1/10W(1608)
R64	1-218-863-11	s	RESISTOR,CHIP 4.7K 1/10W(1608)
R65	1-218-863-11	s	RESISTOR,CHIP 4.7K 1/10W(1608)
R66	1-218-895-11	s	RESISTOR,CHIP 100K 1/10W(1608)
R100	1-211-985-11	s	RESISTOR,CHIP 47 1/10W (1608)
R101	1-211-985-11	s	RESISTOR,CHIP 47 1/10W (1608)
R125	1-211-985-11	s	RESISTOR,CHIP 47 1/10W (1608)
R126	1-211-977-11	s	RESISTOR,CHIP 22 1/10W (1608)
R127	1-211-977-11	s	RESISTOR,CHIP 22 1/10W (1608)
R128	1-211-977-11	s	RESISTOR,CHIP 22 1/10W (1608)
R129	1-218-847-11	s	RESISTOR, CHIP 1K 1/10W (1608)
R130	1-218-847-11	s	RESISTOR, CHIP 1K 1/10W (1608)
R200	1-211-985-11	s	RESISTOR,CHIP 47 1/10W (1608)
R201	1-211-985-11	s	RESISTOR,CHIP 47 1/10W (1608)
R202	1-211-985-11	s	RESISTOR,CHIP 47 1/10W (1608)
R203	1-211-985-11	s	RESISTOR,CHIP 47 1/10W (1608)
R204	1-211-985-11	s	RESISTOR,CHIP 47 1/10W (1608)
R205	1-211-985-11	s	RESISTOR,CHIP 47 1/10W (1608)
R207	1-211-985-11	s	RESISTOR,CHIP 47 1/10W (1608)
R208	1-211-985-11	s	RESISTOR,CHIP 47 1/10W (1608)
R209	1-211-985-11	s	RESISTOR,CHIP 47 1/10W (1608)
R210	1-211-985-11	s	RESISTOR,CHIP 47 1/10W (1608)
R211	1-211-985-11	s	RESISTOR,CHIP 47 1/10W (1608)
R212	1-211-985-11	s	RESISTOR,CHIP 47 1/10W (1608)
R213	1-211-985-11	s	RESISTOR,CHIP 47 1/10W (1608)
R214	1-211-985-11	s	RESISTOR,CHIP 47 1/10W (1608)
R215	1-211-985-11	s	RESISTOR,CHIP 47 1/10W (1608)
R216	1-211-985-11	s	RESISTOR,CHIP 47 1/10W (1608)
R217	1-211-985-11	s	RESISTOR,CHIP 47 1/10W (1608)
R218	1-211-985-11	s	RESISTOR,CHIP 47 1/10W (1608)
R219	1-211-985-11	s	RESISTOR,CHIP 47 1/10W (1608)
R220	1-211-985-11	s	RESISTOR,CHIP 47 1/10W (1608)
R221	1-211-985-11	s	RESISTOR,CHIP 47 1/10W (1608)
R222	1-211-985-11	s	RESISTOR,CHIP 47 1/10W (1608)
R223	1-211-985-11	s	RESISTOR,CHIP 47 1/10W (1608)
R224	1-211-985-11	s	RESISTOR,CHIP 47 1/10W (1608)
R225	1-211-985-11	s	RESISTOR,CHIP 47 1/10W (1608)
R226	1-211-985-11	s	RESISTOR,CHIP 47 1/10W (1608)
R227	1-211-985-11	s	RESISTOR,CHIP 47 1/10W (1608)
R228	1-211-985-11	s	RESISTOR,CHIP 47 1/10W (1608)
R229	1-211-985-11	s	RESISTOR,CHIP 47 1/10W (1608)
R230	1-211-985-11	s	RESISTOR,CHIP 47 1/10W (1608)
R231	1-211-985-11	s	RESISTOR,CHIP 47 1/10W (1608)
R232	1-211-985-11	s	RESISTOR,CHIP 47 1/10W (1608)
R233	1-211-985-11	s	RESISTOR,CHIP 47 1/10W (1608)
R234	1-211-985-11	s	RESISTOR,CHIP 47 1/10W (1608)
R235	1-211-985-11	s	RESISTOR,CHIP 47 1/10W (1608)
R236	1-211-985-11	s	RESISTOR,CHIP 47 1/10W (1608)
R237	1-211-985-11	s	RESISTOR,CHIP 47 1/10W (1608)
R238	1-211-985-11	s	RESISTOR,CHIP 47 1/10W (1608)
R239	1-211-985-11	s	RESISTOR,CHIP 47 1/10W (1608)
R240	1-211-985-11	s	RESISTOR,CHIP 47 1/10W (1608)

(HIF-1 BOARD [SUFFIX 22, 23] for HDW RECORDER)

Ref. No. or Q'ty	Part No.	SP	Description
R241	1-211-985-11	s	RESISTOR,CHIP 47 1/10W (1608)
R242	1-211-985-11	s	RESISTOR,CHIP 47 1/10W (1608)
R243	1-211-985-11	s	RESISTOR,CHIP 47 1/10W (1608)
R244	1-211-985-11	s	RESISTOR,CHIP 47 1/10W (1608)
R245	1-211-985-11	s	RESISTOR,CHIP 47 1/10W (1608)
R246	1-211-985-11	s	RESISTOR,CHIP 47 1/10W (1608)
R247	1-211-985-11	s	RESISTOR,CHIP 47 1/10W (1608)
R248	1-211-985-11	s	RESISTOR,CHIP 47 1/10W (1608)
R249	1-211-985-11	s	RESISTOR,CHIP 47 1/10W (1608)
R250	1-211-985-11	s	RESISTOR,CHIP 47 1/10W (1608)
R252	1-218-871-11	s	RESISTOR,CHIP 10K 1/10W (1608)
R253	1-211-985-11	s	RESISTOR,CHIP 47 1/10W (1608)
R254	1-218-835-11	s	RESISTOR,CHIP 330 1/10W (1608)
R255	1-218-847-11	s	RESISTOR, CHIP 1K 1/10W (1608)
R256	1-218-847-11	s	RESISTOR, CHIP 1K 1/10W (1608)
R257	1-218-871-11	s	RESISTOR,CHIP 10K 1/10W (1608)
R258	1-211-985-11	s	RESISTOR,CHIP 47 1/10W (1608)
R259	1-211-985-11	s	RESISTOR,CHIP 47 1/10W (1608)
R260	1-211-985-11	s	RESISTOR,CHIP 47 1/10W (1608)
R261	1-211-985-11	s	RESISTOR,CHIP 47 1/10W (1608)
R262	1-211-985-11	s	RESISTOR,CHIP 47 1/10W (1608)
R263	1-218-847-11	s	RESISTOR, CHIP 1K 1/10W (1608)
R264	1-218-847-11	s	RESISTOR, CHIP 1K 1/10W (1608)
R265	1-218-835-11	s	RESISTOR,CHIP 330 1/10W (1608)
R266	1-218-835-11	s	RESISTOR,CHIP 330 1/10W (1608)
R267	1-218-835-11	s	RESISTOR,CHIP 330 1/10W (1608)
R268	1-218-863-11	s	RESISTOR,CHIP 4.7K 1/10W(1608)
R269	1-211-985-11	s	RESISTOR,CHIP 47 1/10W (1608)
R273	1-216-864-11	s	CONDUCTOR, CHIP (1608)
R300	1-218-883-11	s	RESISTOR,CHIP 33K 1/10W (1608)
R301	1-218-847-11	s	RESISTOR, CHIP 1K 1/10W (1608)
R302	1-211-985-11	s	RESISTOR,CHIP 47 1/10W (1608)
R303	1-211-985-11	s	RESISTOR,CHIP 47 1/10W (1608)
R310	1-216-864-11	s	CONDUCTOR, CHIP (1608)
R313	1-216-864-11	s	CONDUCTOR, CHIP (1608)
R400	1-211-977-11	s	RESISTOR,CHIP 22 1/10W (1608)
R401	1-211-977-11	s	RESISTOR,CHIP 22 1/10W (1608)
R402	1-211-977-11	s	RESISTOR,CHIP 22 1/10W (1608)
R403	1-211-977-11	s	RESISTOR,CHIP 22 1/10W (1608)
R404	1-211-985-11	s	RESISTOR,CHIP 47 1/10W (1608)
R405	1-211-985-11	s	RESISTOR,CHIP 47 1/10W (1608)
R406	1-211-985-11	s	RESISTOR,CHIP 47 1/10W (1608)
R407	1-211-985-11	s	RESISTOR,CHIP 47 1/10W (1608)
R408	1-211-985-11	s	RESISTOR,CHIP 47 1/10W (1608)
R409	1-211-985-11	s	RESISTOR,CHIP 47 1/10W (1608)
R418	1-211-985-11	s	RESISTOR,CHIP 47 1/10W (1608)
R419	1-211-985-11	s	RESISTOR,CHIP 47 1/10W (1608)
R501	1-211-985-11	s	RESISTOR,CHIP 47 1/10W (1608)
R502	1-211-985-11	s	RESISTOR,CHIP 47 1/10W (1608)
R503	1-216-864-11	s	CONDUCTOR, CHIP (1608)
R504	1-216-864-11	s	CONDUCTOR, CHIP (1608)
R600	1-218-871-11	s	RESISTOR,CHIP 10K 1/10W (1608)
R601	1-218-871-11	s	RESISTOR,CHIP 10K 1/10W (1608)
R602	1-218-871-11	s	RESISTOR,CHIP 10K 1/10W (1608)
R603	1-218-871-11	s	RESISTOR,CHIP 10K 1/10W (1608)
R604	1-218-871-11	s	RESISTOR,CHIP 10K 1/10W (1608)
R605	1-218-871-11	s	RESISTOR,CHIP 10K 1/10W (1608)
R606	1-218-871-11	s	RESISTOR,CHIP 10K 1/10W (1608)
R607	1-218-871-11	s	RESISTOR,CHIP 10K 1/10W (1608)

(HIF-1 BOARD [SUFFIX 22, 23] for HDW RECORDER)

Ref. No. or Q'ty	Part No.	SP	Description
R608	1-218-871-11	s	RESISTOR,CHIP 10K 1/10W (1608)
R609	1-218-871-11	s	RESISTOR,CHIP 10K 1/10W (1608)
R610	1-218-871-11	s	RESISTOR,CHIP 10K 1/10W (1608)
R611	1-218-871-11	s	RESISTOR,CHIP 10K 1/10W (1608)
R612	1-218-871-11	s	RESISTOR,CHIP 10K 1/10W (1608)
R613	1-218-871-11	s	RESISTOR,CHIP 10K 1/10W (1608)
R614	1-218-871-11	s	RESISTOR,CHIP 10K 1/10W (1608)
R615	1-218-871-11	s	RESISTOR,CHIP 10K 1/10W (1608)
R616	1-218-871-11	s	RESISTOR,CHIP 10K 1/10W (1608)
R617	1-218-871-11	s	RESISTOR,CHIP 10K 1/10W (1608)
R618	1-218-871-11	s	RESISTOR,CHIP 10K 1/10W (1608)
R619	1-218-871-11	s	RESISTOR,CHIP 10K 1/10W (1608)
R620	1-211-985-11	s	RESISTOR,CHIP 47 1/10W (1608)
R621	1-211-985-11	s	RESISTOR,CHIP 47 1/10W (1608)
R622	1-211-985-11	s	RESISTOR,CHIP 47 1/10W (1608)
R623	1-211-985-11	s	RESISTOR,CHIP 47 1/10W (1608)
R624	1-211-985-11	s	RESISTOR,CHIP 47 1/10W (1608)
R625	1-211-985-11	s	RESISTOR,CHIP 47 1/10W (1608)
R626	1-211-985-11	s	RESISTOR,CHIP 47 1/10W (1608)
R627	1-218-831-11	s	RESISTOR, CHIP 220 1/10W(1608)
R628	1-218-831-11	s	RESISTOR, CHIP 220 1/10W(1608)
R700	1-218-823-11	s	RESISTOR,CHIP 100 1/10W (1608)
R701	1-218-823-11	s	RESISTOR,CHIP 100 1/10W (1608)
R702	1-218-823-11	s	RESISTOR,CHIP 100 1/10W (1608)
R703	1-218-823-11	s	RESISTOR,CHIP 100 1/10W (1608)
R704	1-218-831-11	s	RESISTOR, CHIP 220 1/10W(1608)
R705	1-218-831-11	s	RESISTOR, CHIP 220 1/10W(1608)
R706	1-218-851-11	s	RESISTOR,CHIP 1.5K 1/10W(1608)
R707	1-218-847-11	s	RESISTOR, CHIP 1K 1/10W (1608)
R708	1-218-863-11	s	RESISTOR,CHIP 4.7K 1/10W(1608)
R709	1-218-863-11	s	RESISTOR,CHIP 4.7K 1/10W(1608)
R710	1-218-863-11	s	RESISTOR,CHIP 4.7K 1/10W(1608)
R711	1-211-985-11	s	RESISTOR,CHIP 47 1/10W (1608)
R712	1-211-985-11	s	RESISTOR,CHIP 47 1/10W (1608)
R713	1-211-985-11	s	RESISTOR,CHIP 47 1/10W (1608)
R714	1-211-985-11	s	RESISTOR,CHIP 47 1/10W (1608)
R716	1-216-864-11	s	CONDUCTOR, CHIP (1608)
R717	1-216-864-11	s	CONDUCTOR, CHIP (1608)
R718	1-216-864-11	s	CONDUCTOR, CHIP (1608)
R719	1-218-863-11	s	RESISTOR,CHIP 4.7K 1/10W(1608)
R720	1-216-864-11	s	CONDUCTOR, CHIP (1608)
R721	1-216-864-11	s	CONDUCTOR, CHIP (1608)
R722	1-216-864-11	s	CONDUCTOR, CHIP (1608)
R723	1-216-864-11	s	CONDUCTOR, CHIP (1608)
R724	1-216-864-11	s	CONDUCTOR, CHIP (1608)
R725	1-216-864-11	s	CONDUCTOR, CHIP (1608)
R726	1-216-864-11	s	CONDUCTOR, CHIP (1608)
R727	1-216-864-11	s	CONDUCTOR, CHIP (1608)
R728	1-216-864-11	s	CONDUCTOR, CHIP (1608)
R729	1-218-857-11	s	RESISTOR,CHIP 2.7K 1/10W(1608)
R733	1-211-985-11	s	RESISTOR,CHIP 47 1/10W (1608)
R734	1-211-985-11	s	RESISTOR,CHIP 47 1/10W (1608)
R735	1-211-985-11	s	RESISTOR,CHIP 47 1/10W (1608)
R736	1-211-985-11	s	RESISTOR,CHIP 47 1/10W (1608)
R737	1-211-985-11	s	RESISTOR,CHIP 47 1/10W (1608)
R738	1-211-985-11	s	RESISTOR,CHIP 47 1/10W (1608)
R739	1-211-985-11	s	RESISTOR,CHIP 47 1/10W (1608)
R740	1-211-985-11	s	RESISTOR,CHIP 47 1/10W (1608)
R743	1-211-985-11	s	RESISTOR,CHIP 47 1/10W (1608)

(HIF-1 BOARD [SUFFIX 22, 23] for HDW RECORDER)

Ref. No. or Q'ty	Part No.	SP	Description
R744	1-211-985-11	s	RESISTOR,CHIP 47 1/10W (1608)
R745	1-211-985-11	s	RESISTOR,CHIP 47 1/10W (1608)
R746	1-211-985-11	s	RESISTOR,CHIP 47 1/10W (1608)
R747	1-211-985-11	s	RESISTOR,CHIP 47 1/10W (1608)
R750	1-211-985-11	s	RESISTOR,CHIP 47 1/10W (1608)
R753	1-211-985-11	s	RESISTOR,CHIP 47 1/10W (1608)
R754	1-211-985-11	s	RESISTOR,CHIP 47 1/10W (1608)
R755	1-211-985-11	s	RESISTOR,CHIP 47 1/10W (1608)
R756	1-218-847-11	s	RESISTOR, CHIP 1K 1/10W (1608)
R757	1-218-847-11	s	RESISTOR, CHIP 1K 1/10W (1608)
R758	1-218-847-11	s	RESISTOR, CHIP 1K 1/10W (1608)
R759	1-211-977-11	s	RESISTOR,CHIP 22 1/10W (1608)
R760	1-211-977-11	s	RESISTOR,CHIP 22 1/10W (1608)
R761	1-211-977-11	s	RESISTOR,CHIP 22 1/10W (1608)
R762	1-211-977-11	s	RESISTOR,CHIP 22 1/10W (1608)
R763	1-211-977-11	s	RESISTOR,CHIP 22 1/10W (1608)
R764	1-211-977-11	s	RESISTOR,CHIP 22 1/10W (1608)
R765	1-211-977-11	s	RESISTOR,CHIP 22 1/10W (1608)
R766	1-211-977-11	s	RESISTOR,CHIP 22 1/10W (1608)
R767	1-211-977-11	s	RESISTOR,CHIP 22 1/10W (1608)
R768	1-211-977-11	s	RESISTOR,CHIP 22 1/10W (1608)
R770	1-218-895-11	s	RESISTOR,CHIP 100K 1/10W(1608)
R771	1-218-847-11	s	RESISTOR, CHIP 1K 1/10W (1608)
R772	1-218-871-11	s	RESISTOR,CHIP 10K 1/10W (1608)
R773	1-211-985-11	s	RESISTOR,CHIP 47 1/10W (1608)
R774	1-211-985-11	s	RESISTOR,CHIP 47 1/10W (1608)
R775	1-218-895-11	s	RESISTOR,CHIP 100K 1/10W(1608)
R776	1-211-969-11	s	RESISTOR,CHIP 10 1/10W (1608)
R777	1-211-969-11	s	RESISTOR,CHIP 10 1/10W (1608)
R778	1-211-969-11	s	RESISTOR,CHIP 10 1/10W (1608)
R779	1-218-863-11	s	RESISTOR,CHIP 4.7K 1/10W(1608)
R780	1-211-969-11	s	RESISTOR,CHIP 10 1/10W (1608)
R781	1-218-863-11	s	RESISTOR,CHIP 4.7K 1/10W(1608)
R782	1-216-864-11	s	CONDUCTOR, CHIP (1608)
R786	1-218-847-11	s	RESISTOR, CHIP 1K 1/10W (1608)
R787	1-218-847-11	s	RESISTOR, CHIP 1K 1/10W (1608)
R788	1-218-847-11	s	RESISTOR, CHIP 1K 1/10W (1608)
R789	1-218-847-11	s	RESISTOR, CHIP 1K 1/10W (1608)
R790	1-218-831-11	s	RESISTOR, CHIP 220 1/10W(1608)
R792	1-211-977-11	s	RESISTOR,CHIP 22 1/10W (1608)
R793	1-211-977-11	s	RESISTOR,CHIP 22 1/10W (1608)
R795	1-218-863-11	s	RESISTOR,CHIP 4.7K 1/10W(1608)
R796	1-218-863-11	s	RESISTOR,CHIP 4.7K 1/10W(1608)
R798	1-211-977-11	s	RESISTOR,CHIP 22 1/10W (1608)
R799	1-211-977-11	s	RESISTOR,CHIP 22 1/10W (1608)
R800	1-218-847-11	s	RESISTOR, CHIP 1K 1/10W (1608)
R801	1-218-847-11	s	RESISTOR, CHIP 1K 1/10W (1608)
R802	1-216-864-11	s	CONDUCTOR, CHIP (1608)
R803	1-216-864-11	s	CONDUCTOR, CHIP (1608)
R804	1-216-864-11	s	CONDUCTOR, CHIP (1608)
R805	1-218-847-11	s	RESISTOR, CHIP 1K 1/10W (1608)
R806	1-218-847-11	s	RESISTOR, CHIP 1K 1/10W (1608)
R807	1-218-847-11	s	RESISTOR, CHIP 1K 1/10W (1608)
R808	1-218-847-11	s	RESISTOR, CHIP 1K 1/10W (1608)
R809	1-218-847-11	s	RESISTOR, CHIP 1K 1/10W (1608)
R810	1-218-847-11	s	RESISTOR, CHIP 1K 1/10W (1608)
R811	1-211-985-11	s	RESISTOR,CHIP 47 1/10W (1608)
R812	1-218-847-11	s	RESISTOR, CHIP 1K 1/10W (1608)
R813	1-211-977-11	s	RESISTOR,CHIP 22 1/10W (1608)

(HIF-1 BOARD [SUFFIX 22, 23] for HDW RECORDER)

Ref. No. or Q'ty	Part No.	SP	Description
R814	1-218-839-11	s	RESISTOR,CHIP 470 1/10W (1608)
R815	1-218-839-11	s	RESISTOR,CHIP 470 1/10W (1608)
R816	1-218-847-11	s	RESISTOR, CHIP 1K 1/10W (1608)
R817	1-218-832-11	s	RESISTOR,CHIP 240 1/10W (1608)
R818	1-218-856-11	s	RESISTOR,CHIP 2.4K 1/10W(1608)
R819	1-218-847-11	s	RESISTOR, CHIP 1K 1/10W (1608)
R820	1-218-827-11	s	RESISTOR,CHIP 150 1/10W (1608)
R821	1-218-827-11	s	RESISTOR,CHIP 150 1/10W (1608)
R824	1-218-879-11	s	RESISTOR,CHIP 22K 1/10W (1608)
R825	1-218-855-11	s	RESISTOR,CHIP 2.2K 1/10W(1608)
R826	1-218-865-11	s	RESISTOR,CHIP 5.6K 1/10W(1608)
R827	1-218-871-11	s	RESISTOR,CHIP 10K 1/10W (1608)
R828	1-216-863-11	s	RESISTOR,CHIP 3.3M 1/16W 1608
R829	1-218-827-11	s	RESISTOR,CHIP 150 1/10W (1608)
R830	1-218-827-11	s	RESISTOR,CHIP 150 1/10W (1608)
R831	1-218-855-11	s	RESISTOR,CHIP 2.2K 1/10W(1608)
R832	1-218-847-11	s	RESISTOR, CHIP 1K 1/10W (1608)
R833	1-218-847-11	s	RESISTOR, CHIP 1K 1/10W (1608)
R834	1-218-823-11	s	RESISTOR,CHIP 100 1/10W (1608)
R835	1-218-859-11	s	RESISTOR,CHIP 3.3K 1/10W(1608)
R836	1-218-823-11	s	RESISTOR,CHIP 100 1/10W (1608)
R837	1-218-855-11	s	RESISTOR,CHIP 2.2K 1/10W(1608)
R838	1-218-823-11	s	RESISTOR,CHIP 100 1/10W (1608)
R839	1-218-863-11	s	RESISTOR,CHIP 4.7K 1/10W(1608)
R840	1-218-858-11	s	RESISTOR, CHIP 3K 1/10W (1608)
R841	1-218-847-11	s	RESISTOR, CHIP 1K 1/10W (1608)
R842	1-218-847-11	s	RESISTOR, CHIP 1K 1/10W (1608)
R843	1-218-847-11	s	RESISTOR, CHIP 1K 1/10W (1608)
R844	1-218-847-11	s	RESISTOR, CHIP 1K 1/10W (1608)
R845	1-216-864-11	s	CONDUCTOR, CHIP (1608)
R847	1-218-895-11	s	RESISTOR,CHIP 100K 1/10W(1608)
R848	1-218-895-11	s	RESISTOR,CHIP 100K 1/10W(1608)
R849	1-218-895-11	s	RESISTOR,CHIP 100K 1/10W(1608)
R850	1-218-871-11	s	RESISTOR,CHIP 10K 1/10W (1608)
R851	1-218-871-11	s	RESISTOR,CHIP 10K 1/10W (1608)
R852	1-218-871-11	s	RESISTOR,CHIP 10K 1/10W (1608)
R853	1-218-903-11	s	RESISTOR,CHIP 220K 1/10W(1608)
R854	1-218-871-11	s	RESISTOR,CHIP 10K 1/10W (1608)
R855	1-218-871-11	s	RESISTOR,CHIP 10K 1/10W (1608)
R857	1-218-871-11	s	RESISTOR,CHIP 10K 1/10W (1608)
R858	1-218-871-11	s	RESISTOR,CHIP 10K 1/10W (1608)
R859	1-218-831-11	s	RESISTOR, CHIP 220 1/10W(1608)
R860	1-218-839-11	s	RESISTOR,CHIP 470 1/10W (1608)
R861	1-218-839-11	s	RESISTOR,CHIP 470 1/10W (1608)
R862	1-211-985-11	s	RESISTOR,CHIP 47 1/10W (1608)
R863	1-211-985-11	s	RESISTOR,CHIP 47 1/10W (1608)
R864	1-211-985-11	s	RESISTOR,CHIP 47 1/10W (1608)
R865	1-211-985-11	s	RESISTOR,CHIP 47 1/10W (1608)
R866	1-211-985-11	s	RESISTOR,CHIP 47 1/10W (1608)
R867	1-211-985-11	s	RESISTOR,CHIP 47 1/10W (1608)
R868	1-211-985-11	s	RESISTOR,CHIP 47 1/10W (1608)
R869	1-211-985-11	s	RESISTOR,CHIP 47 1/10W (1608)
R900	1-218-895-11	s	RESISTOR,CHIP 100K 1/10W(1608)
R901	1-218-823-11	s	RESISTOR,CHIP 100 1/10W (1608)
R902	1-216-864-11	s	CONDUCTOR, CHIP (1608)
R904	1-216-864-11	s	CONDUCTOR, CHIP (1608)
R905	1-216-864-11	s	CONDUCTOR, CHIP (1608)
R906	1-216-864-11	s	CONDUCTOR, CHIP (1608)
R907	1-216-864-11	s	CONDUCTOR, CHIP (1608)

(HIF-1 BOARD [SUFFIX 22, 23] for HDW RECORDER)

Ref. No. or Q'ty	Part No.	SP	Description
R908	1-218-863-11	s	RESISTOR,CHIP 4.7K 1/10W(1608)
R909	1-218-863-11	s	RESISTOR,CHIP 4.7K 1/10W(1608)
R910	1-218-895-11	s	RESISTOR,CHIP 100K 1/10W(1608)
R911	1-218-895-11	s	RESISTOR,CHIP 100K 1/10W(1608)
R912	1-218-895-11	s	RESISTOR,CHIP 100K 1/10W(1608)
R913	1-211-985-11	s	RESISTOR,CHIP 47 1/10W (1608)
R915	1-218-895-11	s	RESISTOR,CHIP 100K 1/10W(1608)
R916	1-218-895-11	s	RESISTOR,CHIP 100K 1/10W(1608)
R917	1-211-985-11	s	RESISTOR,CHIP 47 1/10W (1608)
R918	1-211-985-11	s	RESISTOR,CHIP 47 1/10W (1608)
R921 *2	1-216-864-11	s	CONDUCTOR, CHIP (1608)
R925	1-216-864-11	s	CONDUCTOR, CHIP (1608)
R926	1-216-864-11	s	CONDUCTOR, CHIP (1608)
R927	1-218-895-11	s	RESISTOR,CHIP 100K 1/10W(1608)
R928	1-211-985-11	s	RESISTOR,CHIP 47 1/10W (1608)
R930	1-218-863-11	s	RESISTOR,CHIP 4.7K 1/10W(1608)
R931	1-218-863-11	s	RESISTOR,CHIP 4.7K 1/10W(1608)
R932	1-218-895-11	s	RESISTOR,CHIP 100K 1/10W(1608)
R933	1-218-895-11	s	RESISTOR,CHIP 100K 1/10W(1608)
R934	1-216-864-11	s	CONDUCTOR, CHIP (1608)
R936	1-211-985-11	s	RESISTOR,CHIP 47 1/10W (1608)
R940	1-216-864-11	s	CONDUCTOR, CHIP (1608)
R942	1-211-985-11	s	RESISTOR,CHIP 47 1/10W (1608)
R943	1-211-985-11	s	RESISTOR,CHIP 47 1/10W (1608)
R944	1-218-895-11	s	RESISTOR,CHIP 100K 1/10W(1608)
R945	1-211-985-11	s	RESISTOR,CHIP 47 1/10W (1608)
R946	1-211-985-11	s	RESISTOR,CHIP 47 1/10W (1608)
R947	1-211-985-11	s	RESISTOR,CHIP 47 1/10W (1608)
R948	1-211-985-11	s	RESISTOR,CHIP 47 1/10W (1608)
R949	1-211-985-11	s	RESISTOR,CHIP 47 1/10W (1608)
R950	1-211-985-11	s	RESISTOR,CHIP 47 1/10W (1608)
R951	1-211-985-11	s	RESISTOR,CHIP 47 1/10W (1608)
R952	1-211-985-11	s	RESISTOR,CHIP 47 1/10W (1608)
R953	1-218-823-11	s	RESISTOR,CHIP 100 1/10W (1608)
R954	1-218-823-11	s	RESISTOR,CHIP 100 1/10W (1608)
R955	1-211-985-11	s	RESISTOR,CHIP 47 1/10W (1608)
R956	1-211-985-11	s	RESISTOR,CHIP 47 1/10W (1608)
R957	1-211-985-11	s	RESISTOR,CHIP 47 1/10W (1608)
R958	1-211-985-11	s	RESISTOR,CHIP 47 1/10W (1608)
R959	1-211-985-11	s	RESISTOR,CHIP 47 1/10W (1608)
R960	1-211-985-11	s	RESISTOR,CHIP 47 1/10W (1608)
R961	1-211-985-11	s	RESISTOR,CHIP 47 1/10W (1608)
R962	1-211-985-11	s	RESISTOR,CHIP 47 1/10W (1608)
R963	1-211-985-11	s	RESISTOR,CHIP 47 1/10W (1608)
R964	1-211-985-11	s	RESISTOR,CHIP 47 1/10W (1608)
R965	1-211-985-11	s	RESISTOR,CHIP 47 1/10W (1608)
R1000	1-219-610-11	s	RESISTOR, (SQUARE TYPE) 0.022
R1003	1-211-969-11	s	RESISTOR,CHIP 10 1/10W (1608)
R1004	1-211-969-11	s	RESISTOR,CHIP 10 1/10W (1608)
R1005	1-218-880-11	s	RESISTOR,CHIP 24K 1/10W (1608)
R1006	1-218-877-11	s	RESISTOR,CHIP 18K 1/10W (1608)
R1009	1-218-863-11	s	RESISTOR,CHIP 4.7K 1/10W(1608)
R1016	1-218-823-11	s	RESISTOR,CHIP 100 1/10W (1608)
R1021	1-218-863-11	s	RESISTOR,CHIP 4.7K 1/10W(1608)
R1022 *2	1-218-871-11	s	RESISTOR,CHIP 10K 1/10W (1608)
*1	1-218-870-11	s	RESISTOR,CHIP 9.1K 1/10W(1608)
R1023	1-218-871-11	s	RESISTOR,CHIP 10K 1/10W (1608)
R1026	1-211-969-11	s	RESISTOR,CHIP 10 1/10W (1608)
R1027	1-211-969-11	s	RESISTOR,CHIP 10 1/10W (1608)

(HIF-1 BOARD [SUFFIX 22, 23] for HDW RECORDER)

Ref. No. or Q'ty	Part No.	SP	Description
R1028	1-219-610-11	s	RESISTOR, (SQUARE TYPE) 0.022
R1029	1-216-864-11	s	CONDUCTOR, CHIP (1608)
R1700	1-211-977-11	s	RESISTOR,CHIP 22 1/10W (1608)
R1701	1-211-977-11	s	RESISTOR,CHIP 22 1/10W (1608)
R1702	1-211-977-11	s	RESISTOR,CHIP 22 1/10W (1608)
R1703	1-211-977-11	s	RESISTOR,CHIP 22 1/10W (1608)
R1704	1-211-977-11	s	RESISTOR,CHIP 22 1/10W (1608)
R1705	1-211-977-11	s	RESISTOR,CHIP 22 1/10W (1608)
R1708	1-211-977-11	s	RESISTOR,CHIP 22 1/10W (1608)
R1709	1-211-977-11	s	RESISTOR,CHIP 22 1/10W (1608)
R1710	1-211-977-11	s	RESISTOR,CHIP 22 1/10W (1608)
R1711	1-211-977-11	s	RESISTOR,CHIP 22 1/10W (1608)
R1712	1-211-977-11	s	RESISTOR,CHIP 22 1/10W (1608)
R1713	1-211-977-11	s	RESISTOR,CHIP 22 1/10W (1608)
R1714	1-211-977-11	s	RESISTOR,CHIP 22 1/10W (1608)
R1715	1-211-977-11	s	RESISTOR,CHIP 22 1/10W (1608)
R1716	1-211-977-11	s	RESISTOR,CHIP 22 1/10W (1608)
R1717	1-211-977-11	s	RESISTOR,CHIP 22 1/10W (1608)
R1718	1-211-985-11	s	RESISTOR,CHIP 47 1/10W (1608)
R1719 *2	1-211-985-11	s	RESISTOR,CHIP 47 1/10W (1608)
R1720	1-211-985-11	s	RESISTOR,CHIP 47 1/10W (1608)
R1721	1-211-985-11	s	RESISTOR,CHIP 47 1/10W (1608)
R1722	1-211-985-11	s	RESISTOR,CHIP 47 1/10W (1608)
R1723	1-211-985-11	s	RESISTOR,CHIP 47 1/10W (1608)
R1729	1-211-977-11	s	RESISTOR,CHIP 22 1/10W (1608)
R1738	1-218-831-11	s	RESISTOR, CHIP 220 1/10W(1608)
RB50	1-233-412-11	s	RESISTOR,CHIP NETWORK 1K
RB51	1-233-412-11	s	RESISTOR,CHIP NETWORK 1K
RB52	1-239-409-11	s	RESISTOR NETWORK 47 (1608)
RB53	1-239-409-11	s	RESISTOR NETWORK 47 (1608)
RB100	1-233-575-11	s	RES, CHIP NETWORK 22
RB101	1-233-575-11	s	RES, CHIP NETWORK 22
RB102	1-233-575-11	s	RES, CHIP NETWORK 22
RB103	1-233-575-11	s	RES, CHIP NETWORK 22
RB104	1-233-575-11	s	RES, CHIP NETWORK 22
RB105	1-233-575-11	s	RES, CHIP NETWORK 22
RB106	1-239-409-11	s	RESISTOR NETWORK 47 (1608)
RB107	1-239-409-11	s	RESISTOR NETWORK 47 (1608)
RB108	1-239-409-11	s	RESISTOR NETWORK 47 (1608)
RB109	1-239-409-11	s	RESISTOR NETWORK 47 (1608)
RB110	1-239-409-11	s	RESISTOR NETWORK 47 (1608)
RB111	1-239-409-11	s	RESISTOR NETWORK 47 (1608)
RB112	1-239-409-11	s	RESISTOR NETWORK 47 (1608)
RB113	1-239-409-11	s	RESISTOR NETWORK 47 (1608)
RB114	1-239-409-11	s	RESISTOR NETWORK 47 (1608)
RB115	1-239-409-11	s	RESISTOR NETWORK 47 (1608)
RB116	1-239-409-11	s	RESISTOR NETWORK 47 (1608)
RB117	1-239-409-11	s	RESISTOR NETWORK 47 (1608)
RB118	1-239-409-11	s	RESISTOR NETWORK 47 (1608)
RB119	1-233-411-11	s	RESISTOR,CHIP NETWORK 220/3216
RB120	1-233-411-11	s	RESISTOR,CHIP NETWORK 220/3216
RB121	1-233-411-11	s	RESISTOR,CHIP NETWORK 220/3216
RB122	1-233-411-11	s	RESISTOR,CHIP NETWORK 220/3216
RB123	1-233-411-11	s	RESISTOR,CHIP NETWORK 220/3216
RB124	1-233-411-11	s	RESISTOR,CHIP NETWORK 220/3216
RB125	1-239-409-11	s	RESISTOR NETWORK 47 (1608)
RB126	1-239-409-11	s	RESISTOR NETWORK 47 (1608)
RB127	1-239-409-11	s	RESISTOR NETWORK 47 (1608)

(HIF-1 BOARD [SUFFIX 22, 23] for HDW RECORDER)

Ref. No. or Q'ty	Part No.	SP	Description
RB128	1-239-409-11	s	RESISTOR NETWORK 47 (1608)
RB129	1-239-409-11	s	RESISTOR NETWORK 47 (1608)
RB130	1-239-409-11	s	RESISTOR NETWORK 47 (1608)
RB200	1-239-409-11	s	RESISTOR NETWORK 47 (1608)
RB201	1-239-409-11	s	RESISTOR NETWORK 47 (1608)
RB202	1-239-409-11	s	RESISTOR NETWORK 47 (1608)
RB203	1-239-409-11	s	RESISTOR NETWORK 47 (1608)
RB204	1-239-409-11	s	RESISTOR NETWORK 47 (1608)
RB205	1-239-409-11	s	RESISTOR NETWORK 47 (1608)
RB206	1-239-409-11	s	RESISTOR NETWORK 47 (1608)
RB207	1-239-409-11	s	RESISTOR NETWORK 47 (1608)
RB208	1-239-409-11	s	RESISTOR NETWORK 47 (1608)
RB209	1-239-409-11	s	RESISTOR NETWORK 47 (1608)
RB210	1-239-409-11	s	RESISTOR NETWORK 47 (1608)
RB211	1-239-409-11	s	RESISTOR NETWORK 47 (1608)
RB212	1-239-409-11	s	RESISTOR NETWORK 47 (1608)
RB213	1-239-409-11	s	RESISTOR NETWORK 47 (1608)
RB214	1-239-409-11	s	RESISTOR NETWORK 47 (1608)
RB215	1-239-409-11	s	RESISTOR NETWORK 47 (1608)
RB216	1-239-409-11	s	RESISTOR NETWORK 47 (1608)
RB217	1-239-409-11	s	RESISTOR NETWORK 47 (1608)
RB218	1-239-409-11	s	RESISTOR NETWORK 47 (1608)
RB219	1-239-409-11	s	RESISTOR NETWORK 47 (1608)
RB220	1-239-409-11	s	RESISTOR NETWORK 47 (1608)
RB221	1-239-409-11	s	RESISTOR NETWORK 47 (1608)
RB222	1-239-409-11	s	RESISTOR NETWORK 47 (1608)
RB223	1-239-409-11	s	RESISTOR NETWORK 47 (1608)
RB224	1-236-908-11	s	RESISTOR,NETWORK 10K (3216)
RB300	1-239-409-11	s	RESISTOR NETWORK 47 (1608)
RB301	1-239-409-11	s	RESISTOR NETWORK 47 (1608)
RB302	1-239-409-11	s	RESISTOR NETWORK 47 (1608)
RB303	1-239-409-11	s	RESISTOR NETWORK 47 (1608)
RB304	1-239-409-11	s	RESISTOR NETWORK 47 (1608)
RB309	1-239-409-11	s	RESISTOR NETWORK 47 (1608)
RB400	1-233-575-11	s	RES, CHIP NETWORK 22
RB401	1-233-575-11	s	RES, CHIP NETWORK 22
RB402	1-233-575-11	s	RES, CHIP NETWORK 22
RB403	1-233-575-11	s	RES, CHIP NETWORK 22
RB404	1-233-575-11	s	RES, CHIP NETWORK 22
RB410	1-233-575-11	s	RES, CHIP NETWORK 22
RB411	1-233-575-11	s	RES, CHIP NETWORK 22
RB412	1-233-575-11	s	RES, CHIP NETWORK 22
RB413	1-233-575-11	s	RES, CHIP NETWORK 22
RB414	1-233-575-11	s	RES, CHIP NETWORK 22
RB415	1-239-409-11	s	RESISTOR NETWORK 47 (1608)
RB416	1-239-409-11	s	RESISTOR NETWORK 47 (1608)
RB417	1-239-409-11	s	RESISTOR NETWORK 47 (1608)
RB418	1-239-409-11	s	RESISTOR NETWORK 47 (1608)
RB419	1-239-409-11	s	RESISTOR NETWORK 47 (1608)
RB500	1-239-409-11	s	RESISTOR NETWORK 47 (1608)
RB501	1-239-409-11	s	RESISTOR NETWORK 47 (1608)
RB502	1-239-409-11	s	RESISTOR NETWORK 47 (1608)
RB503	1-239-409-11	s	RESISTOR NETWORK 47 (1608)
RB504	1-239-409-11	s	RESISTOR NETWORK 47 (1608)
RB505	1-233-575-11	s	RES, CHIP NETWORK 22
RB506	1-233-575-11	s	RES, CHIP NETWORK 22
RB507	1-233-575-11	s	RES, CHIP NETWORK 22
RB508	1-233-575-11	s	RES, CHIP NETWORK 22
RB509	1-233-575-11	s	RES, CHIP NETWORK 22

(HIF-1 BOARD [SUFFIX 22, 23] for HDW RECORDER)

Ref. No. or Q'ty	Part No.	SP	Description
RB510	1-233-575-11	s	RES, CHIP NETWORK 22
RB511	1-233-575-11	s	RES, CHIP NETWORK 22
RB512	1-233-575-11	s	RES, CHIP NETWORK 22
RB513	1-233-575-11	s	RES, CHIP NETWORK 22
RB514	1-233-575-11	s	RES, CHIP NETWORK 22
RB515	1-233-575-11	s	RES, CHIP NETWORK 22
RB516	1-233-575-11	s	RES, CHIP NETWORK 22
RB600	1-239-409-11	s	RESISTOR NETWORK 47 (1608)
RB601	1-239-409-11	s	RESISTOR NETWORK 47 (1608)
RB602	1-239-409-11	s	RESISTOR NETWORK 47 (1608)
RB603	1-239-409-11	s	RESISTOR NETWORK 47 (1608)
RB604	1-233-575-11	s	RES, CHIP NETWORK 22
RB605	1-233-575-11	s	RES, CHIP NETWORK 22
RB606	1-233-575-11	s	RES, CHIP NETWORK 22
RB607	1-233-575-11	s	RES, CHIP NETWORK 22
RB608	1-233-575-11	s	RES, CHIP NETWORK 22
RB609	1-233-575-11	s	RES, CHIP NETWORK 22
RB701	1-239-409-11	s	RESISTOR NETWORK 47 (1608)
RB702	1-239-409-11	s	RESISTOR NETWORK 47 (1608)
RB703	1-233-575-11	s	RES, CHIP NETWORK 22
RB704	1-233-575-11	s	RES, CHIP NETWORK 22
RB705	1-233-575-11	s	RES, CHIP NETWORK 22
RB706	1-233-575-11	s	RES, CHIP NETWORK 22
RB900	1-233-810-21	s	RES, NETWORK 100K (3216)
RB901	1-233-810-21	s	RES, NETWORK 100K (3216)
RB902	1-233-810-21	s	RES, NETWORK 100K (3216)
RB903	1-233-810-21	s	RES, NETWORK 100K (3216)
RB904	1-233-810-21	s	RES, NETWORK 100K (3216)
RB905	1-233-810-21	s	RES, NETWORK 100K (3216)
RB906	1-233-810-21	s	RES, NETWORK 100K (3216)
RB908	1-239-409-11	s	RESISTOR NETWORK 47 (1608)
RB909	1-239-409-11	s	RESISTOR NETWORK 47 (1608)
RB910	1-239-409-11	s	RESISTOR NETWORK 47 (1608)
RB911	1-239-409-11	s	RESISTOR NETWORK 47 (1608)
RB912	1-239-409-11	s	RESISTOR NETWORK 47 (1608)
RB913	1-239-409-11	s	RESISTOR NETWORK 47 (1608)
RB914	1-239-409-11	s	RESISTOR NETWORK 47 (1608)
RB918	1-233-414-11	s	RESISTOR,CHIP NETWORK 4.7K
RB919	1-233-414-11	s	RESISTOR,CHIP NETWORK 4.7K
RB920	1-233-414-11	s	RESISTOR,CHIP NETWORK 4.7K
RB921	1-233-414-11	s	RESISTOR,CHIP NETWORK 4.7K
RB922	1-233-810-21	s	RES, NETWORK 100K (3216)
RB923	1-233-810-21	s	RES, NETWORK 100K (3216)
RB924	1-233-810-21	s	RES, NETWORK 100K (3216)
RB925	1-233-414-11	s	RESISTOR,CHIP NETWORK 4.7K
RB926	1-233-414-11	s	RESISTOR,CHIP NETWORK 4.7K
RB927	1-239-409-11	s	RESISTOR NETWORK 47 (1608)
RB928	1-239-409-11	s	RESISTOR NETWORK 47 (1608)
RB929	1-239-409-11	s	RESISTOR NETWORK 47 (1608)
RB930	1-239-409-11	s	RESISTOR NETWORK 47 (1608)
RB931	1-233-810-21	s	RES, NETWORK 100K (3216)
RB932	1-239-409-11	s	RESISTOR NETWORK 47 (1608)
RB933	1-239-409-11	s	RESISTOR NETWORK 47 (1608)
RB934	1-239-409-11	s	RESISTOR NETWORK 47 (1608)
RB935	1-233-810-21	s	RES, NETWORK 100K (3216)
RB1100	1-233-575-11	s	RES, CHIP NETWORK 22
RB1101	1-233-575-11	s	RES, CHIP NETWORK 22
RB1102	1-233-575-11	s	RES, CHIP NETWORK 22
RB1103	1-233-575-11	s	RES, CHIP NETWORK 22

(HIF-1 BOARD [SUFFIX 22, 23] for HDW RECORDER)

Ref. No. or Q'ty	Part No.	SP	Description
RB1104	1-233-412-11	s	RESISTOR,CHIP NETWORK 1K
RB1105	1-233-412-11	s	RESISTOR,CHIP NETWORK 1K
RB1106	1-239-409-11	s	RESISTOR NETWORK 47 (1608)
RB1107	1-239-409-11	s	RESISTOR NETWORK 47 (1608)
RB1108	1-239-409-11	s	RESISTOR NETWORK 47 (1608)
RB1109	1-239-409-11	s	RESISTOR NETWORK 47 (1608)
RB1110	1-239-409-11	s	RESISTOR NETWORK 47 (1608)
RB1111	1-233-575-11	s	RES, CHIP NETWORK 22
RB1112	1-233-575-11	s	RES, CHIP NETWORK 22
RB1113	1-233-575-11	s	RES, CHIP NETWORK 22
RV800	1-241-261-41	s	RESISTOR, ADJ, CERMET 1K
RV801	1-241-261-41	s	RESISTOR, ADJ, CERMET 1K
S50	1-692-881-41	s	SWITCH, SLIDE
S900	1-692-270-41	s	SWITCH, SLIDE
X800	1-767-694-11	s	OSCILLATOR, CRYSTAL
X801	1-781-496-11	s	OSCILLATOR, CRYSTAL
X802	1-781-671-11	s	OSCILLATOR, CRYSTAL
X803	1-781-672-11	s	OSCILLATOR, CRYSTAL
X804	1-781-830-11	s	OSCILLATOR, CRYSTAL
X805	1-781-831-11	s	OSCILLATOR, CRYSTAL

HIF-1 BOARD [SUFFIX 24-] for HDW RECORDER

[Lot No. 3C1 -] HDW-2000, M2000/P
[Lot No. 4C2 -] HDW-D2000
[Lot No. 462 -] HDW-S2000/P

Ref. No. or Q'ty	Part No.	SP	Description
1pc	A-8327-055-D	s	MOUNTED CIRCUIT BOARD, HIF-1
1pc	3-629-706-03	o	COVER,SHIELD HIF
1pc	3-701-822-01	s	HOLDER, WIRE
2pcs	7-621-772-18	s	SCREW +B M2X4
6pcs	7-682-902-11	s	SCREW +PWH 2.6X5
1pc	3-179-084-21	s	LEVER (R), PC BOARD
1pc	3-179-085-21	s	LEVER (L), PC BOARD
1pc	3-629-707-02	o	CASE,SHIELD HIF
C100	1-107-826-11	s	CAPACITOR,CHIP CERAMIC 0.1MF
C101	1-107-826-11	s	CAPACITOR,CHIP CERAMIC 0.1MF
C102	1-107-826-11	s	CAPACITOR,CHIP CERAMIC 0.1MF
C103	1-107-826-11	s	CAPACITOR,CHIP CERAMIC 0.1MF
C104	1-107-826-11	s	CAPACITOR,CHIP CERAMIC 0.1MF
C105	1-107-826-11	s	CAPACITOR,CHIP CERAMIC 0.1MF
C106	1-107-826-11	s	CAPACITOR,CHIP CERAMIC 0.1MF
C107	1-107-826-11	s	CAPACITOR,CHIP CERAMIC 0.1MF
C108	1-107-826-11	s	CAPACITOR,CHIP CERAMIC 0.1MF
C109	1-107-826-11	s	CAPACITOR,CHIP CERAMIC 0.1MF
C110	1-107-826-11	s	CAPACITOR,CHIP CERAMIC 0.1MF
C111	1-107-826-11	s	CAPACITOR,CHIP CERAMIC 0.1MF
C112	1-107-826-11	s	CAPACITOR,CHIP CERAMIC 0.1MF
C113	1-107-826-11	s	CAPACITOR,CHIP CERAMIC 0.1MF
C114	1-107-826-11	s	CAPACITOR,CHIP CERAMIC 0.1MF
C200	1-107-826-11	s	CAPACITOR,CHIP CERAMIC 0.1MF
C201	1-107-826-11	s	CAPACITOR,CHIP CERAMIC 0.1MF
C202	1-107-826-11	s	CAPACITOR,CHIP CERAMIC 0.1MF
C203	1-107-826-11	s	CAPACITOR,CHIP CERAMIC 0.1MF
C204	1-107-826-11	s	CAPACITOR,CHIP CERAMIC 0.1MF
C205	1-107-826-11	s	CAPACITOR,CHIP CERAMIC 0.1MF
C206	1-127-692-11	s	CAP, CHIP CERAMIC 10MF B 3216
C207	1-107-826-11	s	CAPACITOR,CHIP CERAMIC 0.1MF
C208	1-107-826-11	s	CAPACITOR,CHIP CERAMIC 0.1MF
C209	1-107-826-11	s	CAPACITOR,CHIP CERAMIC 0.1MF
C210	1-107-826-11	s	CAPACITOR,CHIP CERAMIC 0.1MF
C211	1-127-692-11	s	CAP, CHIP CERAMIC 10MF B 3216
C212	1-107-826-11	s	CAPACITOR,CHIP CERAMIC 0.1MF
C213	1-107-826-11	s	CAPACITOR,CHIP CERAMIC 0.1MF
C214	1-107-826-11	s	CAPACITOR,CHIP CERAMIC 0.1MF
C215	1-107-826-11	s	CAPACITOR,CHIP CERAMIC 0.1MF
C216	1-107-826-11	s	CAPACITOR,CHIP CERAMIC 0.1MF
C217	1-107-826-11	s	CAPACITOR,CHIP CERAMIC 0.1MF
C218	1-107-826-11	s	CAPACITOR,CHIP CERAMIC 0.1MF
C219	1-107-826-11	s	CAPACITOR,CHIP CERAMIC 0.1MF
C220	1-107-826-11	s	CAPACITOR,CHIP CERAMIC 0.1MF
C221	1-107-826-11	s	CAPACITOR,CHIP CERAMIC 0.1MF
C222	1-107-826-11	s	CAPACITOR,CHIP CERAMIC 0.1MF
C223	1-107-826-11	s	CAPACITOR,CHIP CERAMIC 0.1MF
C226	1-127-692-11	s	CAP, CHIP CERAMIC 10MF B 3216
C227	1-125-889-11	s	CAPACITOR, CERAMIC 2.2MF
C228	1-125-889-11	s	CAPACITOR, CERAMIC 2.2MF
C229	1-107-826-11	s	CAPACITOR,CHIP CERAMIC 0.1MF
C232	1-127-692-11	s	CAP, CHIP CERAMIC 10MF B 3216
C233	1-127-692-11	s	CAP, CHIP CERAMIC 10MF B 3216
C234	1-127-692-11	s	CAP, CHIP CERAMIC 10MF B 3216
C235	1-127-692-11	s	CAP, CHIP CERAMIC 10MF B 3216
C300	1-107-826-11	s	CAPACITOR,CHIP CERAMIC 0.1MF

(HIF-1 BOARD [SUFFIX 24-] for HDW RECORDER)

Ref. No. or Q'ty	Part No.	SP	Description
C301	1-107-826-11	s	CAPACITOR,CHIP CERAMIC 0.1MF
C302	1-107-826-11	s	CAPACITOR,CHIP CERAMIC 0.1MF
C303	1-107-826-11	s	CAPACITOR,CHIP CERAMIC 0.1MF
C304	1-107-826-11	s	CAPACITOR,CHIP CERAMIC 0.1MF
C305	1-107-826-11	s	CAPACITOR,CHIP CERAMIC 0.1MF
C306	1-107-826-11	s	CAPACITOR,CHIP CERAMIC 0.1MF
C307	1-107-826-11	s	CAPACITOR,CHIP CERAMIC 0.1MF
C308	1-107-826-11	s	CAPACITOR,CHIP CERAMIC 0.1MF
C309	1-107-826-11	s	CAPACITOR,CHIP CERAMIC 0.1MF
C310	1-107-826-11	s	CAPACITOR,CHIP CERAMIC 0.1MF
C311	1-107-826-11	s	CAPACITOR,CHIP CERAMIC 0.1MF
C312	1-107-826-11	s	CAPACITOR,CHIP CERAMIC 0.1MF
C313	1-107-826-11	s	CAPACITOR,CHIP CERAMIC 0.1MF
C314	1-107-826-11	s	CAPACITOR,CHIP CERAMIC 0.1MF
C315	1-107-826-11	s	CAPACITOR,CHIP CERAMIC 0.1MF
C316	1-107-826-11	s	CAPACITOR,CHIP CERAMIC 0.1MF
C317	1-107-826-11	s	CAPACITOR,CHIP CERAMIC 0.1MF
C318	1-107-826-11	s	CAPACITOR,CHIP CERAMIC 0.1MF
C319	1-107-826-11	s	CAPACITOR,CHIP CERAMIC 0.1MF
C320	1-107-826-11	s	CAPACITOR,CHIP CERAMIC 0.1MF
C321	1-107-826-11	s	CAPACITOR,CHIP CERAMIC 0.1MF
C322	1-107-826-11	s	CAPACITOR,CHIP CERAMIC 0.1MF
C323	1-107-826-11	s	CAPACITOR,CHIP CERAMIC 0.1MF
C324	1-107-826-11	s	CAPACITOR,CHIP CERAMIC 0.1MF
C325	1-107-826-11	s	CAPACITOR,CHIP CERAMIC 0.1MF
C326	1-107-826-11	s	CAPACITOR,CHIP CERAMIC 0.1MF
C327	1-107-826-11	s	CAPACITOR,CHIP CERAMIC 0.1MF
C328	1-107-826-11	s	CAPACITOR,CHIP CERAMIC 0.1MF
C329	1-127-692-11	s	CAP, CHIP CERAMIC 10MF B 3216
C330	1-165-870-21	s	CAPACITOR, ELECT 100MF(6.3X6)
C331	1-107-826-11	s	CAPACITOR,CHIP CERAMIC 0.1MF
C332	1-107-826-11	s	CAPACITOR,CHIP CERAMIC 0.1MF
C333	1-107-826-11	s	CAPACITOR,CHIP CERAMIC 0.1MF
C334	1-107-826-11	s	CAPACITOR,CHIP CERAMIC 0.1MF
C335	1-107-826-11	s	CAPACITOR,CHIP CERAMIC 0.1MF
C336	1-107-826-11	s	CAPACITOR,CHIP CERAMIC 0.1MF
C337	1-107-826-11	s	CAPACITOR,CHIP CERAMIC 0.1MF
C338	1-107-826-11	s	CAPACITOR,CHIP CERAMIC 0.1MF
C339	1-107-826-11	s	CAPACITOR,CHIP CERAMIC 0.1MF
C340	1-107-826-11	s	CAPACITOR,CHIP CERAMIC 0.1MF
C341	1-107-826-11	s	CAPACITOR,CHIP CERAMIC 0.1MF
C342	1-107-826-11	s	CAPACITOR,CHIP CERAMIC 0.1MF
C343	1-107-826-11	s	CAPACITOR,CHIP CERAMIC 0.1MF
C344	1-107-826-11	s	CAPACITOR,CHIP CERAMIC 0.1MF
C345	1-107-826-11	s	CAPACITOR,CHIP CERAMIC 0.1MF
C346	1-107-826-11	s	CAPACITOR,CHIP CERAMIC 0.1MF
C347	1-107-826-11	s	CAPACITOR,CHIP CERAMIC 0.1MF
C348	1-164-227-11	s	CAPACITOR,CERAMIC 0.022MF/25V
C351	1-127-692-11	s	CAP, CHIP CERAMIC 10MF B 3216
C352	1-127-692-11	s	CAP, CHIP CERAMIC 10MF B 3216
C353	1-127-692-11	s	CAP, CHIP CERAMIC 10MF B 3216
C354	1-127-692-11	s	CAP, CHIP CERAMIC 10MF B 3216
C355	1-127-692-11	s	CAP, CHIP CERAMIC 10MF B 3216
C356	1-127-692-11	s	CAP, CHIP CERAMIC 10MF B 3216
C358	1-127-692-11	s	CAP, CHIP CERAMIC 10MF B 3216
C359	1-127-692-11	s	CAP, CHIP CERAMIC 10MF B 3216
C360	1-127-692-11	s	CAP, CHIP CERAMIC 10MF B 3216
C361	1-127-692-11	s	CAP, CHIP CERAMIC 10MF B 3216
C500	1-107-826-11	s	CAPACITOR,CHIP CERAMIC 0.1MF

(HIF-1 BOARD [SUFFIX 24-] for HDW RECORDER)

Ref. No. or Q'ty	Part No.	SP	Description
C501	1-107-826-11	s	CAPACITOR,CHIP CERAMIC 0.1MF
C502	1-107-826-11	s	CAPACITOR,CHIP CERAMIC 0.1MF
C503	1-107-826-11	s	CAPACITOR,CHIP CERAMIC 0.1MF
C504	1-107-826-11	s	CAPACITOR,CHIP CERAMIC 0.1MF
C505	1-107-826-11	s	CAPACITOR,CHIP CERAMIC 0.1MF
C506	1-107-826-11	s	CAPACITOR,CHIP CERAMIC 0.1MF
C507	1-107-826-11	s	CAPACITOR,CHIP CERAMIC 0.1MF
C508	1-107-826-11	s	CAPACITOR,CHIP CERAMIC 0.1MF
C509	1-107-826-11	s	CAPACITOR,CHIP CERAMIC 0.1MF
C510	1-107-826-11	s	CAPACITOR,CHIP CERAMIC 0.1MF
C511	1-127-692-11	s	CAP, CHIP CERAMIC 10MF B 3216
C512	1-127-692-11	s	CAP, CHIP CERAMIC 10MF B 3216
C513	1-107-826-11	s	CAPACITOR,CHIP CERAMIC 0.1MF
C514	1-107-826-11	s	CAPACITOR,CHIP CERAMIC 0.1MF
C515	1-107-826-11	s	CAPACITOR,CHIP CERAMIC 0.1MF
C516	1-107-826-11	s	CAPACITOR,CHIP CERAMIC 0.1MF
C517	1-107-826-11	s	CAPACITOR,CHIP CERAMIC 0.1MF
C518	1-107-826-11	s	CAPACITOR,CHIP CERAMIC 0.1MF
C519	1-107-826-11	s	CAPACITOR,CHIP CERAMIC 0.1MF
C520	1-107-826-11	s	CAPACITOR,CHIP CERAMIC 0.1MF
C521	1-107-826-11	s	CAPACITOR,CHIP CERAMIC 0.1MF
C522	1-107-826-11	s	CAPACITOR,CHIP CERAMIC 0.1MF
C523	1-107-826-11	s	CAPACITOR,CHIP CERAMIC 0.1MF
C524	1-107-826-11	s	CAPACITOR,CHIP CERAMIC 0.1MF
C525	1-107-826-11	s	CAPACITOR,CHIP CERAMIC 0.1MF
C526	1-107-826-11	s	CAPACITOR,CHIP CERAMIC 0.1MF
C527	1-107-826-11	s	CAPACITOR,CHIP CERAMIC 0.1MF
C528	1-107-826-11	s	CAPACITOR,CHIP CERAMIC 0.1MF
C529	1-107-826-11	s	CAPACITOR,CHIP CERAMIC 0.1MF
C530	1-107-826-11	s	CAPACITOR,CHIP CERAMIC 0.1MF
C531	1-107-826-11	s	CAPACITOR,CHIP CERAMIC 0.1MF
C532	1-107-826-11	s	CAPACITOR,CHIP CERAMIC 0.1MF
C533	1-107-826-11	s	CAPACITOR,CHIP CERAMIC 0.1MF
C534	1-107-826-11	s	CAPACITOR,CHIP CERAMIC 0.1MF
C535	1-107-826-11	s	CAPACITOR,CHIP CERAMIC 0.1MF
C536	1-107-826-11	s	CAPACITOR,CHIP CERAMIC 0.1MF
C537	1-107-826-11	s	CAPACITOR,CHIP CERAMIC 0.1MF
C538	1-127-692-11	s	CAP, CHIP CERAMIC 10MF B 3216
C539	1-127-692-11	s	CAP, CHIP CERAMIC 10MF B 3216
C540	1-107-826-11	s	CAPACITOR,CHIP CERAMIC 0.1MF
C541	1-107-826-11	s	CAPACITOR,CHIP CERAMIC 0.1MF
C542	1-107-826-11	s	CAPACITOR,CHIP CERAMIC 0.1MF
C543	1-107-826-11	s	CAPACITOR,CHIP CERAMIC 0.1MF
C544	1-107-826-11	s	CAPACITOR,CHIP CERAMIC 0.1MF
C545	1-107-826-11	s	CAPACITOR,CHIP CERAMIC 0.1MF
C546	1-107-826-11	s	CAPACITOR,CHIP CERAMIC 0.1MF
C547	1-107-826-11	s	CAPACITOR,CHIP CERAMIC 0.1MF
C548	1-107-826-11	s	CAPACITOR,CHIP CERAMIC 0.1MF
C549	1-107-826-11	s	CAPACITOR,CHIP CERAMIC 0.1MF
C550	1-107-826-11	s	CAPACITOR,CHIP CERAMIC 0.1MF
C551	1-107-826-11	s	CAPACITOR,CHIP CERAMIC 0.1MF
C552	1-107-826-11	s	CAPACITOR,CHIP CERAMIC 0.1MF
C553	1-107-826-11	s	CAPACITOR,CHIP CERAMIC 0.1MF
C554	1-127-692-11	s	CAP, CHIP CERAMIC 10MF B 3216
C555	1-127-692-11	s	CAP, CHIP CERAMIC 10MF B 3216
C556	1-127-692-11	s	CAP, CHIP CERAMIC 10MF B 3216
C557	1-127-692-11	s	CAP, CHIP CERAMIC 10MF B 3216
C558	1-127-692-11	s	CAP, CHIP CERAMIC 10MF B 3216
C559	1-127-692-11	s	CAP, CHIP CERAMIC 10MF B 3216

(HIF-1 BOARD [SUFFIX 24-] for HDW RECORDER)

Ref. No. or Q'ty	Part No.	SP	Description
C560	1-127-692-11	s	CAP, CHIP CERAMIC 10MF B 3216
C561	1-127-692-11	s	CAP, CHIP CERAMIC 10MF B 3216
C562	1-127-692-11	s	CAP, CHIP CERAMIC 10MF B 3216
C563	1-127-692-11	s	CAP, CHIP CERAMIC 10MF B 3216
C564	1-127-692-11	s	CAP, CHIP CERAMIC 10MF B 3216
C565	1-127-692-11	s	CAP, CHIP CERAMIC 10MF B 3216
C600	1-107-826-11	s	CAPACITOR,CHIP CERAMIC 0.1MF
C601	1-107-826-11	s	CAPACITOR,CHIP CERAMIC 0.1MF
C602	1-107-826-11	s	CAPACITOR,CHIP CERAMIC 0.1MF
C603	1-107-826-11	s	CAPACITOR,CHIP CERAMIC 0.1MF
C604	1-107-826-11	s	CAPACITOR,CHIP CERAMIC 0.1MF
C605	1-107-826-11	s	CAPACITOR,CHIP CERAMIC 0.1MF
C606	1-107-826-11	s	CAPACITOR,CHIP CERAMIC 0.1MF
C607	1-107-826-11	s	CAPACITOR,CHIP CERAMIC 0.1MF
C608	1-107-826-11	s	CAPACITOR,CHIP CERAMIC 0.1MF
C609	1-107-826-11	s	CAPACITOR,CHIP CERAMIC 0.1MF
C610	1-107-826-11	s	CAPACITOR,CHIP CERAMIC 0.1MF
C611	1-107-826-11	s	CAPACITOR,CHIP CERAMIC 0.1MF
C612	1-107-826-11	s	CAPACITOR,CHIP CERAMIC 0.1MF
C613	1-107-826-11	s	CAPACITOR,CHIP CERAMIC 0.1MF
C614	1-107-826-11	s	CAPACITOR,CHIP CERAMIC 0.1MF
C615	1-127-692-11	s	CAP, CHIP CERAMIC 10MF B 3216
C617	1-107-826-11	s	CAPACITOR,CHIP CERAMIC 0.1MF
C618	1-107-826-11	s	CAPACITOR,CHIP CERAMIC 0.1MF
C619	1-107-826-11	s	CAPACITOR,CHIP CERAMIC 0.1MF
C620	1-107-826-11	s	CAPACITOR,CHIP CERAMIC 0.1MF
C621	1-107-826-11	s	CAPACITOR,CHIP CERAMIC 0.1MF
C622	1-107-826-11	s	CAPACITOR,CHIP CERAMIC 0.1MF
C623	1-107-826-11	s	CAPACITOR,CHIP CERAMIC 0.1MF
C624	1-107-826-11	s	CAPACITOR,CHIP CERAMIC 0.1MF
C625	1-107-826-11	s	CAPACITOR,CHIP CERAMIC 0.1MF
C626	1-107-826-11	s	CAPACITOR,CHIP CERAMIC 0.1MF
C627	1-107-826-11	s	CAPACITOR,CHIP CERAMIC 0.1MF
C628	1-107-826-11	s	CAPACITOR,CHIP CERAMIC 0.1MF
C629	1-107-826-11	s	CAPACITOR,CHIP CERAMIC 0.1MF
C630	1-107-826-11	s	CAPACITOR,CHIP CERAMIC 0.1MF
C631	1-107-826-11	s	CAPACITOR,CHIP CERAMIC 0.1MF
C632	1-107-826-11	s	CAPACITOR,CHIP CERAMIC 0.1MF
C633	1-107-826-11	s	CAPACITOR,CHIP CERAMIC 0.1MF
C634	1-107-826-11	s	CAPACITOR,CHIP CERAMIC 0.1MF
C635	1-107-826-11	s	CAPACITOR,CHIP CERAMIC 0.1MF
C636	1-107-826-11	s	CAPACITOR,CHIP CERAMIC 0.1MF
C637	1-107-826-11	s	CAPACITOR,CHIP CERAMIC 0.1MF
C638	1-107-826-11	s	CAPACITOR,CHIP CERAMIC 0.1MF
C639	1-127-692-11	s	CAP, CHIP CERAMIC 10MF B 3216
C640	1-127-692-11	s	CAP, CHIP CERAMIC 10MF B 3216
C641	1-127-692-11	s	CAP, CHIP CERAMIC 10MF B 3216
C642	1-165-870-21	s	CAPACITOR, ELECT 100MF(6.3X6)
C646	1-127-692-11	s	CAP, CHIP CERAMIC 10MF B 3216
C700	1-107-826-11	s	CAPACITOR,CHIP CERAMIC 0.1MF
C701	1-107-826-11	s	CAPACITOR,CHIP CERAMIC 0.1MF
C702	1-107-826-11	s	CAPACITOR,CHIP CERAMIC 0.1MF
C704	1-107-826-11	s	CAPACITOR,CHIP CERAMIC 0.1MF
C705	1-107-826-11	s	CAPACITOR,CHIP CERAMIC 0.1MF
C706	1-107-826-11	s	CAPACITOR,CHIP CERAMIC 0.1MF
C707	1-107-826-11	s	CAPACITOR,CHIP CERAMIC 0.1MF
C708	1-127-692-11	s	CAP, CHIP CERAMIC 10MF B 3216
C709	1-107-826-11	s	CAPACITOR,CHIP CERAMIC 0.1MF
C710	1-107-826-11	s	CAPACITOR,CHIP CERAMIC 0.1MF

(HIF-1 BOARD [SUFFIX 24-] for HDW RECORDER)

Ref. No. or Q'ty	Part No.	SP	Description
C711	1-107-826-11	s	CAPACITOR,CHIP CERAMIC 0.1MF
C712	1-107-826-11	s	CAPACITOR,CHIP CERAMIC 0.1MF
C713	1-127-692-11	s	CAP, CHIP CERAMIC 10MF B 3216
C714	1-107-826-11	s	CAPACITOR,CHIP CERAMIC 0.1MF
C715	1-107-826-11	s	CAPACITOR,CHIP CERAMIC 0.1MF
C716	1-107-826-11	s	CAPACITOR,CHIP CERAMIC 0.1MF
C719	1-107-826-11	s	CAPACITOR,CHIP CERAMIC 0.1MF
C720	1-107-826-11	s	CAPACITOR,CHIP CERAMIC 0.1MF
C721	1-107-826-11	s	CAPACITOR,CHIP CERAMIC 0.1MF
C722	1-107-826-11	s	CAPACITOR,CHIP CERAMIC 0.1MF
C723	1-107-826-11	s	CAPACITOR,CHIP CERAMIC 0.1MF
C724	1-107-826-11	s	CAPACITOR,CHIP CERAMIC 0.1MF
C725	1-107-826-11	s	CAPACITOR,CHIP CERAMIC 0.1MF
C726	1-107-826-11	s	CAPACITOR,CHIP CERAMIC 0.1MF
C727	1-107-826-11	s	CAPACITOR,CHIP CERAMIC 0.1MF
C728	1-107-826-11	s	CAPACITOR,CHIP CERAMIC 0.1MF
C729	1-107-826-11	s	CAPACITOR,CHIP CERAMIC 0.1MF
C730	1-107-826-11	s	CAPACITOR,CHIP CERAMIC 0.1MF
C732	1-127-692-11	s	CAP, CHIP CERAMIC 10MF B 3216
C733	1-127-692-11	s	CAP, CHIP CERAMIC 10MF B 3216
C734	1-127-692-11	s	CAP, CHIP CERAMIC 10MF B 3216
C736	1-107-826-11	s	CAPACITOR,CHIP CERAMIC 0.1MF
C738	1-107-826-11	s	CAPACITOR,CHIP CERAMIC 0.1MF
C740	1-107-826-11	s	CAPACITOR,CHIP CERAMIC 0.1MF
C741	1-107-826-11	s	CAPACITOR,CHIP CERAMIC 0.1MF
C743	1-107-826-11	s	CAPACITOR,CHIP CERAMIC 0.1MF
C746	1-162-970-11	s	CAPACITOR CERAMIC 0.01MF/25V B
C747	1-107-826-11	s	CAPACITOR,CHIP CERAMIC 0.1MF
C800	1-165-870-21	s	CAPACITOR, ELECT 100MF(6.3X6)
C801	1-165-870-21	s	CAPACITOR, ELECT 100MF(6.3X6)
C802	1-107-826-11	s	CAPACITOR,CHIP CERAMIC 0.1MF
C803	1-107-826-11	s	CAPACITOR,CHIP CERAMIC 0.1MF
C804	1-107-826-11	s	CAPACITOR,CHIP CERAMIC 0.1MF
C805	1-107-826-11	s	CAPACITOR,CHIP CERAMIC 0.1MF
C806	1-107-826-11	s	CAPACITOR,CHIP CERAMIC 0.1MF
C807	1-107-826-11	s	CAPACITOR,CHIP CERAMIC 0.1MF
C808	1-107-826-11	s	CAPACITOR,CHIP CERAMIC 0.1MF
C809	1-107-826-11	s	CAPACITOR,CHIP CERAMIC 0.1MF
C810	1-107-826-11	s	CAPACITOR,CHIP CERAMIC 0.1MF
C811	1-107-826-11	s	CAPACITOR,CHIP CERAMIC 0.1MF
C812	1-107-826-11	s	CAPACITOR,CHIP CERAMIC 0.1MF
C813	1-107-826-11	s	CAPACITOR,CHIP CERAMIC 0.1MF
C814	1-107-826-11	s	CAPACITOR,CHIP CERAMIC 0.1MF
C815	1-107-826-11	s	CAPACITOR,CHIP CERAMIC 0.1MF
C816	1-107-826-11	s	CAPACITOR,CHIP CERAMIC 0.1MF
C817	1-107-826-11	s	CAPACITOR,CHIP CERAMIC 0.1MF
C818	1-107-826-11	s	CAPACITOR,CHIP CERAMIC 0.1MF
C819	1-107-826-11	s	CAPACITOR,CHIP CERAMIC 0.1MF
C820	1-107-826-11	s	CAPACITOR,CHIP CERAMIC 0.1MF
C821	1-107-826-11	s	CAPACITOR,CHIP CERAMIC 0.1MF
C822	1-107-826-11	s	CAPACITOR,CHIP CERAMIC 0.1MF
C823	1-107-826-11	s	CAPACITOR,CHIP CERAMIC 0.1MF
C824	1-107-826-11	s	CAPACITOR,CHIP CERAMIC 0.1MF
C825	1-107-826-11	s	CAPACITOR,CHIP CERAMIC 0.1MF
C826	1-107-826-11	s	CAPACITOR,CHIP CERAMIC 0.1MF
C827	1-107-826-11	s	CAPACITOR,CHIP CERAMIC 0.1MF
C828	1-107-826-11	s	CAPACITOR,CHIP CERAMIC 0.1MF
C829	1-107-826-11	s	CAPACITOR,CHIP CERAMIC 0.1MF
C830	1-107-826-11	s	CAPACITOR,CHIP CERAMIC 0.1MF

(HIF-1 BOARD [SUFFIX 24-] for HDW RECORDER)

Ref. No. or Q'ty	Part No.	SP	Description
C831	1-107-826-11	s	CAPACITOR,CHIP CERAMIC 0.1MF
C832	1-107-826-11	s	CAPACITOR,CHIP CERAMIC 0.1MF
C833	1-107-826-11	s	CAPACITOR,CHIP CERAMIC 0.1MF
C834	1-107-826-11	s	CAPACITOR,CHIP CERAMIC 0.1MF
C835	1-107-826-11	s	CAPACITOR,CHIP CERAMIC 0.1MF
C836	1-107-826-11	s	CAPACITOR,CHIP CERAMIC 0.1MF
C837	1-107-826-11	s	CAPACITOR,CHIP CERAMIC 0.1MF
C838	1-162-919-11	s	CAPACITOR,CERAMIC 22PF/50V CH
C839	1-162-928-11	s	CAPACITOR,CERAMIC 120PF/50V CH
C840	1-107-826-11	s	CAPACITOR,CHIP CERAMIC 0.1MF
C841	1-107-826-11	s	CAPACITOR,CHIP CERAMIC 0.1MF
C842	1-107-826-11	s	CAPACITOR,CHIP CERAMIC 0.1MF
C843	1-125-891-11	s	CAPACITOR CERAMIC 0.47MF/10V
C844	1-125-891-11	s	CAPACITOR CERAMIC 0.47MF/10V
C845	1-107-826-11	s	CAPACITOR,CHIP CERAMIC 0.1MF
C846	1-107-826-11	s	CAPACITOR,CHIP CERAMIC 0.1MF
C847	1-107-826-11	s	CAPACITOR,CHIP CERAMIC 0.1MF
C848	1-162-923-11	s	CAPACITOR,CERAMIC 47PF/50V CH
C849	1-162-970-11	s	CAPACITOR CERAMIC 0.01MF/25V B
C850	1-107-826-11	s	CAPACITOR,CHIP CERAMIC 0.1MF
C851	1-162-928-11	s	CAPACITOR,CERAMIC 120PF/50V CH
C852	1-107-826-11	s	CAPACITOR,CHIP CERAMIC 0.1MF
C853	1-162-927-11	s	CAPACITOR,CERAMIC 100PF/50V CH
C854	1-107-826-11	s	CAPACITOR,CHIP CERAMIC 0.1MF
C855	1-162-923-11	s	CAPACITOR,CERAMIC 47PF/50V CH
C856	1-107-826-11	s	CAPACITOR,CHIP CERAMIC 0.1MF
C857	1-107-826-11	s	CAPACITOR,CHIP CERAMIC 0.1MF
C858	1-162-924-11	s	CAPACITOR,CERAMIC 56PF/50V CH
C859	1-107-826-11	s	CAPACITOR,CHIP CERAMIC 0.1MF
C860	1-107-826-11	s	CAPACITOR,CHIP CERAMIC 0.1MF
C861	1-107-826-11	s	CAPACITOR,CHIP CERAMIC 0.1MF
C862	1-162-928-11	s	CAPACITOR,CERAMIC 120PF/50V CH
C863	1-107-826-11	s	CAPACITOR,CHIP CERAMIC 0.1MF
C864	1-162-928-11	s	CAPACITOR,CERAMIC 120PF/50V CH
C865	1-127-950-11	s	CAPACITOR,CHIP FILM 0.01MF
C866	1-127-950-11	s	CAPACITOR,CHIP FILM 0.01MF
C867	1-127-950-11	s	CAPACITOR,CHIP FILM 0.01MF
C868	1-127-956-11	s	CAPACITOR,CHIP FILM 0.1MF
C869	1-127-956-11	s	CAPACITOR,CHIP FILM 0.1MF
C870	1-127-956-11	s	CAPACITOR,CHIP FILM 0.1MF
C871	1-127-950-11	s	CAPACITOR,CHIP FILM 0.01MF
C872	1-127-956-11	s	CAPACITOR,CHIP FILM 0.1MF
C873	1-107-826-11	s	CAPACITOR,CHIP CERAMIC 0.1MF
C874	1-107-826-11	s	CAPACITOR,CHIP CERAMIC 0.1MF
C875	1-107-826-11	s	CAPACITOR,CHIP CERAMIC 0.1MF
C876	1-107-826-11	s	CAPACITOR,CHIP CERAMIC 0.1MF
C877	1-107-826-11	s	CAPACITOR,CHIP CERAMIC 0.1MF
C878	1-107-826-11	s	CAPACITOR,CHIP CERAMIC 0.1MF
C879	1-107-826-11	s	CAPACITOR,CHIP CERAMIC 0.1MF
C880	1-107-826-11	s	CAPACITOR,CHIP CERAMIC 0.1MF
C881	1-107-826-11	s	CAPACITOR,CHIP CERAMIC 0.1MF
C882	1-107-826-11	s	CAPACITOR,CHIP CERAMIC 0.1MF
C883	1-107-826-11	s	CAPACITOR,CHIP CERAMIC 0.1MF
C884	1-107-826-11	s	CAPACITOR,CHIP CERAMIC 0.1MF
C885	1-127-692-11	s	CAP, CHIP CERAMIC 10MF B 3216
C886	1-107-826-11	s	CAPACITOR,CHIP CERAMIC 0.1MF
C887	1-107-826-11	s	CAPACITOR,CHIP CERAMIC 0.1MF
C888	1-107-826-11	s	CAPACITOR,CHIP CERAMIC 0.1MF
C889	1-107-826-11	s	CAPACITOR,CHIP CERAMIC 0.1MF

(HIF-1 BOARD [SUFFIX 24-] for HDW RECORDER)

Ref. No. or Q'ty	Part No.	SP	Description
C890	1-107-826-11	s	CAPACITOR,CHIP CERAMIC 0.1MF
C891	1-107-826-11	s	CAPACITOR,CHIP CERAMIC 0.1MF
C892	1-107-826-11	s	CAPACITOR,CHIP CERAMIC 0.1MF
C893	1-107-826-11	s	CAPACITOR,CHIP CERAMIC 0.1MF
C894	1-107-826-11	s	CAPACITOR,CHIP CERAMIC 0.1MF
C895	1-107-826-11	s	CAPACITOR,CHIP CERAMIC 0.1MF
C896	1-107-826-11	s	CAPACITOR,CHIP CERAMIC 0.1MF
C897	1-107-826-11	s	CAPACITOR,CHIP CERAMIC 0.1MF
C898	1-107-826-11	s	CAPACITOR,CHIP CERAMIC 0.1MF
C899	1-107-826-11	s	CAPACITOR,CHIP CERAMIC 0.1MF
C900	1-162-970-11	s	CAPACITOR CERAMIC 0.01MF/25V B
C901	1-107-826-11	s	CAPACITOR,CHIP CERAMIC 0.1MF
C902	1-107-826-11	s	CAPACITOR,CHIP CERAMIC 0.1MF
C903	1-107-826-11	s	CAPACITOR,CHIP CERAMIC 0.1MF
C904	1-107-826-11	s	CAPACITOR,CHIP CERAMIC 0.1MF
C905	1-107-826-11	s	CAPACITOR,CHIP CERAMIC 0.1MF
C906	1-107-826-11	s	CAPACITOR,CHIP CERAMIC 0.1MF
C907	1-107-826-11	s	CAPACITOR,CHIP CERAMIC 0.1MF
C908	1-107-826-11	s	CAPACITOR,CHIP CERAMIC 0.1MF
C909	1-107-826-11	s	CAPACITOR,CHIP CERAMIC 0.1MF
C910	1-107-826-11	s	CAPACITOR,CHIP CERAMIC 0.1MF
C911	1-107-826-11	s	CAPACITOR,CHIP CERAMIC 0.1MF
C912	1-107-826-11	s	CAPACITOR,CHIP CERAMIC 0.1MF
C913	1-107-826-11	s	CAPACITOR,CHIP CERAMIC 0.1MF
C914	1-107-826-11	s	CAPACITOR,CHIP CERAMIC 0.1MF
C915	1-107-826-11	s	CAPACITOR,CHIP CERAMIC 0.1MF
C916	1-107-826-11	s	CAPACITOR,CHIP CERAMIC 0.1MF
C917	1-107-826-11	s	CAPACITOR,CHIP CERAMIC 0.1MF
C918	1-107-826-11	s	CAPACITOR,CHIP CERAMIC 0.1MF
C919	1-107-826-11	s	CAPACITOR,CHIP CERAMIC 0.1MF
C920	1-107-826-11	s	CAPACITOR,CHIP CERAMIC 0.1MF
C921	1-127-692-11	s	CAP, CHIP CERAMIC 10MF B 3216
C922	1-127-692-11	s	CAP, CHIP CERAMIC 10MF B 3216
C923	1-107-826-11	s	CAPACITOR,CHIP CERAMIC 0.1MF
C924	1-127-692-11	s	CAP, CHIP CERAMIC 10MF B 3216
C925	1-162-927-11	s	CAPACITOR,CERAMIC 100PF/50V CH
C926	1-162-927-11	s	CAPACITOR,CERAMIC 100PF/50V CH
C927	1-162-927-11	s	CAPACITOR,CERAMIC 100PF/50V CH
C928	1-127-692-11	s	CAP, CHIP CERAMIC 10MF B 3216
C929	1-127-692-11	s	CAP, CHIP CERAMIC 10MF B 3216
C930	1-127-692-11	s	CAP, CHIP CERAMIC 10MF B 3216
C931	1-127-692-11	s	CAP, CHIP CERAMIC 10MF B 3216
C932	1-127-692-11	s	CAP, CHIP CERAMIC 10MF B 3216
C933	1-107-826-11	s	CAPACITOR,CHIP CERAMIC 0.1MF
C934	1-107-826-11	s	CAPACITOR,CHIP CERAMIC 0.1MF
C935	1-107-826-11	s	CAPACITOR,CHIP CERAMIC 0.1MF
C936	1-107-826-11	s	CAPACITOR,CHIP CERAMIC 0.1MF
C937	1-107-826-11	s	CAPACITOR,CHIP CERAMIC 0.1MF
C938	1-107-826-11	s	CAPACITOR,CHIP CERAMIC 0.1MF
C939	1-107-826-11	s	CAPACITOR,CHIP CERAMIC 0.1MF
C940	1-107-826-11	s	CAPACITOR,CHIP CERAMIC 0.1MF
C941	1-107-826-11	s	CAPACITOR,CHIP CERAMIC 0.1MF
C942	1-107-826-11	s	CAPACITOR,CHIP CERAMIC 0.1MF
C943	1-107-826-11	s	CAPACITOR,CHIP CERAMIC 0.1MF
C944	1-107-826-11	s	CAPACITOR,CHIP CERAMIC 0.1MF
C945	1-107-826-11	s	CAPACITOR,CHIP CERAMIC 0.1MF
C946	1-107-826-11	s	CAPACITOR,CHIP CERAMIC 0.1MF
C981	1-107-826-11	s	CAPACITOR,CHIP CERAMIC 0.1MF
C1000	1-127-692-11	s	CAP, CHIP CERAMIC 10MF B 3216

(HIF-1 BOARD [SUFFIX 24-] for HDW RECORDER)

Ref. No. or Q'ty	Part No.	SP	Description
C1001	1-127-692-11	s	CAP, CHIP CERAMIC 10MF B 3216
C1002	1-127-692-11	s	CAP, CHIP CERAMIC 10MF B 3216
C1003	1-107-826-11	s	CAPACITOR,CHIP CERAMIC 0.1MF
C1004	1-107-826-11	s	CAPACITOR,CHIP CERAMIC 0.1MF
C1005	1-107-826-11	s	CAPACITOR,CHIP CERAMIC 0.1MF
C1006	1-107-826-11	s	CAPACITOR,CHIP CERAMIC 0.1MF
C1007	1-107-826-11	s	CAPACITOR,CHIP CERAMIC 0.1MF
C1008	1-107-826-11	s	CAPACITOR,CHIP CERAMIC 0.1MF
C1009	1-107-826-11	s	CAPACITOR,CHIP CERAMIC 0.1MF
C1010	1-107-826-11	s	CAPACITOR,CHIP CERAMIC 0.1MF
C1011	1-107-826-11	s	CAPACITOR,CHIP CERAMIC 0.1MF
C1012	1-107-826-11	s	CAPACITOR,CHIP CERAMIC 0.1MF
C1013	1-127-692-11	s	CAP, CHIP CERAMIC 10MF B 3216
C1014	1-127-692-11	s	CAP, CHIP CERAMIC 10MF B 3216
C1015	1-165-870-21	s	CAPACITOR, ELECT 100MF(6.3X6)
C1016	1-127-692-11	s	CAP, CHIP CERAMIC 10MF B 3216
C1017	1-165-870-21	s	CAPACITOR, ELECT 100MF(6.3X6)
C1018	1-127-692-11	s	CAP, CHIP CERAMIC 10MF B 3216
C1019	1-135-342-11	s	CAPACITOR,SOLID ELECT 56MF
C1020	1-127-692-11	s	CAP, CHIP CERAMIC 10MF B 3216
C1022	1-162-970-11	s	CAPACITOR CERAMIC 0.01MF/25V B
C1023	1-127-692-11	s	CAP, CHIP CERAMIC 10MF B 3216
C1024	1-127-692-11	s	CAP, CHIP CERAMIC 10MF B 3216
C1025	1-107-826-11	s	CAPACITOR,CHIP CERAMIC 0.1MF
C1026	1-107-826-11	s	CAPACITOR,CHIP CERAMIC 0.1MF
C1027	1-127-692-11	s	CAP, CHIP CERAMIC 10MF B 3216
C1028	1-127-692-11	s	CAP, CHIP CERAMIC 10MF B 3216
C1029	1-115-416-11	s	CAPACITOR,CERAMIC 1000PF/25V
C1030	1-127-692-11	s	CAP, CHIP CERAMIC 10MF B 3216
C1031	1-107-826-11	s	CAPACITOR,CHIP CERAMIC 0.1MF
C1032	1-107-826-11	s	CAPACITOR,CHIP CERAMIC 0.1MF
C1033	1-125-889-11	s	CAPACITOR, CERAMIC 2.2MF
C1034	1-107-826-11	s	CAPACITOR,CHIP CERAMIC 0.1MF
C1035	1-127-692-11	s	CAP, CHIP CERAMIC 10MF B 3216
C1036	1-127-692-11	s	CAP, CHIP CERAMIC 10MF B 3216
C1037	1-115-416-11	s	CAPACITOR,CERAMIC 1000PF/25V
C1038	1-162-970-11	s	CAPACITOR CERAMIC 0.01MF/25V B
C1040	1-127-692-11	s	CAP, CHIP CERAMIC 10MF B 3216
C1041	1-127-692-11	s	CAP, CHIP CERAMIC 10MF B 3216
C1042	1-107-826-11	s	CAPACITOR,CHIP CERAMIC 0.1MF
C1043	1-135-342-11	s	CAPACITOR,SOLID ELECT 56MF
C1044	1-107-826-11	s	CAPACITOR,CHIP CERAMIC 0.1MF
C1064	1-135-342-11	s	CAPACITOR,SOLID ELECT 56MF
C1065	1-165-870-21	s	CAPACITOR, ELECT 100MF(6.3X6)
C1066	1-165-870-21	s	CAPACITOR, ELECT 100MF(6.3X6)
C1067	1-127-692-11	s	CAP, CHIP CERAMIC 10MF B 3216
C1068	1-127-692-11	s	CAP, CHIP CERAMIC 10MF B 3216
C1069	1-127-692-11	s	CAP, CHIP CERAMIC 10MF B 3216
C1070	1-127-692-11	s	CAP, CHIP CERAMIC 10MF B 3216
C1071	1-127-692-11	s	CAP, CHIP CERAMIC 10MF B 3216
C1072	1-127-692-11	s	CAP, CHIP CERAMIC 10MF B 3216
C1100	1-107-826-11	s	CAPACITOR,CHIP CERAMIC 0.1MF
C1101	1-107-826-11	s	CAPACITOR,CHIP CERAMIC 0.1MF
C1102	1-107-826-11	s	CAPACITOR,CHIP CERAMIC 0.1MF
C1103	1-107-826-11	s	CAPACITOR,CHIP CERAMIC 0.1MF
C1104	1-107-826-11	s	CAPACITOR,CHIP CERAMIC 0.1MF
C1105	1-107-826-11	s	CAPACITOR,CHIP CERAMIC 0.1MF
C1106	1-107-826-11	s	CAPACITOR,CHIP CERAMIC 0.1MF
C1800	1-107-826-11	s	CAPACITOR,CHIP CERAMIC 0.1MF

(HIF-1 BOARD [SUFFIX 24-] for HDW RECORDER)

Ref. No. or Q'ty	Part No.	SP	Description	
C1801	1-107-826-11	s	CAPACITOR,CHIP CERAMIC 0.1MF	
C1802	1-107-826-11	s	CAPACITOR,CHIP CERAMIC 0.1MF	
C1803	1-107-826-11	s	CAPACITOR,CHIP CERAMIC 0.1MF	
C1804	1-107-826-11	s	CAPACITOR,CHIP CERAMIC 0.1MF	
C1805	1-107-826-11	s	CAPACITOR,CHIP CERAMIC 0.1MF	
C1806	1-165-870-21	s	CAPACITOR, ELECT 100MF(6.3X6)	
C1808	1-127-692-11	s	CAP, CHIP CERAMIC 10MF B 3216	
C1809	1-127-692-11	s	CAP, CHIP CERAMIC 10MF B 3216	
C1810	1-127-692-11	s	CAP, CHIP CERAMIC 10MF B 3216	
C1811	1-127-692-11	s	CAP, CHIP CERAMIC 10MF B 3216	
CN200	1-580-789-91	s	PIN, CONNECTOR 6P	
D700	8-719-820-41	s	DIODE 1SS302	
D1000	8-719-066-98	s	DIODE RB051L-40	
D1001	8-719-938-75	s	DIODE SB05-05CP	(RECTI)
D1002	8-719-938-75	s	DIODE SB05-05CP	(RECTI)
D1003	8-719-066-98	s	DIODE RB051L-40	
D1004	8-719-938-75	s	DIODE SB05-05CP	(RECTI)
D1005	8-719-938-75	s	DIODE SB05-05CP	(RECTI)
E100	1-535-877-22	s	CHIP,CHECKER (TEST POINT)	
E200	1-535-877-22	s	CHIP,CHECKER (TEST POINT)	
E300	1-535-877-22	s	CHIP,CHECKER (TEST POINT)	
E500	1-535-877-22	s	CHIP,CHECKER (TEST POINT)	
E600	1-535-877-22	s	CHIP,CHECKER (TEST POINT)	
E700	1-535-877-22	s	CHIP,CHECKER (TEST POINT)	
E900	1-535-877-22	s	CHIP,CHECKER (TEST POINT)	
F1000	⚠ 1-576-270-11	s	FUSE CHIP 4A/125V (6125)	
F1001	⚠ 1-576-329-11	s	FUSE CHIP 10A/125V (6125)	
FB700	1-414-864-11	s	INDUCTOR, MICRO (CHIP TYPE)	
FB701	1-414-864-11	s	INDUCTOR, MICRO (CHIP TYPE)	
FB702	1-414-864-11	s	INDUCTOR, MICRO (CHIP TYPE)	
FB800	1-414-864-11	s	INDUCTOR, MICRO (CHIP TYPE)	
FB801	1-414-864-11	s	INDUCTOR, MICRO (CHIP TYPE)	
FB802	1-414-864-11	s	INDUCTOR, MICRO (CHIP TYPE)	
FB803	1-414-864-11	s	INDUCTOR, MICRO (CHIP TYPE)	
FB804	1-414-864-11	s	INDUCTOR, MICRO (CHIP TYPE)	
FB805	1-414-864-11	s	INDUCTOR, MICRO (CHIP TYPE)	
FB806	1-414-864-11	s	INDUCTOR, MICRO (CHIP TYPE)	
FB807	1-414-864-11	s	INDUCTOR, MICRO (CHIP TYPE)	
FB808	1-414-864-11	s	INDUCTOR, MICRO (CHIP TYPE)	
FB809	1-414-864-11	s	INDUCTOR, MICRO (CHIP TYPE)	
FB810	1-414-864-11	s	INDUCTOR, MICRO (CHIP TYPE)	
IC100	6-700-804-01	s	IC SN74LVC574APWR	
IC101	6-700-804-01	s	IC SN74LVC574APWR	
IC102	8-759-712-31	s	IC SN65LVDT388DBTR	
IC103	8-759-712-31	s	IC SN65LVDT388DBTR	
IC104	8-759-712-31	s	IC SN65LVDT388DBTR	
IC105	8-759-694-36	s	IC SN74CBTLV3257PWR	
IC106	8-759-639-85	s	IC SN65LVDS31DR	
IC107	8-759-712-32	s	IC SN65LVDS389DBTR	
IC108	8-759-712-32	s	IC SN65LVDS389DBTR	
IC109	8-759-712-32	s	IC SN65LVDS389DBTR	
IC110	6-700-804-01	s	IC SN74LVC574APWR	
IC111	6-700-804-01	s	IC SN74LVC574APWR	
IC112	6-700-804-01	s	IC SN74LVC574APWR	
IC113	6-700-804-01	s	IC SN74LVC574APWR	
IC114	6-700-804-01	s	IC SN74LVC574APWR	

(HIF-1 BOARD [SUFFIX 24-] for HDW RECORDER)

Ref. No. or Q'ty	Part No.	SP	Description
IC201	8-759-549-01	s	IC SN74LV125APWR
IC202	8-759-679-55	s	IC SN74LVC08APWR
IC203	8-759-662-39	s	IC 74VHCT245AMTCX
IC204	6-702-148-01	s	IC XC61CN2702NR
IC205	8-759-539-53	s	IC MB90096PF-G-139-BND(ER)
IC206	6-704-718-01	s	IC XC18V02VQG44C
IC208	6-706-484-01	s	IC TC7SH04FU(T5RSOYJF)
IC209	8-759-669-44	s	IC SN74LVC74APWR-12
IC301	8-759-549-15	s	IC SN74LV245APWR
IC302	6-705-983-01	s	IC IS42S32200B-6TL-TR
IC303	6-705-983-01	s	IC IS42S32200B-6TL-TR
IC304	6-705-983-01	s	IC IS42S32200B-6TL-TR
IC305	6-705-983-01	s	IC IS42S32200B-6TL-TR
IC501	6-705-983-01	s	IC IS42S32200B-6TL-TR
IC502	6-705-983-01	s	IC IS42S32200B-6TL-TR
IC504	6-705-983-01	s	IC IS42S32200B-6TL-TR
IC505	6-705-983-01	s	IC IS42S32200B-6TL-TR
IC601	6-705-983-01	s	IC IS42S32200B-6TL-TR
IC602	8-759-392-77	s	IC SN74LVC245APW (E20)
IC603	8-759-392-77	s	IC SN74LVC245APW (E20)
IC604	8-759-392-77	s	IC SN74LVC245APW (E20)
IC605	6-706-487-01	s	IC TC7SH08FU(T5RSOYJF)
IC606	6-706-487-01	s	IC TC7SH08FU(T5RSOYJF)
IC700	8-759-639-86	s	IC SN65LVDS32DR
IC701	8-759-392-77	s	IC SN74LVC245APW (E20)
IC703	8-759-598-13	s	IC CDC2510CPWR
IC704	8-759-694-36	s	IC SN74CBTLV3257PWR
IC705	8-759-639-85	s	IC SN65LVDS31DR
IC706	8-759-592-47	s	IC TC7SZ08FU(TE85R)
IC707	8-759-392-77	s	IC SN74LVC245APW (E20)
IC708	8-759-392-77	s	IC SN74LVC245APW (E20)
IC709	6-706-487-01	s	IC TC7SH08FU(T5RSOYJF)
IC710	6-706-484-01	s	IC TC7SH04FU(T5RSOYJF)
IC711	8-759-585-54	s	IC SN74LVC240APWR
IC712	8-759-598-13	s	IC CDC2510CPWR
IC713	8-759-598-13	s	IC CDC2510CPWR
IC718	8-759-698-08	s	IC SN74CBTLV1G125DCKR
IC719	8-759-698-08	s	IC SN74CBTLV1G125DCKR
IC720	6-706-484-01	s	IC TC7SH04FU(T5RSOYJF)
IC724	8-759-698-08	s	IC SN74CBTLV1G125DCKR
IC725	8-759-698-08	s	IC SN74CBTLV1G125DCKR
IC726	6-706-484-01	s	IC TC7SH04FU(T5RSOYJF)
IC727	8-759-698-08	s	IC SN74CBTLV1G125DCKR
IC728	8-759-698-08	s	IC SN74CBTLV1G125DCKR
IC729	6-706-484-01	s	IC TC7SH04FU(T5RSOYJF)
IC730	8-759-675-47	s	IC SN74LVC04APWR
IC733	6-703-875-01	s	IC CDCVF2505PWR
IC800	8-759-573-91	s	IC AD8055ARTZ-REEL7
IC801	6-704-406-01	s	IC LM1881MX/NOPB
IC802	8-759-573-91	s	IC AD8055ARTZ-REEL7
IC803	6-701-453-01	s	IC SN75207BNSR
IC804	6-706-487-01	s	IC TC7SH08FU(T5RSOYJF)
IC805	8-759-472-35	s	IC 74VHC221AMTCX
IC806	8-759-472-04	s	IC 74VHC74MTCX
IC807	8-759-472-35	s	IC 74VHC221AMTCX
IC808	8-759-678-15	s	IC TLV2231CDBVR
IC809	6-706-478-01	s	IC TC7SET08FU(T5RSOJF)
IC810	8-759-678-15	s	IC TLV2231CDBVR
IC811	8-759-678-15	s	IC TLV2231CDBVR

(HIF-1 BOARD [SUFFIX 24-] for HDW RECORDER)

Ref. No. or Q'ty	Part No.	SP	Description
IC812	8-759-678-15	s	IC TLV2231CDBVR
IC813	8-759-564-49	s	IC TC7W53FU-TE12R
IC814	8-759-564-49	s	IC TC7W53FU-TE12R
IC815	8-759-592-47	s	IC TC7SZ08FU(TE85R)
IC816	8-759-592-49	s	IC TC7SZ125FU(TE85R)
IC817	8-759-592-49	s	IC TC7SZ125FU(TE85R)
IC818	8-759-592-47	s	IC TC7SZ08FU(TE85R)
IC819	8-759-592-47	s	IC TC7SZ08FU(TE85R)
IC820	8-759-592-49	s	IC TC7SZ125FU(TE85R)
IC821	8-759-592-47	s	IC TC7SZ08FU(TE85R)
IC822	8-759-524-08	s	IC TC74VHC139FT(EL)
IC823	8-759-592-49	s	IC TC7SZ125FU(TE85R)
IC824	8-759-592-47	s	IC TC7SZ08FU(TE85R)
IC825	8-759-592-47	s	IC TC7SZ08FU(TE85R)
IC826	8-759-592-47	s	IC TC7SZ08FU(TE85R)
IC827	8-759-183-53	s	IC TL431CPK-E2
IC828	8-759-669-78	s	IC TLC2933IPWR-12
IC829	8-759-669-78	s	IC TLC2933IPWR-12
IC830	8-759-472-35	s	IC 74VHC221AMTCX
IC831	8-759-559-82	s	IC UPC29M33T-E1
IC900	8-759-549-15	s	IC SN74LV245APWR
IC901	8-759-549-15	s	IC SN74LV245APWR
IC902	8-759-549-15	s	IC SN74LV245APWR
IC903	8-759-549-15	s	IC SN74LV245APWR
IC904	8-759-392-77	s	IC SN74LVC245APW (E20)
IC905	8-759-549-15	s	IC SN74LV245APWR
IC906	8-759-549-15	s	IC SN74LV245APWR
IC907	8-759-549-15	s	IC SN74LV245APWR
IC908	8-759-549-15	s	IC SN74LV245APWR
IC910	8-759-549-15	s	IC SN74LV245APWR
IC911	6-704-174-01	s	IC MS81V04160A-25TBZ03J
IC912	8-759-549-15	s	IC SN74LV245APWR
IC913	8-759-662-38	s	IC 74VHCT08AMTCX
IC914	8-759-471-96	s	IC 74VHC08MTCX
IC915	8-759-592-49	s	IC TC7SZ125FU(TE85R)
IC916	8-759-549-15	s	IC SN74LV245APWR
IC917	6-704-174-01	s	IC MS81V04160A-25TBZ03J
IC918	8-759-392-77	s	IC SN74LVC245APW (E20)
IC919	6-706-484-01	s	IC TC7SH04FU(T5RSOYJF)
IC920	8-759-549-15	s	IC SN74LV245APWR
IC980	6-704-718-01	s	IC XC18V02VQG44C
IC1000	8-759-642-22	s	IC UPC29M05T-E2
IC1001	8-759-539-89	s	IC LM2990SX-5.0
IC1002	8-759-642-22	s	IC UPC29M05T-E2
IC1003	6-706-487-01	s	IC TC7SH08FU(T5RSOYJF)
IC1004	8-759-597-57	s	IC LTC1628CG#TR
IC1100	8-759-392-77	s	IC SN74LVC245APW (E20)
IC1101	8-759-392-77	s	IC SN74LVC245APW (E20)
IC1102	8-759-392-77	s	IC SN74LVC245APW (E20)
IC1103	8-759-549-15	s	IC SN74LV245APWR
IC1104	8-759-472-24	s	IC 74VHC157MTCX
IC1105	8-759-472-24	s	IC 74VHC157MTCX
IC1106	8-759-471-91	s	IC 74VHC04MTCX
L800	1-412-987-31	s	INDUCTOR (SMALL TYPE) 4.70UH
L1000	1-419-630-11	s	COIL, CHOKE 4.7UH
L1001	1-419-630-11	s	COIL, CHOKE 4.7UH
L1002	1-419-630-11	s	COIL, CHOKE 4.7UH
L1003	1-419-630-11	s	COIL, CHOKE 4.7UH

(HIF-1 BOARD [SUFFIX 24-] for HDW RECORDER)

Ref. No. or Q'ty	Part No.	SP	Description
L1004	1-419-630-11	s	COIL, CHOKE 4.7UH
L1005	1-469-970-11	s	INDUCTOR, (SMD) 15UH
L1006	1-469-970-11	s	INDUCTOR, (SMD) 15UH
L1007	1-419-630-11	s	COIL, CHOKE 4.7UH
L1008	1-419-630-11	s	COIL, CHOKE 4.7UH
Q200	8-729-928-81	s	TRANSISTOR DTC144EE
Q201	8-729-928-54	s	TRANSISTOR DTA123JE
Q202	8-729-928-19	s	TRANSISTOR 2SA1774R
Q203	8-729-047-32	s	TRANSISTOR SI4425DY-T1
Q700	8-729-928-81	s	TRANSISTOR DTC144EE
Q701	8-729-928-81	s	TRANSISTOR DTC144EE
Q703	8-729-928-19	s	TRANSISTOR 2SA1774R
Q704	8-729-928-19	s	TRANSISTOR 2SA1774R
Q800	8-729-928-19	s	TRANSISTOR 2SA1774R
Q801	8-729-927-99	s	TRANSISTOR 2SC4617R
Q802	8-729-143-07	s	TRANSISTOR 2SA1610-Y33
Q1000	8-729-047-85	s	TRANSISTOR SI4416DY-T1
Q1001	8-729-047-85	s	TRANSISTOR SI4416DY-T1
Q1002	8-729-047-85	s	TRANSISTOR SI4416DY-T1
Q1003	8-729-047-85	s	TRANSISTOR SI4416DY-T1
R100	1-211-985-11	s	RESISTOR,CHIP 47 1/10W (1608)
R101	1-211-985-11	s	RESISTOR,CHIP 47 1/10W (1608)
R125	1-211-985-11	s	RESISTOR,CHIP 47 1/10W (1608)
R126	1-211-977-11	s	RESISTOR,CHIP 22 1/10W (1608)
R127	1-211-977-11	s	RESISTOR,CHIP 22 1/10W (1608)
R128	1-211-977-11	s	RESISTOR,CHIP 22 1/10W (1608)
R129	1-218-847-11	s	RESISTOR, CHIP 1K 1/10W (1608)
R130	1-218-847-11	s	RESISTOR, CHIP 1K 1/10W (1608)
R200	1-211-985-11	s	RESISTOR,CHIP 47 1/10W (1608)
R201	1-211-985-11	s	RESISTOR,CHIP 47 1/10W (1608)
R202	1-211-985-11	s	RESISTOR,CHIP 47 1/10W (1608)
R203	1-211-985-11	s	RESISTOR,CHIP 47 1/10W (1608)
R204	1-211-985-11	s	RESISTOR,CHIP 47 1/10W (1608)
R205	1-211-985-11	s	RESISTOR,CHIP 47 1/10W (1608)
R207	1-211-985-11	s	RESISTOR,CHIP 47 1/10W (1608)
R208	1-211-985-11	s	RESISTOR,CHIP 47 1/10W (1608)
R209	1-211-985-11	s	RESISTOR,CHIP 47 1/10W (1608)
R210	1-211-985-11	s	RESISTOR,CHIP 47 1/10W (1608)
R211	1-211-985-11	s	RESISTOR,CHIP 47 1/10W (1608)
R212	1-211-985-11	s	RESISTOR,CHIP 47 1/10W (1608)
R213	1-211-985-11	s	RESISTOR,CHIP 47 1/10W (1608)
R214	1-211-985-11	s	RESISTOR,CHIP 47 1/10W (1608)
R215	1-211-985-11	s	RESISTOR,CHIP 47 1/10W (1608)
R216	1-211-985-11	s	RESISTOR,CHIP 47 1/10W (1608)
R217	1-211-985-11	s	RESISTOR,CHIP 47 1/10W (1608)
R218	1-211-985-11	s	RESISTOR,CHIP 47 1/10W (1608)
R219	1-211-985-11	s	RESISTOR,CHIP 47 1/10W (1608)
R220	1-211-985-11	s	RESISTOR,CHIP 47 1/10W (1608)
R221	1-211-985-11	s	RESISTOR,CHIP 47 1/10W (1608)
R222	1-211-985-11	s	RESISTOR,CHIP 47 1/10W (1608)
R229	1-211-985-11	s	RESISTOR,CHIP 47 1/10W (1608)
R230	1-211-985-11	s	RESISTOR,CHIP 47 1/10W (1608)
R231	1-211-985-11	s	RESISTOR,CHIP 47 1/10W (1608)
R232	1-211-985-11	s	RESISTOR,CHIP 47 1/10W (1608)
R233	1-211-985-11	s	RESISTOR,CHIP 47 1/10W (1608)
R234	1-211-985-11	s	RESISTOR,CHIP 47 1/10W (1608)
R235	1-211-985-11	s	RESISTOR,CHIP 47 1/10W (1608)
R236	1-211-985-11	s	RESISTOR,CHIP 47 1/10W (1608)
R237	1-211-985-11	s	RESISTOR,CHIP 47 1/10W (1608)

(HIF-1 BOARD [SUFFIX 24-] for HDW RECORDER)

Ref. No. or Q'ty	Part No.	SP	Description
R238	1-211-985-11	s	RESISTOR,CHIP 47 1/10W (1608)
R239	1-211-985-11	s	RESISTOR,CHIP 47 1/10W (1608)
R240	1-211-985-11	s	RESISTOR,CHIP 47 1/10W (1608)
R241	1-211-985-11	s	RESISTOR,CHIP 47 1/10W (1608)
R242	1-211-985-11	s	RESISTOR,CHIP 47 1/10W (1608)
R243	1-211-985-11	s	RESISTOR,CHIP 47 1/10W (1608)
R244	1-211-985-11	s	RESISTOR,CHIP 47 1/10W (1608)
R245	1-211-985-11	s	RESISTOR,CHIP 47 1/10W (1608)
R246	1-211-985-11	s	RESISTOR,CHIP 47 1/10W (1608)
R247	1-211-985-11	s	RESISTOR,CHIP 47 1/10W (1608)
R248	1-211-985-11	s	RESISTOR,CHIP 47 1/10W (1608)
R249	1-211-985-11	s	RESISTOR,CHIP 47 1/10W (1608)
R250	1-211-985-11	s	RESISTOR,CHIP 47 1/10W (1608)
R252	1-218-871-11	s	RESISTOR,CHIP 10K 1/10W (1608)
R253	1-211-985-11	s	RESISTOR,CHIP 47 1/10W (1608)
R254	1-218-835-11	s	RESISTOR,CHIP 330 1/10W (1608)
R255	1-218-847-11	s	RESISTOR, CHIP 1K 1/10W (1608)
R256	1-218-847-11	s	RESISTOR, CHIP 1K 1/10W (1608)
R258	1-211-985-11	s	RESISTOR,CHIP 47 1/10W (1608)
R259	1-211-985-11	s	RESISTOR,CHIP 47 1/10W (1608)
R260	1-211-985-11	s	RESISTOR,CHIP 47 1/10W (1608)
R261	1-211-985-11	s	RESISTOR,CHIP 47 1/10W (1608)
R262	1-211-985-11	s	RESISTOR,CHIP 47 1/10W (1608)
R263	1-218-847-11	s	RESISTOR, CHIP 1K 1/10W (1608)
R264	1-218-847-11	s	RESISTOR, CHIP 1K 1/10W (1608)
R265	1-218-835-11	s	RESISTOR,CHIP 330 1/10W (1608)
R266	1-218-835-11	s	RESISTOR,CHIP 330 1/10W (1608)
R267	1-218-835-11	s	RESISTOR,CHIP 330 1/10W (1608)
R268	1-218-863-11	s	RESISTOR,CHIP 4.7K 1/10W(1608)
R269	1-211-985-11	s	RESISTOR,CHIP 47 1/10W (1608)
R273	1-216-864-11	s	CONDUCTOR, CHIP (1608)
R300	1-218-883-11	s	RESISTOR,CHIP 33K 1/10W (1608)
R301	1-218-847-11	s	RESISTOR, CHIP 1K 1/10W (1608)
R302	1-211-985-11	s	RESISTOR,CHIP 47 1/10W (1608)
R303	1-211-985-11	s	RESISTOR,CHIP 47 1/10W (1608)
R310	1-216-864-11	s	CONDUCTOR, CHIP (1608)
R313	1-216-864-11	s	CONDUCTOR, CHIP (1608)
R501	1-211-985-11	s	RESISTOR,CHIP 47 1/10W (1608)
R502	1-211-985-11	s	RESISTOR,CHIP 47 1/10W (1608)
R503	1-216-864-11	s	CONDUCTOR, CHIP (1608)
R504	1-216-864-11	s	CONDUCTOR, CHIP (1608)
R600	1-218-871-11	s	RESISTOR,CHIP 10K 1/10W (1608)
R601	1-218-871-11	s	RESISTOR,CHIP 10K 1/10W (1608)
R602	1-218-871-11	s	RESISTOR,CHIP 10K 1/10W (1608)
R603	1-218-871-11	s	RESISTOR,CHIP 10K 1/10W (1608)
R604	1-218-871-11	s	RESISTOR,CHIP 10K 1/10W (1608)
R605	1-218-871-11	s	RESISTOR,CHIP 10K 1/10W (1608)
R606	1-218-871-11	s	RESISTOR,CHIP 10K 1/10W (1608)
R607	1-218-871-11	s	RESISTOR,CHIP 10K 1/10W (1608)
R608	1-218-871-11	s	RESISTOR,CHIP 10K 1/10W (1608)
R609	1-218-871-11	s	RESISTOR,CHIP 10K 1/10W (1608)
R610	1-218-871-11	s	RESISTOR,CHIP 10K 1/10W (1608)
R611	1-218-871-11	s	RESISTOR,CHIP 10K 1/10W (1608)
R612	1-218-871-11	s	RESISTOR,CHIP 10K 1/10W (1608)
R613	1-218-871-11	s	RESISTOR,CHIP 10K 1/10W (1608)
R614	1-218-871-11	s	RESISTOR,CHIP 10K 1/10W (1608)
R615	1-218-871-11	s	RESISTOR,CHIP 10K 1/10W (1608)
R616	1-218-871-11	s	RESISTOR,CHIP 10K 1/10W (1608)
R617	1-218-871-11	s	RESISTOR,CHIP 10K 1/10W (1608)

(HIF-1 BOARD [SUFFIX 24-] for HDW RECORDER)

Ref. No. or Q'ty	Part No.	SP	Description
R618	1-218-871-11	s	RESISTOR,CHIP 10K 1/10W (1608)
R619	1-218-871-11	s	RESISTOR,CHIP 10K 1/10W (1608)
R620	1-211-985-11	s	RESISTOR,CHIP 47 1/10W (1608)
R621	1-211-985-11	s	RESISTOR,CHIP 47 1/10W (1608)
R622	1-211-985-11	s	RESISTOR,CHIP 47 1/10W (1608)
R623	1-211-985-11	s	RESISTOR,CHIP 47 1/10W (1608)
R624	1-211-985-11	s	RESISTOR,CHIP 47 1/10W (1608)
R625	1-211-985-11	s	RESISTOR,CHIP 47 1/10W (1608)
R626	1-211-985-11	s	RESISTOR,CHIP 47 1/10W (1608)
R627	1-218-831-11	s	RESISTOR, CHIP 220 1/10W(1608)
R628	1-218-831-11	s	RESISTOR, CHIP 220 1/10W(1608)
R700	1-218-823-11	s	RESISTOR,CHIP 100 1/10W (1608)
R701	1-218-823-11	s	RESISTOR,CHIP 100 1/10W (1608)
R702	1-218-823-11	s	RESISTOR,CHIP 100 1/10W (1608)
R703	1-218-823-11	s	RESISTOR,CHIP 100 1/10W (1608)
R704	1-218-831-11	s	RESISTOR, CHIP 220 1/10W(1608)
R705	1-218-831-11	s	RESISTOR, CHIP 220 1/10W(1608)
R706	1-218-851-11	s	RESISTOR,CHIP 1.5K 1/10W(1608)
R707	1-218-847-11	s	RESISTOR, CHIP 1K 1/10W (1608)
R708	1-218-863-11	s	RESISTOR,CHIP 4.7K 1/10W(1608)
R711	1-211-985-11	s	RESISTOR,CHIP 47 1/10W (1608)
R712	1-211-985-11	s	RESISTOR,CHIP 47 1/10W (1608)
R713	1-211-985-11	s	RESISTOR,CHIP 47 1/10W (1608)
R714	1-211-985-11	s	RESISTOR,CHIP 47 1/10W (1608)
R716	1-216-864-11	s	CONDUCTOR, CHIP (1608)
R717	1-216-864-11	s	CONDUCTOR, CHIP (1608)
R718	1-216-864-11	s	CONDUCTOR, CHIP (1608)
R719	1-218-863-11	s	RESISTOR,CHIP 4.7K 1/10W(1608)
R720	1-216-864-11	s	CONDUCTOR, CHIP (1608)
R721	1-216-864-11	s	CONDUCTOR, CHIP (1608)
R722	1-216-864-11	s	CONDUCTOR, CHIP (1608)
R723	1-216-864-11	s	CONDUCTOR, CHIP (1608)
R724	1-216-864-11	s	CONDUCTOR, CHIP (1608)
R725	1-216-864-11	s	CONDUCTOR, CHIP (1608)
R726	1-216-864-11	s	CONDUCTOR, CHIP (1608)
R727	1-216-864-11	s	CONDUCTOR, CHIP (1608)
R728	1-216-864-11	s	CONDUCTOR, CHIP (1608)
R729	1-218-857-11	s	RESISTOR,CHIP 2.7K 1/10W(1608)
R733	1-211-985-11	s	RESISTOR,CHIP 47 1/10W (1608)
R734	1-211-985-11	s	RESISTOR,CHIP 47 1/10W (1608)
R735	1-211-985-11	s	RESISTOR,CHIP 47 1/10W (1608)
R736	1-211-985-11	s	RESISTOR,CHIP 47 1/10W (1608)
R737	1-211-985-11	s	RESISTOR,CHIP 47 1/10W (1608)
R738	1-211-985-11	s	RESISTOR,CHIP 47 1/10W (1608)
R739	1-211-985-11	s	RESISTOR,CHIP 47 1/10W (1608)
R740	1-211-985-11	s	RESISTOR,CHIP 47 1/10W (1608)
R743	1-211-985-11	s	RESISTOR,CHIP 47 1/10W (1608)
R744	1-211-985-11	s	RESISTOR,CHIP 47 1/10W (1608)
R745	1-211-985-11	s	RESISTOR,CHIP 47 1/10W (1608)
R746	1-211-985-11	s	RESISTOR,CHIP 47 1/10W (1608)
R747	1-211-985-11	s	RESISTOR,CHIP 47 1/10W (1608)
R750	1-211-985-11	s	RESISTOR,CHIP 47 1/10W (1608)
R753	1-211-985-11	s	RESISTOR,CHIP 47 1/10W (1608)
R754	1-211-985-11	s	RESISTOR,CHIP 47 1/10W (1608)
R755	1-211-985-11	s	RESISTOR,CHIP 47 1/10W (1608)
R756	1-218-847-11	s	RESISTOR, CHIP 1K 1/10W (1608)
R757	1-218-847-11	s	RESISTOR, CHIP 1K 1/10W (1608)
R758	1-218-847-11	s	RESISTOR, CHIP 1K 1/10W (1608)
R759	1-211-977-11	s	RESISTOR,CHIP 22 1/10W (1608)

(HIF-1 BOARD [SUFFIX 24-] for HDW RECORDER)

Ref. No. or Q'ty	Part No.	SP	Description
R760	1-211-977-11	s	RESISTOR,CHIP 22 1/10W (1608)
R761	1-211-977-11	s	RESISTOR,CHIP 22 1/10W (1608)
R762	1-211-977-11	s	RESISTOR,CHIP 22 1/10W (1608)
R763	1-211-977-11	s	RESISTOR,CHIP 22 1/10W (1608)
R764	1-211-977-11	s	RESISTOR,CHIP 22 1/10W (1608)
R765	1-211-977-11	s	RESISTOR,CHIP 22 1/10W (1608)
R766	1-211-977-11	s	RESISTOR,CHIP 22 1/10W (1608)
R767	1-211-977-11	s	RESISTOR,CHIP 22 1/10W (1608)
R768	1-211-977-11	s	RESISTOR,CHIP 22 1/10W (1608)
R770	1-218-895-11	s	RESISTOR,CHIP 100K 1/10W(1608)
R771	1-218-847-11	s	RESISTOR, CHIP 1K 1/10W (1608)
R772	1-218-871-11	s	RESISTOR,CHIP 10K 1/10W (1608)
R773	1-211-985-11	s	RESISTOR,CHIP 47 1/10W (1608)
R774	1-211-985-11	s	RESISTOR,CHIP 47 1/10W (1608)
R775	1-218-895-11	s	RESISTOR,CHIP 100K 1/10W(1608)
R776	1-211-969-11	s	RESISTOR,CHIP 10 1/10W (1608)
R777	1-211-969-11	s	RESISTOR,CHIP 10 1/10W (1608)
R778	1-211-969-11	s	RESISTOR,CHIP 10 1/10W (1608)
R779	1-218-863-11	s	RESISTOR,CHIP 4.7K 1/10W(1608)
R780	1-211-969-11	s	RESISTOR,CHIP 10 1/10W (1608)
R781	1-218-863-11	s	RESISTOR,CHIP 4.7K 1/10W(1608)
R782	1-216-864-11	s	CONDUCTOR, CHIP (1608)
R784	1-211-985-11	s	RESISTOR,CHIP 47 1/10W (1608)
R786	1-218-847-11	s	RESISTOR, CHIP 1K 1/10W (1608)
R787	1-218-847-11	s	RESISTOR, CHIP 1K 1/10W (1608)
R788	1-218-847-11	s	RESISTOR, CHIP 1K 1/10W (1608)
R789	1-218-847-11	s	RESISTOR, CHIP 1K 1/10W (1608)
R790	1-218-831-11	s	RESISTOR, CHIP 220 1/10W(1608)
R791	1-211-985-11	s	RESISTOR,CHIP 47 1/10W (1608)
R792	1-211-977-11	s	RESISTOR,CHIP 22 1/10W (1608)
R793	1-211-977-11	s	RESISTOR,CHIP 22 1/10W (1608)
R795	1-218-863-11	s	RESISTOR,CHIP 4.7K 1/10W(1608)
R796	1-218-863-11	s	RESISTOR,CHIP 4.7K 1/10W(1608)
R798	1-211-977-11	s	RESISTOR,CHIP 22 1/10W (1608)
R799	1-211-977-11	s	RESISTOR,CHIP 22 1/10W (1608)
R800	1-218-847-11	s	RESISTOR, CHIP 1K 1/10W (1608)
R801	1-218-847-11	s	RESISTOR, CHIP 1K 1/10W (1608)
R802	1-216-864-11	s	CONDUCTOR, CHIP (1608)
R803	1-216-864-11	s	CONDUCTOR, CHIP (1608)
R804	1-216-864-11	s	CONDUCTOR, CHIP (1608)
R805	1-218-847-11	s	RESISTOR, CHIP 1K 1/10W (1608)
R806	1-218-847-11	s	RESISTOR, CHIP 1K 1/10W (1608)
R807	1-218-847-11	s	RESISTOR, CHIP 1K 1/10W (1608)
R808	1-218-847-11	s	RESISTOR, CHIP 1K 1/10W (1608)
R809	1-218-847-11	s	RESISTOR, CHIP 1K 1/10W (1608)
R810	1-218-847-11	s	RESISTOR, CHIP 1K 1/10W (1608)
R811	1-211-985-11	s	RESISTOR,CHIP 47 1/10W (1608)
R812	1-218-847-11	s	RESISTOR, CHIP 1K 1/10W (1608)
R813	1-211-977-11	s	RESISTOR,CHIP 22 1/10W (1608)
R814	1-218-839-11	s	RESISTOR,CHIP 470 1/10W (1608)
R815	1-218-839-11	s	RESISTOR,CHIP 470 1/10W (1608)
R816	1-218-847-11	s	RESISTOR, CHIP 1K 1/10W (1608)
R817	1-218-832-11	s	RESISTOR,CHIP 240 1/10W (1608)
R818	1-218-856-11	s	RESISTOR,CHIP 2.4K 1/10W(1608)
R819	1-218-847-11	s	RESISTOR, CHIP 1K 1/10W (1608)
R820	1-218-827-11	s	RESISTOR,CHIP 150 1/10W (1608)
R821	1-218-827-11	s	RESISTOR,CHIP 150 1/10W (1608)
R824	1-218-879-11	s	RESISTOR,CHIP 22K 1/10W (1608)
R825	1-218-855-11	s	RESISTOR,CHIP 2.2K 1/10W(1608)

(HIF-1 BOARD [SUFFIX 24-] for HDW RECORDER)

Ref. No. or Q'ty	Part No.	SP	Description
R826	1-218-865-11	s	RESISTOR,CHIP 5.6K 1/10W(1608)
R827	1-218-871-11	s	RESISTOR,CHIP 10K 1/10W (1608)
R828	1-216-863-11	s	RESISTOR,CHIP 3.3M 1/16W 1608
R829	1-218-827-11	s	RESISTOR,CHIP 150 1/10W (1608)
R830	1-218-827-11	s	RESISTOR,CHIP 150 1/10W (1608)
R831	1-218-855-11	s	RESISTOR,CHIP 2.2K 1/10W(1608)
R832	1-218-847-11	s	RESISTOR, CHIP 1K 1/10W (1608)
R833	1-218-847-11	s	RESISTOR, CHIP 1K 1/10W (1608)
R834	1-218-823-11	s	RESISTOR,CHIP 100 1/10W (1608)
R835	1-218-859-11	s	RESISTOR,CHIP 3.3K 1/10W(1608)
R836	1-218-823-11	s	RESISTOR,CHIP 100 1/10W (1608)
R837	1-218-855-11	s	RESISTOR,CHIP 2.2K 1/10W(1608)
R838	1-218-823-11	s	RESISTOR,CHIP 100 1/10W (1608)
R839	1-218-863-11	s	RESISTOR,CHIP 4.7K 1/10W(1608)
R840	1-218-858-11	s	RESISTOR, CHIP 3K 1/10W (1608)
R841	1-218-847-11	s	RESISTOR, CHIP 1K 1/10W (1608)
R842	1-218-847-11	s	RESISTOR, CHIP 1K 1/10W (1608)
R843	1-218-847-11	s	RESISTOR, CHIP 1K 1/10W (1608)
R844	1-218-847-11	s	RESISTOR, CHIP 1K 1/10W (1608)
R845	1-216-864-11	s	CONDUCTOR, CHIP (1608)
R847	1-218-895-11	s	RESISTOR,CHIP 100K 1/10W(1608)
R848	1-218-895-11	s	RESISTOR,CHIP 100K 1/10W(1608)
R849	1-218-895-11	s	RESISTOR,CHIP 100K 1/10W(1608)
R850	1-218-871-11	s	RESISTOR,CHIP 10K 1/10W (1608)
R851	1-218-871-11	s	RESISTOR,CHIP 10K 1/10W (1608)
R852	1-218-871-11	s	RESISTOR,CHIP 10K 1/10W (1608)
R853	1-218-903-11	s	RESISTOR,CHIP 220K 1/10W(1608)
R854	1-218-871-11	s	RESISTOR,CHIP 10K 1/10W (1608)
R855	1-218-871-11	s	RESISTOR,CHIP 10K 1/10W (1608)
R857	1-218-871-11	s	RESISTOR,CHIP 10K 1/10W (1608)
R858	1-218-871-11	s	RESISTOR,CHIP 10K 1/10W (1608)
R859	1-218-831-11	s	RESISTOR, CHIP 220 1/10W(1608)
R860	1-218-839-11	s	RESISTOR,CHIP 470 1/10W (1608)
R861	1-218-839-11	s	RESISTOR,CHIP 470 1/10W (1608)
R862	1-211-985-11	s	RESISTOR,CHIP 47 1/10W (1608)
R863	1-211-985-11	s	RESISTOR,CHIP 47 1/10W (1608)
R864	1-211-985-11	s	RESISTOR,CHIP 47 1/10W (1608)
R865	1-211-985-11	s	RESISTOR,CHIP 47 1/10W (1608)
R866	1-211-985-11	s	RESISTOR,CHIP 47 1/10W (1608)
R867	1-211-985-11	s	RESISTOR,CHIP 47 1/10W (1608)
R868	1-211-985-11	s	RESISTOR,CHIP 47 1/10W (1608)
R869	1-211-985-11	s	RESISTOR,CHIP 47 1/10W (1608)
R900	1-218-847-11	s	RESISTOR, CHIP 1K 1/10W (1608)
R901	1-218-823-11	s	RESISTOR,CHIP 100 1/10W (1608)
R902	1-218-847-11	s	RESISTOR, CHIP 1K 1/10W (1608)
R903	1-218-847-11	s	RESISTOR, CHIP 1K 1/10W (1608)
R904	1-211-969-11	s	RESISTOR,CHIP 10 1/10W (1608)
R905	1-211-969-11	s	RESISTOR,CHIP 10 1/10W (1608)
R908	1-218-863-11	s	RESISTOR,CHIP 4.7K 1/10W(1608)
R909	1-218-863-11	s	RESISTOR,CHIP 4.7K 1/10W(1608)
R910	1-218-895-11	s	RESISTOR,CHIP 100K 1/10W(1608)
R911	1-218-895-11	s	RESISTOR,CHIP 100K 1/10W(1608)
R912	1-218-895-11	s	RESISTOR,CHIP 100K 1/10W(1608)
R913	1-211-985-11	s	RESISTOR,CHIP 47 1/10W (1608)
R915	1-218-895-11	s	RESISTOR,CHIP 100K 1/10W(1608)
R916	1-218-895-11	s	RESISTOR,CHIP 100K 1/10W(1608)
R917	1-211-985-11	s	RESISTOR,CHIP 47 1/10W (1608)
R918	1-211-985-11	s	RESISTOR,CHIP 47 1/10W (1608)
R925	1-216-864-11	s	CONDUCTOR, CHIP (1608)

(HIF-1 BOARD [SUFFIX 24-] for HDW RECORDER)

Ref. No. or Q'ty	Part No.	SP	Description
R926	1-216-864-11	s	CONDUCTOR, CHIP (1608)
R927	1-218-895-11	s	RESISTOR,CHIP 100K 1/10W(1608)
R928	1-211-985-11	s	RESISTOR,CHIP 47 1/10W (1608)
R929	1-211-985-11	s	RESISTOR,CHIP 47 1/10W (1608)
R936	1-211-969-11	s	RESISTOR,CHIP 10 1/10W (1608)
R940	1-211-985-11	s	RESISTOR,CHIP 47 1/10W (1608)
R941	1-211-985-11	s	RESISTOR,CHIP 47 1/10W (1608)
R942	1-211-985-11	s	RESISTOR,CHIP 47 1/10W (1608)
R943	1-211-985-11	s	RESISTOR,CHIP 47 1/10W (1608)
R944	1-218-895-11	s	RESISTOR,CHIP 100K 1/10W(1608)
R945	1-211-985-11	s	RESISTOR,CHIP 47 1/10W (1608)
R946	1-211-969-11	s	RESISTOR,CHIP 10 1/10W (1608)
R947	1-211-969-11	s	RESISTOR,CHIP 10 1/10W (1608)
R948	1-211-969-11	s	RESISTOR,CHIP 10 1/10W (1608)
R949	1-211-985-11	s	RESISTOR,CHIP 47 1/10W (1608)
R950	1-211-985-11	s	RESISTOR,CHIP 47 1/10W (1608)
R951	1-211-985-11	s	RESISTOR,CHIP 47 1/10W (1608)
R952	1-211-985-11	s	RESISTOR,CHIP 47 1/10W (1608)
R953	1-218-823-11	s	RESISTOR,CHIP 100 1/10W (1608)
R954	1-218-823-11	s	RESISTOR,CHIP 100 1/10W (1608)
R955	1-211-985-11	s	RESISTOR,CHIP 47 1/10W (1608)
R956	1-211-985-11	s	RESISTOR,CHIP 47 1/10W (1608)
R957	1-211-985-11	s	RESISTOR,CHIP 47 1/10W (1608)
R962	1-211-985-11	s	RESISTOR,CHIP 47 1/10W (1608)
R963	1-211-985-11	s	RESISTOR,CHIP 47 1/10W (1608)
R964	1-211-969-11	s	RESISTOR,CHIP 10 1/10W (1608)
R965	1-211-985-11	s	RESISTOR,CHIP 47 1/10W (1608)
R981	1-218-835-11	s	RESISTOR,CHIP 330 1/10W (1608)
R982	1-218-863-11	s	RESISTOR,CHIP 4.7K 1/10W(1608)
R990	1-218-847-11	s	RESISTOR, CHIP 1K 1/10W (1608)
R1000	1-219-610-11	s	RESISTOR, (SQUARE TYPE) 0.022
R1003	1-211-969-11	s	RESISTOR,CHIP 10 1/10W (1608)
R1004	1-211-969-11	s	RESISTOR,CHIP 10 1/10W (1608)
R1005	1-218-880-11	s	RESISTOR,CHIP 24K 1/10W (1608)
R1006	1-218-877-11	s	RESISTOR,CHIP 18K 1/10W (1608)
R1007	1-211-985-11	s	RESISTOR,CHIP 47 1/10W (1608)
R1008	1-211-985-11	s	RESISTOR,CHIP 47 1/10W (1608)
R1009	1-218-863-11	s	RESISTOR,CHIP 4.7K 1/10W(1608)
R1016	1-218-823-11	s	RESISTOR,CHIP 100 1/10W (1608)
R1021	1-218-863-11	s	RESISTOR,CHIP 4.7K 1/10W(1608)
R1022	1-218-871-11	s	RESISTOR,CHIP 10K 1/10W (1608)
R1023	1-218-871-11	s	RESISTOR,CHIP 10K 1/10W (1608)
R1026	1-211-969-11	s	RESISTOR,CHIP 10 1/10W (1608)
R1027	1-211-969-11	s	RESISTOR,CHIP 10 1/10W (1608)
R1028	1-219-610-11	s	RESISTOR, (SQUARE TYPE) 0.022
R1700	1-211-977-11	s	RESISTOR,CHIP 22 1/10W (1608)
R1701	1-211-977-11	s	RESISTOR,CHIP 22 1/10W (1608)
R1702	1-211-977-11	s	RESISTOR,CHIP 22 1/10W (1608)
R1703	1-211-977-11	s	RESISTOR,CHIP 22 1/10W (1608)
R1704	1-211-977-11	s	RESISTOR,CHIP 22 1/10W (1608)
R1705	1-211-977-11	s	RESISTOR,CHIP 22 1/10W (1608)
R1707	1-211-977-11	s	RESISTOR,CHIP 22 1/10W (1608)
R1708	1-211-977-11	s	RESISTOR,CHIP 22 1/10W (1608)
R1709	1-211-977-11	s	RESISTOR,CHIP 22 1/10W (1608)
R1710	1-211-977-11	s	RESISTOR,CHIP 22 1/10W (1608)
R1711	1-211-977-11	s	RESISTOR,CHIP 22 1/10W (1608)
R1712	1-211-977-11	s	RESISTOR,CHIP 22 1/10W (1608)
R1714	1-211-977-11	s	RESISTOR,CHIP 22 1/10W (1608)
R1716	1-211-977-11	s	RESISTOR,CHIP 22 1/10W (1608)

(HIF-1 BOARD [SUFFIX 24-] for HDW RECORDER)

Ref. No. or Q'ty	Part No.	SP	Description
R1717	1-211-977-11	s	RESISTOR,CHIP 22 1/10W (1608)
R1718	1-211-985-11	s	RESISTOR,CHIP 47 1/10W (1608)
R1719	1-211-985-11	s	RESISTOR,CHIP 47 1/10W (1608)
R1720	1-211-985-11	s	RESISTOR,CHIP 47 1/10W (1608)
R1721	1-211-985-11	s	RESISTOR,CHIP 47 1/10W (1608)
R1722	1-211-985-11	s	RESISTOR,CHIP 47 1/10W (1608)
R1729	1-211-977-11	s	RESISTOR,CHIP 22 1/10W (1608)
R1738	1-218-831-11	s	RESISTOR, CHIP 220 1/10W(1608)
RB100	1-233-575-11	s	RES, CHIP NETWORK 22
RB101	1-233-575-11	s	RES, CHIP NETWORK 22
RB102	1-233-575-11	s	RES, CHIP NETWORK 22
RB103	1-233-575-11	s	RES, CHIP NETWORK 22
RB104	1-233-575-11	s	RES, CHIP NETWORK 22
RB105	1-233-575-11	s	RES, CHIP NETWORK 22
RB106	1-239-409-11	s	RESISTOR NETWORK 47 (1608)
RB107	1-239-409-11	s	RESISTOR NETWORK 47 (1608)
RB108	1-239-409-11	s	RESISTOR NETWORK 47 (1608)
RB109	1-239-409-11	s	RESISTOR NETWORK 47 (1608)
RB110	1-239-409-11	s	RESISTOR NETWORK 47 (1608)
RB111	1-239-409-11	s	RESISTOR NETWORK 47 (1608)
RB112	1-239-409-11	s	RESISTOR NETWORK 47 (1608)
RB113	1-239-409-11	s	RESISTOR NETWORK 47 (1608)
RB114	1-239-409-11	s	RESISTOR NETWORK 47 (1608)
RB115	1-239-409-11	s	RESISTOR NETWORK 47 (1608)
RB116	1-239-409-11	s	RESISTOR NETWORK 47 (1608)
RB117	1-239-409-11	s	RESISTOR NETWORK 47 (1608)
RB118	1-239-409-11	s	RESISTOR NETWORK 47 (1608)
RB119	1-233-411-11	s	RESISTOR,CHIP NETWORK 220/3216
RB120	1-233-411-11	s	RESISTOR,CHIP NETWORK 220/3216
RB121	1-233-411-11	s	RESISTOR,CHIP NETWORK 220/3216
RB122	1-233-411-11	s	RESISTOR,CHIP NETWORK 220/3216
RB123	1-233-411-11	s	RESISTOR,CHIP NETWORK 220/3216
RB124	1-233-411-11	s	RESISTOR,CHIP NETWORK 220/3216
RB125	1-239-409-11	s	RESISTOR NETWORK 47 (1608)
RB126	1-239-409-11	s	RESISTOR NETWORK 47 (1608)
RB127	1-239-409-11	s	RESISTOR NETWORK 47 (1608)
RB128	1-239-409-11	s	RESISTOR NETWORK 47 (1608)
RB129	1-239-409-11	s	RESISTOR NETWORK 47 (1608)
RB130	1-239-409-11	s	RESISTOR NETWORK 47 (1608)
RB200	1-239-409-11	s	RESISTOR NETWORK 47 (1608)
RB201	1-239-409-11	s	RESISTOR NETWORK 47 (1608)
RB202	1-239-409-11	s	RESISTOR NETWORK 47 (1608)
RB203	1-239-409-11	s	RESISTOR NETWORK 47 (1608)
RB204	1-239-409-11	s	RESISTOR NETWORK 47 (1608)
RB205	1-239-409-11	s	RESISTOR NETWORK 47 (1608)
RB206	1-239-409-11	s	RESISTOR NETWORK 47 (1608)
RB207	1-239-409-11	s	RESISTOR NETWORK 47 (1608)
RB208	1-239-409-11	s	RESISTOR NETWORK 47 (1608)
RB209	1-239-409-11	s	RESISTOR NETWORK 47 (1608)
RB210	1-239-409-11	s	RESISTOR NETWORK 47 (1608)
RB211	1-239-409-11	s	RESISTOR NETWORK 47 (1608)
RB216	1-239-409-11	s	RESISTOR NETWORK 47 (1608)
RB217	1-239-409-11	s	RESISTOR NETWORK 47 (1608)
RB218	1-239-409-11	s	RESISTOR NETWORK 47 (1608)
RB219	1-239-409-11	s	RESISTOR NETWORK 47 (1608)
RB220	1-239-409-11	s	RESISTOR NETWORK 47 (1608)
RB221	1-239-409-11	s	RESISTOR NETWORK 47 (1608)
RB222	1-239-409-11	s	RESISTOR NETWORK 47 (1608)

(HIF-1 BOARD [SUFFIX 24-] for HDW RECORDER)

Ref. No. or Q'ty	Part No.	SP	Description
RB223	1-239-409-11	s	RESISTOR NETWORK 47 (1608)
RB224	1-236-908-11	s	RESISTOR,NETWORK 10K (3216)
RB300	1-239-409-11	s	RESISTOR NETWORK 47 (1608)
RB301	1-239-409-11	s	RESISTOR NETWORK 47 (1608)
RB302	1-239-409-11	s	RESISTOR NETWORK 47 (1608)
RB303	1-239-409-11	s	RESISTOR NETWORK 47 (1608)
RB304	1-239-409-11	s	RESISTOR NETWORK 47 (1608)
RB309	1-239-409-11	s	RESISTOR NETWORK 47 (1608)
RB500	1-239-409-11	s	RESISTOR NETWORK 47 (1608)
RB501	1-239-409-11	s	RESISTOR NETWORK 47 (1608)
RB502	1-239-409-11	s	RESISTOR NETWORK 47 (1608)
RB503	1-239-409-11	s	RESISTOR NETWORK 47 (1608)
RB504	1-239-409-11	s	RESISTOR NETWORK 47 (1608)
RB505	1-233-575-11	s	RES, CHIP NETWORK 22
RB506	1-233-575-11	s	RES, CHIP NETWORK 22
RB507	1-233-575-11	s	RES, CHIP NETWORK 22
RB508	1-233-575-11	s	RES, CHIP NETWORK 22
RB509	1-233-575-11	s	RES, CHIP NETWORK 22
RB510	1-233-575-11	s	RES, CHIP NETWORK 22
RB511	1-233-575-11	s	RES, CHIP NETWORK 22
RB512	1-233-575-11	s	RES, CHIP NETWORK 22
RB513	1-233-575-11	s	RES, CHIP NETWORK 22
RB514	1-233-575-11	s	RES, CHIP NETWORK 22
RB515	1-233-575-11	s	RES, CHIP NETWORK 22
RB516	1-233-575-11	s	RES, CHIP NETWORK 22
RB600	1-239-409-11	s	RESISTOR NETWORK 47 (1608)
RB601	1-239-409-11	s	RESISTOR NETWORK 47 (1608)
RB602	1-239-409-11	s	RESISTOR NETWORK 47 (1608)
RB603	1-239-409-11	s	RESISTOR NETWORK 47 (1608)
RB604	1-233-575-11	s	RES, CHIP NETWORK 22
RB605	1-233-575-11	s	RES, CHIP NETWORK 22
RB606	1-233-575-11	s	RES, CHIP NETWORK 22
RB607	1-233-575-11	s	RES, CHIP NETWORK 22
RB608	1-233-575-11	s	RES, CHIP NETWORK 22
RB609	1-233-575-11	s	RES, CHIP NETWORK 22
RB701	1-239-409-11	s	RESISTOR NETWORK 47 (1608)
RB702	1-239-409-11	s	RESISTOR NETWORK 47 (1608)
RB703	1-233-575-11	s	RES, CHIP NETWORK 22
RB704	1-233-575-11	s	RES, CHIP NETWORK 22
RB705	1-233-575-11	s	RES, CHIP NETWORK 22
RB706	1-233-575-11	s	RES, CHIP NETWORK 22
RB900	1-233-810-21	s	RES, NETWORK 100K (3216)
RB901	1-233-810-21	s	RES, NETWORK 100K (3216)
RB902	1-233-810-21	s	RES, NETWORK 100K (3216)
RB903	1-233-810-21	s	RES, NETWORK 100K (3216)
RB904	1-233-810-21	s	RES, NETWORK 100K (3216)
RB905	1-233-810-21	s	RES, NETWORK 100K (3216)
RB906	1-233-810-21	s	RES, NETWORK 100K (3216)
RB907	1-233-412-11	s	RESISTOR,CHIP NETWORK 1K
RB908	1-239-409-11	s	RESISTOR NETWORK 47 (1608)
RB909	1-239-409-11	s	RESISTOR NETWORK 47 (1608)
RB910	1-239-409-11	s	RESISTOR NETWORK 47 (1608)
RB911	1-239-409-11	s	RESISTOR NETWORK 47 (1608)
RB912	1-239-409-11	s	RESISTOR NETWORK 47 (1608)
RB913	1-239-409-11	s	RESISTOR NETWORK 47 (1608)
RB914	1-239-409-11	s	RESISTOR NETWORK 47 (1608)
RB915	1-233-412-11	s	RESISTOR,CHIP NETWORK 1K
RB916	1-233-412-11	s	RESISTOR,CHIP NETWORK 1K
RB917	1-239-409-11	s	RESISTOR NETWORK 47 (1608)

(HIF-1 BOARD [SUFFIX 24-] for HDW RECORDER)

Ref. No. or Q'ty	Part No.	SP	Description
RB918	1-233-414-11	s	RESISTOR,CHIP NETWORK 4.7K
RB919	1-233-414-11	s	RESISTOR,CHIP NETWORK 4.7K
RB920	1-233-414-11	s	RESISTOR,CHIP NETWORK 4.7K
RB921	1-233-414-11	s	RESISTOR,CHIP NETWORK 4.7K
RB922	1-233-810-21	s	RES, NETWORK 100K (3216)
RB923	1-233-810-21	s	RES, NETWORK 100K (3216)
RB924	1-233-810-21	s	RES, NETWORK 100K (3216)
RB925	1-233-414-11	s	RESISTOR,CHIP NETWORK 4.7K
RB926	1-233-414-11	s	RESISTOR,CHIP NETWORK 4.7K
RB927	1-239-409-11	s	RESISTOR NETWORK 47 (1608)
RB928	1-239-409-11	s	RESISTOR NETWORK 47 (1608)
RB929	1-239-409-11	s	RESISTOR NETWORK 47 (1608)
RB930	1-239-409-11	s	RESISTOR NETWORK 47 (1608)
RB931	1-233-810-21	s	RES, NETWORK 100K (3216)
RB932	1-239-409-11	s	RESISTOR NETWORK 47 (1608)
RB933	1-239-409-11	s	RESISTOR NETWORK 47 (1608)
RB934	1-239-409-11	s	RESISTOR NETWORK 47 (1608)
RB935	1-239-409-11	s	RESISTOR NETWORK 47 (1608)
RB936	1-239-409-11	s	RESISTOR NETWORK 47 (1608)
RB937	1-239-409-11	s	RESISTOR NETWORK 47 (1608)
RB938	1-239-409-11	s	RESISTOR NETWORK 47 (1608)
RB939	1-239-409-11	s	RESISTOR NETWORK 47 (1608)
RB940	1-239-409-11	s	RESISTOR NETWORK 47 (1608)
RB941	1-233-412-11	s	RESISTOR,CHIP NETWORK 1K
RB942	1-233-412-11	s	RESISTOR,CHIP NETWORK 1K
RB943	1-233-412-11	s	RESISTOR,CHIP NETWORK 1K
RB944	1-233-412-11	s	RESISTOR,CHIP NETWORK 1K
RB945	1-233-412-11	s	RESISTOR,CHIP NETWORK 1K
RB946	1-233-412-11	s	RESISTOR,CHIP NETWORK 1K
RB947	1-239-409-11	s	RESISTOR NETWORK 47 (1608)
RB948	1-239-409-11	s	RESISTOR NETWORK 47 (1608)
RB949	1-239-409-11	s	RESISTOR NETWORK 47 (1608)
RB950	1-233-412-11	s	RESISTOR,CHIP NETWORK 1K
RB951	1-239-409-11	s	RESISTOR NETWORK 47 (1608)
RB952	1-239-409-11	s	RESISTOR NETWORK 47 (1608)
RB963	1-239-409-11	s	RESISTOR NETWORK 47 (1608)
RB966	1-239-409-11	s	RESISTOR NETWORK 47 (1608)
RB967	1-239-409-11	s	RESISTOR NETWORK 47 (1608)
RB968	1-239-409-11	s	RESISTOR NETWORK 47 (1608)
RB969	1-239-409-11	s	RESISTOR NETWORK 47 (1608)
RB977	1-239-409-11	s	RESISTOR NETWORK 47 (1608)
RB979	1-239-409-11	s	RESISTOR NETWORK 47 (1608)
RB980	1-236-908-11	s	RESISTOR,NETWORK 10K (3216)
RB1100	1-233-575-11	s	RES, CHIP NETWORK 22
RB1101	1-233-575-11	s	RES, CHIP NETWORK 22
RB1102	1-233-575-11	s	RES, CHIP NETWORK 22
RB1103	1-233-575-11	s	RES, CHIP NETWORK 22
RB1104	1-233-412-11	s	RESISTOR,CHIP NETWORK 1K
RB1105	1-233-412-11	s	RESISTOR,CHIP NETWORK 1K
RB1106	1-239-409-11	s	RESISTOR NETWORK 47 (1608)
RB1107	1-239-409-11	s	RESISTOR NETWORK 47 (1608)
RB1108	1-239-409-11	s	RESISTOR NETWORK 47 (1608)
RB1109	1-239-409-11	s	RESISTOR NETWORK 47 (1608)
RB1110	1-239-409-11	s	RESISTOR NETWORK 47 (1608)
RB1111	1-233-575-11	s	RES, CHIP NETWORK 22
RB1112	1-233-575-11	s	RES, CHIP NETWORK 22
RB1113	1-233-575-11	s	RES, CHIP NETWORK 22
RV800	1-241-261-41	s	RESISTOR, ADJ, CERMET 1K

(HIF-1 BOARD [SUFFIX 24-] for HDW RECORDER)

Ref. No. or Q'ty	Part No.	SP	Description
RV801	1-241-261-41	s	RESISTOR, ADJ, CERMET 1K
S900	1-692-270-41	s	SWITCH, SLIDE
TP100	1-535-877-22	s	CHIP,CHECKER (TEST POINT)
TP101	1-535-877-22	s	CHIP,CHECKER (TEST POINT)
TP102	1-535-877-22	s	CHIP,CHECKER (TEST POINT)
TP200	1-535-877-22	s	CHIP,CHECKER (TEST POINT)
TP201	1-535-877-22	s	CHIP,CHECKER (TEST POINT)
TP600	1-535-877-22	s	CHIP,CHECKER (TEST POINT)
TP601	1-535-877-22	s	CHIP,CHECKER (TEST POINT)
TP700	1-535-877-22	s	CHIP,CHECKER (TEST POINT)
TP701	1-535-877-22	s	CHIP,CHECKER (TEST POINT)
TP702	1-535-877-22	s	CHIP,CHECKER (TEST POINT)
TP703	1-535-877-22	s	CHIP,CHECKER (TEST POINT)
TP704	1-535-877-22	s	CHIP,CHECKER (TEST POINT)
TP705	1-535-877-22	s	CHIP,CHECKER (TEST POINT)
TP800	1-535-877-22	s	CHIP,CHECKER (TEST POINT)
X800	1-795-677-11	s	OSCILLATOR, CRYSTAL
X801	1-795-676-11	s	OSCILLATOR, CRYSTAL
X802	1-813-002-11	s	OSCILLATOR, CRYSTAL
X803	1-813-001-11	s	OSCILLATOR, CRYSTAL
X804	1-795-671-11	s	OSCILLATOR, CRYSTAL
X805	1-795-670-11	s	OSCILLATOR, CRYSTAL

HIF-1A BOARD [SUFFIX 21] for HDW PLAYER

[Lot No. 261 - 2B2] HDW-M2100/P, A2100

Ref. No. or Q'ty	Part No.	SP	Description
1pc	A-8327-115-B	s	MOUNTED CIRCUIT BOARD, HIF-1A
6pcs	7-682-902-11	s	SCREW +PWH 2.6X5
1pc	3-179-084-01	s	LEVER(R),PRINTED C,BOARD
1pc	3-179-085-01	s	LEVER(L),PRINTED C.BOARD
C54	1-107-826-11	s	CAPACITOR,CHIP CERAMIC 0.1MF
C55	1-107-826-11	s	CAPACITOR,CHIP CERAMIC 0.1MF
C56	1-107-826-11	s	CAPACITOR,CHIP CERAMIC 0.1MF
C57	1-107-826-11	s	CAPACITOR,CHIP CERAMIC 0.1MF
C59	1-107-826-11	s	CAPACITOR,CHIP CERAMIC 0.1MF
C60	1-107-826-11	s	CAPACITOR,CHIP CERAMIC 0.1MF
C61	1-107-826-11	s	CAPACITOR,CHIP CERAMIC 0.1MF
C62	1-107-826-11	s	CAPACITOR,CHIP CERAMIC 0.1MF
C63	1-107-826-11	s	CAPACITOR,CHIP CERAMIC 0.1MF
C64	1-107-826-11	s	CAPACITOR,CHIP CERAMIC 0.1MF
C65	1-107-826-11	s	CAPACITOR,CHIP CERAMIC 0.1MF
C66	1-107-826-11	s	CAPACITOR,CHIP CERAMIC 0.1MF
C67	1-107-826-11	s	CAPACITOR,CHIP CERAMIC 0.1MF
C68	1-107-826-11	s	CAPACITOR,CHIP CERAMIC 0.1MF
C104	1-107-826-11	s	CAPACITOR,CHIP CERAMIC 0.1MF
C105	1-107-826-11	s	CAPACITOR,CHIP CERAMIC 0.1MF
C106	1-107-826-11	s	CAPACITOR,CHIP CERAMIC 0.1MF
C110	1-107-826-11	s	CAPACITOR,CHIP CERAMIC 0.1MF
C111	1-107-826-11	s	CAPACITOR,CHIP CERAMIC 0.1MF
C112	1-107-826-11	s	CAPACITOR,CHIP CERAMIC 0.1MF
C133	1-107-826-11	s	CAPACITOR,CHIP CERAMIC 0.1MF
C134	1-107-826-11	s	CAPACITOR,CHIP CERAMIC 0.1MF
C135	1-107-826-11	s	CAPACITOR,CHIP CERAMIC 0.1MF
C136	1-107-826-11	s	CAPACITOR,CHIP CERAMIC 0.1MF
C137	1-107-826-11	s	CAPACITOR,CHIP CERAMIC 0.1MF
C138	1-107-826-11	s	CAPACITOR,CHIP CERAMIC 0.1MF
C142	1-107-826-11	s	CAPACITOR,CHIP CERAMIC 0.1MF
C200	1-107-826-11	s	CAPACITOR,CHIP CERAMIC 0.1MF
C201	1-107-826-11	s	CAPACITOR,CHIP CERAMIC 0.1MF
C204	1-107-826-11	s	CAPACITOR,CHIP CERAMIC 0.1MF
C207	1-107-826-11	s	CAPACITOR,CHIP CERAMIC 0.1MF
C208	1-107-826-11	s	CAPACITOR,CHIP CERAMIC 0.1MF
C209	1-107-826-11	s	CAPACITOR,CHIP CERAMIC 0.1MF
C210	1-107-826-11	s	CAPACITOR,CHIP CERAMIC 0.1MF
C211	1-107-826-11	s	CAPACITOR,CHIP CERAMIC 0.1MF
C212	1-107-826-11	s	CAPACITOR,CHIP CERAMIC 0.1MF
C213	1-107-826-11	s	CAPACITOR,CHIP CERAMIC 0.1MF
C214	1-107-826-11	s	CAPACITOR,CHIP CERAMIC 0.1MF
C216	1-107-826-11	s	CAPACITOR,CHIP CERAMIC 0.1MF
C217	1-107-826-11	s	CAPACITOR,CHIP CERAMIC 0.1MF
C218	1-107-826-11	s	CAPACITOR,CHIP CERAMIC 0.1MF
C219	1-107-826-11	s	CAPACITOR,CHIP CERAMIC 0.1MF
C220	1-107-826-11	s	CAPACITOR,CHIP CERAMIC 0.1MF
C221	1-107-826-11	s	CAPACITOR,CHIP CERAMIC 0.1MF
C222	1-107-826-11	s	CAPACITOR,CHIP CERAMIC 0.1MF
C223	1-107-826-11	s	CAPACITOR,CHIP CERAMIC 0.1MF
C224	1-107-826-11	s	CAPACITOR,CHIP CERAMIC 0.1MF
C300	1-107-826-11	s	CAPACITOR,CHIP CERAMIC 0.1MF
C301	1-107-826-11	s	CAPACITOR,CHIP CERAMIC 0.1MF
C302	1-107-826-11	s	CAPACITOR,CHIP CERAMIC 0.1MF
C303	1-107-826-11	s	CAPACITOR,CHIP CERAMIC 0.1MF
C304	1-107-826-11	s	CAPACITOR,CHIP CERAMIC 0.1MF

(HIF-1A BOARD [SUFFIX 21] for HDW PLAYER)

Ref. No. or Q'ty	Part No.	SP	Description
C305	1-107-826-11	s	CAPACITOR,CHIP CERAMIC 0.1MF
C306	1-107-826-11	s	CAPACITOR,CHIP CERAMIC 0.1MF
C307	1-107-826-11	s	CAPACITOR,CHIP CERAMIC 0.1MF
C308	1-107-826-11	s	CAPACITOR,CHIP CERAMIC 0.1MF
C309	1-107-826-11	s	CAPACITOR,CHIP CERAMIC 0.1MF
C310	1-107-826-11	s	CAPACITOR,CHIP CERAMIC 0.1MF
C311	1-107-826-11	s	CAPACITOR,CHIP CERAMIC 0.1MF
C312	1-107-826-11	s	CAPACITOR,CHIP CERAMIC 0.1MF
C313	1-107-826-11	s	CAPACITOR,CHIP CERAMIC 0.1MF
C314	1-107-826-11	s	CAPACITOR,CHIP CERAMIC 0.1MF
C315	1-107-826-11	s	CAPACITOR,CHIP CERAMIC 0.1MF
C316	1-107-826-11	s	CAPACITOR,CHIP CERAMIC 0.1MF
C317	1-164-227-11	s	CAPACITOR,CERAMIC 0.022MF/25V
C318	1-107-826-11	s	CAPACITOR,CHIP CERAMIC 0.1MF
C319	1-107-826-11	s	CAPACITOR,CHIP CERAMIC 0.1MF
C320	1-107-826-11	s	CAPACITOR,CHIP CERAMIC 0.1MF
C321	1-107-826-11	s	CAPACITOR,CHIP CERAMIC 0.1MF
C322	1-107-826-11	s	CAPACITOR,CHIP CERAMIC 0.1MF
C323	1-107-826-11	s	CAPACITOR,CHIP CERAMIC 0.1MF
C324	1-107-826-11	s	CAPACITOR,CHIP CERAMIC 0.1MF
C325	1-107-826-11	s	CAPACITOR,CHIP CERAMIC 0.1MF
C326	1-107-826-11	s	CAPACITOR,CHIP CERAMIC 0.1MF
C327	1-107-826-11	s	CAPACITOR,CHIP CERAMIC 0.1MF
C328	1-107-826-11	s	CAPACITOR,CHIP CERAMIC 0.1MF
C329	1-107-826-11	s	CAPACITOR,CHIP CERAMIC 0.1MF
C330	1-107-826-11	s	CAPACITOR,CHIP CERAMIC 0.1MF
C331	1-107-826-11	s	CAPACITOR,CHIP CERAMIC 0.1MF
C332	1-107-826-11	s	CAPACITOR,CHIP CERAMIC 0.1MF
C333	1-107-826-11	s	CAPACITOR,CHIP CERAMIC 0.1MF
C334	1-107-826-11	s	CAPACITOR,CHIP CERAMIC 0.1MF
C335	1-107-826-11	s	CAPACITOR,CHIP CERAMIC 0.1MF
C336	1-107-826-11	s	CAPACITOR,CHIP CERAMIC 0.1MF
C337	1-107-826-11	s	CAPACITOR,CHIP CERAMIC 0.1MF
C338	1-107-826-11	s	CAPACITOR,CHIP CERAMIC 0.1MF
C339	1-107-826-11	s	CAPACITOR,CHIP CERAMIC 0.1MF
C340	1-107-826-11	s	CAPACITOR,CHIP CERAMIC 0.1MF
C341	1-107-826-11	s	CAPACITOR,CHIP CERAMIC 0.1MF
C342	1-107-826-11	s	CAPACITOR,CHIP CERAMIC 0.1MF
C343	1-107-826-11	s	CAPACITOR,CHIP CERAMIC 0.1MF
C344	1-107-826-11	s	CAPACITOR,CHIP CERAMIC 0.1MF
C345	1-107-826-11	s	CAPACITOR,CHIP CERAMIC 0.1MF
C346	1-107-826-11	s	CAPACITOR,CHIP CERAMIC 0.1MF
C347	1-128-707-11	s	CAPACITOR,POLYPYRROLE 220MF
C348	1-128-707-11	s	CAPACITOR,POLYPYRROLE 220MF
C400	1-107-826-11	s	CAPACITOR,CHIP CERAMIC 0.1MF
C401	1-107-826-11	s	CAPACITOR,CHIP CERAMIC 0.1MF
C402	1-107-826-11	s	CAPACITOR,CHIP CERAMIC 0.1MF
C403	1-107-826-11	s	CAPACITOR,CHIP CERAMIC 0.1MF
C404	1-107-826-11	s	CAPACITOR,CHIP CERAMIC 0.1MF
C405	1-107-826-11	s	CAPACITOR,CHIP CERAMIC 0.1MF
C406	1-107-826-11	s	CAPACITOR,CHIP CERAMIC 0.1MF
C407	1-107-826-11	s	CAPACITOR,CHIP CERAMIC 0.1MF
C408	1-107-826-11	s	CAPACITOR,CHIP CERAMIC 0.1MF
C409	1-107-826-11	s	CAPACITOR,CHIP CERAMIC 0.1MF
C410	1-107-826-11	s	CAPACITOR,CHIP CERAMIC 0.1MF
C411	1-107-826-11	s	CAPACITOR,CHIP CERAMIC 0.1MF
C412	1-107-826-11	s	CAPACITOR,CHIP CERAMIC 0.1MF
C413	1-107-826-11	s	CAPACITOR,CHIP CERAMIC 0.1MF
C414	1-107-826-11	s	CAPACITOR,CHIP CERAMIC 0.1MF

(HIF-1A BOARD [SUFFIX 21] for HDW PLAYER)

Ref. No. or Q'ty	Part No.	SP	Description
C415	1-107-826-11	s	CAPACITOR,CHIP CERAMIC 0.1MF
C416	1-107-826-11	s	CAPACITOR,CHIP CERAMIC 0.1MF
C417	1-107-826-11	s	CAPACITOR,CHIP CERAMIC 0.1MF
C418	1-107-826-11	s	CAPACITOR,CHIP CERAMIC 0.1MF
C419	1-107-826-11	s	CAPACITOR,CHIP CERAMIC 0.1MF
C420	1-107-826-11	s	CAPACITOR,CHIP CERAMIC 0.1MF
C421	1-107-826-11	s	CAPACITOR,CHIP CERAMIC 0.1MF
C422	1-107-826-11	s	CAPACITOR,CHIP CERAMIC 0.1MF
C423	1-107-826-11	s	CAPACITOR,CHIP CERAMIC 0.1MF
C424	1-107-826-11	s	CAPACITOR,CHIP CERAMIC 0.1MF
C425	1-107-826-11	s	CAPACITOR,CHIP CERAMIC 0.1MF
C426	1-107-826-11	s	CAPACITOR,CHIP CERAMIC 0.1MF
C427	1-107-826-11	s	CAPACITOR,CHIP CERAMIC 0.1MF
C428	1-107-826-11	s	CAPACITOR,CHIP CERAMIC 0.1MF
C429	1-107-826-11	s	CAPACITOR,CHIP CERAMIC 0.1MF
C430	1-107-826-11	s	CAPACITOR,CHIP CERAMIC 0.1MF
C431	1-107-826-11	s	CAPACITOR,CHIP CERAMIC 0.1MF
C432	1-107-826-11	s	CAPACITOR,CHIP CERAMIC 0.1MF
C433	1-107-826-11	s	CAPACITOR,CHIP CERAMIC 0.1MF
C434	1-107-826-11	s	CAPACITOR,CHIP CERAMIC 0.1MF
C435	1-107-826-11	s	CAPACITOR,CHIP CERAMIC 0.1MF
C436	1-107-826-11	s	CAPACITOR,CHIP CERAMIC 0.1MF
C437	1-107-826-11	s	CAPACITOR,CHIP CERAMIC 0.1MF
C438	1-107-826-11	s	CAPACITOR,CHIP CERAMIC 0.1MF
C439	1-107-826-11	s	CAPACITOR,CHIP CERAMIC 0.1MF
C440	1-107-826-11	s	CAPACITOR,CHIP CERAMIC 0.1MF
C441	1-107-826-11	s	CAPACITOR,CHIP CERAMIC 0.1MF
C442	1-107-826-11	s	CAPACITOR,CHIP CERAMIC 0.1MF
C443	1-107-826-11	s	CAPACITOR,CHIP CERAMIC 0.1MF
C444	1-107-826-11	s	CAPACITOR,CHIP CERAMIC 0.1MF
C500	1-107-826-11	s	CAPACITOR,CHIP CERAMIC 0.1MF
C501	1-107-826-11	s	CAPACITOR,CHIP CERAMIC 0.1MF
C502	1-107-826-11	s	CAPACITOR,CHIP CERAMIC 0.1MF
C503	1-107-826-11	s	CAPACITOR,CHIP CERAMIC 0.1MF
C504	1-107-826-11	s	CAPACITOR,CHIP CERAMIC 0.1MF
C505	1-107-826-11	s	CAPACITOR,CHIP CERAMIC 0.1MF
C506	1-107-826-11	s	CAPACITOR,CHIP CERAMIC 0.1MF
C507	1-107-826-11	s	CAPACITOR,CHIP CERAMIC 0.1MF
C508	1-107-826-11	s	CAPACITOR,CHIP CERAMIC 0.1MF
C509	1-107-826-11	s	CAPACITOR,CHIP CERAMIC 0.1MF
C510	1-107-826-11	s	CAPACITOR,CHIP CERAMIC 0.1MF
C511	1-107-826-11	s	CAPACITOR,CHIP CERAMIC 0.1MF
C512	1-107-826-11	s	CAPACITOR,CHIP CERAMIC 0.1MF
C513	1-107-826-11	s	CAPACITOR,CHIP CERAMIC 0.1MF
C514	1-107-826-11	s	CAPACITOR,CHIP CERAMIC 0.1MF
C515	1-107-826-11	s	CAPACITOR,CHIP CERAMIC 0.1MF
C516	1-107-826-11	s	CAPACITOR,CHIP CERAMIC 0.1MF
C517	1-107-826-11	s	CAPACITOR,CHIP CERAMIC 0.1MF
C518	1-107-826-11	s	CAPACITOR,CHIP CERAMIC 0.1MF
C519	1-107-826-11	s	CAPACITOR,CHIP CERAMIC 0.1MF
C520	1-107-826-11	s	CAPACITOR,CHIP CERAMIC 0.1MF
C521	1-107-826-11	s	CAPACITOR,CHIP CERAMIC 0.1MF
C522	1-107-826-11	s	CAPACITOR,CHIP CERAMIC 0.1MF
C523	1-107-826-11	s	CAPACITOR,CHIP CERAMIC 0.1MF
C524	1-107-826-11	s	CAPACITOR,CHIP CERAMIC 0.1MF
C525	1-107-826-11	s	CAPACITOR,CHIP CERAMIC 0.1MF
C526	1-107-826-11	s	CAPACITOR,CHIP CERAMIC 0.1MF
C527	1-107-826-11	s	CAPACITOR,CHIP CERAMIC 0.1MF
C528	1-107-826-11	s	CAPACITOR,CHIP CERAMIC 0.1MF

(HIF-1A BOARD [SUFFIX 21] for HDW PLAYER)

Ref. No. or Q'ty	Part No.	SP	Description
C529	1-107-826-11	s	CAPACITOR,CHIP CERAMIC 0.1MF
C530	1-107-826-11	s	CAPACITOR,CHIP CERAMIC 0.1MF
C531	1-107-826-11	s	CAPACITOR,CHIP CERAMIC 0.1MF
C532	1-107-826-11	s	CAPACITOR,CHIP CERAMIC 0.1MF
C533	1-107-826-11	s	CAPACITOR,CHIP CERAMIC 0.1MF
C534	1-107-826-11	s	CAPACITOR,CHIP CERAMIC 0.1MF
C535	1-107-826-11	s	CAPACITOR,CHIP CERAMIC 0.1MF
C536	1-107-826-11	s	CAPACITOR,CHIP CERAMIC 0.1MF
C537	1-107-826-11	s	CAPACITOR,CHIP CERAMIC 0.1MF
C600	1-107-826-11	s	CAPACITOR,CHIP CERAMIC 0.1MF
C601	1-107-826-11	s	CAPACITOR,CHIP CERAMIC 0.1MF
C602	1-107-826-11	s	CAPACITOR,CHIP CERAMIC 0.1MF
C603	1-107-826-11	s	CAPACITOR,CHIP CERAMIC 0.1MF
C604	1-107-826-11	s	CAPACITOR,CHIP CERAMIC 0.1MF
C605	1-107-826-11	s	CAPACITOR,CHIP CERAMIC 0.1MF
C606	1-107-826-11	s	CAPACITOR,CHIP CERAMIC 0.1MF
C607	1-107-826-11	s	CAPACITOR,CHIP CERAMIC 0.1MF
C608	1-107-826-11	s	CAPACITOR,CHIP CERAMIC 0.1MF
C609	1-107-826-11	s	CAPACITOR,CHIP CERAMIC 0.1MF
C610	1-107-826-11	s	CAPACITOR,CHIP CERAMIC 0.1MF
C611	1-107-826-11	s	CAPACITOR,CHIP CERAMIC 0.1MF
C612	1-107-826-11	s	CAPACITOR,CHIP CERAMIC 0.1MF
C613	1-107-826-11	s	CAPACITOR,CHIP CERAMIC 0.1MF
C614	1-107-826-11	s	CAPACITOR,CHIP CERAMIC 0.1MF
C615	1-128-707-11	s	CAPACITOR,POLYPYRROLE 220MF
C616	1-131-603-11	s	CAP, POLYPYRROLE 100MF
C617	1-107-826-11	s	CAPACITOR,CHIP CERAMIC 0.1MF
C618	1-107-826-11	s	CAPACITOR,CHIP CERAMIC 0.1MF
C619	1-107-826-11	s	CAPACITOR,CHIP CERAMIC 0.1MF
C620	1-107-826-11	s	CAPACITOR,CHIP CERAMIC 0.1MF
C621	1-107-826-11	s	CAPACITOR,CHIP CERAMIC 0.1MF
C622	1-107-826-11	s	CAPACITOR,CHIP CERAMIC 0.1MF
C623	1-107-826-11	s	CAPACITOR,CHIP CERAMIC 0.1MF
C624	1-107-826-11	s	CAPACITOR,CHIP CERAMIC 0.1MF
C625	1-107-826-11	s	CAPACITOR,CHIP CERAMIC 0.1MF
C626	1-107-826-11	s	CAPACITOR,CHIP CERAMIC 0.1MF
C627	1-107-826-11	s	CAPACITOR,CHIP CERAMIC 0.1MF
C628	1-107-826-11	s	CAPACITOR,CHIP CERAMIC 0.1MF
C629	1-107-826-11	s	CAPACITOR,CHIP CERAMIC 0.1MF
C630	1-107-826-11	s	CAPACITOR,CHIP CERAMIC 0.1MF
C631	1-107-826-11	s	CAPACITOR,CHIP CERAMIC 0.1MF
C632	1-107-826-11	s	CAPACITOR,CHIP CERAMIC 0.1MF
C633	1-107-826-11	s	CAPACITOR,CHIP CERAMIC 0.1MF
C634	1-107-826-11	s	CAPACITOR,CHIP CERAMIC 0.1MF
C635	1-107-826-11	s	CAPACITOR,CHIP CERAMIC 0.1MF
C636	1-107-826-11	s	CAPACITOR,CHIP CERAMIC 0.1MF
C637	1-107-826-11	s	CAPACITOR,CHIP CERAMIC 0.1MF
C638	1-107-826-11	s	CAPACITOR,CHIP CERAMIC 0.1MF
C639	1-107-826-11	s	CAPACITOR,CHIP CERAMIC 0.1MF
C700	1-107-826-11	s	CAPACITOR,CHIP CERAMIC 0.1MF
C701	1-107-826-11	s	CAPACITOR,CHIP CERAMIC 0.1MF
C702	1-107-826-11	s	CAPACITOR,CHIP CERAMIC 0.1MF
C703	1-162-919-11	s	CAPACITOR,CERAMIC 22PF/50V CH
C704	1-162-928-11	s	CAPACITOR,CERAMIC 120PF/50V CH
C705	1-107-826-11	s	CAPACITOR,CHIP CERAMIC 0.1MF
C706	1-125-891-11	s	CAPACITOR CERAMIC 0.47MF/10V
C707	1-125-891-11	s	CAPACITOR CERAMIC 0.47MF/10V
C708	1-107-826-11	s	CAPACITOR,CHIP CERAMIC 0.1MF
C709	1-107-826-11	s	CAPACITOR,CHIP CERAMIC 0.1MF

(HIF-1A BOARD [SUFFIX 21] for HDW PLAYER)

Ref. No. or Q'ty	Part No.	SP	Description
C710	1-107-826-11	s	CAPACITOR,CHIP CERAMIC 0.1MF
C711	1-162-928-11	s	CAPACITOR,CERAMIC 120PF/50V CH
C712	1-107-826-11	s	CAPACITOR,CHIP CERAMIC 0.1MF
C713	1-107-826-11	s	CAPACITOR,CHIP CERAMIC 0.1MF
C714	1-107-826-11	s	CAPACITOR,CHIP CERAMIC 0.1MF
C715	1-107-826-11	s	CAPACITOR,CHIP CERAMIC 0.1MF
C716	1-107-826-11	s	CAPACITOR,CHIP CERAMIC 0.1MF
C717	1-107-826-11	s	CAPACITOR,CHIP CERAMIC 0.1MF
C718	1-162-924-11	s	CAPACITOR,CERAMIC 56PF/50V CH
C719	1-107-826-11	s	CAPACITOR,CHIP CERAMIC 0.1MF
C720	1-162-928-11	s	CAPACITOR,CERAMIC 120PF/50V CH
C721	1-107-826-11	s	CAPACITOR,CHIP CERAMIC 0.1MF
C722	1-107-826-11	s	CAPACITOR,CHIP CERAMIC 0.1MF
C723	1-162-928-11	s	CAPACITOR,CERAMIC 120PF/50V CH
C724	1-107-826-11	s	CAPACITOR,CHIP CERAMIC 0.1MF
C725	1-107-826-11	s	CAPACITOR,CHIP CERAMIC 0.1MF
C726	1-107-826-11	s	CAPACITOR,CHIP CERAMIC 0.1MF
C727	1-107-826-11	s	CAPACITOR,CHIP CERAMIC 0.1MF
C733	1-107-826-11	s	CAPACITOR,CHIP CERAMIC 0.1MF
C734	1-107-826-11	s	CAPACITOR,CHIP CERAMIC 0.1MF
C735	1-107-826-11	s	CAPACITOR,CHIP CERAMIC 0.1MF
C736	1-107-826-11	s	CAPACITOR,CHIP CERAMIC 0.1MF
C737	1-107-826-11	s	CAPACITOR,CHIP CERAMIC 0.1MF
C738	1-107-826-11	s	CAPACITOR,CHIP CERAMIC 0.1MF
C745	1-107-826-11	s	CAPACITOR,CHIP CERAMIC 0.1MF
C746	1-107-826-11	s	CAPACITOR,CHIP CERAMIC 0.1MF
C747	1-107-826-11	s	CAPACITOR,CHIP CERAMIC 0.1MF
C748	1-107-826-11	s	CAPACITOR,CHIP CERAMIC 0.1MF
C749	1-104-851-11	s	CAPACITOR,TANTALUM 10MF/10V
C750	1-107-826-11	s	CAPACITOR,CHIP CERAMIC 0.1MF
C751	1-107-826-11	s	CAPACITOR,CHIP CERAMIC 0.1MF
C800	1-128-707-11	s	CAPACITOR,POLYPYRROLE 220MF
C801	1-131-603-11	s	CAP, POLYPYRROLE 100MF
C802	1-107-826-11	s	CAPACITOR,CHIP CERAMIC 0.1MF
C803	1-107-826-11	s	CAPACITOR,CHIP CERAMIC 0.1MF
C804	1-107-826-11	s	CAPACITOR,CHIP CERAMIC 0.1MF
C805	1-107-826-11	s	CAPACITOR,CHIP CERAMIC 0.1MF
C806	1-107-826-11	s	CAPACITOR,CHIP CERAMIC 0.1MF
C807	1-107-826-11	s	CAPACITOR,CHIP CERAMIC 0.1MF
C808	1-107-826-11	s	CAPACITOR,CHIP CERAMIC 0.1MF
C809	1-107-826-11	s	CAPACITOR,CHIP CERAMIC 0.1MF
C810	1-107-826-11	s	CAPACITOR,CHIP CERAMIC 0.1MF
C811	1-107-826-11	s	CAPACITOR,CHIP CERAMIC 0.1MF
C812	1-107-826-11	s	CAPACITOR,CHIP CERAMIC 0.1MF
C813	1-107-826-11	s	CAPACITOR,CHIP CERAMIC 0.1MF
C814	1-107-826-11	s	CAPACITOR,CHIP CERAMIC 0.1MF
C815	1-107-826-11	s	CAPACITOR,CHIP CERAMIC 0.1MF
C816	1-107-826-11	s	CAPACITOR,CHIP CERAMIC 0.1MF
C817	1-107-826-11	s	CAPACITOR,CHIP CERAMIC 0.1MF
C818	1-107-826-11	s	CAPACITOR,CHIP CERAMIC 0.1MF
C819	1-107-826-11	s	CAPACITOR,CHIP CERAMIC 0.1MF
C820	1-107-826-11	s	CAPACITOR,CHIP CERAMIC 0.1MF
C821	1-107-826-11	s	CAPACITOR,CHIP CERAMIC 0.1MF
C822	1-107-826-11	s	CAPACITOR,CHIP CERAMIC 0.1MF
C823	1-107-826-11	s	CAPACITOR,CHIP CERAMIC 0.1MF
C824	1-107-826-11	s	CAPACITOR,CHIP CERAMIC 0.1MF
C825	1-107-826-11	s	CAPACITOR,CHIP CERAMIC 0.1MF
C826	1-107-826-11	s	CAPACITOR,CHIP CERAMIC 0.1MF
C827	1-107-826-11	s	CAPACITOR,CHIP CERAMIC 0.1MF

(HIF-1A BOARD [SUFFIX 21] for HDW PLAYER)

Ref. No. or Q'ty	Part No.	SP	Description
C828	1-107-826-11	s	CAPACITOR,CHIP CERAMIC 0.1MF
C829	1-107-826-11	s	CAPACITOR,CHIP CERAMIC 0.1MF
C830	1-107-826-11	s	CAPACITOR,CHIP CERAMIC 0.1MF
C831	1-107-826-11	s	CAPACITOR,CHIP CERAMIC 0.1MF
C832	1-107-826-11	s	CAPACITOR,CHIP CERAMIC 0.1MF
C833	1-127-950-11	s	CAPACITOR,CHIP FILM 0.01MF
C834	1-107-826-11	s	CAPACITOR,CHIP CERAMIC 0.1MF
C835	1-127-950-11	s	CAPACITOR,CHIP FILM 0.01MF
C836	1-127-950-11	s	CAPACITOR,CHIP FILM 0.01MF
C837	1-127-956-11	s	CAPACITOR,CHIP FILM 0.1MF
C838	1-107-826-11	s	CAPACITOR,CHIP CERAMIC 0.1MF
C839	1-127-956-11	s	CAPACITOR,CHIP FILM 0.1MF
C840	1-127-956-11	s	CAPACITOR,CHIP FILM 0.1MF
C841	1-107-826-11	s	CAPACITOR,CHIP CERAMIC 0.1MF
C842	1-107-826-11	s	CAPACITOR,CHIP CERAMIC 0.1MF
C843	1-107-826-11	s	CAPACITOR,CHIP CERAMIC 0.1MF
C844	1-107-826-11	s	CAPACITOR,CHIP CERAMIC 0.1MF
C845	1-107-826-11	s	CAPACITOR,CHIP CERAMIC 0.1MF
C846	1-107-826-11	s	CAPACITOR,CHIP CERAMIC 0.1MF
C847	1-107-826-11	s	CAPACITOR,CHIP CERAMIC 0.1MF
C848	1-107-826-11	s	CAPACITOR,CHIP CERAMIC 0.1MF
C849	1-107-826-11	s	CAPACITOR,CHIP CERAMIC 0.1MF
C850	1-107-826-11	s	CAPACITOR,CHIP CERAMIC 0.1MF
C851	1-107-826-11	s	CAPACITOR,CHIP CERAMIC 0.1MF
C852	1-107-826-11	s	CAPACITOR,CHIP CERAMIC 0.1MF
C853	1-107-826-11	s	CAPACITOR,CHIP CERAMIC 0.1MF
C854	1-107-826-11	s	CAPACITOR,CHIP CERAMIC 0.1MF
C855	1-107-826-11	s	CAPACITOR,CHIP CERAMIC 0.1MF
C856	1-107-826-11	s	CAPACITOR,CHIP CERAMIC 0.1MF
C857	1-107-826-11	s	CAPACITOR,CHIP CERAMIC 0.1MF
C858	1-107-826-11	s	CAPACITOR,CHIP CERAMIC 0.1MF
C859	1-107-826-11	s	CAPACITOR,CHIP CERAMIC 0.1MF
C860	1-107-826-11	s	CAPACITOR,CHIP CERAMIC 0.1MF
C861	1-107-826-11	s	CAPACITOR,CHIP CERAMIC 0.1MF
C862	1-107-826-11	s	CAPACITOR,CHIP CERAMIC 0.1MF
C863	1-107-826-11	s	CAPACITOR,CHIP CERAMIC 0.1MF
C864	1-107-826-11	s	CAPACITOR,CHIP CERAMIC 0.1MF
C865	1-107-826-11	s	CAPACITOR,CHIP CERAMIC 0.1MF
C866	1-104-851-11	s	CAPACITOR,TANTALUM 10MF/10V
C867	1-107-826-11	s	CAPACITOR,CHIP CERAMIC 0.1MF
C870	1-127-950-11	s	CAPACITOR,CHIP FILM 0.01MF
C871	1-127-956-11	s	CAPACITOR,CHIP FILM 0.1MF
C872	1-107-826-11	s	CAPACITOR,CHIP CERAMIC 0.1MF
C873	1-107-826-11	s	CAPACITOR,CHIP CERAMIC 0.1MF
C874	1-107-826-11	s	CAPACITOR,CHIP CERAMIC 0.1MF
C875	1-107-826-11	s	CAPACITOR,CHIP CERAMIC 0.1MF
C880	1-162-923-11	s	CAPACITOR,CERAMIC 47PF/50V CH
C881	1-162-970-11	s	CAPACITOR CERAMIC 0.01MF/25V B
C882	1-107-826-11	s	CAPACITOR,CHIP CERAMIC 0.1MF
C883	1-162-927-11	s	CAPACITOR,CERAMIC 100PF/50V CH
C884	1-162-923-11	s	CAPACITOR,CERAMIC 47PF/50V CH
C885	1-107-826-11	s	CAPACITOR,CHIP CERAMIC 0.1MF
C886	1-107-826-11	s	CAPACITOR,CHIP CERAMIC 0.1MF
C900	1-162-970-11	s	CAPACITOR CERAMIC 0.01MF/25V B
C902	1-107-826-11	s	CAPACITOR,CHIP CERAMIC 0.1MF
C903	1-107-826-11	s	CAPACITOR,CHIP CERAMIC 0.1MF
C904	1-107-826-11	s	CAPACITOR,CHIP CERAMIC 0.1MF
C905	1-107-826-11	s	CAPACITOR,CHIP CERAMIC 0.1MF
C907	1-107-826-11	s	CAPACITOR,CHIP CERAMIC 0.1MF

(HIF-1A BOARD [SUFFIX 21] for HDW PLAYER)

Ref. No. or Q'ty	Part No.	SP	Description
C908	1-107-826-11	s	CAPACITOR,CHIP CERAMIC 0.1MF
C909	1-107-826-11	s	CAPACITOR,CHIP CERAMIC 0.1MF
C910	1-162-970-11	s	CAPACITOR CERAMIC 0.01MF/25V B
C911	1-107-826-11	s	CAPACITOR,CHIP CERAMIC 0.1MF
C912	1-107-826-11	s	CAPACITOR,CHIP CERAMIC 0.1MF
C913	1-107-826-11	s	CAPACITOR,CHIP CERAMIC 0.1MF
C914	1-107-826-11	s	CAPACITOR,CHIP CERAMIC 0.1MF
C915	1-107-826-11	s	CAPACITOR,CHIP CERAMIC 0.1MF
C916	1-107-826-11	s	CAPACITOR,CHIP CERAMIC 0.1MF
C917	1-107-826-11	s	CAPACITOR,CHIP CERAMIC 0.1MF
C918	1-107-826-11	s	CAPACITOR,CHIP CERAMIC 0.1MF
C919	1-107-826-11	s	CAPACITOR,CHIP CERAMIC 0.1MF
C920	1-107-826-11	s	CAPACITOR,CHIP CERAMIC 0.1MF
C921	1-107-826-11	s	CAPACITOR,CHIP CERAMIC 0.1MF
C922	1-107-826-11	s	CAPACITOR,CHIP CERAMIC 0.1MF
C923	1-107-826-11	s	CAPACITOR,CHIP CERAMIC 0.1MF
C924	1-107-826-11	s	CAPACITOR,CHIP CERAMIC 0.1MF
C925	1-162-927-11	s	CAPACITOR,CERAMIC 100PF/50V CH
C926	1-162-927-11	s	CAPACITOR,CERAMIC 100PF/50V CH
C927	1-162-927-11	s	CAPACITOR,CERAMIC 100PF/50V CH
C1000	1-131-603-11	s	CAP, POLYPYRROLE 100MF
C1001	1-131-603-11	s	CAP, POLYPYRROLE 100MF
C1002	1-131-603-11	s	CAP, POLYPYRROLE 100MF
C1003	1-107-826-11	s	CAPACITOR,CHIP CERAMIC 0.1MF
C1004	1-107-826-11	s	CAPACITOR,CHIP CERAMIC 0.1MF
C1005	1-107-826-11	s	CAPACITOR,CHIP CERAMIC 0.1MF
C1006	1-107-826-11	s	CAPACITOR,CHIP CERAMIC 0.1MF
C1007	1-107-826-11	s	CAPACITOR,CHIP CERAMIC 0.1MF
C1008	1-107-826-11	s	CAPACITOR,CHIP CERAMIC 0.1MF
C1009	1-107-826-11	s	CAPACITOR,CHIP CERAMIC 0.1MF
C1010	1-107-826-11	s	CAPACITOR,CHIP CERAMIC 0.1MF
C1011	1-107-826-11	s	CAPACITOR,CHIP CERAMIC 0.1MF
C1012	1-107-826-11	s	CAPACITOR,CHIP CERAMIC 0.1MF
C1013	1-131-603-11	s	CAP, POLYPYRROLE 100MF
C1014	1-131-603-11	s	CAP, POLYPYRROLE 100MF
C1015	1-131-603-11	s	CAP, POLYPYRROLE 100MF
C1016	1-131-603-11	s	CAP, POLYPYRROLE 100MF
C1017	1-131-603-11	s	CAP, POLYPYRROLE 100MF
C1019	1-131-603-11	s	CAP, POLYPYRROLE 100MF
C1022	1-162-970-11	s	CAPACITOR CERAMIC 0.01MF/25V B
C1025	1-107-826-11	s	CAPACITOR,CHIP CERAMIC 0.1MF
C1026	1-107-826-11	s	CAPACITOR,CHIP CERAMIC 0.1MF
C1029	1-115-416-11	s	CAPACITOR,CERAMIC 1000PF/25V
C1031	1-107-826-11	s	CAPACITOR,CHIP CERAMIC 0.1MF
C1032	1-107-826-11	s	CAPACITOR,CHIP CERAMIC 0.1MF
C1033	1-109-994-11	s	CAPACITOR,CHIP CERAMIC 2.2MF B
C1034	1-107-826-11	s	CAPACITOR,CHIP CERAMIC 0.1MF
C1035	1-109-994-11	s	CAPACITOR,CHIP CERAMIC 2.2MF B
C1037	1-115-416-11	s	CAPACITOR,CERAMIC 1000PF/25V
C1038	1-162-970-11	s	CAPACITOR CERAMIC 0.01MF/25V B
C1060	1-107-826-11	s	CAPACITOR,CHIP CERAMIC 0.1MF
C1061	1-107-826-11	s	CAPACITOR,CHIP CERAMIC 0.1MF
C1062	1-107-826-11	s	CAPACITOR,CHIP CERAMIC 0.1MF
C1063	1-107-826-11	s	CAPACITOR,CHIP CERAMIC 0.1MF
C1064	1-131-603-11	s	CAP, POLYPYRROLE 100MF
C1065	1-131-603-11	s	CAP, POLYPYRROLE 100MF
C1066	1-131-603-11	s	CAP, POLYPYRROLE 100MF
C1067	1-107-826-11	s	CAPACITOR,CHIP CERAMIC 0.1MF

(HIF-1A BOARD [SUFFIX 21] for HDW PLAYER)

Ref. No. or Q'ty	Part No.	SP	Description
CN900	1-580-756-21	o	PIN, CONNECTOR 7P
D700	8-719-820-41	s	DIODE 1SS302
D1000	8-719-066-98	s	DIODE RB051L-40
D1001	8-719-938-75	s	DIODE SB05-05CP (RECTI)
D1002	8-719-938-75	s	DIODE SB05-05CP (RECTI)
D1003	8-719-066-98	s	DIODE RB051L-40
F1000	⚠ 1-576-270-11	s	FUSE CHIP 4A/125V (6125)
F1001	⚠ 1-576-270-11	s	FUSE CHIP 4A/125V (6125)
IC50	8-759-392-77	s	IC SN74LVC245APW (E20)
IC51	8-759-392-77	s	IC SN74LVC245APW (E20)
IC52	8-759-549-15	s	IC SN74LV245APWR
IC53	8-759-549-15	s	IC SN74LV245APWR
IC54	8-759-549-15	s	IC SN74LV245APWR
IC55	8-759-293-90	s	IC MSM514221B-30JS
IC56	8-759-549-15	s	IC SN74LV245APWR
IC58	6-801-208-01	o	IC EPC2LC20-HIF-IC58-V1.00
IC59	8-759-293-90	s	IC MSM514221B-30JS
IC60	8-759-293-90	s	IC MSM514221B-30JS
IC100	8-759-475-46	s	IC TC74LCX240FT(EL)
IC101	8-759-491-46	s	IC TC74VHCT04AFT (EL)
IC107	8-759-712-32	s	IC SN65LVDS389DBTR
IC108	8-759-712-32	s	IC SN65LVDS389DBTR
IC109	8-759-712-32	s	IC SN65LVDS389DBTR
IC113	8-759-639-85	s	IC SN65LVDS31DR
IC114	8-759-598-13	s	IC CDC2510CPWR
IC115	8-759-592-44	s	IC TC7SZ04FU(TE85R)
IC119	8-759-694-36	s	IC SN74CBTLV3257PWR
IC200	8-759-712-31	s	IC SN65LVDT388DBTR
IC201	8-759-712-31	s	IC SN65LVDT388DBTR
IC206	8-759-598-13	s	IC CDC2510CPWR
IC207	8-759-592-44	s	IC TC7SZ04FU(TE85R)
IC208	8-759-389-48	s	IC 74LCX16374MTDX
IC209	8-759-389-48	s	IC 74LCX16374MTDX
IC210	8-759-598-13	s	IC CDC2510CPWR
IC211	6-701-499-01	s	IC SN74LVC821APWR
IC212	6-701-499-01	s	IC SN74LVC821APWR
IC213	6-701-499-01	s	IC SN74LVC821APWR
IC215	8-759-592-44	s	IC TC7SZ04FU(TE85R)
IC216	8-759-475-55	s	IC TC74LCX574FT(EL)
IC217	8-759-475-55	s	IC TC74LCX574FT(EL)
IC218	8-759-475-55	s	IC TC74LCX574FT(EL)
IC219	8-759-271-86	s	IC TC7SH04FU
IC220	6-700-238-01	s	IC SN74ALVC245PWR
IC221	6-700-238-01	s	IC SN74ALVC245PWR
IC222	6-700-238-01	s	IC SN74ALVC245PWR
IC223	8-759-271-86	s	IC TC7SH04FU
IC224	8-759-712-31	s	IC SN65LVDT388DBTR
IC300	8-759-549-15	s	IC SN74LV245APWR
IC301	6-701-016-01	s	IC HY57V653220BTC-7-A-TR
IC302	6-701-016-01	s	IC HY57V653220BTC-7-A-TR
IC303	6-701-016-01	s	IC HY57V653220BTC-7-A-TR
IC304	6-701-016-01	s	IC HY57V653220BTC-7-A-TR
IC305	8-759-592-47	s	IC TC7SZ08FU(TE85R)
IC400	8-759-592-44	s	IC TC7SZ04FU(TE85R)
IC402	8-759-491-51	s	IC TC74VHCT245AFT(EL)
IC403	8-759-539-53	s	IC MB90096PF-G-139-BND(ER)
IC404	8-759-392-77	s	IC SN74LVC245APW (E20)
IC405	8-759-647-49	s	IC AL422B-TEL

(HIF-1A BOARD [SUFFIX 21] for HDW PLAYER)

Ref. No. or Q'ty	Part No.	SP	Description
IC406	8-759-647-49	s	IC AL422B-TEL
IC407	8-759-647-49	s	IC AL422B-TEL
IC409	8-759-389-48	s	IC 74LCX16374MTDX
IC410	8-759-389-48	s	IC 74LCX16374MTDX
IC411	8-759-389-48	s	IC 74LCX16374MTDX
IC412	8-759-647-49	s	IC AL422B-TEL
IC413	8-759-647-49	s	IC AL422B-TEL
IC414	8-759-647-49	s	IC AL422B-TEL
IC415	8-759-271-86	s	IC TC7SH04FU
IC416	8-759-196-96	s	IC TC7SH08FU (TE85R)
IC417	8-759-475-35	s	IC TC74LCX04FT(EL)
IC418	8-759-651-59	s	IC SN74CBTLV3245APWR
IC419	8-759-651-59	s	IC SN74CBTLV3245APWR
IC420	8-759-651-59	s	IC SN74CBTLV3245APWR
IC601	6-701-016-01	s	IC HY57V653220BTC-7-A-TR
IC602	8-759-392-77	s	IC SN74LVC245APW (E20)
IC603	8-759-392-77	s	IC SN74LVC245APW (E20)
IC604	8-759-392-77	s	IC SN74LVC245APW (E20)
IC605	8-759-271-86	s	IC TC7SH04FU
IC606	8-759-392-77	s	IC SN74LVC245APW (E20)
IC607	8-759-392-77	s	IC SN74LVC245APW (E20)
IC608	8-759-392-77	s	IC SN74LVC245APW (E20)
IC700	8-759-987-27	s	IC LM1881M
IC701	8-759-573-91	s	IC AD8055ART-REEL7
IC702	8-759-528-99	s	IC TC74VHC221AFT(EL)
IC703	8-759-392-77	s	IC SN74LVC245APW (E20)
IC704	8-759-639-86	s	IC SN65LVDS32DR
IC705	8-759-573-91	s	IC AD8055ART-REEL7
IC706	8-759-523-95	s	IC TC74VHC74FT(EL)
IC707	6-701-453-01	s	IC SN75207BNSR
IC708	8-759-528-99	s	IC TC74VHC221AFT(EL)
IC709	8-759-196-96	s	IC TC7SH08FU (TE85R)
IC710	8-759-694-36	s	IC SN74CBTLV3257PWR
IC715	8-759-598-13	s	IC CDC2510CPWR
IC716	8-759-639-85	s	IC SN65LVDS31DR
IC719	8-759-392-77	s	IC SN74LVC245APW (E20)
IC720	8-759-392-77	s	IC SN74LVC245APW (E20)
IC721	8-759-392-77	s	IC SN74LVC245APW (E20)
IC722	8-759-392-77	s	IC SN74LVC245APW (E20)
IC723	8-759-196-96	s	IC TC7SH08FU (TE85R)
IC724	8-759-475-55	s	IC TC74LCX574FT(EL)
IC800	8-759-678-15	s	IC TLV2231CDBVR
IC801	8-759-678-15	s	IC TLV2231CDBVR
IC802	8-759-485-79	s	IC TC7SET08FU (TE85L)
IC803	8-759-183-53	s	IC TL431CPK-E2
IC804	8-759-592-47	s	IC TC7SZ08FU(TE85R)
IC805	8-759-524-08	s	IC TC74VHC139FT(EL)
IC806	8-759-592-47	s	IC TC7SZ08FU(TE85R)
IC807	8-759-592-47	s	IC TC7SZ08FU(TE85R)
IC808	8-759-592-47	s	IC TC7SZ08FU(TE85R)
IC809	8-759-564-49	s	IC TC7W53FU-TE12R
IC810	8-759-592-47	s	IC TC7SZ08FU(TE85R)
IC811	8-759-592-47	s	IC TC7SZ08FU(TE85R)
IC812	8-759-564-49	s	IC TC7W53FU-TE12R
IC813	8-759-678-15	s	IC TLV2231CDBVR
IC814	8-759-592-49	s	IC TC7SZ125FU(TE85R)
IC815	8-759-592-49	s	IC TC7SZ125FU(TE85R)
IC816	8-759-592-49	s	IC TC7SZ125FU(TE85R)
IC817	8-759-592-49	s	IC TC7SZ125FU(TE85R)

(HIF-1A BOARD [SUFFIX 21] for HDW PLAYER)

Ref. No. or Q'ty	Part No.	SP	Description
IC870	8-759-678-15	s	IC TLV2231CDBVR
IC871	8-759-592-47	s	IC TC7SZ08FU(TE85R)
IC880	8-759-528-99	s	IC TC74VHC221AFT(EL)
IC881	8-759-669-78	s	IC TLC2933IPWR-12
IC883	8-759-669-78	s	IC TLC2933IPWR-12
IC900	8-759-549-15	s	IC SN74LV245APWR
IC901	8-759-549-15	s	IC SN74LV245APWR
IC902	8-759-549-15	s	IC SN74LV245APWR
IC903	8-759-549-15	s	IC SN74LV245APWR
IC905	8-759-549-15	s	IC SN74LV245APWR
IC906	8-759-549-15	s	IC SN74LV245APWR
IC907	8-759-549-15	s	IC SN74LV245APWR
IC908	8-759-549-15	s	IC SN74LV245APWR
IC909	8-759-661-00	s	IC ISPLSI2192VE-100LT128
IC910	8-759-549-15	s	IC SN74LV245APWR
IC911	8-759-523-94	s	IC TC74VHC32FT(EL)
IC912	8-759-549-15	s	IC SN74LV245APWR
IC913	8-759-491-47	s	IC TC74VHCT08FT (EL)
IC914	8-759-523-81	s	IC TC74VHC08FT(EL)
IC915	8-759-327-60	s	IC TC7W125FU-TE12R
IC916	8-759-524-10	s	IC TC74VHC157FT (EL)
IC917	8-759-082-59	s	IC TC7W32FU
IC918	8-759-196-97	s	IC TC7SH32FU (TE85R)
IC919	8-759-271-86	s	IC TC7SH04FU
IC1000	8-759-539-90	s	IC LM2940SX-5.0
IC1001	8-759-539-89	s	IC LM2990SX-5.0
IC1002	8-759-642-22	s	IC UPC29M05T-E2
IC1004	8-759-597-57	s	IC LTC1628CG#TR
IC1005	8-759-524-10	s	IC TC74VHC157FT (EL)
IC1006	8-759-549-15	s	IC SN74LV245APWR
IC1007	8-759-549-15	s	IC SN74LV245APWR
IC1008	8-759-524-10	s	IC TC74VHC157FT (EL)
IC1010	8-759-491-46	s	IC TC74VHCT04AFT (EL)
IS58	1-251-093-11	s	SOCKET,IC
L700	1-410-377-31	s	INDUCTOR,CHIP 4.7UH (3225)
L1000	1-406-864-21	s	COIL,CHOKE 4.7UH
L1001	1-406-864-21	s	COIL,CHOKE 4.7UH
L1002	1-406-864-21	s	COIL,CHOKE 4.7UH
L1003	1-406-864-21	s	COIL,CHOKE 4.7UH
L1004	1-406-864-21	s	COIL,CHOKE 4.7UH
L1005	1-469-970-11	s	INDUCTOR, (SMD) 15UH
L1006	1-469-970-11	s	INDUCTOR, (SMD) 15UH
L1007	1-406-864-21	s	COIL,CHOKE 4.7UH
Q100	8-729-140-63	s	TRANSISTOR 2SA1611-M5M6
Q101	8-729-029-14	s	TRANSISTOR DTC144EUA-T106
Q200	8-729-140-63	s	TRANSISTOR 2SA1611-M5M6
Q201	8-729-029-14	s	TRANSISTOR DTC144EUA-T106
Q202	8-729-140-63	s	TRANSISTOR 2SA1611-M5M6
Q203	8-729-029-14	s	TRANSISTOR DTC144EUA-T106
Q700	8-729-140-63	s	TRANSISTOR 2SA1611-M5M6
Q701	8-729-117-32	s	TRANSISTOR 2SC4177
Q702	8-729-143-07	s	TRANSISTOR 2SA1610-Y33
Q1000	8-729-047-85	s	TRANSISTOR SI4416DY-T1
Q1001	8-729-047-85	s	TRANSISTOR SI4416DY-T1
Q1002	8-729-047-85	s	TRANSISTOR SI4416DY-T1
Q1003	8-729-047-85	s	TRANSISTOR SI4416DY-T1
R50	1-218-871-11	s	RESISTOR,CHIP 10K 1/16W (1608)

(HIF-1A BOARD [SUFFIX 21] for HDW PLAYER)

Ref. No. or Q'ty	Part No.	SP	Description
R51	1-218-871-11	s	RESISTOR,CHIP 10K 1/16W (1608)
R52	1-218-871-11	s	RESISTOR,CHIP 10K 1/16W (1608)
R53	1-218-847-11	s	RESISTOR, CHIP 1K 1/16W (1608)
R54	1-218-847-11	s	RESISTOR, CHIP 1K 1/16W (1608)
R55	1-218-847-11	s	RESISTOR, CHIP 1K 1/16W (1608)
R57	1-218-847-11	s	RESISTOR, CHIP 1K 1/16W (1608)
R58	1-218-847-11	s	RESISTOR, CHIP 1K 1/16W (1608)
R59	1-218-847-11	s	RESISTOR, CHIP 1K 1/16W (1608)
R60	1-218-847-11	s	RESISTOR, CHIP 1K 1/16W (1608)
R61	1-218-847-11	s	RESISTOR, CHIP 1K 1/16W (1608)
R62	1-218-863-11	s	RESISTOR,CHIP 4.7K 1/16W(1608)
R63	1-218-863-11	s	RESISTOR,CHIP 4.7K 1/16W(1608)
R64	1-218-863-11	s	RESISTOR,CHIP 4.7K 1/16W(1608)
R65	1-218-863-11	s	RESISTOR,CHIP 4.7K 1/16W(1608)
R66	1-218-740-11	s	RESISTOR,CHIP 100K 1/16W(1608)
R68	1-216-296-00	s	CONDUCTOR, CHIP (3216)
R100	1-218-644-11	s	RESISTOR,CHIP 10 1/16W
R101	1-218-644-11	s	RESISTOR,CHIP 10 1/16W
R102	1-218-644-11	s	RESISTOR,CHIP 10 1/16W
R103	1-218-644-11	s	RESISTOR,CHIP 10 1/16W
R110	1-218-644-11	s	RESISTOR,CHIP 10 1/16W
R123	1-218-692-11	s	RESISTOR,CHIP 1.0K 1/16W(1608)
R124	1-218-692-11	s	RESISTOR,CHIP 1.0K 1/16W(1608)
R125	1-218-660-91	s	RESISTOR,CHIP 47 1/16W (1608)
R126	1-218-652-11	s	RESISTOR,CHIP 22 1/16W (1608)
R127	1-218-652-11	s	RESISTOR,CHIP 22 1/16W (1608)
R128	1-218-652-11	s	RESISTOR,CHIP 22 1/16W (1608)
R129	1-218-652-11	s	RESISTOR,CHIP 22 1/16W (1608)
R130	1-218-652-11	s	RESISTOR,CHIP 22 1/16W (1608)
R131	1-218-652-11	s	RESISTOR,CHIP 22 1/16W (1608)
R132	1-218-652-11	s	RESISTOR,CHIP 22 1/16W (1608)
R133	1-218-652-11	s	RESISTOR,CHIP 22 1/16W (1608)
R135	1-218-652-11	s	RESISTOR,CHIP 22 1/16W (1608)
R143	1-218-740-11	s	RESISTOR,CHIP 100K 1/16W(1608)
R146	1-218-708-11	s	RESISTOR,CHIP 4.7K 1/16W(1608)
R147	1-218-708-11	s	RESISTOR,CHIP 4.7K 1/16W(1608)
R178	1-216-864-11	s	CONDUCTOR, CHIP (1608)
R223	1-216-864-11	s	CONDUCTOR, CHIP (1608)
R224	1-218-692-11	s	RESISTOR,CHIP 1.0K 1/16W(1608)
R225	1-218-692-11	s	RESISTOR,CHIP 1.0K 1/16W(1608)
R226	1-218-660-91	s	RESISTOR,CHIP 47 1/16W (1608)
R231	1-218-652-11	s	RESISTOR,CHIP 22 1/16W (1608)
R232	1-218-652-11	s	RESISTOR,CHIP 22 1/16W (1608)
R233	1-218-652-11	s	RESISTOR,CHIP 22 1/16W (1608)
R234	1-218-652-11	s	RESISTOR,CHIP 22 1/16W (1608)
R235	1-218-652-11	s	RESISTOR,CHIP 22 1/16W (1608)
R236	1-218-652-11	s	RESISTOR,CHIP 22 1/16W (1608)
R237	1-218-652-11	s	RESISTOR,CHIP 22 1/16W (1608)
R238	1-218-652-11	s	RESISTOR,CHIP 22 1/16W (1608)
R239	1-218-652-11	s	RESISTOR,CHIP 22 1/16W (1608)
R240	1-218-652-11	s	RESISTOR,CHIP 22 1/16W (1608)
R241	1-216-864-11	s	CONDUCTOR, CHIP (1608)
R243	1-218-692-11	s	RESISTOR,CHIP 1.0K 1/16W(1608)
R244	1-218-692-11	s	RESISTOR,CHIP 1.0K 1/16W(1608)
R245	1-218-660-91	s	RESISTOR,CHIP 47 1/16W (1608)
R246	1-218-676-11	s	RESISTOR,CHIP 220 1/16W(1608)
R247	1-218-676-11	s	RESISTOR,CHIP 220 1/16W(1608)
R248	1-218-676-11	s	RESISTOR,CHIP 220 1/16W(1608)
R249	1-218-676-11	s	RESISTOR,CHIP 220 1/16W(1608)

(HIF-1A BOARD [SUFFIX 21] for HDW PLAYER)

Ref. No. or Q'ty	Part No.	SP	Description
R250	1-218-652-11	s	RESISTOR,CHIP 22 1/16W (1608)
R251	1-218-652-11	s	RESISTOR,CHIP 22 1/16W (1608)
R252	1-218-652-11	s	RESISTOR,CHIP 22 1/16W (1608)
R253	1-218-652-11	s	RESISTOR,CHIP 22 1/16W (1608)
R254	1-218-652-11	s	RESISTOR,CHIP 22 1/16W (1608)
R255	1-218-652-11	s	RESISTOR,CHIP 22 1/16W (1608)
R256	1-218-652-11	s	RESISTOR,CHIP 22 1/16W (1608)
R257	1-218-652-11	s	RESISTOR,CHIP 22 1/16W (1608)
R258	1-218-652-11	s	RESISTOR,CHIP 22 1/16W (1608)
R259	1-218-652-11	s	RESISTOR,CHIP 22 1/16W (1608)
R260	1-218-660-91	s	RESISTOR,CHIP 47 1/16W (1608)
R261	1-218-660-91	s	RESISTOR,CHIP 47 1/16W (1608)
R262	1-218-660-91	s	RESISTOR,CHIP 47 1/16W (1608)
R263	1-218-660-91	s	RESISTOR,CHIP 47 1/16W (1608)
R265	1-216-864-11	s	CONDUCTOR, CHIP (1608)
R266	1-216-864-11	s	CONDUCTOR, CHIP (1608)
R269	1-216-864-11	s	CONDUCTOR, CHIP (1608)
R270	1-216-864-11	s	CONDUCTOR, CHIP (1608)
R272	1-216-864-11	s	CONDUCTOR, CHIP (1608)
R273	1-216-864-11	s	CONDUCTOR, CHIP (1608)
R274	1-218-652-11	s	RESISTOR,CHIP 22 1/16W (1608)
R278	1-218-660-91	s	RESISTOR,CHIP 47 1/16W (1608)
R279	1-218-660-91	s	RESISTOR,CHIP 47 1/16W (1608)
R280	1-216-864-11	s	CONDUCTOR, CHIP (1608)
R281	1-218-708-11	s	RESISTOR,CHIP 4.7K 1/16W(1608)
R282	1-218-708-11	s	RESISTOR,CHIP 4.7K 1/16W(1608)
R283	1-218-708-11	s	RESISTOR,CHIP 4.7K 1/16W(1608)
R284	1-218-708-11	s	RESISTOR,CHIP 4.7K 1/16W(1608)
R285	1-216-864-11	s	CONDUCTOR, CHIP (1608)
R300	1-216-864-11	s	CONDUCTOR, CHIP (1608)
R301	1-218-740-11	s	RESISTOR,CHIP 100K 1/16W(1608)
R302	1-216-864-11	s	CONDUCTOR, CHIP (1608)
R303	1-216-864-11	s	CONDUCTOR, CHIP (1608)
R304	1-216-864-11	s	CONDUCTOR, CHIP (1608)
R305	1-218-727-11	s	RESISTOR,CHIP 30K 1/16W(1608)
R306	1-218-692-11	s	RESISTOR,CHIP 1.0K 1/16W(1608)
R401	1-218-660-91	s	RESISTOR,CHIP 47 1/16W (1608)
R402	1-218-660-91	s	RESISTOR,CHIP 47 1/16W (1608)
R403	1-218-660-91	s	RESISTOR,CHIP 47 1/16W (1608)
R404	1-218-660-91	s	RESISTOR,CHIP 47 1/16W (1608)
R405	1-218-660-91	s	RESISTOR,CHIP 47 1/16W (1608)
R406	1-216-864-11	s	CONDUCTOR, CHIP (1608)
R407	1-218-660-91	s	RESISTOR,CHIP 47 1/16W (1608)
R408	1-218-660-91	s	RESISTOR,CHIP 47 1/16W (1608)
R409	1-216-864-11	s	CONDUCTOR, CHIP (1608)
R411	1-216-864-11	s	CONDUCTOR, CHIP (1608)
R412	1-218-660-91	s	RESISTOR,CHIP 47 1/16W (1608)
R413	1-218-660-91	s	RESISTOR,CHIP 47 1/16W (1608)
R414	1-216-864-11	s	CONDUCTOR, CHIP (1608)
R415	1-218-692-11	s	RESISTOR,CHIP 1.0K 1/16W(1608)
R416	1-218-686-11	s	RESISTOR CHIP 560 1/16W (1608)
R417	1-218-660-91	s	RESISTOR,CHIP 47 1/16W (1608)
R418	1-216-864-11	s	CONDUCTOR, CHIP (1608)
R419	1-216-864-11	s	CONDUCTOR, CHIP (1608)
R500	1-216-864-11	s	CONDUCTOR, CHIP (1608)
R501	1-216-864-11	s	CONDUCTOR, CHIP (1608)
R502	1-216-864-11	s	CONDUCTOR, CHIP (1608)
R503	1-216-864-11	s	CONDUCTOR, CHIP (1608)
R504	1-216-864-11	s	CONDUCTOR, CHIP (1608)

(HIF-1A BOARD [SUFFIX 21] for HDW PLAYER)

Ref. No. or Q'ty	Part No.	SP	Description
R505	1-216-864-11	s	CONDUCTOR, CHIP (1608)
R506	1-216-864-11	s	CONDUCTOR, CHIP (1608)
R507	1-216-864-11	s	CONDUCTOR, CHIP (1608)
R600	1-218-716-11	s	RESISTOR,CHIP 10K 1/16W(1608)
R601	1-218-716-11	s	RESISTOR,CHIP 10K 1/16W(1608)
R602	1-218-716-11	s	RESISTOR,CHIP 10K 1/16W(1608)
R603	1-218-716-11	s	RESISTOR,CHIP 10K 1/16W(1608)
R604	1-218-716-11	s	RESISTOR,CHIP 10K 1/16W(1608)
R605	1-218-716-11	s	RESISTOR,CHIP 10K 1/16W(1608)
R606	1-216-864-11	s	CONDUCTOR, CHIP (1608)
R607	1-218-716-11	s	RESISTOR,CHIP 10K 1/16W(1608)
R608	1-218-716-11	s	RESISTOR,CHIP 10K 1/16W(1608)
R609	1-218-716-11	s	RESISTOR,CHIP 10K 1/16W(1608)
R610	1-218-716-11	s	RESISTOR,CHIP 10K 1/16W(1608)
R611	1-218-716-11	s	RESISTOR,CHIP 10K 1/16W(1608)
R612	1-218-716-11	s	RESISTOR,CHIP 10K 1/16W(1608)
R613	1-218-716-11	s	RESISTOR,CHIP 10K 1/16W(1608)
R614	1-218-716-11	s	RESISTOR,CHIP 10K 1/16W(1608)
R615	1-218-716-11	s	RESISTOR,CHIP 10K 1/16W(1608)
R616	1-218-716-11	s	RESISTOR,CHIP 10K 1/16W(1608)
R622	1-218-716-11	s	RESISTOR,CHIP 10K 1/16W(1608)
R623	1-218-716-11	s	RESISTOR,CHIP 10K 1/16W(1608)
R624	1-218-716-11	s	RESISTOR,CHIP 10K 1/16W(1608)
R625	1-218-716-11	s	RESISTOR,CHIP 10K 1/16W(1608)
R626	1-218-660-91	s	RESISTOR,CHIP 47 1/16W (1608)
R627	1-218-660-91	s	RESISTOR,CHIP 47 1/16W (1608)
R628	1-218-660-91	s	RESISTOR,CHIP 47 1/16W (1608)
R629	1-218-660-91	s	RESISTOR,CHIP 47 1/16W (1608)
R632	1-218-660-91	s	RESISTOR,CHIP 47 1/16W (1608)
R633	1-218-660-91	s	RESISTOR,CHIP 47 1/16W (1608)
R634	1-218-660-91	s	RESISTOR,CHIP 47 1/16W (1608)
R635	1-218-660-91	s	RESISTOR,CHIP 47 1/16W (1608)
R636	1-218-660-91	s	RESISTOR,CHIP 47 1/16W (1608)
R700	1-218-692-11	s	RESISTOR,CHIP 1.0K 1/16W(1608)
R701	1-218-692-11	s	RESISTOR,CHIP 1.0K 1/16W(1608)
R702	1-218-677-11	s	RESISTOR,CHIP 240 1/16W (1608)
R703	1-218-701-11	s	RESISTOR,CHIP 2.4K 1/16W(1608)
R704	1-218-692-11	s	RESISTOR,CHIP 1.0K 1/16W(1608)
R705	1-218-668-11	s	RESISTOR,CHIP 100 1/16W (1608)
R706	1-218-668-11	s	RESISTOR,CHIP 100 1/16W (1608)
R707	1-218-668-11	s	RESISTOR,CHIP 100 1/16W (1608)
R708	1-218-668-11	s	RESISTOR,CHIP 100 1/16W (1608)
R709	1-218-700-11	s	RESISTOR,CHIP 2.2K 1/16W(1608)
R710	1-218-710-11	s	RESISTOR,CHIP 5.6K 1/16W(1608)
R711	1-218-716-11	s	RESISTOR,CHIP 10K 1/16W(1608)
R712	1-216-863-11	s	RESISTOR,CHIP 3.3M 1/16W 1608
R713	1-218-692-11	s	RESISTOR,CHIP 1.0K 1/16W(1608)
R714	1-218-668-11	s	RESISTOR,CHIP 100 1/16W (1608)
R715	1-218-704-11	s	RESISTOR,CHIP 3.3K 1/16W(1608)
R716	1-218-660-91	s	RESISTOR,CHIP 47 1/16W (1608)
R717	1-218-660-91	s	RESISTOR,CHIP 47 1/16W (1608)
R718	1-218-660-91	s	RESISTOR,CHIP 47 1/16W (1608)
R719	1-218-660-91	s	RESISTOR,CHIP 47 1/16W (1608)
R720	1-218-668-11	s	RESISTOR,CHIP 100 1/16W (1608)
R721	1-218-668-11	s	RESISTOR,CHIP 100 1/16W (1608)
R722	1-218-708-11	s	RESISTOR,CHIP 4.7K 1/16W(1608)
R723	1-218-703-11	s	RESISTOR,CHIP 3.0K 1/16(1608)
R724	1-218-692-11	s	RESISTOR,CHIP 1.0K 1/16W(1608)
R725	1-218-652-11	s	RESISTOR,CHIP 22 1/16W (1608)

(HIF-1A BOARD [SUFFIX 21] for HDW PLAYER)

Ref. No. or Q'ty	Part No.	SP	Description
R726	1-218-684-11	s	RESISTOR,CHIP 470 1/16W (1608)
R727	1-218-684-11	s	RESISTOR,CHIP 470 1/16W (1608)
R728	1-218-716-11	s	RESISTOR,CHIP 10K 1/16W(1608)
R729	1-218-660-91	s	RESISTOR,CHIP 47 1/16W (1608)
R730	1-218-708-11	s	RESISTOR,CHIP 4.7K 1/16W(1608)
R731	1-218-708-11	s	RESISTOR,CHIP 4.7K 1/16W(1608)
R732	1-218-708-11	s	RESISTOR,CHIP 4.7K 1/16W(1608)
R734	1-216-864-11	s	CONDUCTOR, CHIP (1608)
R735	1-216-864-11	s	CONDUCTOR, CHIP (1608)
R736	1-216-864-11	s	CONDUCTOR, CHIP (1608)
R737	1-218-708-11	s	RESISTOR,CHIP 4.7K 1/16W(1608)
R738	1-216-864-11	s	CONDUCTOR, CHIP (1608)
R739	1-216-864-11	s	CONDUCTOR, CHIP (1608)
R740	1-216-864-11	s	CONDUCTOR, CHIP (1608)
R741	1-216-864-11	s	CONDUCTOR, CHIP (1608)
R742	1-216-864-11	s	CONDUCTOR, CHIP (1608)
R743	1-216-864-11	s	CONDUCTOR, CHIP (1608)
R744	1-216-864-11	s	CONDUCTOR, CHIP (1608)
R745	1-216-864-11	s	CONDUCTOR, CHIP (1608)
R746	1-216-864-11	s	CONDUCTOR, CHIP (1608)
R747	1-218-702-11	s	RESISTOR CHIP 2.7K 1/16W(1608)
R751	1-218-660-91	s	RESISTOR,CHIP 47 1/16W (1608)
R752	1-218-660-91	s	RESISTOR,CHIP 47 1/16W (1608)
R754	1-218-660-91	s	RESISTOR,CHIP 47 1/16W (1608)
R755	1-218-660-91	s	RESISTOR,CHIP 47 1/16W (1608)
R756	1-218-660-91	s	RESISTOR,CHIP 47 1/16W (1608)
R757	1-218-660-91	s	RESISTOR,CHIP 47 1/16W (1608)
R758	1-218-660-91	s	RESISTOR,CHIP 47 1/16W (1608)
R759	1-218-660-91	s	RESISTOR,CHIP 47 1/16W (1608)
R760	1-218-660-91	s	RESISTOR,CHIP 47 1/16W (1608)
R761	1-218-660-91	s	RESISTOR,CHIP 47 1/16W (1608)
R769	1-218-692-11	s	RESISTOR,CHIP 1.0K 1/16W(1608)
R772	1-218-692-11	s	RESISTOR,CHIP 1.0K 1/16W(1608)
R775	1-218-660-91	s	RESISTOR,CHIP 47 1/16W (1608)
R776	1-218-652-11	s	RESISTOR,CHIP 22 1/16W (1608)
R777	1-218-652-11	s	RESISTOR,CHIP 22 1/16W (1608)
R778	1-218-652-11	s	RESISTOR,CHIP 22 1/16W (1608)
R779	1-218-652-11	s	RESISTOR,CHIP 22 1/16W (1608)
R781	1-218-652-11	s	RESISTOR,CHIP 22 1/16W (1608)
R783	1-218-652-11	s	RESISTOR,CHIP 22 1/16W (1608)
R784	1-218-652-11	s	RESISTOR,CHIP 22 1/16W (1608)
R785	1-218-652-11	s	RESISTOR,CHIP 22 1/16W (1608)
R792	1-218-660-91	s	RESISTOR,CHIP 47 1/16W (1608)
R793	1-218-692-11	s	RESISTOR,CHIP 1.0K 1/16W(1608)
R794	1-218-692-11	s	RESISTOR,CHIP 1.0K 1/16W(1608)
R796	1-218-740-11	s	RESISTOR,CHIP 100K 1/16W(1608)
R797	1-218-696-11	s	RESISTOR,CHIP 1.5K 1/16W(1608)
R798	1-218-692-11	s	RESISTOR,CHIP 1.0K 1/16W(1608)
R799	1-218-660-91	s	RESISTOR,CHIP 47 1/16W (1608)
R800	1-218-692-11	s	RESISTOR,CHIP 1.0K 1/16W(1608)
R801	1-218-692-11	s	RESISTOR,CHIP 1.0K 1/16W(1608)
R802	1-216-864-11	s	CONDUCTOR, CHIP (1608)
R803	1-216-864-11	s	CONDUCTOR, CHIP (1608)
R804	1-216-864-11	s	CONDUCTOR, CHIP (1608)
R805	1-218-692-11	s	RESISTOR,CHIP 1.0K 1/16W(1608)
R806	1-218-692-11	s	RESISTOR,CHIP 1.0K 1/16W(1608)
R807	1-218-692-11	s	RESISTOR,CHIP 1.0K 1/16W(1608)
R808	1-218-692-11	s	RESISTOR,CHIP 1.0K 1/16W(1608)
R809	1-218-692-11	s	RESISTOR,CHIP 1.0K 1/16W(1608)

(HIF-1A BOARD [SUFFIX 21] for HDW PLAYER)

Ref. No. or Q'ty	Part No.	SP	Description
R810	1-218-692-11	s	RESISTOR,CHIP 1.0K 1/16W(1608)
R811	1-218-660-91	s	RESISTOR,CHIP 47 1/16W (1608)
R813	1-218-660-91	s	RESISTOR,CHIP 47 1/16W (1608)
R814	1-218-692-11	s	RESISTOR,CHIP 1.0K 1/16W(1608)
R815	1-218-692-11	s	RESISTOR,CHIP 1.0K 1/16W(1608)
R816	1-218-748-11	s	RESISTOR,CHIP 220K 1/16W(1608)
R818	1-218-740-11	s	RESISTOR,CHIP 100K 1/16W(1608)
R819	1-218-740-11	s	RESISTOR,CHIP 100K 1/16W(1608)
R822	1-218-716-11	s	RESISTOR,CHIP 10K 1/16W(1608)
R823	1-218-716-11	s	RESISTOR,CHIP 10K 1/16W(1608)
R824	1-218-716-11	s	RESISTOR,CHIP 10K 1/16W(1608)
R826	1-218-716-11	s	RESISTOR,CHIP 10K 1/16W(1608)
R827	1-218-716-11	s	RESISTOR,CHIP 10K 1/16W(1608)
R828	1-218-676-11	s	RESISTOR,CHIP 220 1/16W(1608)
R832	1-218-684-11	s	RESISTOR,CHIP 470 1/16W (1608)
R835	1-218-660-91	s	RESISTOR,CHIP 47 1/16W (1608)
R836	1-218-660-91	s	RESISTOR,CHIP 47 1/16W (1608)
R837	1-218-660-91	s	RESISTOR,CHIP 47 1/16W (1608)
R838	1-218-660-91	s	RESISTOR,CHIP 47 1/16W (1608)
R839	1-218-684-11	s	RESISTOR,CHIP 470 1/16W (1608)
R840	1-218-660-91	s	RESISTOR,CHIP 47 1/16W (1608)
R841	1-218-660-91	s	RESISTOR,CHIP 47 1/16W (1608)
R870	1-218-692-11	s	RESISTOR,CHIP 1.0K 1/16W(1608)
R871	1-218-740-11	s	RESISTOR,CHIP 100K 1/16W(1608)
R872	1-218-716-11	s	RESISTOR,CHIP 10K 1/16W(1608)
R873	1-218-716-11	s	RESISTOR,CHIP 10K 1/16W(1608)
R874	1-218-660-91	s	RESISTOR,CHIP 47 1/16W (1608)
R875	1-216-864-11	s	CONDUCTOR, CHIP (1608)
R880	1-218-672-11	s	RESISTOR,CHIP 150 1/16W(1608)
R881	1-218-672-11	s	RESISTOR,CHIP 150 1/16W(1608)
R884	1-218-724-11	s	RESISTOR,CHIP 22K 1/16W(1608)
R885	1-218-672-11	s	RESISTOR,CHIP 150 1/16W(1608)
R886	1-218-672-11	s	RESISTOR,CHIP 150 1/16W(1608)
R887	1-218-700-11	s	RESISTOR,CHIP 2.2K 1/16W(1608)
R888	1-218-692-11	s	RESISTOR,CHIP 1.0K 1/16W(1608)
R889	1-218-700-11	s	RESISTOR,CHIP 2.2K 1/16W(1608)
R900	1-218-740-11	s	RESISTOR,CHIP 100K 1/16W(1608)
R901	1-218-668-11	s	RESISTOR,CHIP 100 1/16W (1608)
R902	1-216-864-11	s	CONDUCTOR, CHIP (1608)
R904	1-216-864-11	s	CONDUCTOR, CHIP (1608)
R905	1-216-864-11	s	CONDUCTOR, CHIP (1608)
R906	1-216-864-11	s	CONDUCTOR, CHIP (1608)
R907	1-216-864-11	s	CONDUCTOR, CHIP (1608)
R908	1-218-708-11	s	RESISTOR,CHIP 4.7K 1/16W(1608)
R909	1-218-708-11	s	RESISTOR,CHIP 4.7K 1/16W(1608)
R910	1-218-740-11	s	RESISTOR,CHIP 100K 1/16W(1608)
R911	1-218-740-11	s	RESISTOR,CHIP 100K 1/16W(1608)
R912	1-218-740-11	s	RESISTOR,CHIP 100K 1/16W(1608)
R913	1-218-660-91	s	RESISTOR,CHIP 47 1/16W (1608)
R915	1-218-740-11	s	RESISTOR,CHIP 100K 1/16W(1608)
R916	1-218-740-11	s	RESISTOR,CHIP 100K 1/16W(1608)
R917	1-218-660-91	s	RESISTOR,CHIP 47 1/16W (1608)
R918	1-218-660-91	s	RESISTOR,CHIP 47 1/16W (1608)
R920	1-216-864-11	s	CONDUCTOR, CHIP (1608)
R921	1-216-864-11	s	CONDUCTOR, CHIP (1608)
R924	1-216-864-11	s	CONDUCTOR, CHIP (1608)
R926	1-216-864-11	s	CONDUCTOR, CHIP (1608)
R927	1-218-740-11	s	RESISTOR,CHIP 100K 1/16W(1608)
R928	1-218-660-91	s	RESISTOR,CHIP 47 1/16W (1608)

(HIF-1A BOARD [SUFFIX 21] for HDW PLAYER)

Ref. No. or Q'ty	Part No.	SP	Description
R930	1-218-708-11	s	RESISTOR,CHIP 4.7K 1/16W(1608)
R931	1-218-708-11	s	RESISTOR,CHIP 4.7K 1/16W(1608)
R932	1-218-740-11	s	RESISTOR,CHIP 100K 1/16W(1608)
R933	1-218-740-11	s	RESISTOR,CHIP 100K 1/16W(1608)
R934	1-216-864-11	s	CONDUCTOR, CHIP (1608)
R936	1-218-660-91	s	RESISTOR,CHIP 47 1/16W (1608)
R937	1-218-740-11	s	RESISTOR,CHIP 100K 1/16W(1608)
R938	1-218-740-11	s	RESISTOR,CHIP 100K 1/16W(1608)
R939	1-218-740-11	s	RESISTOR,CHIP 100K 1/16W(1608)
R940	1-216-864-11	s	CONDUCTOR, CHIP (1608)
R942	1-218-660-91	s	RESISTOR,CHIP 47 1/16W (1608)
R943	1-218-660-91	s	RESISTOR,CHIP 47 1/16W (1608)
R944	1-218-740-11	s	RESISTOR,CHIP 100K 1/16W(1608)
R945	1-218-660-91	s	RESISTOR,CHIP 47 1/16W (1608)
R946	1-218-660-91	s	RESISTOR,CHIP 47 1/16W (1608)
R947	1-218-660-91	s	RESISTOR,CHIP 47 1/16W (1608)
R948	1-218-660-91	s	RESISTOR,CHIP 47 1/16W (1608)
R949	1-218-660-91	s	RESISTOR,CHIP 47 1/16W (1608)
R950	1-218-660-91	s	RESISTOR,CHIP 47 1/16W (1608)
R951	1-218-660-91	s	RESISTOR,CHIP 47 1/16W (1608)
R952	1-218-660-91	s	RESISTOR,CHIP 47 1/16W (1608)
R953	1-218-668-11	s	RESISTOR,CHIP 100 1/16W (1608)
R954	1-218-668-11	s	RESISTOR,CHIP 100 1/16W (1608)
R1000	1-219-989-11	s	RESISTOR, SQUARE CHIP 0.02 1W
R1003	1-218-644-11	s	RESISTOR,CHIP 10 1/16W
R1004	1-218-644-11	s	RESISTOR,CHIP 10 1/16W
R1005	1-218-725-11	s	RESISTOR,CHIP 24K 1/16W(1608)
R1006	1-218-722-11	s	RESISTOR, CHIP 18K 1/16W 1608
R1009	1-218-708-11	s	RESISTOR,CHIP 4.7K 1/16W(1608)
R1011	1-216-864-11	s	CONDUCTOR, CHIP (1608)
R1016	1-218-668-11	s	RESISTOR,CHIP 100 1/16W (1608)
R1021	1-218-708-11	s	RESISTOR,CHIP 4.7K 1/16W(1608)
R1022	1-218-715-11	s	RESISTOR,METAL 9.1K 1/16W
R1023	1-218-716-11	s	RESISTOR,CHIP 10K 1/16W(1608)
R1026	1-218-644-11	s	RESISTOR,CHIP 10 1/16W
R1027	1-218-644-11	s	RESISTOR,CHIP 10 1/16W
R1028	1-219-989-11	s	RESISTOR, SQUARE CHIP 0.02 1W
R1030	1-216-864-11	s	CONDUCTOR, CHIP (1608)
R1032	1-216-864-11	s	CONDUCTOR, CHIP (1608)
RB50	1-236-904-11	s	RESISTOR NETWORK 1K (1608)
RB51	1-236-904-11	s	RESISTOR NETWORK 1K (1608)
RB52	1-239-409-11	s	RESISTOR NETWORK 47 (1608)
RB53	1-239-409-11	s	RESISTOR NETWORK 47 (1608)
RB200	1-239-409-11	s	RESISTOR NETWORK 47 (1608)
RB201	1-239-409-11	s	RESISTOR NETWORK 47 (1608)
RB202	1-239-409-11	s	RESISTOR NETWORK 47 (1608)
RB203	1-239-409-11	s	RESISTOR NETWORK 47 (1608)
RB204	1-239-409-11	s	RESISTOR NETWORK 47 (1608)
RB205	1-239-409-11	s	RESISTOR NETWORK 47 (1608)
RB206	1-239-409-11	s	RESISTOR NETWORK 47 (1608)
RB207	1-239-416-11	s	NETWORK,RESISTOR 220 (1608)
RB208	1-239-416-11	s	NETWORK,RESISTOR 220 (1608)
RB209	1-239-416-11	s	NETWORK,RESISTOR 220 (1608)
RB210	1-239-416-11	s	NETWORK,RESISTOR 220 (1608)
RB211	1-239-416-11	s	NETWORK,RESISTOR 220 (1608)
RB212	1-239-416-11	s	NETWORK,RESISTOR 220 (1608)
RB213	1-239-409-11	s	RESISTOR NETWORK 47 (1608)
RB214	1-239-409-11	s	RESISTOR NETWORK 47 (1608)
RB215	1-239-409-11	s	RESISTOR NETWORK 47 (1608)

(HIF-1A BOARD [SUFFIX 21] for HDW PLAYER)

Ref. No. or Q'ty	Part No.	SP	Description
RB216	1-239-409-11	s	RESISTOR NETWORK 47 (1608)
RB217	1-239-409-11	s	RESISTOR NETWORK 47 (1608)
RB218	1-239-409-11	s	RESISTOR NETWORK 47 (1608)
RB219	1-239-409-11	s	RESISTOR NETWORK 47 (1608)
RB220	1-239-409-11	s	RESISTOR NETWORK 47 (1608)
RB221	1-239-409-11	s	RESISTOR NETWORK 47 (1608)
RB222	1-239-409-11	s	RESISTOR NETWORK 47 (1608)
RB223	1-239-409-11	s	RESISTOR NETWORK 47 (1608)
RB224	1-239-409-11	s	RESISTOR NETWORK 47 (1608)
RB225	1-239-409-11	s	RESISTOR NETWORK 47 (1608)
RB400	1-239-409-11	s	RESISTOR NETWORK 47 (1608)
RB401	1-239-409-11	s	RESISTOR NETWORK 47 (1608)
RB402	1-239-409-11	s	RESISTOR NETWORK 47 (1608)
RB403	1-239-409-11	s	RESISTOR NETWORK 47 (1608)
RB404	1-239-409-11	s	RESISTOR NETWORK 47 (1608)
RB405	1-239-409-11	s	RESISTOR NETWORK 47 (1608)
RB406	1-239-409-11	s	RESISTOR NETWORK 47 (1608)
RB407	1-239-409-11	s	RESISTOR NETWORK 47 (1608)
RB408	1-239-409-11	s	RESISTOR NETWORK 47 (1608)
RB409	1-239-409-11	s	RESISTOR NETWORK 47 (1608)
RB410	1-239-409-11	s	RESISTOR NETWORK 47 (1608)
RB411	1-239-409-11	s	RESISTOR NETWORK 47 (1608)
RB412	1-239-409-11	s	RESISTOR NETWORK 47 (1608)
RB413	1-239-409-11	s	RESISTOR NETWORK 47 (1608)
RB414	1-239-409-11	s	RESISTOR NETWORK 47 (1608)
RB415	1-239-409-11	s	RESISTOR NETWORK 47 (1608)
RB416	1-239-409-11	s	RESISTOR NETWORK 47 (1608)
RB417	1-239-409-11	s	RESISTOR NETWORK 47 (1608)
RB418	1-239-409-11	s	RESISTOR NETWORK 47 (1608)
RB419	1-239-409-11	s	RESISTOR NETWORK 47 (1608)
RB420	1-239-409-11	s	RESISTOR NETWORK 47 (1608)
RB500	1-233-936-11	s	RESISTOR,NETWORK 10 (1608)
RB501	1-233-936-11	s	RESISTOR,NETWORK 10 (1608)
RB502	1-233-936-11	s	RESISTOR,NETWORK 10 (1608)
RB503	1-233-936-11	s	RESISTOR,NETWORK 10 (1608)
RB504	1-233-936-11	s	RESISTOR,NETWORK 10 (1608)
RB505	1-233-936-11	s	RESISTOR,NETWORK 10 (1608)
RB506	1-233-936-11	s	RESISTOR,NETWORK 10 (1608)
RB507	1-233-936-11	s	RESISTOR,NETWORK 10 (1608)
RB508	1-233-936-11	s	RESISTOR,NETWORK 10 (1608)
RB509	1-233-936-11	s	RESISTOR,NETWORK 10 (1608)
RB510	1-233-936-11	s	RESISTOR,NETWORK 10 (1608)
RB511	1-233-936-11	s	RESISTOR,NETWORK 10 (1608)
RB600	1-239-409-11	s	RESISTOR NETWORK 47 (1608)
RB601	1-239-409-11	s	RESISTOR NETWORK 47 (1608)
RB602	1-239-409-11	s	RESISTOR NETWORK 47 (1608)
RB603	1-239-409-11	s	RESISTOR NETWORK 47 (1608)
RB606	1-239-621-11	s	NETWORK RESISTOR 22 (1608)
RB607	1-239-621-11	s	NETWORK RESISTOR 22 (1608)
RB608	1-239-621-11	s	NETWORK RESISTOR 22 (1608)
RB609	1-239-621-11	s	NETWORK RESISTOR 22 (1608)
RB610	1-239-621-11	s	NETWORK RESISTOR 22 (1608)
RB611	1-239-621-11	s	NETWORK RESISTOR 22 (1608)
RB700	1-239-409-11	s	RESISTOR NETWORK 47 (1608)
RB701	1-239-409-11	s	RESISTOR NETWORK 47 (1608)
RB702	1-239-621-11	s	NETWORK RESISTOR 22 (1608)
RB703	1-239-621-11	s	NETWORK RESISTOR 22 (1608)
RB704	1-239-621-11	s	NETWORK RESISTOR 22 (1608)
RB705	1-239-621-11	s	NETWORK RESISTOR 22 (1608)

(HIF-1A BOARD [SUFFIX 21] for HDW PLAYER)

Ref. No. or Q'ty	Part No.	SP	Description
RB706	1-239-621-11	s	NETWORK RESISTOR 22 (1608)
RB707	1-239-621-11	s	NETWORK RESISTOR 22 (1608)
RB708	1-239-621-11	s	NETWORK RESISTOR 22 (1608)
RB709	1-239-621-11	s	NETWORK RESISTOR 22 (1608)
RB900	1-236-907-11	s	RESISTOR BLOCK 100K (1608)
RB901	1-236-907-11	s	RESISTOR BLOCK 100K (1608)
RB902	1-236-907-11	s	RESISTOR BLOCK 100K (1608)
RB903	1-236-907-11	s	RESISTOR BLOCK 100K (1608)
RB904	1-236-907-11	s	RESISTOR BLOCK 100K (1608)
RB905	1-236-907-11	s	RESISTOR BLOCK 100K (1608)
RB906	1-236-907-11	s	RESISTOR BLOCK 100K (1608)
RB908	1-239-409-11	s	RESISTOR NETWORK 47 (1608)
RB909	1-239-409-11	s	RESISTOR NETWORK 47 (1608)
RB910	1-239-409-11	s	RESISTOR NETWORK 47 (1608)
RB911	1-239-409-11	s	RESISTOR NETWORK 47 (1608)
RB912	1-239-409-11	s	RESISTOR NETWORK 47 (1608)
RB913	1-239-409-11	s	RESISTOR NETWORK 47 (1608)
RB914	1-239-409-11	s	RESISTOR NETWORK 47 (1608)
RB918	1-239-430-11	s	NETWORK RESISTOR 4.7K (1608)
RB919	1-239-430-11	s	NETWORK RESISTOR 4.7K (1608)
RB920	1-239-430-11	s	NETWORK RESISTOR 4.7K (1608)
RB921	1-239-430-11	s	NETWORK RESISTOR 4.7K (1608)
RB922	1-236-907-11	s	RESISTOR BLOCK 100K (1608)
RB923	1-236-907-11	s	RESISTOR BLOCK 100K (1608)
RB924	1-236-907-11	s	RESISTOR BLOCK 100K (1608)
RB925	1-239-430-11	s	NETWORK RESISTOR 4.7K (1608)
RB926	1-239-430-11	s	NETWORK RESISTOR 4.7K (1608)
RB927	1-239-409-11	s	RESISTOR NETWORK 47 (1608)
RB928	1-239-409-11	s	RESISTOR NETWORK 47 (1608)
RB929	1-239-409-11	s	RESISTOR NETWORK 47 (1608)
RB930	1-239-409-11	s	RESISTOR NETWORK 47 (1608)
RB931	1-236-907-11	s	RESISTOR BLOCK 100K (1608)
RB932	1-239-409-11	s	RESISTOR NETWORK 47 (1608)
RB933	1-239-409-11	s	RESISTOR NETWORK 47 (1608)
RB934	1-239-409-11	s	RESISTOR NETWORK 47 (1608)
RB935	1-236-907-11	s	RESISTOR BLOCK 100K (1608)
RB1000	1-236-904-11	s	RESISTOR NETWORK 1K (1608)
RB1001	1-236-904-11	s	RESISTOR NETWORK 1K (1608)
RB1002	1-239-409-11	s	RESISTOR NETWORK 47 (1608)
RB1004	1-239-409-11	s	RESISTOR NETWORK 47 (1608)
RB1005	1-239-409-11	s	RESISTOR NETWORK 47 (1608)
RB1006	1-239-621-11	s	NETWORK RESISTOR 22 (1608)
RB1007	1-239-621-11	s	NETWORK RESISTOR 22 (1608)
RB1008	1-239-621-11	s	NETWORK RESISTOR 22 (1608)
RB1009	1-239-409-11	s	RESISTOR NETWORK 47 (1608)
RB1010	1-239-409-11	s	RESISTOR NETWORK 47 (1608)
RV800	1-237-033-11	s	RESISTOR,ADJ,CERMET 1K
RV801	1-237-033-11	s	RESISTOR,ADJ,CERMET 1K
S50	1-692-881-41	s	SWITCH, SLIDE
S900	1-692-270-41	s	SWITCH, SLIDE
X801	1-767-694-11	s	OSCILLATOR, CRYSTAL
X802	1-781-496-11	s	OSCILLATOR, CRYSTAL
X803	1-781-830-11	s	OSCILLATOR, CRYSTAL
X804	1-781-831-11	s	OSCILLATOR, CRYSTAL
X805	1-781-671-11	s	OSCILLATOR, CRYSTAL
X807	1-781-672-11	s	OSCILLATOR, CRYSTAL

HIF-1A BOARD [SUFFIX 22, 23] for HDW PLAYER

[Lot No. 2B3-3B4] HDW-M2100/P, A2100

*1: [SUFFIX 22]
*2: [SUFFIX 23]

Ref. No. or Q'ty	Part No.	SP	Description
1pc	A-8327-115-C	s	MOUNTED CIRCUIT BOARD, HIF-1A
1pc	3-629-706-03	o	COVER,SHIELD HIF
1pc	3-701-822-00	s	HOLDER, WIRE
2pcs	7-621-772-18	s	SCREW +B M2X4
6pcs	7-682-902-11	s	SCREW +PWH 2.6X5
1pc	3-179-084-21	s	LEVER (R), PC BOARD
1pc	3-179-085-21	s	LEVER (L), PC BOARD
1pc	3-629-707-02	o	CASE,SHIELD HIF
C54	1-107-826-11	s	CAPACITOR,CHIP CERAMIC 0.1MF
C55	1-107-826-11	s	CAPACITOR,CHIP CERAMIC 0.1MF
C57	1-107-826-11	s	CAPACITOR,CHIP CERAMIC 0.1MF
C59	1-107-826-11	s	CAPACITOR,CHIP CERAMIC 0.1MF
C60	1-107-826-11	s	CAPACITOR,CHIP CERAMIC 0.1MF
C61	1-107-826-11	s	CAPACITOR,CHIP CERAMIC 0.1MF
C62	1-107-826-11	s	CAPACITOR,CHIP CERAMIC 0.1MF
C63	1-107-826-11	s	CAPACITOR,CHIP CERAMIC 0.1MF
C64	1-107-826-11	s	CAPACITOR,CHIP CERAMIC 0.1MF
C65	1-107-826-11	s	CAPACITOR,CHIP CERAMIC 0.1MF
C66	1-107-826-11	s	CAPACITOR,CHIP CERAMIC 0.1MF
C67	1-107-826-11	s	CAPACITOR,CHIP CERAMIC 0.1MF
C68	1-107-826-11	s	CAPACITOR,CHIP CERAMIC 0.1MF
C102	1-107-826-11	s	CAPACITOR,CHIP CERAMIC 0.1MF
C103	1-107-826-11	s	CAPACITOR,CHIP CERAMIC 0.1MF
C104	1-107-826-11	s	CAPACITOR,CHIP CERAMIC 0.1MF
C110	1-107-826-11	s	CAPACITOR,CHIP CERAMIC 0.1MF
C111	1-107-826-11	s	CAPACITOR,CHIP CERAMIC 0.1MF
C112	1-107-826-11	s	CAPACITOR,CHIP CERAMIC 0.1MF
C200	1-107-826-11	s	CAPACITOR,CHIP CERAMIC 0.1MF
C201	1-107-826-11	s	CAPACITOR,CHIP CERAMIC 0.1MF
C202	1-107-826-11	s	CAPACITOR,CHIP CERAMIC 0.1MF
C203	1-107-826-11	s	CAPACITOR,CHIP CERAMIC 0.1MF
C204	1-107-826-11	s	CAPACITOR,CHIP CERAMIC 0.1MF
C205	1-107-826-11	s	CAPACITOR,CHIP CERAMIC 0.1MF
C206	1-127-692-11	s	CAP, CHIP CERAMIC 10MF B 3216
C207	1-107-826-11	s	CAPACITOR,CHIP CERAMIC 0.1MF
C208	1-107-826-11	s	CAPACITOR,CHIP CERAMIC 0.1MF
C209	1-107-826-11	s	CAPACITOR,CHIP CERAMIC 0.1MF
C210	1-107-826-11	s	CAPACITOR,CHIP CERAMIC 0.1MF
C211	1-127-692-11	s	CAP, CHIP CERAMIC 10MF B 3216
C212	1-107-826-11	s	CAPACITOR,CHIP CERAMIC 0.1MF
C213	1-107-826-11	s	CAPACITOR,CHIP CERAMIC 0.1MF
C214	1-107-826-11	s	CAPACITOR,CHIP CERAMIC 0.1MF
C215	1-107-826-11	s	CAPACITOR,CHIP CERAMIC 0.1MF
C216	1-107-826-11	s	CAPACITOR,CHIP CERAMIC 0.1MF
C217	1-107-826-11	s	CAPACITOR,CHIP CERAMIC 0.1MF
C218	1-107-826-11	s	CAPACITOR,CHIP CERAMIC 0.1MF
C219	1-107-826-11	s	CAPACITOR,CHIP CERAMIC 0.1MF
C220	1-107-826-11	s	CAPACITOR,CHIP CERAMIC 0.1MF
C221	1-107-826-11	s	CAPACITOR,CHIP CERAMIC 0.1MF
C222	1-107-826-11	s	CAPACITOR,CHIP CERAMIC 0.1MF
C223	1-107-826-11	s	CAPACITOR,CHIP CERAMIC 0.1MF
C226	1-127-692-11	s	CAP, CHIP CERAMIC 10MF B 3216
C227	1-125-889-11	s	CAPACITOR, C.CERAMIC 2.2MF
C228	1-125-889-11	s	CAPACITOR, C.CERAMIC 2.2MF

(HIF-1A BOARD [SUFFIX 22, 23] for HDW PLAYER)

Ref. No. or Q'ty	Part No.	SP	Description
C229	1-107-826-11	s	CAPACITOR,CHIP CERAMIC 0.1MF
C300	1-107-826-11	s	CAPACITOR,CHIP CERAMIC 0.1MF
C301	1-107-826-11	s	CAPACITOR,CHIP CERAMIC 0.1MF
C302	1-107-826-11	s	CAPACITOR,CHIP CERAMIC 0.1MF
C303	1-107-826-11	s	CAPACITOR,CHIP CERAMIC 0.1MF
C304	1-107-826-11	s	CAPACITOR,CHIP CERAMIC 0.1MF
C305	1-107-826-11	s	CAPACITOR,CHIP CERAMIC 0.1MF
C306	1-107-826-11	s	CAPACITOR,CHIP CERAMIC 0.1MF
C307	1-107-826-11	s	CAPACITOR,CHIP CERAMIC 0.1MF
C308	1-107-826-11	s	CAPACITOR,CHIP CERAMIC 0.1MF
C309	1-107-826-11	s	CAPACITOR,CHIP CERAMIC 0.1MF
C310	1-107-826-11	s	CAPACITOR,CHIP CERAMIC 0.1MF
C311	1-107-826-11	s	CAPACITOR,CHIP CERAMIC 0.1MF
C312	1-107-826-11	s	CAPACITOR,CHIP CERAMIC 0.1MF
C313	1-107-826-11	s	CAPACITOR,CHIP CERAMIC 0.1MF
C314	1-107-826-11	s	CAPACITOR,CHIP CERAMIC 0.1MF
C315	1-107-826-11	s	CAPACITOR,CHIP CERAMIC 0.1MF
C316	1-107-826-11	s	CAPACITOR,CHIP CERAMIC 0.1MF
C317	1-107-826-11	s	CAPACITOR,CHIP CERAMIC 0.1MF
C318	1-107-826-11	s	CAPACITOR,CHIP CERAMIC 0.1MF
C319	1-107-826-11	s	CAPACITOR,CHIP CERAMIC 0.1MF
C320	1-107-826-11	s	CAPACITOR,CHIP CERAMIC 0.1MF
C321	1-107-826-11	s	CAPACITOR,CHIP CERAMIC 0.1MF
C322	1-107-826-11	s	CAPACITOR,CHIP CERAMIC 0.1MF
C323	1-107-826-11	s	CAPACITOR,CHIP CERAMIC 0.1MF
C324	1-107-826-11	s	CAPACITOR,CHIP CERAMIC 0.1MF
C325	1-107-826-11	s	CAPACITOR,CHIP CERAMIC 0.1MF
C326	1-107-826-11	s	CAPACITOR,CHIP CERAMIC 0.1MF
C327	1-107-826-11	s	CAPACITOR,CHIP CERAMIC 0.1MF
C328	1-107-826-11	s	CAPACITOR,CHIP CERAMIC 0.1MF
C329	1-127-708-11	s	CAP, POLYPYRROLE 100MF
C330	1-127-708-11	s	CAP, POLYPYRROLE 100MF
C331	1-107-826-11	s	CAPACITOR,CHIP CERAMIC 0.1MF
C332	1-107-826-11	s	CAPACITOR,CHIP CERAMIC 0.1MF
C333	1-107-826-11	s	CAPACITOR,CHIP CERAMIC 0.1MF
C334	1-107-826-11	s	CAPACITOR,CHIP CERAMIC 0.1MF
C335	1-107-826-11	s	CAPACITOR,CHIP CERAMIC 0.1MF
C336	1-107-826-11	s	CAPACITOR,CHIP CERAMIC 0.1MF
C337	1-107-826-11	s	CAPACITOR,CHIP CERAMIC 0.1MF
C338	1-107-826-11	s	CAPACITOR,CHIP CERAMIC 0.1MF
C339	1-107-826-11	s	CAPACITOR,CHIP CERAMIC 0.1MF
C340	1-107-826-11	s	CAPACITOR,CHIP CERAMIC 0.1MF
C341	1-107-826-11	s	CAPACITOR,CHIP CERAMIC 0.1MF
C342	1-107-826-11	s	CAPACITOR,CHIP CERAMIC 0.1MF
C343	1-107-826-11	s	CAPACITOR,CHIP CERAMIC 0.1MF
C344	1-107-826-11	s	CAPACITOR,CHIP CERAMIC 0.1MF
C345	1-107-826-11	s	CAPACITOR,CHIP CERAMIC 0.1MF
C346	1-107-826-11	s	CAPACITOR,CHIP CERAMIC 0.1MF
C347	1-107-826-11	s	CAPACITOR,CHIP CERAMIC 0.1MF
C348	1-164-227-11	s	CAPACITOR,CERAMIC 0.022MF/25V
C400	1-107-826-11	s	CAPACITOR,CHIP CERAMIC 0.1MF
C401	1-107-826-11	s	CAPACITOR,CHIP CERAMIC 0.1MF
C402	1-107-826-11	s	CAPACITOR,CHIP CERAMIC 0.1MF
C403	1-107-826-11	s	CAPACITOR,CHIP CERAMIC 0.1MF
C404	1-107-826-11	s	CAPACITOR,CHIP CERAMIC 0.1MF
C405	1-107-826-11	s	CAPACITOR,CHIP CERAMIC 0.1MF
C406	1-107-826-11	s	CAPACITOR,CHIP CERAMIC 0.1MF
C407	1-107-826-11	s	CAPACITOR,CHIP CERAMIC 0.1MF
C408	1-107-826-11	s	CAPACITOR,CHIP CERAMIC 0.1MF

(HIF-1A BOARD [SUFFIX 22, 23] for HDW PLAYER)

Ref. No. or Q'ty	Part No.	SP	Description
C409	1-107-826-11	s	CAPACITOR,CHIP CERAMIC 0.1MF
C410	1-107-826-11	s	CAPACITOR,CHIP CERAMIC 0.1MF
C411	1-107-826-11	s	CAPACITOR,CHIP CERAMIC 0.1MF
C412	1-107-826-11	s	CAPACITOR,CHIP CERAMIC 0.1MF
C413	1-107-826-11	s	CAPACITOR,CHIP CERAMIC 0.1MF
C414	1-107-826-11	s	CAPACITOR,CHIP CERAMIC 0.1MF
C415	1-107-826-11	s	CAPACITOR,CHIP CERAMIC 0.1MF
C416	1-107-826-11	s	CAPACITOR,CHIP CERAMIC 0.1MF
C417	1-107-826-11	s	CAPACITOR,CHIP CERAMIC 0.1MF
C418	1-107-826-11	s	CAPACITOR,CHIP CERAMIC 0.1MF
C419	1-107-826-11	s	CAPACITOR,CHIP CERAMIC 0.1MF
C420	1-107-826-11	s	CAPACITOR,CHIP CERAMIC 0.1MF
C421	1-107-826-11	s	CAPACITOR,CHIP CERAMIC 0.1MF
C422	1-107-826-11	s	CAPACITOR,CHIP CERAMIC 0.1MF
C423	1-107-826-11	s	CAPACITOR,CHIP CERAMIC 0.1MF
C424	1-107-826-11	s	CAPACITOR,CHIP CERAMIC 0.1MF
C425	1-107-826-11	s	CAPACITOR,CHIP CERAMIC 0.1MF
C426	1-107-826-11	s	CAPACITOR,CHIP CERAMIC 0.1MF
C427	1-107-826-11	s	CAPACITOR,CHIP CERAMIC 0.1MF
C428	1-107-826-11	s	CAPACITOR,CHIP CERAMIC 0.1MF
C429	1-107-826-11	s	CAPACITOR,CHIP CERAMIC 0.1MF
C430	1-107-826-11	s	CAPACITOR,CHIP CERAMIC 0.1MF
C431	1-107-826-11	s	CAPACITOR,CHIP CERAMIC 0.1MF
C432	1-107-826-11	s	CAPACITOR,CHIP CERAMIC 0.1MF
C433	1-107-826-11	s	CAPACITOR,CHIP CERAMIC 0.1MF
C434	1-107-826-11	s	CAPACITOR,CHIP CERAMIC 0.1MF
C435	1-107-826-11	s	CAPACITOR,CHIP CERAMIC 0.1MF
C436	1-107-826-11	s	CAPACITOR,CHIP CERAMIC 0.1MF
C437	1-107-826-11	s	CAPACITOR,CHIP CERAMIC 0.1MF
C438	1-107-826-11	s	CAPACITOR,CHIP CERAMIC 0.1MF
C439	1-107-826-11	s	CAPACITOR,CHIP CERAMIC 0.1MF
C440	1-127-692-11	s	CAP, CHIP CERAMIC 10MF B 3216
C441	1-127-692-11	s	CAP, CHIP CERAMIC 10MF B 3216
C442	1-107-826-11	s	CAPACITOR,CHIP CERAMIC 0.1MF
C443	1-107-826-11	s	CAPACITOR,CHIP CERAMIC 0.1MF
C444	1-107-826-11	s	CAPACITOR,CHIP CERAMIC 0.1MF
C445	1-107-826-11	s	CAPACITOR,CHIP CERAMIC 0.1MF
C446	1-107-826-11	s	CAPACITOR,CHIP CERAMIC 0.1MF
C447	1-107-826-11	s	CAPACITOR,CHIP CERAMIC 0.1MF
C448	1-107-826-11	s	CAPACITOR,CHIP CERAMIC 0.1MF
C449	1-107-826-11	s	CAPACITOR,CHIP CERAMIC 0.1MF
C450	1-127-692-11	s	CAP, CHIP CERAMIC 10MF B 3216
C451	1-127-692-11	s	CAP, CHIP CERAMIC 10MF B 3216
C452	1-107-826-11	s	CAPACITOR,CHIP CERAMIC 0.1MF
C453	1-107-826-11	s	CAPACITOR,CHIP CERAMIC 0.1MF
C454	1-107-826-11	s	CAPACITOR,CHIP CERAMIC 0.1MF
C455	1-107-826-11	s	CAPACITOR,CHIP CERAMIC 0.1MF
C456	1-107-826-11	s	CAPACITOR,CHIP CERAMIC 0.1MF
C457	1-107-826-11	s	CAPACITOR,CHIP CERAMIC 0.1MF
C527	1-107-826-11	s	CAPACITOR,CHIP CERAMIC 0.1MF
C528	1-107-826-11	s	CAPACITOR,CHIP CERAMIC 0.1MF
C529	1-107-826-11	s	CAPACITOR,CHIP CERAMIC 0.1MF
C530	1-107-826-11	s	CAPACITOR,CHIP CERAMIC 0.1MF
C531	1-107-826-11	s	CAPACITOR,CHIP CERAMIC 0.1MF
C532	1-107-826-11	s	CAPACITOR,CHIP CERAMIC 0.1MF
C533	1-107-826-11	s	CAPACITOR,CHIP CERAMIC 0.1MF
C534	1-107-826-11	s	CAPACITOR,CHIP CERAMIC 0.1MF
C535	1-107-826-11	s	CAPACITOR,CHIP CERAMIC 0.1MF
C536	1-107-826-11	s	CAPACITOR,CHIP CERAMIC 0.1MF

(HIF-1A BOARD [SUFFIX 22, 23] for HDW PLAYER)

Ref. No. or Q'ty	Part No.	SP	Description
C537	1-107-826-11	s	CAPACITOR,CHIP CERAMIC 0.1MF
C538	1-107-826-11	s	CAPACITOR,CHIP CERAMIC 0.1MF
C539	1-107-826-11	s	CAPACITOR,CHIP CERAMIC 0.1MF
C540	1-107-826-11	s	CAPACITOR,CHIP CERAMIC 0.1MF
C541	1-107-826-11	s	CAPACITOR,CHIP CERAMIC 0.1MF
C542	1-107-826-11	s	CAPACITOR,CHIP CERAMIC 0.1MF
C543	1-107-826-11	s	CAPACITOR,CHIP CERAMIC 0.1MF
C544	1-107-826-11	s	CAPACITOR,CHIP CERAMIC 0.1MF
C545	1-107-826-11	s	CAPACITOR,CHIP CERAMIC 0.1MF
C546	1-107-826-11	s	CAPACITOR,CHIP CERAMIC 0.1MF
C547	1-107-826-11	s	CAPACITOR,CHIP CERAMIC 0.1MF
C548	1-107-826-11	s	CAPACITOR,CHIP CERAMIC 0.1MF
C549	1-107-826-11	s	CAPACITOR,CHIP CERAMIC 0.1MF
C550	1-107-826-11	s	CAPACITOR,CHIP CERAMIC 0.1MF
C551	1-107-826-11	s	CAPACITOR,CHIP CERAMIC 0.1MF
C552	1-107-826-11	s	CAPACITOR,CHIP CERAMIC 0.1MF
C553	1-107-826-11	s	CAPACITOR,CHIP CERAMIC 0.1MF
C555	1-127-708-11	s	CAP, POLYPYRROLE 100MF
C600	1-107-826-11	s	CAPACITOR,CHIP CERAMIC 0.1MF
C601	1-107-826-11	s	CAPACITOR,CHIP CERAMIC 0.1MF
C602	1-107-826-11	s	CAPACITOR,CHIP CERAMIC 0.1MF
C603	1-107-826-11	s	CAPACITOR,CHIP CERAMIC 0.1MF
C604	1-107-826-11	s	CAPACITOR,CHIP CERAMIC 0.1MF
C605	1-107-826-11	s	CAPACITOR,CHIP CERAMIC 0.1MF
C606	1-107-826-11	s	CAPACITOR,CHIP CERAMIC 0.1MF
C607	1-107-826-11	s	CAPACITOR,CHIP CERAMIC 0.1MF
C608	1-107-826-11	s	CAPACITOR,CHIP CERAMIC 0.1MF
C609	1-107-826-11	s	CAPACITOR,CHIP CERAMIC 0.1MF
C610	1-107-826-11	s	CAPACITOR,CHIP CERAMIC 0.1MF
C611	1-107-826-11	s	CAPACITOR,CHIP CERAMIC 0.1MF
C612	1-107-826-11	s	CAPACITOR,CHIP CERAMIC 0.1MF
C613	1-107-826-11	s	CAPACITOR,CHIP CERAMIC 0.1MF
C614	1-107-826-11	s	CAPACITOR,CHIP CERAMIC 0.1MF
C615	1-127-708-11	s	CAP, POLYPYRROLE 100MF
C616	1-127-708-11	s	CAP, POLYPYRROLE 100MF
C617	1-107-826-11	s	CAPACITOR,CHIP CERAMIC 0.1MF
C618	1-107-826-11	s	CAPACITOR,CHIP CERAMIC 0.1MF
C619	1-107-826-11	s	CAPACITOR,CHIP CERAMIC 0.1MF
C620	1-107-826-11	s	CAPACITOR,CHIP CERAMIC 0.1MF
C621	1-107-826-11	s	CAPACITOR,CHIP CERAMIC 0.1MF
C622	1-107-826-11	s	CAPACITOR,CHIP CERAMIC 0.1MF
C623	1-107-826-11	s	CAPACITOR,CHIP CERAMIC 0.1MF
C624	1-107-826-11	s	CAPACITOR,CHIP CERAMIC 0.1MF
C625	1-107-826-11	s	CAPACITOR,CHIP CERAMIC 0.1MF
C626	1-107-826-11	s	CAPACITOR,CHIP CERAMIC 0.1MF
C627	1-107-826-11	s	CAPACITOR,CHIP CERAMIC 0.1MF
C628	1-107-826-11	s	CAPACITOR,CHIP CERAMIC 0.1MF
C629	1-107-826-11	s	CAPACITOR,CHIP CERAMIC 0.1MF
C630	1-107-826-11	s	CAPACITOR,CHIP CERAMIC 0.1MF
C631	1-107-826-11	s	CAPACITOR,CHIP CERAMIC 0.1MF
C632	1-107-826-11	s	CAPACITOR,CHIP CERAMIC 0.1MF
C633	1-107-826-11	s	CAPACITOR,CHIP CERAMIC 0.1MF
C634	1-107-826-11	s	CAPACITOR,CHIP CERAMIC 0.1MF
C635	1-107-826-11	s	CAPACITOR,CHIP CERAMIC 0.1MF
C636	1-107-826-11	s	CAPACITOR,CHIP CERAMIC 0.1MF
C637	1-107-826-11	s	CAPACITOR,CHIP CERAMIC 0.1MF
C638	1-107-826-11	s	CAPACITOR,CHIP CERAMIC 0.1MF
C701	1-107-826-11	s	CAPACITOR,CHIP CERAMIC 0.1MF
C702	1-107-826-11	s	CAPACITOR,CHIP CERAMIC 0.1MF

(HIF-1A BOARD [SUFFIX 22, 23] for HDW PLAYER)

Ref. No. or Q'ty	Part No.	SP	Description
C704	1-107-826-11	s	CAPACITOR,CHIP CERAMIC 0.1MF
C705	1-107-826-11	s	CAPACITOR,CHIP CERAMIC 0.1MF
C706	1-107-826-11	s	CAPACITOR,CHIP CERAMIC 0.1MF
C707	1-107-826-11	s	CAPACITOR,CHIP CERAMIC 0.1MF
C708	1-127-692-11	s	CAP, CHIP CERAMIC 10MF B 3216
C709	1-107-826-11	s	CAPACITOR,CHIP CERAMIC 0.1MF
C710	1-107-826-11	s	CAPACITOR,CHIP CERAMIC 0.1MF
C711	1-107-826-11	s	CAPACITOR,CHIP CERAMIC 0.1MF
C712	1-107-826-11	s	CAPACITOR,CHIP CERAMIC 0.1MF
C713	1-127-692-11	s	CAP, CHIP CERAMIC 10MF B 3216
C714	1-107-826-11	s	CAPACITOR,CHIP CERAMIC 0.1MF
C719	1-107-826-11	s	CAPACITOR,CHIP CERAMIC 0.1MF
C720	*2 deleted		
	*1 1-107-826-11	s	CAPACITOR,CHIP CERAMIC 0.1MF
C721	1-107-826-11	s	CAPACITOR,CHIP CERAMIC 0.1MF
C722	1-107-826-11	s	CAPACITOR,CHIP CERAMIC 0.1MF
C723	*2 deleted		
	*1 1-107-826-11	s	CAPACITOR,CHIP CERAMIC 0.1MF
C724	1-107-826-11	s	CAPACITOR,CHIP CERAMIC 0.1MF
C726	*2 deleted		
	*1 1-107-826-11	s	CAPACITOR,CHIP CERAMIC 0.1MF
C727	1-107-826-11	s	CAPACITOR,CHIP CERAMIC 0.1MF
C728	1-107-826-11	s	CAPACITOR,CHIP CERAMIC 0.1MF
C729	*2 deleted		
	*1 1-107-826-11	s	CAPACITOR,CHIP CERAMIC 0.1MF
C730	1-107-826-11	s	CAPACITOR,CHIP CERAMIC 0.1MF
C731	1-107-826-11	s	CAPACITOR,CHIP CERAMIC 0.1MF
C732	*2 deleted		
	*1 1-127-692-11	s	CAP, CHIP CERAMIC 10MF B 3216
C733	1-127-692-11	s	CAP, CHIP CERAMIC 10MF B 3216
C734	1-127-692-11	s	CAP, CHIP CERAMIC 10MF B 3216
C737	1-107-826-11	s	CAPACITOR,CHIP CERAMIC 0.1MF
C742	1-107-826-11	s	CAPACITOR,CHIP CERAMIC 0.1MF
C744	1-107-826-11	s	CAPACITOR,CHIP CERAMIC 0.1MF
C745	1-107-826-11	s	CAPACITOR,CHIP CERAMIC 0.1MF
C746	1-162-970-11	s	CAPACITOR CERAMIC 0.01MF/25V B
C747	*2 1-107-826-11	s	CAPACITOR,CHIP CERAMIC 0.1MF
C800	1-127-708-11	s	CAP, POLYPYRROLE 100MF
C801	1-127-708-11	s	CAP, POLYPYRROLE 100MF
C802	1-107-826-11	s	CAPACITOR,CHIP CERAMIC 0.1MF
C803	1-107-826-11	s	CAPACITOR,CHIP CERAMIC 0.1MF
C804	1-107-826-11	s	CAPACITOR,CHIP CERAMIC 0.1MF
C805	1-107-826-11	s	CAPACITOR,CHIP CERAMIC 0.1MF
C806	1-107-826-11	s	CAPACITOR,CHIP CERAMIC 0.1MF
C807	1-107-826-11	s	CAPACITOR,CHIP CERAMIC 0.1MF
C808	1-107-826-11	s	CAPACITOR,CHIP CERAMIC 0.1MF
C809	1-107-826-11	s	CAPACITOR,CHIP CERAMIC 0.1MF
C810	1-107-826-11	s	CAPACITOR,CHIP CERAMIC 0.1MF
C811	1-107-826-11	s	CAPACITOR,CHIP CERAMIC 0.1MF
C812	1-107-826-11	s	CAPACITOR,CHIP CERAMIC 0.1MF
C813	1-107-826-11	s	CAPACITOR,CHIP CERAMIC 0.1MF
C814	1-107-826-11	s	CAPACITOR,CHIP CERAMIC 0.1MF
C815	1-107-826-11	s	CAPACITOR,CHIP CERAMIC 0.1MF
C816	1-107-826-11	s	CAPACITOR,CHIP CERAMIC 0.1MF
C817	1-107-826-11	s	CAPACITOR,CHIP CERAMIC 0.1MF
C818	1-107-826-11	s	CAPACITOR,CHIP CERAMIC 0.1MF
C819	1-107-826-11	s	CAPACITOR,CHIP CERAMIC 0.1MF
C820	1-107-826-11	s	CAPACITOR,CHIP CERAMIC 0.1MF
C821	1-107-826-11	s	CAPACITOR,CHIP CERAMIC 0.1MF
C822	1-107-826-11	s	CAPACITOR,CHIP CERAMIC 0.1MF

(HIF-1A BOARD [SUFFIX 22, 23] for HDW PLAYER)

Ref. No. or Q'ty	Part No.	SP	Description
C823	1-107-826-11	s	CAPACITOR,CHIP CERAMIC 0.1MF
C824	1-107-826-11	s	CAPACITOR,CHIP CERAMIC 0.1MF
C825	1-107-826-11	s	CAPACITOR,CHIP CERAMIC 0.1MF
C826	1-107-826-11	s	CAPACITOR,CHIP CERAMIC 0.1MF
C827	1-107-826-11	s	CAPACITOR,CHIP CERAMIC 0.1MF
C828	1-107-826-11	s	CAPACITOR,CHIP CERAMIC 0.1MF
C829	1-107-826-11	s	CAPACITOR,CHIP CERAMIC 0.1MF
C830	1-107-826-11	s	CAPACITOR,CHIP CERAMIC 0.1MF
C831	1-107-826-11	s	CAPACITOR,CHIP CERAMIC 0.1MF
C832	1-107-826-11	s	CAPACITOR,CHIP CERAMIC 0.1MF
C833	1-107-826-11	s	CAPACITOR,CHIP CERAMIC 0.1MF
C834	1-107-826-11	s	CAPACITOR,CHIP CERAMIC 0.1MF
C835	1-107-826-11	s	CAPACITOR,CHIP CERAMIC 0.1MF
C836	1-107-826-11	s	CAPACITOR,CHIP CERAMIC 0.1MF
C837	1-107-826-11	s	CAPACITOR,CHIP CERAMIC 0.1MF
C838	1-162-919-11	s	CAPACITOR,CERAMIC 22PF/50V CH
C839	1-162-928-11	s	CAPACITOR,CERAMIC 120PF/50V CH
C840	1-107-826-11	s	CAPACITOR,CHIP CERAMIC 0.1MF
C841	1-107-826-11	s	CAPACITOR,CHIP CERAMIC 0.1MF
C842	1-107-826-11	s	CAPACITOR,CHIP CERAMIC 0.1MF
C843	1-125-891-11	s	CAPACITOR CERAMIC 0.47MF/10V
C844	1-125-891-11	s	CAPACITOR CERAMIC 0.47MF/10V
C845	1-107-826-11	s	CAPACITOR,CHIP CERAMIC 0.1MF
C846	1-107-826-11	s	CAPACITOR,CHIP CERAMIC 0.1MF
C847	1-107-826-11	s	CAPACITOR,CHIP CERAMIC 0.1MF
C848	1-162-923-11	s	CAPACITOR,CERAMIC 47PF/50V CH
C849	1-162-970-11	s	CAPACITOR CERAMIC 0.01MF/25V B
C850	1-107-826-11	s	CAPACITOR,CHIP CERAMIC 0.1MF
C851	1-162-928-11	s	CAPACITOR,CERAMIC 120PF/50V CH
C852	1-107-826-11	s	CAPACITOR,CHIP CERAMIC 0.1MF
C853	1-162-927-11	s	CAPACITOR,CERAMIC 100PF/50V CH
C854	1-107-826-11	s	CAPACITOR,CHIP CERAMIC 0.1MF
C855	1-162-923-11	s	CAPACITOR,CERAMIC 47PF/50V CH
C856	1-107-826-11	s	CAPACITOR,CHIP CERAMIC 0.1MF
C857	1-107-826-11	s	CAPACITOR,CHIP CERAMIC 0.1MF
C858	1-162-924-11	s	CAPACITOR,CERAMIC 56PF/50V CH
C859	1-107-826-11	s	CAPACITOR,CHIP CERAMIC 0.1MF
C860	1-107-826-11	s	CAPACITOR,CHIP CERAMIC 0.1MF
C861	1-107-826-11	s	CAPACITOR,CHIP CERAMIC 0.1MF
C862	1-162-928-11	s	CAPACITOR,CERAMIC 120PF/50V CH
C863	1-107-826-11	s	CAPACITOR,CHIP CERAMIC 0.1MF
C864	1-162-928-11	s	CAPACITOR,CERAMIC 120PF/50V CH
C865	1-127-950-11	s	CAPACITOR,CHIP FILM 0.01MF
C866	1-127-950-11	s	CAPACITOR,CHIP FILM 0.01MF
C867	1-127-950-11	s	CAPACITOR,CHIP FILM 0.01MF
C868	1-127-956-11	s	CAPACITOR,CHIP FILM 0.1MF
C869	1-127-956-11	s	CAPACITOR,CHIP FILM 0.1MF
C870	1-127-956-11	s	CAPACITOR,CHIP FILM 0.1MF
C871	1-127-950-11	s	CAPACITOR,CHIP FILM 0.01MF
C872	1-127-956-11	s	CAPACITOR,CHIP FILM 0.1MF
C873	1-107-826-11	s	CAPACITOR,CHIP CERAMIC 0.1MF
C874	1-107-826-11	s	CAPACITOR,CHIP CERAMIC 0.1MF
C875	1-107-826-11	s	CAPACITOR,CHIP CERAMIC 0.1MF
C876	1-107-826-11	s	CAPACITOR,CHIP CERAMIC 0.1MF
C877	1-107-826-11	s	CAPACITOR,CHIP CERAMIC 0.1MF
C878	1-107-826-11	s	CAPACITOR,CHIP CERAMIC 0.1MF
C879	1-107-826-11	s	CAPACITOR,CHIP CERAMIC 0.1MF
C880	1-107-826-11	s	CAPACITOR,CHIP CERAMIC 0.1MF
C881	1-107-826-11	s	CAPACITOR,CHIP CERAMIC 0.1MF

(HIF-1A BOARD [SUFFIX 22, 23] for HDW PLAYER)

Ref. No. or Q'ty	Part No.	SP	Description
C882	1-107-826-11	s	CAPACITOR,CHIP CERAMIC 0.1MF
C883	1-107-826-11	s	CAPACITOR,CHIP CERAMIC 0.1MF
C884	1-107-826-11	s	CAPACITOR,CHIP CERAMIC 0.1MF
C885	1-127-692-11	s	CAP, CHIP CERAMIC 10MF B 3216
C886	1-107-826-11	s	CAPACITOR,CHIP CERAMIC 0.1MF
C887	1-107-826-11	s	CAPACITOR,CHIP CERAMIC 0.1MF
C888	1-107-826-11	s	CAPACITOR,CHIP CERAMIC 0.1MF
C889	1-107-826-11	s	CAPACITOR,CHIP CERAMIC 0.1MF
C890	1-107-826-11	s	CAPACITOR,CHIP CERAMIC 0.1MF
C891	1-107-826-11	s	CAPACITOR,CHIP CERAMIC 0.1MF
C892	1-107-826-11	s	CAPACITOR,CHIP CERAMIC 0.1MF
C893	1-107-826-11	s	CAPACITOR,CHIP CERAMIC 0.1MF
C894	1-107-826-11	s	CAPACITOR,CHIP CERAMIC 0.1MF
C895	1-107-826-11	s	CAPACITOR,CHIP CERAMIC 0.1MF
C896	1-107-826-11	s	CAPACITOR,CHIP CERAMIC 0.1MF
C897	1-107-826-11	s	CAPACITOR,CHIP CERAMIC 0.1MF
C898	1-107-826-11	s	CAPACITOR,CHIP CERAMIC 0.1MF
C899	1-107-826-11	s	CAPACITOR,CHIP CERAMIC 0.1MF
C900	1-162-970-11	s	CAPACITOR CERAMIC 0.01MF/25V B
C902	1-107-826-11	s	CAPACITOR,CHIP CERAMIC 0.1MF
C903	1-107-826-11	s	CAPACITOR,CHIP CERAMIC 0.1MF
C904	1-107-826-11	s	CAPACITOR,CHIP CERAMIC 0.1MF
C905	1-107-826-11	s	CAPACITOR,CHIP CERAMIC 0.1MF
C907	1-107-826-11	s	CAPACITOR,CHIP CERAMIC 0.1MF
C908	1-107-826-11	s	CAPACITOR,CHIP CERAMIC 0.1MF
C909	1-107-826-11	s	CAPACITOR,CHIP CERAMIC 0.1MF
C910	1-162-970-11	s	CAPACITOR CERAMIC 0.01MF/25V B
C911	1-107-826-11	s	CAPACITOR,CHIP CERAMIC 0.1MF
C912	1-107-826-11	s	CAPACITOR,CHIP CERAMIC 0.1MF
C913	1-107-826-11	s	CAPACITOR,CHIP CERAMIC 0.1MF
C914	1-107-826-11	s	CAPACITOR,CHIP CERAMIC 0.1MF
C915	1-107-826-11	s	CAPACITOR,CHIP CERAMIC 0.1MF
C916	1-107-826-11	s	CAPACITOR,CHIP CERAMIC 0.1MF
C917	1-107-826-11	s	CAPACITOR,CHIP CERAMIC 0.1MF
C918	1-107-826-11	s	CAPACITOR,CHIP CERAMIC 0.1MF
C919	1-107-826-11	s	CAPACITOR,CHIP CERAMIC 0.1MF
C920	1-107-826-11	s	CAPACITOR,CHIP CERAMIC 0.1MF
C921	1-107-826-11	s	CAPACITOR,CHIP CERAMIC 0.1MF
C922	1-107-826-11	s	CAPACITOR,CHIP CERAMIC 0.1MF
C923	1-107-826-11	s	CAPACITOR,CHIP CERAMIC 0.1MF
C924	1-107-826-11	s	CAPACITOR,CHIP CERAMIC 0.1MF
C925	1-162-927-11	s	CAPACITOR,CERAMIC 100PF/50V CH
C926	1-162-927-11	s	CAPACITOR,CERAMIC 100PF/50V CH
C927	1-162-927-11	s	CAPACITOR,CERAMIC 100PF/50V CH
C1000	1-127-708-11	s	CAP, POLYPYRROLE 100MF
C1001	1-127-708-11	s	CAP, POLYPYRROLE 100MF
C1002	1-127-708-11	s	CAP, POLYPYRROLE 100MF
C1003	1-107-826-11	s	CAPACITOR,CHIP CERAMIC 0.1MF
C1004	1-107-826-11	s	CAPACITOR,CHIP CERAMIC 0.1MF
C1005	1-107-826-11	s	CAPACITOR,CHIP CERAMIC 0.1MF
C1006	1-107-826-11	s	CAPACITOR,CHIP CERAMIC 0.1MF
C1007	1-107-826-11	s	CAPACITOR,CHIP CERAMIC 0.1MF
C1008	1-107-826-11	s	CAPACITOR,CHIP CERAMIC 0.1MF
C1009	1-107-826-11	s	CAPACITOR,CHIP CERAMIC 0.1MF
C1010	1-107-826-11	s	CAPACITOR,CHIP CERAMIC 0.1MF
C1011	1-107-826-11	s	CAPACITOR,CHIP CERAMIC 0.1MF
C1012	1-107-826-11	s	CAPACITOR,CHIP CERAMIC 0.1MF
C1015	1-127-708-11	s	CAP, POLYPYRROLE 100MF
C1017	1-127-708-11	s	CAP, POLYPYRROLE 100MF

(HIF-1A BOARD [SUFFIX 22, 23] for HDW PLAYER)

Ref. No. or Q'ty	Part No.	SP	Description
C1019	1-131-603-11	s	CAP, POLYPYRROLE 100MF
C1022	1-162-970-11	s	CAPACITOR CERAMIC 0.01MF/25V B
C1025	1-107-826-11	s	CAPACITOR,CHIP CERAMIC 0.1MF
C1026	1-107-826-11	s	CAPACITOR,CHIP CERAMIC 0.1MF
C1029	1-115-416-11	s	CAPACITOR,CERAMIC 1000PF/25V
C1031	1-107-826-11	s	CAPACITOR,CHIP CERAMIC 0.1MF
C1032	1-107-826-11	s	CAPACITOR,CHIP CERAMIC 0.1MF
C1033	1-125-889-11	s	CAPACITOR, C.CERAMIC 2.2MF
C1034	1-107-826-11	s	CAPACITOR,CHIP CERAMIC 0.1MF
C1035	1-127-692-11	s	CAP, CHIP CERAMIC 10MF B 3216
C1037	1-115-416-11	s	CAPACITOR,CERAMIC 1000PF/25V
C1038	1-162-970-11	s	CAPACITOR CERAMIC 0.01MF/25V B
C1064	1-131-603-11	s	CAP, POLYPYRROLE 100MF
C1065	1-127-708-11	s	CAP, POLYPYRROLE 100MF
C1066	1-127-708-11	s	CAP, POLYPYRROLE 100MF
C1067	1-127-692-11	s	CAP, CHIP CERAMIC 10MF B 3216
C1068	1-127-692-11	s	CAP, CHIP CERAMIC 10MF B 3216
C1069	1-127-692-11	s	CAP, CHIP CERAMIC 10MF B 3216
C1070	1-127-692-11	s	CAP, CHIP CERAMIC 10MF B 3216
C1071	1-127-692-11	s	CAP, CHIP CERAMIC 10MF B 3216
C1072	1-127-692-11	s	CAP, CHIP CERAMIC 10MF B 3216
C1073	1-107-826-11	s	CAPACITOR,CHIP CERAMIC 0.1MF
C1074	1-107-826-11	s	CAPACITOR,CHIP CERAMIC 0.1MF
C1075	1-107-826-11	s	CAPACITOR,CHIP CERAMIC 0.1MF
C1076	1-107-826-11	s	CAPACITOR,CHIP CERAMIC 0.1MF
C1100	1-107-826-11	s	CAPACITOR,CHIP CERAMIC 0.1MF
C1101	1-107-826-11	s	CAPACITOR,CHIP CERAMIC 0.1MF
C1103	1-107-826-11	s	CAPACITOR,CHIP CERAMIC 0.1MF
C1104	1-107-826-11	s	CAPACITOR,CHIP CERAMIC 0.1MF
C1105	1-107-826-11	s	CAPACITOR,CHIP CERAMIC 0.1MF
C1800	1-107-826-11	s	CAPACITOR,CHIP CERAMIC 0.1MF
C1801	1-107-826-11	s	CAPACITOR,CHIP CERAMIC 0.1MF
C1802	1-107-826-11	s	CAPACITOR,CHIP CERAMIC 0.1MF
C1803	1-107-826-11	s	CAPACITOR,CHIP CERAMIC 0.1MF
C1804	1-107-826-11	s	CAPACITOR,CHIP CERAMIC 0.1MF
C1805	1-107-826-11	s	CAPACITOR,CHIP CERAMIC 0.1MF
CN200	1-580-789-21	o	PIN,CONNECTOR (SMD) 6P
CN900	1-580-756-21	o	PIN, CONNECTOR 7P
D700	8-719-820-41	s	DIODE 1SS302
D1000	8-719-066-98	s	DIODE RB051L-40
D1001	8-719-938-75	s	DIODE SB05-05CP (RECTI)
D1002	8-719-938-75	s	DIODE SB05-05CP (RECTI)
D1003	8-719-066-98	s	DIODE RB051L-40
F1000	⚠ 1-576-270-11	s	FUSE CHIP 4A/125V (6125)
F1001 *2	⚠ 1-576-329-11	s	FUSE CHIP 10A/125V (6125)
*1	⚠ 1-576-270-11	s	FUSE CHIP 4A/125V (6125)
FB700	1-414-864-11	s	INDUCTOR, MICRO (CHIP TYPE)
FB702	1-414-864-11	s	INDUCTOR, MICRO (CHIP TYPE)
FB800	1-414-864-11	s	INDUCTOR, MICRO (CHIP TYPE)
FB801	1-414-864-11	s	INDUCTOR, MICRO (CHIP TYPE)
FB802	1-414-864-11	s	INDUCTOR, MICRO (CHIP TYPE)
FB803	1-414-864-11	s	INDUCTOR, MICRO (CHIP TYPE)
FB804	1-414-864-11	s	INDUCTOR, MICRO (CHIP TYPE)
FB805	1-414-864-11	s	INDUCTOR, MICRO (CHIP TYPE)
FB806	1-414-864-11	s	INDUCTOR, MICRO (CHIP TYPE)
FB807	1-414-864-11	s	INDUCTOR, MICRO (CHIP TYPE)

(HIF-1A BOARD [SUFFIX 22, 23] for HDW PLAYER)

Ref. No. or Q'ty	Part No.	SP	Description
FB808	1-414-864-11	s	INDUCTOR, MICRO (CHIP TYPE)
FB809	1-414-864-11	s	INDUCTOR, MICRO (CHIP TYPE)
FB810	1-414-864-11	s	INDUCTOR, MICRO (CHIP TYPE)
IC50	8-759-392-77	s	IC SN74LVC245APW (E20)
IC52	8-759-549-15	s	IC SN74LV245APWR
IC53	8-759-549-15	s	IC SN74LV245APWR
IC54	8-759-549-15	s	IC SN74LV245APWR
IC55	8-759-293-90	s	IC MSM514221B-30JS
IC56	8-759-392-77	s	IC SN74LVC245APW (E20)
IC58	6-802-270-01	s	IC EPC2LC20-HIF-IC58-V2.00
IC59	8-759-293-90	s	IC MSM514221B-30JS
IC60	8-759-293-90	s	IC MSM514221B-30JS
IC102	8-759-712-31	s	IC SN65LVDT388DBTR
IC103	8-759-712-31	s	IC SN65LVDT388DBTR
IC104	8-759-712-31	s	IC SN65LVDT388DBTR
IC110	6-700-804-01	s	IC SN74LVC574APWR
IC111	6-700-804-01	s	IC SN74LVC574APWR
IC112	6-700-804-01	s	IC SN74LVC574APWR
IC201	8-759-549-01	s	IC SN74LV125APWR
IC202	8-759-679-55	s	IC SN74LVC08APWR
IC203	8-759-662-39	s	IC 74VHCT245AMTCX
IC204	6-702-148-01	s	IC XC61CN2702NR
IC205	8-759-539-53	s	IC MB90096PF-G-139-BND(ER)
IC208	8-759-271-86	s	IC TC7SH04FU
IC209	8-759-669-44	s	IC SN74LVC74APWR-12
IC301	8-759-549-15	s	IC SN74LV245APWR
IC302	6-702-238-11	s	IC HY57V643220CT-7TR
IC303	6-702-238-11	s	IC HY57V643220CT-7TR
IC304	6-702-238-11	s	IC HY57V643220CT-7TR
IC305	6-702-238-11	s	IC HY57V643220CT-7TR
IC401	8-759-651-59	s	IC SN74CBTLV3245APWR
IC402	8-759-651-59	s	IC SN74CBTLV3245APWR
IC403	8-759-651-59	s	IC SN74CBTLV3245APWR
IC404	8-759-651-59	s	IC SN74CBTLV3245APWR
IC405	8-759-651-59	s	IC SN74CBTLV3245APWR
IC406	8-759-651-59	s	IC SN74CBTLV3245APWR
IC407	6-704-173-01	s	IC MS81V04160A-25TB
IC408	6-704-173-01	s	IC MS81V04160A-25TB
IC409	6-704-173-01	s	IC MS81V04160A-25TB
IC410	6-704-173-01	s	IC MS81V04160A-25TB
IC411	6-700-804-01	s	IC SN74LVC574APWR
IC412	6-700-804-01	s	IC SN74LVC574APWR
IC413	6-700-804-01	s	IC SN74LVC574APWR
IC414	6-700-804-01	s	IC SN74LVC574APWR
IC415	6-700-804-01	s	IC SN74LVC574APWR
IC416	6-700-804-01	s	IC SN74LVC574APWR
IC504	6-702-238-11	s	IC HY57V643220CT-7TR
IC505	6-702-238-11	s	IC HY57V643220CT-7TR
IC601	6-702-238-11	s	IC HY57V643220CT-7TR
IC602	8-759-392-77	s	IC SN74LVC245APW (E20)
IC603	8-759-392-77	s	IC SN74LVC245APW (E20)
IC604	8-759-392-77	s	IC SN74LVC245APW (E20)
IC605	8-759-196-96	s	IC TC7SH08FU (TE85R)
IC606	8-759-196-96	s	IC TC7SH08FU (TE85R)
IC701	8-759-392-77	s	IC SN74LVC245APW (E20)
IC703	8-759-598-13	s	IC CDC2510CPWR
IC704	8-759-694-36	s	IC SN74CBTLV3257PWR
IC705	8-759-639-85	s	IC SN65LVDS31DR

(HIF-1A BOARD [SUFFIX 22, 23] for HDW PLAYER)

Ref. No. or Q'ty	Part No.	SP	Description
IC707	8-759-392-77	s	IC SN74LVC245APW (E20)
IC708	8-759-392-77	s	IC SN74LVC245APW (E20)
IC709	8-759-196-96	s	IC TC7SH08FU (TE85R)
IC712 *2	deleted		
*1	8-759-598-13	s	IC CDC2510CPWR
IC713	8-759-598-13	s	IC CDC2510CPWR
IC716	8-759-675-47	s	IC SN74LVC04APWR
IC724	8-759-698-08	s	IC SN74CBTLV1G125DCKR
IC725	8-759-698-08	s	IC SN74CBTLV1G125DCKR
IC726	8-759-271-86	s	IC TC7SH04FU
IC730	8-759-675-47	s	IC SN74LVC04APWR
IC731	8-759-592-44	s	IC TC7SZ04FU(TE85R)
IC732	8-759-592-44	s	IC TC7SZ04FU(TE85R)
IC733 *2	6-703-875-01	s	IC CDCVF2505PWR
IC800	8-759-573-91	s	IC AD8055ART-REEL7
IC801	8-759-987-27	s	IC LM1881M
IC802	8-759-573-91	s	IC AD8055ART-REEL7
IC803	6-701-453-01	s	IC SN75207BNSR
IC804	8-759-196-96	s	IC TC7SH08FU (TE85R)
IC805	8-759-472-35	s	IC 74VHC221AMTCX
IC806	8-759-472-04	s	IC 74VHC74MTCX
IC807	8-759-472-35	s	IC 74VHC221AMTCX
IC808	8-759-678-15	s	IC TLV2231CDBVR
IC809	8-759-485-79	s	IC TC7SET08FU (TE85L)
IC810	8-759-678-15	s	IC TLV2231CDBVR
IC811	8-759-678-15	s	IC TLV2231CDBVR
IC812	8-759-678-15	s	IC TLV2231CDBVR
IC813	8-759-564-49	s	IC TC7W53FU-TE12R
IC814	8-759-564-49	s	IC TC7W53FU-TE12R
IC815	8-759-592-47	s	IC TC7SZ08FU(TE85R)
IC816	8-759-592-49	s	IC TC7SZ125FU(TE85R)
IC817	8-759-592-49	s	IC TC7SZ125FU(TE85R)
IC818	8-759-592-47	s	IC TC7SZ08FU(TE85R)
IC819	8-759-592-47	s	IC TC7SZ08FU(TE85R)
IC820	8-759-592-49	s	IC TC7SZ125FU(TE85R)
IC821	8-759-592-47	s	IC TC7SZ08FU(TE85R)
IC822	8-759-524-08	s	IC TC74VHC139FT(EL)
IC823	8-759-592-49	s	IC TC7SZ125FU(TE85R)
IC824	8-759-592-47	s	IC TC7SZ08FU(TE85R)
IC825	8-759-592-47	s	IC TC7SZ08FU(TE85R)
IC826	8-759-592-47	s	IC TC7SZ08FU(TE85R)
IC827	8-759-183-53	s	IC TL431CPK-E2
IC828	8-759-669-78	s	IC TLC2933IPWR-12
IC829	8-759-669-78	s	IC TLC2933IPWR-12
IC830	8-759-472-35	s	IC 74VHC221AMTCX
IC900	8-759-549-15	s	IC SN74LV245APWR
IC901	8-759-549-15	s	IC SN74LV245APWR
IC902	8-759-549-15	s	IC SN74LV245APWR
IC903	8-759-549-15	s	IC SN74LV245APWR
IC905	8-759-549-15	s	IC SN74LV245APWR
IC906	8-759-549-15	s	IC SN74LV245APWR
IC907	8-759-549-15	s	IC SN74LV245APWR
IC908	8-759-549-15	s	IC SN74LV245APWR
IC909	8-759-661-00	s	IC ISPLSI2192VE-100LT128
IC910	8-759-549-15	s	IC SN74LV245APWR
IC912	8-759-549-15	s	IC SN74LV245APWR
IC913	8-759-662-38	s	IC 74VHCT08AMTCX
IC914	8-759-471-96	s	IC 74VHC08MTCX
IC915	8-759-327-60	s	IC TC7W125FU-TE12R

(HIF-1A BOARD [SUFFIX 22, 23] for HDW PLAYER)

Ref. No. or Q'ty	Part No.	SP	Description
IC916	8-759-472-24	s	IC 74VHC157MTCX
IC919	8-759-271-86	s	IC TC7SH04FU
IC1000	8-759-543-08	s	IC LM2940CSX-5.0
IC1001	8-759-539-89	s	IC LM2990SX-5.0
IC1002	8-759-642-22	s	IC UPC29M05T-E2
IC1004	8-759-597-57	s	IC LTC1628CG#TR
IC1005	8-759-833-99	s	IC MC74HC4052ADTR2
IC1006	8-759-833-99	s	IC MC74HC4052ADTR2
IC1007	8-759-485-79	s	IC TC7SET08FU (TE85L)
IC1008	8-759-485-79	s	IC TC7SET08FU (TE85L)
IC1100	8-759-392-77	s	IC SN74LVC245APW (E20)
IC1101	8-759-392-77	s	IC SN74LVC245APW (E20)
IC1102	8-759-392-77	s	IC SN74LVC245APW (E20)
IC1104	8-759-472-24	s	IC 74VHC157MTCX
IC1105	8-759-472-24	s	IC 74VHC157MTCX
IS58	1-251-093-11	s	SOCKET,IC
L50	1-414-392-31	s	INDUCTOR (SMD) 1.0UH
L800	1-412-987-31	s	INDUCTOR (SMALL TYPE) 4.70UH
L1000	1-406-864-21	s	COIL,CHOKE 4.7UH
L1001	1-406-864-21	s	COIL,CHOKE 4.7UH
L1002	1-406-864-21	s	COIL,CHOKE 4.7UH
L1003	1-406-864-21	s	COIL,CHOKE 4.7UH
L1004	1-406-864-21	s	COIL,CHOKE 4.7UH
L1005	1-469-970-11	s	INDUCTOR, (SMD) 15UH
L1006	1-469-970-11	s	INDUCTOR, (SMD) 15UH
L1007	1-406-864-21	s	COIL,CHOKE 4.7UH
Q200	8-729-928-81	s	TRANSISTOR DTC144EE
Q201	8-729-928-54	s	TRANSISTOR DTA123JE
Q202	8-729-928-19	s	TRANSISTOR 2SA1774R
Q203	8-729-047-32	s	TRANSISTOR SI4425DY-T1
Q701	8-729-928-81	s	TRANSISTOR DTC144EE
Q704	8-729-928-19	s	TRANSISTOR 2SA1774R
Q800	8-729-928-19	s	TRANSISTOR 2SA1774R
Q801	8-729-927-99	s	TRANSISTOR 2SC4617R
Q802	8-729-143-07	s	TRANSISTOR 2SA1610-Y33
Q1000	8-729-047-85	s	TRANSISTOR SI4416DY-T1
Q1001	8-729-047-85	s	TRANSISTOR SI4416DY-T1
Q1002	8-729-047-85	s	TRANSISTOR SI4416DY-T1
Q1003	8-729-047-85	s	TRANSISTOR SI4416DY-T1
R50	1-218-871-11	s	RESISTOR,CHIP 10K 1/10W (1608)
R51	1-218-871-11	s	RESISTOR,CHIP 10K 1/10W (1608)
R52	1-218-871-11	s	RESISTOR,CHIP 10K 1/10W (1608)
R53	1-218-847-11	s	RESISTOR, CHIP 1K 1/10W (1608)
R54	1-218-847-11	s	RESISTOR, CHIP 1K 1/10W (1608)
R55	1-218-847-11	s	RESISTOR, CHIP 1K 1/10W (1608)
R57	1-218-847-11	s	RESISTOR, CHIP 1K 1/10W (1608)
R58	1-218-847-11	s	RESISTOR, CHIP 1K 1/10W (1608)
R59	1-218-847-11	s	RESISTOR, CHIP 1K 1/10W (1608)
R60	1-218-847-11	s	RESISTOR, CHIP 1K 1/10W (1608)
R61	1-218-847-11	s	RESISTOR, CHIP 1K 1/10W (1608)
R62	1-218-863-11	s	RESISTOR,CHIP 4.7K 1/10W(1608)
R63	1-218-863-11	s	RESISTOR,CHIP 4.7K 1/10W(1608)
R64	1-218-863-11	s	RESISTOR,CHIP 4.7K 1/10W(1608)
R65	1-218-863-11	s	RESISTOR,CHIP 4.7K 1/10W(1608)
R66 *2	1-218-895-11	s	RESISTOR,CHIP 100K 1/10W(1608)
*1	1-218-740-11	s	RESISTOR,CHIP 100K 1/16W(1608)
R68	1-216-864-11	s	CONDUCTOR, CHIP (1608)
R102	1-218-823-11	s	RESISTOR,CHIP 100 1/10W (1608)

(HIF-1A BOARD [SUFFIX 22, 23] for HDW PLAYER)

Ref. No. or Q'ty	Part No.	SP	Description
R103	1-218-823-11	s	RESISTOR,CHIP 100 1/10W (1608)
R104	1-218-823-11	s	RESISTOR,CHIP 100 1/10W (1608)
R105	1-218-823-11	s	RESISTOR,CHIP 100 1/10W (1608)
R106	1-218-823-11	s	RESISTOR,CHIP 100 1/10W (1608)
R107	1-218-823-11	s	RESISTOR,CHIP 100 1/10W (1608)
R108	1-218-823-11	s	RESISTOR,CHIP 100 1/10W (1608)
R109	1-218-823-11	s	RESISTOR,CHIP 100 1/10W (1608)
R110	1-218-823-11	s	RESISTOR,CHIP 100 1/10W (1608)
R111	1-218-823-11	s	RESISTOR,CHIP 100 1/10W (1608)
R112	1-218-823-11	s	RESISTOR,CHIP 100 1/10W (1608)
R113	1-218-823-11	s	RESISTOR,CHIP 100 1/10W (1608)
R114	1-218-823-11	s	RESISTOR,CHIP 100 1/10W (1608)
R115	1-218-823-11	s	RESISTOR,CHIP 100 1/10W (1608)
R116	1-218-823-11	s	RESISTOR,CHIP 100 1/10W (1608)
R117	1-218-823-11	s	RESISTOR,CHIP 100 1/10W (1608)
R118	1-218-823-11	s	RESISTOR,CHIP 100 1/10W (1608)
R119	1-218-823-11	s	RESISTOR,CHIP 100 1/10W (1608)
R120	1-218-823-11	s	RESISTOR,CHIP 100 1/10W (1608)
R121	1-218-823-11	s	RESISTOR,CHIP 100 1/10W (1608)
R122	1-218-823-11	s	RESISTOR,CHIP 100 1/10W (1608)
R123	1-218-823-11	s	RESISTOR,CHIP 100 1/10W (1608)
R124	1-218-823-11	s	RESISTOR,CHIP 100 1/10W (1608)
R125	1-211-985-11	s	RESISTOR,CHIP 47 1/10W (1608)
R207	1-211-985-11	s	RESISTOR,CHIP 47 1/10W (1608)
R208	1-211-985-11	s	RESISTOR,CHIP 47 1/10W (1608)
R209	1-211-985-11	s	RESISTOR,CHIP 47 1/10W (1608)
R210	1-211-985-11	s	RESISTOR,CHIP 47 1/10W (1608)
R211	1-211-985-11	s	RESISTOR,CHIP 47 1/10W (1608)
R212	1-211-985-11	s	RESISTOR,CHIP 47 1/10W (1608)
R213	1-211-985-11	s	RESISTOR,CHIP 47 1/10W (1608)
R214	1-211-985-11	s	RESISTOR,CHIP 47 1/10W (1608)
R215	1-211-985-11	s	RESISTOR,CHIP 47 1/10W (1608)
R216	1-211-985-11	s	RESISTOR,CHIP 47 1/10W (1608)
R217	1-211-985-11	s	RESISTOR,CHIP 47 1/10W (1608)
R218	1-211-985-11	s	RESISTOR,CHIP 47 1/10W (1608)
R219	1-211-985-11	s	RESISTOR,CHIP 47 1/10W (1608)
R220	1-211-985-11	s	RESISTOR,CHIP 47 1/10W (1608)
R221	1-211-985-11	s	RESISTOR,CHIP 47 1/10W (1608)
R222	1-211-985-11	s	RESISTOR,CHIP 47 1/10W (1608)
R223	1-211-985-11	s	RESISTOR,CHIP 47 1/10W (1608)
R224	1-211-985-11	s	RESISTOR,CHIP 47 1/10W (1608)
R225	1-211-985-11	s	RESISTOR,CHIP 47 1/10W (1608)
R226	1-211-985-11	s	RESISTOR,CHIP 47 1/10W (1608)
R227	1-211-985-11	s	RESISTOR,CHIP 47 1/10W (1608)
R228	1-211-985-11	s	RESISTOR,CHIP 47 1/10W (1608)
R229	1-211-985-11	s	RESISTOR,CHIP 47 1/10W (1608)
R230	1-211-985-11	s	RESISTOR,CHIP 47 1/10W (1608)
R231	1-211-985-11	s	RESISTOR,CHIP 47 1/10W (1608)
R232	1-211-985-11	s	RESISTOR,CHIP 47 1/10W (1608)
R233	1-211-985-11	s	RESISTOR,CHIP 47 1/10W (1608)
R234	1-211-985-11	s	RESISTOR,CHIP 47 1/10W (1608)
R235	1-211-985-11	s	RESISTOR,CHIP 47 1/10W (1608)
R236	1-211-985-11	s	RESISTOR,CHIP 47 1/10W (1608)
R237	1-211-985-11	s	RESISTOR,CHIP 47 1/10W (1608)
R238	1-211-985-11	s	RESISTOR,CHIP 47 1/10W (1608)
R239	1-211-985-11	s	RESISTOR,CHIP 47 1/10W (1608)
R240	1-211-985-11	s	RESISTOR,CHIP 47 1/10W (1608)
R241	1-211-985-11	s	RESISTOR,CHIP 47 1/10W (1608)
R242	1-211-985-11	s	RESISTOR,CHIP 47 1/10W (1608)

(HIF-1A BOARD [SUFFIX 22, 23] for HDW PLAYER)

Ref. No. or Q'ty	Part No.	SP	Description
R243	1-211-985-11	s	RESISTOR,CHIP 47 1/10W (1608)
R244	1-211-985-11	s	RESISTOR,CHIP 47 1/10W (1608)
R245	1-211-985-11	s	RESISTOR,CHIP 47 1/10W (1608)
R246	1-211-985-11	s	RESISTOR,CHIP 47 1/10W (1608)
R247	1-211-985-11	s	RESISTOR,CHIP 47 1/10W (1608)
R248	1-211-985-11	s	RESISTOR,CHIP 47 1/10W (1608)
R249	1-211-985-11	s	RESISTOR,CHIP 47 1/10W (1608)
R250	1-211-985-11	s	RESISTOR,CHIP 47 1/10W (1608)
R252	1-218-871-11	s	RESISTOR,CHIP 10K 1/10W (1608)
R253	1-211-985-11	s	RESISTOR,CHIP 47 1/10W (1608)
R254	1-218-835-11	s	RESISTOR,CHIP 330 1/10W (1608)
R255	1-218-847-11	s	RESISTOR, CHIP 1K 1/10W (1608)
R256	1-218-847-11	s	RESISTOR, CHIP 1K 1/10W (1608)
R257	1-218-871-11	s	RESISTOR,CHIP 10K 1/10W (1608)
R258	1-211-985-11	s	RESISTOR,CHIP 47 1/10W (1608)
R259	1-211-985-11	s	RESISTOR,CHIP 47 1/10W (1608)
R260	1-211-985-11	s	RESISTOR,CHIP 47 1/10W (1608)
R261	1-211-985-11	s	RESISTOR,CHIP 47 1/10W (1608)
R262	1-211-985-11	s	RESISTOR,CHIP 47 1/10W (1608)
R263	1-218-847-11	s	RESISTOR, CHIP 1K 1/10W (1608)
R264	1-218-847-11	s	RESISTOR, CHIP 1K 1/10W (1608)
R265	1-218-835-11	s	RESISTOR,CHIP 330 1/10W (1608)
R266	1-218-835-11	s	RESISTOR,CHIP 330 1/10W (1608)
R267	1-218-835-11	s	RESISTOR,CHIP 330 1/10W (1608)
R268	1-218-863-11	s	RESISTOR,CHIP 4.7K 1/10W(1608)
R269	1-211-985-11	s	RESISTOR,CHIP 47 1/10W (1608)
R273	1-216-864-11	s	CONDUCTOR, CHIP (1608)
R300	1-218-883-11	s	RESISTOR,CHIP 33K 1/10W (1608)
R301	1-218-847-11	s	RESISTOR, CHIP 1K 1/10W (1608)
R302	1-211-985-11	s	RESISTOR,CHIP 47 1/10W (1608)
R303	1-211-985-11	s	RESISTOR,CHIP 47 1/10W (1608)
R310	1-216-864-11	s	CONDUCTOR, CHIP (1608)
R313	1-216-864-11	s	CONDUCTOR, CHIP (1608)
R400	1-211-977-11	s	RESISTOR,CHIP 22 1/10W (1608)
R401	1-211-977-11	s	RESISTOR,CHIP 22 1/10W (1608)
R402	1-211-977-11	s	RESISTOR,CHIP 22 1/10W (1608)
R403	1-211-977-11	s	RESISTOR,CHIP 22 1/10W (1608)
R404	1-211-985-11	s	RESISTOR,CHIP 47 1/10W (1608)
R405	1-211-985-11	s	RESISTOR,CHIP 47 1/10W (1608)
R406	1-211-985-11	s	RESISTOR,CHIP 47 1/10W (1608)
R407	1-211-985-11	s	RESISTOR,CHIP 47 1/10W (1608)
R408	1-211-985-11	s	RESISTOR,CHIP 47 1/10W (1608)
R409	1-211-985-11	s	RESISTOR,CHIP 47 1/10W (1608)
R418	1-211-985-11	s	RESISTOR,CHIP 47 1/10W (1608)
R419	1-211-985-11	s	RESISTOR,CHIP 47 1/10W (1608)
R500	1-216-864-11	s	CONDUCTOR, CHIP (1608)
R503	1-216-864-11	s	CONDUCTOR, CHIP (1608)
R504	1-216-864-11	s	CONDUCTOR, CHIP (1608)
R600	1-218-871-11	s	RESISTOR,CHIP 10K 1/10W (1608)
R601	1-218-871-11	s	RESISTOR,CHIP 10K 1/10W (1608)
R602	1-218-871-11	s	RESISTOR,CHIP 10K 1/10W (1608)
R603	1-218-871-11	s	RESISTOR,CHIP 10K 1/10W (1608)
R604	1-218-871-11	s	RESISTOR,CHIP 10K 1/10W (1608)
R605	1-218-871-11	s	RESISTOR,CHIP 10K 1/10W (1608)
R606	1-218-871-11	s	RESISTOR,CHIP 10K 1/10W (1608)
R607	1-218-871-11	s	RESISTOR,CHIP 10K 1/10W (1608)
R608	1-218-871-11	s	RESISTOR,CHIP 10K 1/10W (1608)
R609	1-218-871-11	s	RESISTOR,CHIP 10K 1/10W (1608)
R610	1-218-871-11	s	RESISTOR,CHIP 10K 1/10W (1608)

(HIF-1A BOARD [SUFFIX 22, 23] for HDW PLAYER)

Ref. No. or Q'ty	Part No.	SP	Description
R611	1-218-871-11	s	RESISTOR,CHIP 10K 1/10W (1608)
R612	1-218-871-11	s	RESISTOR,CHIP 10K 1/10W (1608)
R613	1-218-871-11	s	RESISTOR,CHIP 10K 1/10W (1608)
R614	1-218-871-11	s	RESISTOR,CHIP 10K 1/10W (1608)
R615	1-218-871-11	s	RESISTOR,CHIP 10K 1/10W (1608)
R616	1-218-871-11	s	RESISTOR,CHIP 10K 1/10W (1608)
R617	1-218-871-11	s	RESISTOR,CHIP 10K 1/10W (1608)
R618	1-218-871-11	s	RESISTOR,CHIP 10K 1/10W (1608)
R619	1-218-871-11	s	RESISTOR,CHIP 10K 1/10W (1608)
R620	1-211-985-11	s	RESISTOR,CHIP 47 1/10W (1608)
R621	1-211-985-11	s	RESISTOR,CHIP 47 1/10W (1608)
R622	1-211-985-11	s	RESISTOR,CHIP 47 1/10W (1608)
R623	1-211-985-11	s	RESISTOR,CHIP 47 1/10W (1608)
R624	1-211-985-11	s	RESISTOR,CHIP 47 1/10W (1608)
R625	1-211-985-11	s	RESISTOR,CHIP 47 1/10W (1608)
R626	1-211-985-11	s	RESISTOR,CHIP 47 1/10W (1608)
R627	1-218-831-11	s	RESISTOR, CHIP 220 1/10W(1608)
R628	1-218-831-11	s	RESISTOR, CHIP 220 1/10W(1608)
R704	1-218-831-11	s	RESISTOR, CHIP 220 1/10W(1608)
R705	1-218-831-11	s	RESISTOR, CHIP 220 1/10W(1608)
R706	1-218-851-11	s	RESISTOR,CHIP 1.5K 1/10W(1608)
R707	1-218-847-11	s	RESISTOR, CHIP 1K 1/10W (1608)
R708	1-218-863-11	s	RESISTOR,CHIP 4.7K 1/10W(1608)
R709	1-218-863-11	s	RESISTOR,CHIP 4.7K 1/10W(1608)
R710	1-218-863-11	s	RESISTOR,CHIP 4.7K 1/10W(1608)
R711	1-211-985-11	s	RESISTOR,CHIP 47 1/10W (1608)
R712	1-211-985-11	s	RESISTOR,CHIP 47 1/10W (1608)
R713	1-211-985-11	s	RESISTOR,CHIP 47 1/10W (1608)
R714	1-211-985-11	s	RESISTOR,CHIP 47 1/10W (1608)
R716	1-216-864-11	s	CONDUCTOR, CHIP (1608)
R717	1-216-864-11	s	CONDUCTOR, CHIP (1608)
R718	1-216-864-11	s	CONDUCTOR, CHIP (1608)
R719	1-218-863-11	s	RESISTOR,CHIP 4.7K 1/10W(1608)
R720	1-216-864-11	s	CONDUCTOR, CHIP (1608)
R721	1-216-864-11	s	CONDUCTOR, CHIP (1608)
R722	1-216-864-11	s	CONDUCTOR, CHIP (1608)
R723	1-216-864-11	s	CONDUCTOR, CHIP (1608)
R724	1-216-864-11	s	CONDUCTOR, CHIP (1608)
R725	1-216-864-11	s	CONDUCTOR, CHIP (1608)
R726	1-216-864-11	s	CONDUCTOR, CHIP (1608)
R727	1-216-864-11	s	CONDUCTOR, CHIP (1608)
R728	1-216-864-11	s	CONDUCTOR, CHIP (1608)
R729	1-218-857-11	s	RESISTOR,CHIP 2.7K 1/10W(1608)
R733	1-211-985-11	s	RESISTOR,CHIP 47 1/10W (1608)
R734	1-211-985-11	s	RESISTOR,CHIP 47 1/10W (1608)
R735	1-211-985-11	s	RESISTOR,CHIP 47 1/10W (1608)
R736	1-211-985-11	s	RESISTOR,CHIP 47 1/10W (1608)
R737	1-211-985-11	s	RESISTOR,CHIP 47 1/10W (1608)
R738	1-211-985-11	s	RESISTOR,CHIP 47 1/10W (1608)
R739	1-211-985-11	s	RESISTOR,CHIP 47 1/10W (1608)
R740	1-211-985-11	s	RESISTOR,CHIP 47 1/10W (1608)
R743	1-211-985-11	s	RESISTOR,CHIP 47 1/10W (1608)
R744	1-211-985-11	s	RESISTOR,CHIP 47 1/10W (1608)
R745	1-211-985-11	s	RESISTOR,CHIP 47 1/10W (1608)
R746	1-211-985-11	s	RESISTOR,CHIP 47 1/10W (1608)
R747	1-211-985-11	s	RESISTOR,CHIP 47 1/10W (1608)
R750	1-211-985-11	s	RESISTOR,CHIP 47 1/10W (1608)
R753	1-211-985-11	s	RESISTOR,CHIP 47 1/10W (1608)
R754	1-211-985-11	s	RESISTOR,CHIP 47 1/10W (1608)

(HIF-1A BOARD [SUFFIX 22, 23] for HDW PLAYER)

Ref. No. or Q'ty	Part No.	SP	Description
R755	1-211-985-11	s	RESISTOR,CHIP 47 1/10W (1608)
R756	1-218-847-11	s	RESISTOR, CHIP 1K 1/10W (1608)
R757	1-218-847-11	s	RESISTOR, CHIP 1K 1/10W (1608)
R758	1-218-847-11	s	RESISTOR, CHIP 1K 1/10W (1608)
R759	1-211-977-11	s	RESISTOR,CHIP 22 1/10W (1608)
R760	1-211-977-11	s	RESISTOR,CHIP 22 1/10W (1608)
R761	1-211-977-11	s	RESISTOR,CHIP 22 1/10W (1608)
R762	1-211-977-11	s	RESISTOR,CHIP 22 1/10W (1608)
R763	1-211-977-11	s	RESISTOR,CHIP 22 1/10W (1608)
R764	1-211-977-11	s	RESISTOR,CHIP 22 1/10W (1608)
R765	1-211-977-11	s	RESISTOR,CHIP 22 1/10W (1608)
R766	1-211-977-11	s	RESISTOR,CHIP 22 1/10W (1608)
R767	1-211-977-11	s	RESISTOR,CHIP 22 1/10W (1608)
R768	1-211-977-11	s	RESISTOR,CHIP 22 1/10W (1608)
R770	1-218-895-11	s	RESISTOR,CHIP 100K 1/10W(1608)
R771	1-218-847-11	s	RESISTOR, CHIP 1K 1/10W (1608)
R772	1-218-871-11	s	RESISTOR,CHIP 10K 1/10W (1608)
R773	1-211-985-11	s	RESISTOR,CHIP 47 1/10W (1608)
R774	1-211-985-11	s	RESISTOR,CHIP 47 1/10W (1608)
R781	1-218-863-11	s	RESISTOR,CHIP 4.7K 1/10W(1608)
R782	1-216-864-11	s	CONDUCTOR, CHIP (1608)
R786	*2 deleted		
	*1 1-218-847-11	s	RESISTOR, CHIP 1K 1/10W (1608)
R787	*2 deleted		
	*1 1-218-847-11	s	RESISTOR, CHIP 1K 1/10W (1608)
R788	1-218-847-11	s	RESISTOR, CHIP 1K 1/10W (1608)
R789	1-218-847-11	s	RESISTOR, CHIP 1K 1/10W (1608)
R790	1-218-831-11	s	RESISTOR, CHIP 220 1/10W(1608)
R792	*2 deleted		
	*1 1-211-977-11	s	RESISTOR,CHIP 22 1/10W (1608)
R793	1-211-977-11	s	RESISTOR,CHIP 22 1/10W (1608)
R795	*2 deleted		
	*1 1-218-863-11	s	RESISTOR,CHIP 4.7K 1/10W(1608)
R796	1-218-863-11	s	RESISTOR,CHIP 4.7K 1/10W(1608)
R800	1-218-847-11	s	RESISTOR, CHIP 1K 1/10W (1608)
R801	1-218-847-11	s	RESISTOR, CHIP 1K 1/10W (1608)
R802	1-216-864-11	s	CONDUCTOR, CHIP (1608)
R803	1-216-864-11	s	CONDUCTOR, CHIP (1608)
R804	1-216-864-11	s	CONDUCTOR, CHIP (1608)
R805	1-218-847-11	s	RESISTOR, CHIP 1K 1/10W (1608)
R806	1-218-847-11	s	RESISTOR, CHIP 1K 1/10W (1608)
R807	1-218-847-11	s	RESISTOR, CHIP 1K 1/10W (1608)
R808	1-218-847-11	s	RESISTOR, CHIP 1K 1/10W (1608)
R809	1-218-847-11	s	RESISTOR, CHIP 1K 1/10W (1608)
R810	1-218-847-11	s	RESISTOR, CHIP 1K 1/10W (1608)
R811	1-211-985-11	s	RESISTOR,CHIP 47 1/10W (1608)
R812	1-218-847-11	s	RESISTOR, CHIP 1K 1/10W (1608)
R813	1-211-977-11	s	RESISTOR,CHIP 22 1/10W (1608)
R814	1-218-839-11	s	RESISTOR,CHIP 470 1/10W (1608)
R815	1-218-839-11	s	RESISTOR,CHIP 470 1/10W (1608)
R816	1-218-847-11	s	RESISTOR, CHIP 1K 1/10W (1608)
R817	1-218-832-11	s	RESISTOR,CHIP 240 1/10W (1608)
R818	1-218-856-11	s	RESISTOR,CHIP 2.4K 1/10W(1608)
R819	1-218-847-11	s	RESISTOR, CHIP 1K 1/10W (1608)
R820	1-218-827-11	s	RESISTOR,CHIP 150 1/10W (1608)
R821	1-218-827-11	s	RESISTOR,CHIP 150 1/10W (1608)
R824	1-218-879-11	s	RESISTOR,CHIP 22K 1/10W (1608)
R825	1-218-855-11	s	RESISTOR,CHIP 2.2K 1/10W(1608)
R826	1-218-865-11	s	RESISTOR,CHIP 5.6K 1/10W(1608)

(HIF-1A BOARD [SUFFIX 22, 23] for HDW PLAYER)

Ref. No. or Q'ty	Part No.	SP	Description
R827	1-218-871-11	s	RESISTOR,CHIP 10K 1/10W (1608)
R828	1-216-863-11	s	RESISTOR,CHIP 3.3M 1/16W 1608
R829	1-218-827-11	s	RESISTOR,CHIP 150 1/10W (1608)
R830	1-218-827-11	s	RESISTOR,CHIP 150 1/10W (1608)
R831	1-218-855-11	s	RESISTOR,CHIP 2.2K 1/10W(1608)
R832	1-218-847-11	s	RESISTOR, CHIP 1K 1/10W (1608)
R833	1-218-847-11	s	RESISTOR, CHIP 1K 1/10W (1608)
R834	1-218-823-11	s	RESISTOR,CHIP 100 1/10W (1608)
R835	1-218-859-11	s	RESISTOR,CHIP 3.3K 1/10W(1608)
R836	1-218-823-11	s	RESISTOR,CHIP 100 1/10W (1608)
R837	1-218-855-11	s	RESISTOR,CHIP 2.2K 1/10W(1608)
R838	1-218-823-11	s	RESISTOR,CHIP 100 1/10W (1608)
R839	1-218-863-11	s	RESISTOR,CHIP 4.7K 1/10W(1608)
R840	1-218-858-11	s	RESISTOR, CHIP 3K 1/10W (1608)
R841	1-218-847-11	s	RESISTOR, CHIP 1K 1/10W (1608)
R842	1-218-847-11	s	RESISTOR, CHIP 1K 1/10W (1608)
R843	1-218-847-11	s	RESISTOR, CHIP 1K 1/10W (1608)
R844	1-218-847-11	s	RESISTOR, CHIP 1K 1/10W (1608)
R845	1-216-864-11	s	CONDUCTOR, CHIP (1608)
R847	1-218-895-11	s	RESISTOR,CHIP 100K 1/10W(1608)
R848	1-218-895-11	s	RESISTOR,CHIP 100K 1/10W(1608)
R849	1-218-895-11	s	RESISTOR,CHIP 100K 1/10W(1608)
R850	1-218-871-11	s	RESISTOR,CHIP 10K 1/10W (1608)
R851	1-218-871-11	s	RESISTOR,CHIP 10K 1/10W (1608)
R852	1-218-871-11	s	RESISTOR,CHIP 10K 1/10W (1608)
R853	1-218-903-11	s	RESISTOR,CHIP 220K 1/10W(1608)
R854	1-218-871-11	s	RESISTOR,CHIP 10K 1/10W (1608)
R855	1-218-871-11	s	RESISTOR,CHIP 10K 1/10W (1608)
R857	1-218-871-11	s	RESISTOR,CHIP 10K 1/10W (1608)
R858	1-218-871-11	s	RESISTOR,CHIP 10K 1/10W (1608)
R859	1-218-831-11	s	RESISTOR, CHIP 220 1/10W(1608)
R860	1-218-839-11	s	RESISTOR,CHIP 470 1/10W (1608)
R861	1-218-839-11	s	RESISTOR,CHIP 470 1/10W (1608)
R862	1-211-985-11	s	RESISTOR,CHIP 47 1/10W (1608)
R863	1-211-985-11	s	RESISTOR,CHIP 47 1/10W (1608)
R864	1-211-985-11	s	RESISTOR,CHIP 47 1/10W (1608)
R865	1-211-985-11	s	RESISTOR,CHIP 47 1/10W (1608)
R866	1-211-985-11	s	RESISTOR,CHIP 47 1/10W (1608)
R867	1-211-985-11	s	RESISTOR,CHIP 47 1/10W (1608)
R868	1-211-985-11	s	RESISTOR,CHIP 47 1/10W (1608)
R869	1-211-985-11	s	RESISTOR,CHIP 47 1/10W (1608)
R900	1-218-895-11	s	RESISTOR,CHIP 100K 1/10W(1608)
R901	1-218-823-11	s	RESISTOR,CHIP 100 1/10W (1608)
R902	1-216-864-11	s	CONDUCTOR, CHIP (1608)
R904	1-216-864-11	s	CONDUCTOR, CHIP (1608)
R905	1-216-864-11	s	CONDUCTOR, CHIP (1608)
R906	1-216-864-11	s	CONDUCTOR, CHIP (1608)
R907	1-216-864-11	s	CONDUCTOR, CHIP (1608)
R908	1-218-863-11	s	RESISTOR,CHIP 4.7K 1/10W(1608)
R909	1-218-863-11	s	RESISTOR,CHIP 4.7K 1/10W(1608)
R910	1-218-895-11	s	RESISTOR,CHIP 100K 1/10W(1608)
R911	1-218-895-11	s	RESISTOR,CHIP 100K 1/10W(1608)
R912	1-218-895-11	s	RESISTOR,CHIP 100K 1/10W(1608)
R913	1-211-985-11	s	RESISTOR,CHIP 47 1/10W (1608)
R915	1-218-895-11	s	RESISTOR,CHIP 100K 1/10W(1608)
R916	1-218-895-11	s	RESISTOR,CHIP 100K 1/10W(1608)
R917	1-211-985-11	s	RESISTOR,CHIP 47 1/10W (1608)
R918	1-211-985-11	s	RESISTOR,CHIP 47 1/10W (1608)
R921	*2 1-216-864-11	s	CONDUCTOR, CHIP (1608)

(HIF-1A BOARD [SUFFIX 22, 23] for HDW PLAYER)

Ref. No. or Q'ty	Part No.	SP	Description
R924	1-216-864-11	s	CONDUCTOR, CHIP (1608)
R925	1-216-864-11	s	CONDUCTOR, CHIP (1608)
R926	1-216-864-11	s	CONDUCTOR, CHIP (1608)
R927	1-218-895-11	s	RESISTOR,CHIP 100K 1/10W(1608)
R928	1-211-985-11	s	RESISTOR,CHIP 47 1/10W (1608)
R930	1-218-863-11	s	RESISTOR,CHIP 4.7K 1/10W(1608)
R931	1-218-863-11	s	RESISTOR,CHIP 4.7K 1/10W(1608)
R932	1-218-895-11	s	RESISTOR,CHIP 100K 1/10W(1608)
R933	1-218-895-11	s	RESISTOR,CHIP 100K 1/10W(1608)
R934	1-216-864-11	s	CONDUCTOR, CHIP (1608)
R936	1-211-985-11	s	RESISTOR,CHIP 47 1/10W (1608)
R940	1-216-864-11	s	CONDUCTOR, CHIP (1608)
R942	1-211-985-11	s	RESISTOR,CHIP 47 1/10W (1608)
R943	1-211-985-11	s	RESISTOR,CHIP 47 1/10W (1608)
R944	1-218-895-11	s	RESISTOR,CHIP 100K 1/10W(1608)
R945	1-211-985-11	s	RESISTOR,CHIP 47 1/10W (1608)
R946	1-211-985-11	s	RESISTOR,CHIP 47 1/10W (1608)
R947	1-211-985-11	s	RESISTOR,CHIP 47 1/10W (1608)
R948	1-211-985-11	s	RESISTOR,CHIP 47 1/10W (1608)
R949	1-211-985-11	s	RESISTOR,CHIP 47 1/10W (1608)
R950	1-211-985-11	s	RESISTOR,CHIP 47 1/10W (1608)
R951	1-211-985-11	s	RESISTOR,CHIP 47 1/10W (1608)
R952	1-211-985-11	s	RESISTOR,CHIP 47 1/10W (1608)
R953	1-218-823-11	s	RESISTOR,CHIP 100 1/10W (1608)
R954	1-218-823-11	s	RESISTOR,CHIP 100 1/10W (1608)
R955	1-211-985-11	s	RESISTOR,CHIP 47 1/10W (1608)
R956	1-211-985-11	s	RESISTOR,CHIP 47 1/10W (1608)
R957	1-211-985-11	s	RESISTOR,CHIP 47 1/10W (1608)
R958	1-211-985-11	s	RESISTOR,CHIP 47 1/10W (1608)
R959	1-211-985-11	s	RESISTOR,CHIP 47 1/10W (1608)
R960	1-211-985-11	s	RESISTOR,CHIP 47 1/10W (1608)
R961	1-211-985-11	s	RESISTOR,CHIP 47 1/10W (1608)
R962	1-211-985-11	s	RESISTOR,CHIP 47 1/10W (1608)
R963	1-211-985-11	s	RESISTOR,CHIP 47 1/10W (1608)
R964	1-211-985-11	s	RESISTOR,CHIP 47 1/10W (1608)
R965	1-211-985-11	s	RESISTOR,CHIP 47 1/10W (1608)
R1000	1-219-610-11	s	RESISTOR, (SQUARE TYPE) 0.022
R1003	1-211-969-11	s	RESISTOR,CHIP 10 1/10W (1608)
R1004	1-211-969-11	s	RESISTOR,CHIP 10 1/10W (1608)
R1005	1-218-880-11	s	RESISTOR,CHIP 24K 1/10W (1608)
R1006	1-218-877-11	s	RESISTOR,CHIP 18K 1/10W (1608)
R1009	1-218-863-11	s	RESISTOR,CHIP 4.7K 1/10W(1608)
R1016	1-218-823-11	s	RESISTOR,CHIP 100 1/10W (1608)
R1021	1-218-863-11	s	RESISTOR,CHIP 4.7K 1/10W(1608)
R1022 *2	1-218-871-11	s	RESISTOR,CHIP 10K 1/10W (1608)
*1	1-218-870-11	s	RESISTOR,CHIP 9.1K 1/10W(1608)
R1023	1-218-871-11	s	RESISTOR,CHIP 10K 1/10W (1608)
R1026	1-211-969-11	s	RESISTOR,CHIP 10 1/10W (1608)
R1027	1-211-969-11	s	RESISTOR,CHIP 10 1/10W (1608)
R1028	1-219-610-11	s	RESISTOR, (SQUARE TYPE) 0.022
R1029	1-216-864-11	s	CONDUCTOR, CHIP (1608)
R1705 *2	deleted		
*1	1-211-977-11	s	RESISTOR,CHIP 22 1/10W (1608)
R1708	1-211-977-11	s	RESISTOR,CHIP 22 1/10W (1608)
R1709	1-211-977-11	s	RESISTOR,CHIP 22 1/10W (1608)
R1710	1-211-977-11	s	RESISTOR,CHIP 22 1/10W (1608)
R1711	1-211-977-11	s	RESISTOR,CHIP 22 1/10W (1608)
R1712	1-211-977-11	s	RESISTOR,CHIP 22 1/10W (1608)
R1713	1-211-977-11	s	RESISTOR,CHIP 22 1/10W (1608)

(HIF-1A BOARD [SUFFIX 22, 23] for HDW PLAYER)

Ref. No. or Q'ty	Part No.	SP	Description
R1714	1-211-977-11	s	RESISTOR,CHIP 22 1/10W (1608)
R1715	1-211-977-11	s	RESISTOR,CHIP 22 1/10W (1608)
R1716	1-211-977-11	s	RESISTOR,CHIP 22 1/10W (1608)
R1717	1-211-977-11	s	RESISTOR,CHIP 22 1/10W (1608)
R1718	1-211-985-11	s	RESISTOR,CHIP 47 1/10W (1608)
R1719 *2	1-211-985-11	s	RESISTOR,CHIP 47 1/10W (1608)
R1720	1-211-985-11	s	RESISTOR,CHIP 47 1/10W (1608)
R1721	1-211-985-11	s	RESISTOR,CHIP 47 1/10W (1608)
R1722	1-211-985-11	s	RESISTOR,CHIP 47 1/10W (1608)
R1723	1-211-985-11	s	RESISTOR,CHIP 47 1/10W (1608)
R1729	1-211-977-11	s	RESISTOR,CHIP 22 1/10W (1608)
R1738	1-218-831-11	s	RESISTOR, CHIP 220 1/10W(1608)
R1739 *2	deleted		
*1	1-216-864-11	s	CONDUCTOR, CHIP (1608)
R1740 *2	1-216-864-11	s	CONDUCTOR, CHIP (1608)
RB50	1-233-412-11	s	RESISTOR,CHIP NETWORK 1K
RB51	1-233-412-11	s	RESISTOR,CHIP NETWORK 1K
RB52	1-239-409-11	s	RESISTOR NETWORK 47 (1608)
RB53	1-239-409-11	s	RESISTOR NETWORK 47 (1608)
RB113	1-239-409-11	s	RESISTOR NETWORK 47 (1608)
RB114	1-239-409-11	s	RESISTOR NETWORK 47 (1608)
RB115	1-239-409-11	s	RESISTOR NETWORK 47 (1608)
RB116	1-239-409-11	s	RESISTOR NETWORK 47 (1608)
RB117	1-239-409-11	s	RESISTOR NETWORK 47 (1608)
RB118	1-239-409-11	s	RESISTOR NETWORK 47 (1608)
RB119	1-233-411-11	s	RESISTOR,CHIP NETWORK 220/3216
RB120	1-233-411-11	s	RESISTOR,CHIP NETWORK 220/3216
RB121	1-233-411-11	s	RESISTOR,CHIP NETWORK 220/3216
RB122	1-233-411-11	s	RESISTOR,CHIP NETWORK 220/3216
RB123	1-233-411-11	s	RESISTOR,CHIP NETWORK 220/3216
RB124	1-233-411-11	s	RESISTOR,CHIP NETWORK 220/3216
RB125	1-239-409-11	s	RESISTOR NETWORK 47 (1608)
RB126	1-239-409-11	s	RESISTOR NETWORK 47 (1608)
RB127	1-239-409-11	s	RESISTOR NETWORK 47 (1608)
RB128	1-239-409-11	s	RESISTOR NETWORK 47 (1608)
RB129	1-239-409-11	s	RESISTOR NETWORK 47 (1608)
RB130	1-239-409-11	s	RESISTOR NETWORK 47 (1608)
RB204	1-239-409-11	s	RESISTOR NETWORK 47 (1608)
RB205	1-239-409-11	s	RESISTOR NETWORK 47 (1608)
RB206	1-239-409-11	s	RESISTOR NETWORK 47 (1608)
RB207	1-239-409-11	s	RESISTOR NETWORK 47 (1608)
RB208	1-239-409-11	s	RESISTOR NETWORK 47 (1608)
RB209	1-239-409-11	s	RESISTOR NETWORK 47 (1608)
RB210	1-239-409-11	s	RESISTOR NETWORK 47 (1608)
RB211	1-239-409-11	s	RESISTOR NETWORK 47 (1608)
RB212	1-239-409-11	s	RESISTOR NETWORK 47 (1608)
RB213	1-239-409-11	s	RESISTOR NETWORK 47 (1608)
RB214	1-239-409-11	s	RESISTOR NETWORK 47 (1608)
RB215	1-239-409-11	s	RESISTOR NETWORK 47 (1608)
RB216	1-239-409-11	s	RESISTOR NETWORK 47 (1608)
RB217	1-239-409-11	s	RESISTOR NETWORK 47 (1608)
RB218	1-239-409-11	s	RESISTOR NETWORK 47 (1608)
RB219	1-239-409-11	s	RESISTOR NETWORK 47 (1608)
RB220	1-239-409-11	s	RESISTOR NETWORK 47 (1608)
RB221	1-239-409-11	s	RESISTOR NETWORK 47 (1608)
RB222	1-239-409-11	s	RESISTOR NETWORK 47 (1608)
RB223	1-239-409-11	s	RESISTOR NETWORK 47 (1608)
RB224	1-236-908-11	s	RESISTOR,NETWORK 10K (3216)
RB300	1-239-409-11	s	RESISTOR NETWORK 47 (1608)

(HIF-1A BOARD [SUFFIX 22, 23] for HDW PLAYER)

Ref. No. or Q'ty	Part No.	SP	Description
RB301	1-239-409-11	s	RESISTOR NETWORK 47 (1608)
RB302	1-239-409-11	s	RESISTOR NETWORK 47 (1608)
RB303	1-239-409-11	s	RESISTOR NETWORK 47 (1608)
RB304	1-239-409-11	s	RESISTOR NETWORK 47 (1608)
RB309	1-239-409-11	s	RESISTOR NETWORK 47 (1608)
RB400	1-233-575-11	s	RES, CHIP NETWORK 22
RB401	1-233-575-11	s	RES, CHIP NETWORK 22
RB402	1-233-575-11	s	RES, CHIP NETWORK 22
RB403	1-233-575-11	s	RES, CHIP NETWORK 22
RB404	1-233-575-11	s	RES, CHIP NETWORK 22
RB410	1-233-575-11	s	RES, CHIP NETWORK 22
RB411	1-233-575-11	s	RES, CHIP NETWORK 22
RB412	1-233-575-11	s	RES, CHIP NETWORK 22
RB413	1-233-575-11	s	RES, CHIP NETWORK 22
RB414	1-233-575-11	s	RES, CHIP NETWORK 22
RB415	1-239-409-11	s	RESISTOR NETWORK 47 (1608)
RB416	1-239-409-11	s	RESISTOR NETWORK 47 (1608)
RB417	1-239-409-11	s	RESISTOR NETWORK 47 (1608)
RB418	1-239-409-11	s	RESISTOR NETWORK 47 (1608)
RB419	1-239-409-11	s	RESISTOR NETWORK 47 (1608)
RB505	1-233-575-11	s	RES, CHIP NETWORK 22
RB506	1-233-575-11	s	RES, CHIP NETWORK 22
RB507	1-233-575-11	s	RES, CHIP NETWORK 22
RB508	1-233-575-11	s	RES, CHIP NETWORK 22
RB509	1-233-575-11	s	RES, CHIP NETWORK 22
RB510	1-233-575-11	s	RES, CHIP NETWORK 22
RB511	1-233-575-11	s	RES, CHIP NETWORK 22
RB512	1-233-575-11	s	RES, CHIP NETWORK 22
RB513	1-233-575-11	s	RES, CHIP NETWORK 22
RB514	1-233-575-11	s	RES, CHIP NETWORK 22
RB515	1-233-575-11	s	RES, CHIP NETWORK 22
RB516	1-233-575-11	s	RES, CHIP NETWORK 22
RB600	1-239-409-11	s	RESISTOR NETWORK 47 (1608)
RB601	1-239-409-11	s	RESISTOR NETWORK 47 (1608)
RB602	1-239-409-11	s	RESISTOR NETWORK 47 (1608)
RB603	1-239-409-11	s	RESISTOR NETWORK 47 (1608)
RB604	1-233-575-11	s	RES, CHIP NETWORK 22
RB605	1-233-575-11	s	RES, CHIP NETWORK 22
RB606	1-233-575-11	s	RES, CHIP NETWORK 22
RB607	1-233-575-11	s	RES, CHIP NETWORK 22
RB608	1-233-575-11	s	RES, CHIP NETWORK 22
RB609	1-233-575-11	s	RES, CHIP NETWORK 22
RB700	1-233-810-21	s	RES, NETWORK 100K (3216)
RB701	1-239-409-11	s	RESISTOR NETWORK 47 (1608)
RB702	1-239-409-11	s	RESISTOR NETWORK 47 (1608)
RB703	1-233-575-11	s	RES, CHIP NETWORK 22
RB704	1-233-575-11	s	RES, CHIP NETWORK 22
RB705	1-233-575-11	s	RES, CHIP NETWORK 22
RB706	1-233-575-11	s	RES, CHIP NETWORK 22
RB900	1-233-810-21	s	RES, NETWORK 100K (3216)
RB901	1-233-810-21	s	RES, NETWORK 100K (3216)
RB902	1-233-810-21	s	RES, NETWORK 100K (3216)
RB903	1-233-810-21	s	RES, NETWORK 100K (3216)
RB904	1-233-810-21	s	RES, NETWORK 100K (3216)
RB905	1-233-810-21	s	RES, NETWORK 100K (3216)
RB906	1-233-810-21	s	RES, NETWORK 100K (3216)
RB908	1-239-409-11	s	RESISTOR NETWORK 47 (1608)
RB909	1-239-409-11	s	RESISTOR NETWORK 47 (1608)
RB910	1-239-409-11	s	RESISTOR NETWORK 47 (1608)

(HIF-1A BOARD [SUFFIX 22, 23] for HDW PLAYER)

Ref. No. or Q'ty	Part No.	SP	Description
RB911	1-239-409-11	s	RESISTOR NETWORK 47 (1608)
RB912	1-239-409-11	s	RESISTOR NETWORK 47 (1608)
RB913	1-239-409-11	s	RESISTOR NETWORK 47 (1608)
RB914	1-239-409-11	s	RESISTOR NETWORK 47 (1608)
RB918	1-233-414-11	s	RESISTOR,CHIP NETWORK 4.7K
RB919	1-233-414-11	s	RESISTOR,CHIP NETWORK 4.7K
RB920	1-233-414-11	s	RESISTOR,CHIP NETWORK 4.7K
RB921	1-233-414-11	s	RESISTOR,CHIP NETWORK 4.7K
RB922	1-233-810-21	s	RES, NETWORK 100K (3216)
RB923	1-233-810-21	s	RES, NETWORK 100K (3216)
RB924	1-233-810-21	s	RES, NETWORK 100K (3216)
RB925	1-233-414-11	s	RESISTOR,CHIP NETWORK 4.7K
RB926	1-233-414-11	s	RESISTOR,CHIP NETWORK 4.7K
RB927	1-239-409-11	s	RESISTOR NETWORK 47 (1608)
RB928	1-239-409-11	s	RESISTOR NETWORK 47 (1608)
RB929	1-239-409-11	s	RESISTOR NETWORK 47 (1608)
RB930	1-239-409-11	s	RESISTOR NETWORK 47 (1608)
RB931	1-233-810-21	s	RES, NETWORK 100K (3216)
RB932	1-239-409-11	s	RESISTOR NETWORK 47 (1608)
RB933	1-239-409-11	s	RESISTOR NETWORK 47 (1608)
RB934	1-239-409-11	s	RESISTOR NETWORK 47 (1608)
RB935	1-233-810-21	s	RES, NETWORK 100K (3216)
RB1100	1-233-575-11	s	RES, CHIP NETWORK 22
RB1101	1-233-575-11	s	RES, CHIP NETWORK 22
RB1102	1-233-575-11	s	RES, CHIP NETWORK 22
RB1103	1-233-575-11	s	RES, CHIP NETWORK 22
RB1104	1-233-412-11	s	RESISTOR,CHIP NETWORK 1K
RB1105	1-233-412-11	s	RESISTOR,CHIP NETWORK 1K
RB1106	1-239-409-11	s	RESISTOR NETWORK 47 (1608)
RB1107	1-239-409-11	s	RESISTOR NETWORK 47 (1608)
RB1108	1-239-409-11	s	RESISTOR NETWORK 47 (1608)
RB1109	1-239-409-11	s	RESISTOR NETWORK 47 (1608)
RB1110	1-239-409-11	s	RESISTOR NETWORK 47 (1608)
RV800	1-241-261-41	s	RESISTOR, ADJ, CERMET 1K
RV801	1-241-261-41	s	RESISTOR, ADJ, CERMET 1K
S50	1-692-881-41	s	SWITCH, SLIDE
S900	1-692-270-41	s	SWITCH, SLIDE
X800	1-767-694-11	s	OSCILLATOR, CRYSTAL
X801	1-781-496-11	s	OSCILLATOR, CRYSTAL
X802	1-781-671-11	s	OSCILLATOR, CRYSTAL
X803	1-781-672-11	s	OSCILLATOR, CRYSTAL
X804	1-781-830-11	s	OSCILLATOR, CRYSTAL
X805	1-781-831-11	s	OSCILLATOR, CRYSTAL

HIF-1A BOARD [SUFFIX 24-] for HDW PLAYER

[Lot No. 3C1 -] HDW-M2100/P, A2100

Ref. No. or Q'ty	Part No.	SP	Description
1pc	A-8327-115-D	s	MOUNTED CIRCUIT BOARD, HIF-1A
1pc	3-629-706-03	o	COVER,SHIELD HIF
1pc	3-701-822-01	s	HOLDER, WIRE
2pcs	7-621-772-18	s	SCREW +B M2X4
6pcs	7-682-902-11	s	SCREW +PWH 2.6X5
1pc	3-179-084-21	s	LEVER (R), PC BOARD
1pc	3-179-085-21	s	LEVER (L), PC BOARD
1pc	3-629-707-02	o	CASE,SHIELD HIF
C102	1-107-826-11	s	CAPACITOR,CHIP CERAMIC 0.1MF
C103	1-107-826-11	s	CAPACITOR,CHIP CERAMIC 0.1MF
C104	1-107-826-11	s	CAPACITOR,CHIP CERAMIC 0.1MF
C110	1-107-826-11	s	CAPACITOR,CHIP CERAMIC 0.1MF
C111	1-107-826-11	s	CAPACITOR,CHIP CERAMIC 0.1MF
C112	1-107-826-11	s	CAPACITOR,CHIP CERAMIC 0.1MF
C200	1-107-826-11	s	CAPACITOR,CHIP CERAMIC 0.1MF
C201	1-107-826-11	s	CAPACITOR,CHIP CERAMIC 0.1MF
C202	1-107-826-11	s	CAPACITOR,CHIP CERAMIC 0.1MF
C203	1-107-826-11	s	CAPACITOR,CHIP CERAMIC 0.1MF
C204	1-107-826-11	s	CAPACITOR,CHIP CERAMIC 0.1MF
C205	1-107-826-11	s	CAPACITOR,CHIP CERAMIC 0.1MF
C206	1-127-692-11	s	CAP, CHIP CERAMIC 10MF B 3216
C207	1-107-826-11	s	CAPACITOR,CHIP CERAMIC 0.1MF
C208	1-107-826-11	s	CAPACITOR,CHIP CERAMIC 0.1MF
C209	1-107-826-11	s	CAPACITOR,CHIP CERAMIC 0.1MF
C210	1-107-826-11	s	CAPACITOR,CHIP CERAMIC 0.1MF
C211	1-127-692-11	s	CAP, CHIP CERAMIC 10MF B 3216
C212	1-107-826-11	s	CAPACITOR,CHIP CERAMIC 0.1MF
C213	1-107-826-11	s	CAPACITOR,CHIP CERAMIC 0.1MF
C214	1-107-826-11	s	CAPACITOR,CHIP CERAMIC 0.1MF
C215	1-107-826-11	s	CAPACITOR,CHIP CERAMIC 0.1MF
C216	1-107-826-11	s	CAPACITOR,CHIP CERAMIC 0.1MF
C217	1-107-826-11	s	CAPACITOR,CHIP CERAMIC 0.1MF
C218	1-107-826-11	s	CAPACITOR,CHIP CERAMIC 0.1MF
C219	1-107-826-11	s	CAPACITOR,CHIP CERAMIC 0.1MF
C220	1-107-826-11	s	CAPACITOR,CHIP CERAMIC 0.1MF
C221	1-107-826-11	s	CAPACITOR,CHIP CERAMIC 0.1MF
C222	1-107-826-11	s	CAPACITOR,CHIP CERAMIC 0.1MF
C223	1-107-826-11	s	CAPACITOR,CHIP CERAMIC 0.1MF
C226	1-127-692-11	s	CAP, CHIP CERAMIC 10MF B 3216
C227	1-125-889-11	s	CAPACITOR, CERAMIC 2.2MF
C228	1-125-889-11	s	CAPACITOR, CERAMIC 2.2MF
C229	1-107-826-11	s	CAPACITOR,CHIP CERAMIC 0.1MF
C232	1-127-692-11	s	CAP, CHIP CERAMIC 10MF B 3216
C233	1-127-692-11	s	CAP, CHIP CERAMIC 10MF B 3216
C234	1-127-692-11	s	CAP, CHIP CERAMIC 10MF B 3216
C235	1-127-692-11	s	CAP, CHIP CERAMIC 10MF B 3216
C300	1-107-826-11	s	CAPACITOR,CHIP CERAMIC 0.1MF
C301	1-107-826-11	s	CAPACITOR,CHIP CERAMIC 0.1MF
C302	1-107-826-11	s	CAPACITOR,CHIP CERAMIC 0.1MF
C303	1-107-826-11	s	CAPACITOR,CHIP CERAMIC 0.1MF
C304	1-107-826-11	s	CAPACITOR,CHIP CERAMIC 0.1MF
C305	1-107-826-11	s	CAPACITOR,CHIP CERAMIC 0.1MF
C306	1-107-826-11	s	CAPACITOR,CHIP CERAMIC 0.1MF
C307	1-107-826-11	s	CAPACITOR,CHIP CERAMIC 0.1MF
C308	1-107-826-11	s	CAPACITOR,CHIP CERAMIC 0.1MF
C309	1-107-826-11	s	CAPACITOR,CHIP CERAMIC 0.1MF
C310	1-107-826-11	s	CAPACITOR,CHIP CERAMIC 0.1MF

(HIF-1A BOARD [SUFFIX 24-] for HDW PLAYER)

Ref. No. or Q'ty	Part No.	SP	Description
C311	1-107-826-11	s	CAPACITOR,CHIP CERAMIC 0.1MF
C312	1-107-826-11	s	CAPACITOR,CHIP CERAMIC 0.1MF
C313	1-107-826-11	s	CAPACITOR,CHIP CERAMIC 0.1MF
C314	1-107-826-11	s	CAPACITOR,CHIP CERAMIC 0.1MF
C315	1-107-826-11	s	CAPACITOR,CHIP CERAMIC 0.1MF
C316	1-107-826-11	s	CAPACITOR,CHIP CERAMIC 0.1MF
C317	1-107-826-11	s	CAPACITOR,CHIP CERAMIC 0.1MF
C318	1-107-826-11	s	CAPACITOR,CHIP CERAMIC 0.1MF
C319	1-107-826-11	s	CAPACITOR,CHIP CERAMIC 0.1MF
C320	1-107-826-11	s	CAPACITOR,CHIP CERAMIC 0.1MF
C321	1-107-826-11	s	CAPACITOR,CHIP CERAMIC 0.1MF
C322	1-107-826-11	s	CAPACITOR,CHIP CERAMIC 0.1MF
C323	1-107-826-11	s	CAPACITOR,CHIP CERAMIC 0.1MF
C324	1-107-826-11	s	CAPACITOR,CHIP CERAMIC 0.1MF
C325	1-107-826-11	s	CAPACITOR,CHIP CERAMIC 0.1MF
C326	1-107-826-11	s	CAPACITOR,CHIP CERAMIC 0.1MF
C327	1-107-826-11	s	CAPACITOR,CHIP CERAMIC 0.1MF
C328	1-107-826-11	s	CAPACITOR,CHIP CERAMIC 0.1MF
C329	1-127-692-11	s	CAP, CHIP CERAMIC 10MF B 3216
C330	1-165-870-21	s	CAPACITOR, ELECT 100MF(6.3X6)
C331	1-107-826-11	s	CAPACITOR,CHIP CERAMIC 0.1MF
C332	1-107-826-11	s	CAPACITOR,CHIP CERAMIC 0.1MF
C333	1-107-826-11	s	CAPACITOR,CHIP CERAMIC 0.1MF
C334	1-107-826-11	s	CAPACITOR,CHIP CERAMIC 0.1MF
C335	1-107-826-11	s	CAPACITOR,CHIP CERAMIC 0.1MF
C336	1-107-826-11	s	CAPACITOR,CHIP CERAMIC 0.1MF
C337	1-107-826-11	s	CAPACITOR,CHIP CERAMIC 0.1MF
C338	1-107-826-11	s	CAPACITOR,CHIP CERAMIC 0.1MF
C339	1-107-826-11	s	CAPACITOR,CHIP CERAMIC 0.1MF
C340	1-107-826-11	s	CAPACITOR,CHIP CERAMIC 0.1MF
C341	1-107-826-11	s	CAPACITOR,CHIP CERAMIC 0.1MF
C342	1-107-826-11	s	CAPACITOR,CHIP CERAMIC 0.1MF
C343	1-107-826-11	s	CAPACITOR,CHIP CERAMIC 0.1MF
C344	1-107-826-11	s	CAPACITOR,CHIP CERAMIC 0.1MF
C345	1-107-826-11	s	CAPACITOR,CHIP CERAMIC 0.1MF
C346	1-107-826-11	s	CAPACITOR,CHIP CERAMIC 0.1MF
C347	1-107-826-11	s	CAPACITOR,CHIP CERAMIC 0.1MF
C348	1-164-227-11	s	CAPACITOR,CERAMIC 0.022MF/25V
C351	1-127-692-11	s	CAP, CHIP CERAMIC 10MF B 3216
C352	1-127-692-11	s	CAP, CHIP CERAMIC 10MF B 3216
C353	1-127-692-11	s	CAP, CHIP CERAMIC 10MF B 3216
C354	1-127-692-11	s	CAP, CHIP CERAMIC 10MF B 3216
C355	1-127-692-11	s	CAP, CHIP CERAMIC 10MF B 3216
C356	1-127-692-11	s	CAP, CHIP CERAMIC 10MF B 3216
C358	1-127-692-11	s	CAP, CHIP CERAMIC 10MF B 3216
C359	1-127-692-11	s	CAP, CHIP CERAMIC 10MF B 3216
C360	1-127-692-11	s	CAP, CHIP CERAMIC 10MF B 3216
C361	1-127-692-11	s	CAP, CHIP CERAMIC 10MF B 3216
C527	1-107-826-11	s	CAPACITOR,CHIP CERAMIC 0.1MF
C528	1-107-826-11	s	CAPACITOR,CHIP CERAMIC 0.1MF
C529	1-107-826-11	s	CAPACITOR,CHIP CERAMIC 0.1MF
C530	1-107-826-11	s	CAPACITOR,CHIP CERAMIC 0.1MF
C531	1-107-826-11	s	CAPACITOR,CHIP CERAMIC 0.1MF
C532	1-107-826-11	s	CAPACITOR,CHIP CERAMIC 0.1MF
C533	1-107-826-11	s	CAPACITOR,CHIP CERAMIC 0.1MF
C534	1-107-826-11	s	CAPACITOR,CHIP CERAMIC 0.1MF
C535	1-107-826-11	s	CAPACITOR,CHIP CERAMIC 0.1MF
C536	1-107-826-11	s	CAPACITOR,CHIP CERAMIC 0.1MF
C537	1-107-826-11	s	CAPACITOR,CHIP CERAMIC 0.1MF

(HIF-1A BOARD [SUFFIX 24-] for HDW PLAYER)

Ref. No. or Q'ty	Part No.	SP	Description
C538	1-127-692-11	s	CAP, CHIP CERAMIC 10MF B 3216
C539	1-127-692-11	s	CAP, CHIP CERAMIC 10MF B 3216
C540	1-107-826-11	s	CAPACITOR,CHIP CERAMIC 0.1MF
C541	1-107-826-11	s	CAPACITOR,CHIP CERAMIC 0.1MF
C542	1-107-826-11	s	CAPACITOR,CHIP CERAMIC 0.1MF
C543	1-107-826-11	s	CAPACITOR,CHIP CERAMIC 0.1MF
C544	1-107-826-11	s	CAPACITOR,CHIP CERAMIC 0.1MF
C545	1-107-826-11	s	CAPACITOR,CHIP CERAMIC 0.1MF
C546	1-107-826-11	s	CAPACITOR,CHIP CERAMIC 0.1MF
C547	1-107-826-11	s	CAPACITOR,CHIP CERAMIC 0.1MF
C548	1-107-826-11	s	CAPACITOR,CHIP CERAMIC 0.1MF
C549	1-107-826-11	s	CAPACITOR,CHIP CERAMIC 0.1MF
C550	1-107-826-11	s	CAPACITOR,CHIP CERAMIC 0.1MF
C551	1-107-826-11	s	CAPACITOR,CHIP CERAMIC 0.1MF
C552	1-107-826-11	s	CAPACITOR,CHIP CERAMIC 0.1MF
C553	1-107-826-11	s	CAPACITOR,CHIP CERAMIC 0.1MF
C555	1-127-692-11	s	CAP, CHIP CERAMIC 10MF B 3216
C556	1-127-692-11	s	CAP, CHIP CERAMIC 10MF B 3216
C557	1-127-692-11	s	CAP, CHIP CERAMIC 10MF B 3216
C558	1-127-692-11	s	CAP, CHIP CERAMIC 10MF B 3216
C559	1-127-692-11	s	CAP, CHIP CERAMIC 10MF B 3216
C560	1-127-692-11	s	CAP, CHIP CERAMIC 10MF B 3216
C600	1-107-826-11	s	CAPACITOR,CHIP CERAMIC 0.1MF
C601	1-107-826-11	s	CAPACITOR,CHIP CERAMIC 0.1MF
C602	1-107-826-11	s	CAPACITOR,CHIP CERAMIC 0.1MF
C603	1-107-826-11	s	CAPACITOR,CHIP CERAMIC 0.1MF
C604	1-107-826-11	s	CAPACITOR,CHIP CERAMIC 0.1MF
C605	1-107-826-11	s	CAPACITOR,CHIP CERAMIC 0.1MF
C606	1-107-826-11	s	CAPACITOR,CHIP CERAMIC 0.1MF
C607	1-107-826-11	s	CAPACITOR,CHIP CERAMIC 0.1MF
C608	1-107-826-11	s	CAPACITOR,CHIP CERAMIC 0.1MF
C609	1-107-826-11	s	CAPACITOR,CHIP CERAMIC 0.1MF
C610	1-107-826-11	s	CAPACITOR,CHIP CERAMIC 0.1MF
C611	1-107-826-11	s	CAPACITOR,CHIP CERAMIC 0.1MF
C612	1-107-826-11	s	CAPACITOR,CHIP CERAMIC 0.1MF
C613	1-107-826-11	s	CAPACITOR,CHIP CERAMIC 0.1MF
C614	1-107-826-11	s	CAPACITOR,CHIP CERAMIC 0.1MF
C615	1-127-692-11	s	CAP, CHIP CERAMIC 10MF B 3216
C617	1-107-826-11	s	CAPACITOR,CHIP CERAMIC 0.1MF
C618	1-107-826-11	s	CAPACITOR,CHIP CERAMIC 0.1MF
C619	1-107-826-11	s	CAPACITOR,CHIP CERAMIC 0.1MF
C620	1-107-826-11	s	CAPACITOR,CHIP CERAMIC 0.1MF
C621	1-107-826-11	s	CAPACITOR,CHIP CERAMIC 0.1MF
C622	1-107-826-11	s	CAPACITOR,CHIP CERAMIC 0.1MF
C623	1-107-826-11	s	CAPACITOR,CHIP CERAMIC 0.1MF
C624	1-107-826-11	s	CAPACITOR,CHIP CERAMIC 0.1MF
C625	1-107-826-11	s	CAPACITOR,CHIP CERAMIC 0.1MF
C626	1-107-826-11	s	CAPACITOR,CHIP CERAMIC 0.1MF
C627	1-107-826-11	s	CAPACITOR,CHIP CERAMIC 0.1MF
C628	1-107-826-11	s	CAPACITOR,CHIP CERAMIC 0.1MF
C629	1-107-826-11	s	CAPACITOR,CHIP CERAMIC 0.1MF
C630	1-107-826-11	s	CAPACITOR,CHIP CERAMIC 0.1MF
C631	1-107-826-11	s	CAPACITOR,CHIP CERAMIC 0.1MF
C632	1-107-826-11	s	CAPACITOR,CHIP CERAMIC 0.1MF
C633	1-107-826-11	s	CAPACITOR,CHIP CERAMIC 0.1MF
C634	1-107-826-11	s	CAPACITOR,CHIP CERAMIC 0.1MF
C635	1-107-826-11	s	CAPACITOR,CHIP CERAMIC 0.1MF
C636	1-107-826-11	s	CAPACITOR,CHIP CERAMIC 0.1MF
C637	1-107-826-11	s	CAPACITOR,CHIP CERAMIC 0.1MF

(HIF-1A BOARD [SUFFIX 24-] for HDW PLAYER)

Ref. No. or Q'ty	Part No.	SP	Description
C638	1-107-826-11	s	CAPACITOR,CHIP CERAMIC 0.1MF
C639	1-127-692-11	s	CAP, CHIP CERAMIC 10MF B 3216
C640	1-127-692-11	s	CAP, CHIP CERAMIC 10MF B 3216
C641	1-127-692-11	s	CAP, CHIP CERAMIC 10MF B 3216
C642	1-165-870-21	s	CAPACITOR, ELECT 100MF(6.3X6)
C646	1-127-692-11	s	CAP, CHIP CERAMIC 10MF B 3216
C701	1-107-826-11	s	CAPACITOR,CHIP CERAMIC 0.1MF
C702	1-107-826-11	s	CAPACITOR,CHIP CERAMIC 0.1MF
C704	1-107-826-11	s	CAPACITOR,CHIP CERAMIC 0.1MF
C705	1-107-826-11	s	CAPACITOR,CHIP CERAMIC 0.1MF
C706	1-107-826-11	s	CAPACITOR,CHIP CERAMIC 0.1MF
C707	1-107-826-11	s	CAPACITOR,CHIP CERAMIC 0.1MF
C708	1-127-692-11	s	CAP, CHIP CERAMIC 10MF B 3216
C709	1-107-826-11	s	CAPACITOR,CHIP CERAMIC 0.1MF
C710	1-107-826-11	s	CAPACITOR,CHIP CERAMIC 0.1MF
C711	1-107-826-11	s	CAPACITOR,CHIP CERAMIC 0.1MF
C712	1-107-826-11	s	CAPACITOR,CHIP CERAMIC 0.1MF
C713	1-127-692-11	s	CAP, CHIP CERAMIC 10MF B 3216
C714	1-107-826-11	s	CAPACITOR,CHIP CERAMIC 0.1MF
C719	1-107-826-11	s	CAPACITOR,CHIP CERAMIC 0.1MF
C721	1-107-826-11	s	CAPACITOR,CHIP CERAMIC 0.1MF
C722	1-107-826-11	s	CAPACITOR,CHIP CERAMIC 0.1MF
C724	1-107-826-11	s	CAPACITOR,CHIP CERAMIC 0.1MF
C727	1-107-826-11	s	CAPACITOR,CHIP CERAMIC 0.1MF
C728	1-107-826-11	s	CAPACITOR,CHIP CERAMIC 0.1MF
C730	1-107-826-11	s	CAPACITOR,CHIP CERAMIC 0.1MF
C733	1-127-692-11	s	CAP, CHIP CERAMIC 10MF B 3216
C734	1-127-692-11	s	CAP, CHIP CERAMIC 10MF B 3216
C746	1-162-970-11	s	CAPACITOR CERAMIC 0.01MF/25V B
C747	1-107-826-11	s	CAPACITOR,CHIP CERAMIC 0.1MF
C800	1-165-870-21	s	CAPACITOR, ELECT 100MF(6.3X6)
C801	1-165-870-21	s	CAPACITOR, ELECT 100MF(6.3X6)
C802	1-107-826-11	s	CAPACITOR,CHIP CERAMIC 0.1MF
C803	1-107-826-11	s	CAPACITOR,CHIP CERAMIC 0.1MF
C804	1-107-826-11	s	CAPACITOR,CHIP CERAMIC 0.1MF
C805	1-107-826-11	s	CAPACITOR,CHIP CERAMIC 0.1MF
C806	1-107-826-11	s	CAPACITOR,CHIP CERAMIC 0.1MF
C807	1-107-826-11	s	CAPACITOR,CHIP CERAMIC 0.1MF
C808	1-107-826-11	s	CAPACITOR,CHIP CERAMIC 0.1MF
C809	1-107-826-11	s	CAPACITOR,CHIP CERAMIC 0.1MF
C810	1-107-826-11	s	CAPACITOR,CHIP CERAMIC 0.1MF
C811	1-107-826-11	s	CAPACITOR,CHIP CERAMIC 0.1MF
C812	1-107-826-11	s	CAPACITOR,CHIP CERAMIC 0.1MF
C813	1-107-826-11	s	CAPACITOR,CHIP CERAMIC 0.1MF
C814	1-107-826-11	s	CAPACITOR,CHIP CERAMIC 0.1MF
C815	1-107-826-11	s	CAPACITOR,CHIP CERAMIC 0.1MF
C816	1-107-826-11	s	CAPACITOR,CHIP CERAMIC 0.1MF
C817	1-107-826-11	s	CAPACITOR,CHIP CERAMIC 0.1MF
C818	1-107-826-11	s	CAPACITOR,CHIP CERAMIC 0.1MF
C819	1-107-826-11	s	CAPACITOR,CHIP CERAMIC 0.1MF
C820	1-107-826-11	s	CAPACITOR,CHIP CERAMIC 0.1MF
C821	1-107-826-11	s	CAPACITOR,CHIP CERAMIC 0.1MF
C822	1-107-826-11	s	CAPACITOR,CHIP CERAMIC 0.1MF
C823	1-107-826-11	s	CAPACITOR,CHIP CERAMIC 0.1MF
C824	1-107-826-11	s	CAPACITOR,CHIP CERAMIC 0.1MF
C825	1-107-826-11	s	CAPACITOR,CHIP CERAMIC 0.1MF
C826	1-107-826-11	s	CAPACITOR,CHIP CERAMIC 0.1MF
C827	1-107-826-11	s	CAPACITOR,CHIP CERAMIC 0.1MF
C828	1-107-826-11	s	CAPACITOR,CHIP CERAMIC 0.1MF

(HIF-1A BOARD [SUFFIX 24-] for HDW PLAYER)

Ref. No. or Q'ty	Part No.	SP	Description
C829	1-107-826-11	s	CAPACITOR,CHIP CERAMIC 0.1MF
C830	1-107-826-11	s	CAPACITOR,CHIP CERAMIC 0.1MF
C831	1-107-826-11	s	CAPACITOR,CHIP CERAMIC 0.1MF
C832	1-107-826-11	s	CAPACITOR,CHIP CERAMIC 0.1MF
C833	1-107-826-11	s	CAPACITOR,CHIP CERAMIC 0.1MF
C834	1-107-826-11	s	CAPACITOR,CHIP CERAMIC 0.1MF
C835	1-107-826-11	s	CAPACITOR,CHIP CERAMIC 0.1MF
C836	1-107-826-11	s	CAPACITOR,CHIP CERAMIC 0.1MF
C837	1-107-826-11	s	CAPACITOR,CHIP CERAMIC 0.1MF
C838	1-162-919-11	s	CAPACITOR,CERAMIC 22PF/50V CH
C839	1-162-928-11	s	CAPACITOR,CERAMIC 120PF/50V CH
C840	1-107-826-11	s	CAPACITOR,CHIP CERAMIC 0.1MF
C841	1-107-826-11	s	CAPACITOR,CHIP CERAMIC 0.1MF
C842	1-107-826-11	s	CAPACITOR,CHIP CERAMIC 0.1MF
C843	1-125-891-11	s	CAPACITOR CERAMIC 0.47MF/10V
C844	1-125-891-11	s	CAPACITOR CERAMIC 0.47MF/10V
C845	1-107-826-11	s	CAPACITOR,CHIP CERAMIC 0.1MF
C846	1-107-826-11	s	CAPACITOR,CHIP CERAMIC 0.1MF
C847	1-107-826-11	s	CAPACITOR,CHIP CERAMIC 0.1MF
C848	1-162-923-11	s	CAPACITOR,CERAMIC 47PF/50V CH
C849	1-162-970-11	s	CAPACITOR CERAMIC 0.01MF/25V B
C850	1-107-826-11	s	CAPACITOR,CHIP CERAMIC 0.1MF
C851	1-162-928-11	s	CAPACITOR,CERAMIC 120PF/50V CH
C852	1-107-826-11	s	CAPACITOR,CHIP CERAMIC 0.1MF
C853	1-162-927-11	s	CAPACITOR,CERAMIC 100PF/50V CH
C854	1-107-826-11	s	CAPACITOR,CHIP CERAMIC 0.1MF
C855	1-162-923-11	s	CAPACITOR,CERAMIC 47PF/50V CH
C856	1-107-826-11	s	CAPACITOR,CHIP CERAMIC 0.1MF
C857	1-107-826-11	s	CAPACITOR,CHIP CERAMIC 0.1MF
C858	1-162-924-11	s	CAPACITOR,CERAMIC 56PF/50V CH
C859	1-107-826-11	s	CAPACITOR,CHIP CERAMIC 0.1MF
C860	1-107-826-11	s	CAPACITOR,CHIP CERAMIC 0.1MF
C861	1-107-826-11	s	CAPACITOR,CHIP CERAMIC 0.1MF
C862	1-162-928-11	s	CAPACITOR,CERAMIC 120PF/50V CH
C863	1-107-826-11	s	CAPACITOR,CHIP CERAMIC 0.1MF
C864	1-162-928-11	s	CAPACITOR,CERAMIC 120PF/50V CH
C865	1-127-950-11	s	CAPACITOR,CHIP FILM 0.01MF
C866	1-127-950-11	s	CAPACITOR,CHIP FILM 0.01MF
C867	1-127-950-11	s	CAPACITOR,CHIP FILM 0.01MF
C868	1-127-956-11	s	CAPACITOR,CHIP FILM 0.1MF
C869	1-127-956-11	s	CAPACITOR,CHIP FILM 0.1MF
C870	1-127-956-11	s	CAPACITOR,CHIP FILM 0.1MF
C871	1-127-950-11	s	CAPACITOR,CHIP FILM 0.01MF
C872	1-127-956-11	s	CAPACITOR,CHIP FILM 0.1MF
C873	1-107-826-11	s	CAPACITOR,CHIP CERAMIC 0.1MF
C874	1-107-826-11	s	CAPACITOR,CHIP CERAMIC 0.1MF
C875	1-107-826-11	s	CAPACITOR,CHIP CERAMIC 0.1MF
C876	1-107-826-11	s	CAPACITOR,CHIP CERAMIC 0.1MF
C877	1-107-826-11	s	CAPACITOR,CHIP CERAMIC 0.1MF
C878	1-107-826-11	s	CAPACITOR,CHIP CERAMIC 0.1MF
C879	1-107-826-11	s	CAPACITOR,CHIP CERAMIC 0.1MF
C880	1-107-826-11	s	CAPACITOR,CHIP CERAMIC 0.1MF
C881	1-107-826-11	s	CAPACITOR,CHIP CERAMIC 0.1MF
C882	1-107-826-11	s	CAPACITOR,CHIP CERAMIC 0.1MF
C883	1-107-826-11	s	CAPACITOR,CHIP CERAMIC 0.1MF
C884	1-107-826-11	s	CAPACITOR,CHIP CERAMIC 0.1MF
C885	1-127-692-11	s	CAP, CHIP CERAMIC 10MF B 3216
C886	1-107-826-11	s	CAPACITOR,CHIP CERAMIC 0.1MF
C887	1-107-826-11	s	CAPACITOR,CHIP CERAMIC 0.1MF

(HIF-1A BOARD [SUFFIX 24-] for HDW PLAYER)

Ref. No. or Q'ty	Part No.	SP	Description
C888	1-107-826-11	s	CAPACITOR,CHIP CERAMIC 0.1MF
C889	1-107-826-11	s	CAPACITOR,CHIP CERAMIC 0.1MF
C890	1-107-826-11	s	CAPACITOR,CHIP CERAMIC 0.1MF
C891	1-107-826-11	s	CAPACITOR,CHIP CERAMIC 0.1MF
C892	1-107-826-11	s	CAPACITOR,CHIP CERAMIC 0.1MF
C893	1-107-826-11	s	CAPACITOR,CHIP CERAMIC 0.1MF
C894	1-107-826-11	s	CAPACITOR,CHIP CERAMIC 0.1MF
C895	1-107-826-11	s	CAPACITOR,CHIP CERAMIC 0.1MF
C896	1-107-826-11	s	CAPACITOR,CHIP CERAMIC 0.1MF
C897	1-107-826-11	s	CAPACITOR,CHIP CERAMIC 0.1MF
C898	1-107-826-11	s	CAPACITOR,CHIP CERAMIC 0.1MF
C899	1-107-826-11	s	CAPACITOR,CHIP CERAMIC 0.1MF
C900	1-162-970-11	s	CAPACITOR CERAMIC 0.01MF/25V B
C901	1-107-826-11	s	CAPACITOR,CHIP CERAMIC 0.1MF
C902	1-107-826-11	s	CAPACITOR,CHIP CERAMIC 0.1MF
C903	1-107-826-11	s	CAPACITOR,CHIP CERAMIC 0.1MF
C904	1-107-826-11	s	CAPACITOR,CHIP CERAMIC 0.1MF
C905	1-107-826-11	s	CAPACITOR,CHIP CERAMIC 0.1MF
C906	1-107-826-11	s	CAPACITOR,CHIP CERAMIC 0.1MF
C907	1-107-826-11	s	CAPACITOR,CHIP CERAMIC 0.1MF
C908	1-107-826-11	s	CAPACITOR,CHIP CERAMIC 0.1MF
C909	1-107-826-11	s	CAPACITOR,CHIP CERAMIC 0.1MF
C910	1-107-826-11	s	CAPACITOR,CHIP CERAMIC 0.1MF
C911	1-107-826-11	s	CAPACITOR,CHIP CERAMIC 0.1MF
C912	1-107-826-11	s	CAPACITOR,CHIP CERAMIC 0.1MF
C913	1-107-826-11	s	CAPACITOR,CHIP CERAMIC 0.1MF
C914	1-107-826-11	s	CAPACITOR,CHIP CERAMIC 0.1MF
C915	1-107-826-11	s	CAPACITOR,CHIP CERAMIC 0.1MF
C916	1-107-826-11	s	CAPACITOR,CHIP CERAMIC 0.1MF
C917	1-107-826-11	s	CAPACITOR,CHIP CERAMIC 0.1MF
C918	1-107-826-11	s	CAPACITOR,CHIP CERAMIC 0.1MF
C919	1-107-826-11	s	CAPACITOR,CHIP CERAMIC 0.1MF
C920	1-107-826-11	s	CAPACITOR,CHIP CERAMIC 0.1MF
C921	1-127-692-11	s	CAP, CHIP CERAMIC 10MF B 3216
C922	1-127-692-11	s	CAP, CHIP CERAMIC 10MF B 3216
C923	1-107-826-11	s	CAPACITOR,CHIP CERAMIC 0.1MF
C924	1-127-692-11	s	CAP, CHIP CERAMIC 10MF B 3216
C925	1-162-927-11	s	CAPACITOR,CERAMIC 100PF/50V CH
C926	1-162-927-11	s	CAPACITOR,CERAMIC 100PF/50V CH
C927	1-162-927-11	s	CAPACITOR,CERAMIC 100PF/50V CH
C928	1-127-692-11	s	CAP, CHIP CERAMIC 10MF B 3216
C929	1-127-692-11	s	CAP, CHIP CERAMIC 10MF B 3216
C930	1-127-692-11	s	CAP, CHIP CERAMIC 10MF B 3216
C931	1-127-692-11	s	CAP, CHIP CERAMIC 10MF B 3216
C932	1-127-692-11	s	CAP, CHIP CERAMIC 10MF B 3216
C933	1-107-826-11	s	CAPACITOR,CHIP CERAMIC 0.1MF
C934	1-107-826-11	s	CAPACITOR,CHIP CERAMIC 0.1MF
C935	1-107-826-11	s	CAPACITOR,CHIP CERAMIC 0.1MF
C936	1-107-826-11	s	CAPACITOR,CHIP CERAMIC 0.1MF
C937	1-107-826-11	s	CAPACITOR,CHIP CERAMIC 0.1MF
C938	1-107-826-11	s	CAPACITOR,CHIP CERAMIC 0.1MF
C939	1-107-826-11	s	CAPACITOR,CHIP CERAMIC 0.1MF
C940	1-107-826-11	s	CAPACITOR,CHIP CERAMIC 0.1MF
C941	1-107-826-11	s	CAPACITOR,CHIP CERAMIC 0.1MF
C942	1-107-826-11	s	CAPACITOR,CHIP CERAMIC 0.1MF
C943	1-107-826-11	s	CAPACITOR,CHIP CERAMIC 0.1MF
C944	1-107-826-11	s	CAPACITOR,CHIP CERAMIC 0.1MF
C945	1-107-826-11	s	CAPACITOR,CHIP CERAMIC 0.1MF
C946	1-107-826-11	s	CAPACITOR,CHIP CERAMIC 0.1MF

(HIF-1A BOARD [SUFFIX 24-] for HDW PLAYER)

Ref. No. or Q'ty	Part No.	SP	Description
C981	1-107-826-11	s	CAPACITOR,CHIP CERAMIC 0.1MF
C1000	1-127-692-11	s	CAP, CHIP CERAMIC 10MF B 3216
C1001	1-127-692-11	s	CAP, CHIP CERAMIC 10MF B 3216
C1002	1-127-692-11	s	CAP, CHIP CERAMIC 10MF B 3216
C1003	1-107-826-11	s	CAPACITOR,CHIP CERAMIC 0.1MF
C1004	1-107-826-11	s	CAPACITOR,CHIP CERAMIC 0.1MF
C1005	1-107-826-11	s	CAPACITOR,CHIP CERAMIC 0.1MF
C1006	1-107-826-11	s	CAPACITOR,CHIP CERAMIC 0.1MF
C1007	1-107-826-11	s	CAPACITOR,CHIP CERAMIC 0.1MF
C1008	1-107-826-11	s	CAPACITOR,CHIP CERAMIC 0.1MF
C1009	1-107-826-11	s	CAPACITOR,CHIP CERAMIC 0.1MF
C1010	1-107-826-11	s	CAPACITOR,CHIP CERAMIC 0.1MF
C1011	1-107-826-11	s	CAPACITOR,CHIP CERAMIC 0.1MF
C1012	1-107-826-11	s	CAPACITOR,CHIP CERAMIC 0.1MF
C1013	1-127-692-11	s	CAP, CHIP CERAMIC 10MF B 3216
C1014	1-127-692-11	s	CAP, CHIP CERAMIC 10MF B 3216
C1015	1-165-870-21	s	CAPACITOR, ELECT 100MF(6.3X6)
C1016	1-127-692-11	s	CAP, CHIP CERAMIC 10MF B 3216
C1017	1-165-870-21	s	CAPACITOR, ELECT 100MF(6.3X6)
C1018	1-127-692-11	s	CAP, CHIP CERAMIC 10MF B 3216
C1019	1-135-342-11	s	CAPACITOR,SOLID ELECT 56MF
C1020	1-127-692-11	s	CAP, CHIP CERAMIC 10MF B 3216
C1022	1-162-970-11	s	CAPACITOR CERAMIC 0.01MF/25V B
C1023	1-127-692-11	s	CAP, CHIP CERAMIC 10MF B 3216
C1024	1-127-692-11	s	CAP, CHIP CERAMIC 10MF B 3216
C1025	1-107-826-11	s	CAPACITOR,CHIP CERAMIC 0.1MF
C1026	1-107-826-11	s	CAPACITOR,CHIP CERAMIC 0.1MF
C1027	1-127-692-11	s	CAP, CHIP CERAMIC 10MF B 3216
C1028	1-127-692-11	s	CAP, CHIP CERAMIC 10MF B 3216
C1029	1-115-416-11	s	CAPACITOR,CERAMIC 1000PF/25V
C1030	1-127-692-11	s	CAP, CHIP CERAMIC 10MF B 3216
C1031	1-107-826-11	s	CAPACITOR,CHIP CERAMIC 0.1MF
C1032	1-107-826-11	s	CAPACITOR,CHIP CERAMIC 0.1MF
C1033	1-125-889-11	s	CAPACITOR, CERAMIC 2.2MF
C1034	1-107-826-11	s	CAPACITOR,CHIP CERAMIC 0.1MF
C1035	1-127-692-11	s	CAP, CHIP CERAMIC 10MF B 3216
C1036	1-127-692-11	s	CAP, CHIP CERAMIC 10MF B 3216
C1037	1-115-416-11	s	CAPACITOR,CERAMIC 1000PF/25V
C1038	1-162-970-11	s	CAPACITOR CERAMIC 0.01MF/25V B
C1040	1-127-692-11	s	CAP, CHIP CERAMIC 10MF B 3216
C1041	1-127-692-11	s	CAP, CHIP CERAMIC 10MF B 3216
C1042	1-107-826-11	s	CAPACITOR,CHIP CERAMIC 0.1MF
C1043	1-135-342-11	s	CAPACITOR,SOLID ELECT 56MF
C1044	1-107-826-11	s	CAPACITOR,CHIP CERAMIC 0.1MF
C1064	1-135-342-11	s	CAPACITOR,SOLID ELECT 56MF
C1065	1-165-870-21	s	CAPACITOR, ELECT 100MF(6.3X6)
C1066	1-165-870-21	s	CAPACITOR, ELECT 100MF(6.3X6)
C1067	1-127-692-11	s	CAP, CHIP CERAMIC 10MF B 3216
C1068	1-127-692-11	s	CAP, CHIP CERAMIC 10MF B 3216
C1069	1-127-692-11	s	CAP, CHIP CERAMIC 10MF B 3216
C1070	1-127-692-11	s	CAP, CHIP CERAMIC 10MF B 3216
C1071	1-127-692-11	s	CAP, CHIP CERAMIC 10MF B 3216
C1072	1-127-692-11	s	CAP, CHIP CERAMIC 10MF B 3216
C1100	1-107-826-11	s	CAPACITOR,CHIP CERAMIC 0.1MF
C1101	1-107-826-11	s	CAPACITOR,CHIP CERAMIC 0.1MF
C1102	1-107-826-11	s	CAPACITOR,CHIP CERAMIC 0.1MF
C1103	1-107-826-11	s	CAPACITOR,CHIP CERAMIC 0.1MF
C1104	1-107-826-11	s	CAPACITOR,CHIP CERAMIC 0.1MF
C1105	1-107-826-11	s	CAPACITOR,CHIP CERAMIC 0.1MF

(HIF-1A BOARD [SUFFIX 24-] for HDW PLAYER)

Ref. No. or Q'ty	Part No.	SP	Description
C1106	1-107-826-11	s	CAPACITOR,CHIP CERAMIC 0.1MF
C1800	1-107-826-11	s	CAPACITOR,CHIP CERAMIC 0.1MF
C1801	1-107-826-11	s	CAPACITOR,CHIP CERAMIC 0.1MF
C1802	1-107-826-11	s	CAPACITOR,CHIP CERAMIC 0.1MF
C1803	1-107-826-11	s	CAPACITOR,CHIP CERAMIC 0.1MF
C1804	1-107-826-11	s	CAPACITOR,CHIP CERAMIC 0.1MF
C1805	1-107-826-11	s	CAPACITOR,CHIP CERAMIC 0.1MF
C1806	1-165-870-21	s	CAPACITOR, ELECT 100MF(6.3X6)
C1808	1-127-692-11	s	CAP, CHIP CERAMIC 10MF B 3216
C1809	1-127-692-11	s	CAP, CHIP CERAMIC 10MF B 3216
C1810	1-127-692-11	s	CAP, CHIP CERAMIC 10MF B 3216
C1811	1-127-692-11	s	CAP, CHIP CERAMIC 10MF B 3216
CN200	1-580-789-91	s	PIN, CONNECTOR 6P
D700	8-719-820-41	s	DIODE 1SS302
D1000	8-719-066-98	s	DIODE RB051L-40
D1001	8-719-938-75	s	DIODE SB05-05CP (RECTI)
D1002	8-719-938-75	s	DIODE SB05-05CP (RECTI)
D1003	8-719-066-98	s	DIODE RB051L-40
D1004	8-719-938-75	s	DIODE SB05-05CP (RECTI)
D1005	8-719-938-75	s	DIODE SB05-05CP (RECTI)
E200	1-535-877-22	s	CHIP,CHECKER (TEST POINT)
E300	1-535-877-22	s	CHIP,CHECKER (TEST POINT)
E500	1-535-877-22	s	CHIP,CHECKER (TEST POINT)
E600	1-535-877-22	s	CHIP,CHECKER (TEST POINT)
E700	1-535-877-22	s	CHIP,CHECKER (TEST POINT)
E900	1-535-877-22	s	CHIP,CHECKER (TEST POINT)
F1000	⚠ 1-576-270-11	s	FUSE CHIP 4A/125V (6125)
F1001	⚠ 1-576-329-11	s	FUSE CHIP 10A/125V (6125)
FB700	1-414-864-11	s	INDUCTOR, MICRO (CHIP TYPE)
FB702	1-414-864-11	s	INDUCTOR, MICRO (CHIP TYPE)
FB800	1-414-864-11	s	INDUCTOR, MICRO (CHIP TYPE)
FB801	1-414-864-11	s	INDUCTOR, MICRO (CHIP TYPE)
FB802	1-414-864-11	s	INDUCTOR, MICRO (CHIP TYPE)
FB803	1-414-864-11	s	INDUCTOR, MICRO (CHIP TYPE)
FB804	1-414-864-11	s	INDUCTOR, MICRO (CHIP TYPE)
FB805	1-414-864-11	s	INDUCTOR, MICRO (CHIP TYPE)
FB806	1-414-864-11	s	INDUCTOR, MICRO (CHIP TYPE)
FB807	1-414-864-11	s	INDUCTOR, MICRO (CHIP TYPE)
FB808	1-414-864-11	s	INDUCTOR, MICRO (CHIP TYPE)
FB809	1-414-864-11	s	INDUCTOR, MICRO (CHIP TYPE)
FB810	1-414-864-11	s	INDUCTOR, MICRO (CHIP TYPE)
IC102	8-759-712-31	s	IC SN65LVDT388DBTR
IC103	8-759-712-31	s	IC SN65LVDT388DBTR
IC104	8-759-712-31	s	IC SN65LVDT388DBTR
IC110	6-700-804-01	s	IC SN74LVC574APWR
IC111	6-700-804-01	s	IC SN74LVC574APWR
IC112	6-700-804-01	s	IC SN74LVC574APWR
IC201	8-759-549-01	s	IC SN74LV125APWR
IC202	8-759-679-55	s	IC SN74LVC08APWR
IC203	8-759-662-39	s	IC 74VHCT245AMTCX
IC204	6-702-148-01	s	IC XC61CN2702NR
IC205	8-759-539-53	s	IC MB90096PF-G-139-BND(ER)
IC206	6-704-718-01	s	IC XC18V02VQG44C
IC208	6-706-484-01	s	IC TC7SH04FU(T5RSOYJF)
IC209	8-759-669-44	s	IC SN74LVC74APWR-12
IC301	8-759-549-15	s	IC SN74LV245APWR

(HIF-1A BOARD [SUFFIX 24-] for HDW PLAYER)

Ref. No. or Q'ty	Part No.	SP	Description
IC302	6-705-983-01	s	IC IS42S32200B-6TL-TR
IC303	6-705-983-01	s	IC IS42S32200B-6TL-TR
IC304	6-705-983-01	s	IC IS42S32200B-6TL-TR
IC305	6-705-983-01	s	IC IS42S32200B-6TL-TR
IC504	6-705-983-01	s	IC IS42S32200B-6TL-TR
IC505	6-705-983-01	s	IC IS42S32200B-6TL-TR
IC601	6-705-983-01	s	IC IS42S32200B-6TL-TR
IC602	8-759-392-77	s	IC SN74LVC245APW (E20)
IC603	8-759-392-77	s	IC SN74LVC245APW (E20)
IC604	8-759-392-77	s	IC SN74LVC245APW (E20)
IC605	6-706-487-01	s	IC TC7SH08FU(T5RSOYJF)
IC606	6-706-487-01	s	IC TC7SH08FU(T5RSOYJF)
IC701	8-759-392-77	s	IC SN74LVC245APW (E20)
IC703	8-759-598-13	s	IC CDC2510CPWR
IC704	8-759-694-36	s	IC SN74CBTLV3257PWR
IC705	8-759-639-85	s	IC SN65LVDS31DR
IC706	8-759-592-47	s	IC TC7SZ08FU(TE85R)
IC707	8-759-392-77	s	IC SN74LVC245APW (E20)
IC708	8-759-392-77	s	IC SN74LVC245APW (E20)
IC709	6-706-487-01	s	IC TC7SH08FU(T5RSOYJF)
IC713	8-759-598-13	s	IC CDC2510CPWR
IC724	8-759-698-08	s	IC SN74CBTLV1G125DCKR
IC725	8-759-698-08	s	IC SN74CBTLV1G125DCKR
IC726	6-706-484-01	s	IC TC7SH04FU(T5RSOYJF)
IC730	8-759-675-47	s	IC SN74LVC04APWR
IC733	6-703-875-01	s	IC CDCVF2505PWR
IC800	8-759-573-91	s	IC AD8055ARTZ-REEL7
IC801	6-704-406-01	s	IC LM1881MX/NOPB
IC802	8-759-573-91	s	IC AD8055ARTZ-REEL7
IC803	6-701-453-01	s	IC SN75207BNSR
IC804	6-706-487-01	s	IC TC7SH08FU(T5RSOYJF)
IC805	8-759-472-35	s	IC 74VHC221AMTCX
IC806	8-759-472-04	s	IC 74VHC74MTCX
IC807	8-759-472-35	s	IC 74VHC221AMTCX
IC808	8-759-678-15	s	IC TLV2231CDBVR
IC809	6-706-478-01	s	IC TC7SET08FU(T5RSOJF)
IC810	8-759-678-15	s	IC TLV2231CDBVR
IC811	8-759-678-15	s	IC TLV2231CDBVR
IC812	8-759-678-15	s	IC TLV2231CDBVR
IC813	8-759-564-49	s	IC TC7W53FU-TE12R
IC814	8-759-564-49	s	IC TC7W53FU-TE12R
IC815	8-759-592-47	s	IC TC7SZ08FU(TE85R)
IC816	8-759-592-49	s	IC TC7SZ125FU(TE85R)
IC817	8-759-592-49	s	IC TC7SZ125FU(TE85R)
IC818	8-759-592-47	s	IC TC7SZ08FU(TE85R)
IC819	8-759-592-47	s	IC TC7SZ08FU(TE85R)
IC820	8-759-592-49	s	IC TC7SZ125FU(TE85R)
IC821	8-759-592-47	s	IC TC7SZ08FU(TE85R)
IC822	8-759-524-08	s	IC TC74VHC139FT(EL)
IC823	8-759-592-49	s	IC TC7SZ125FU(TE85R)
IC824	8-759-592-47	s	IC TC7SZ08FU(TE85R)
IC825	8-759-592-47	s	IC TC7SZ08FU(TE85R)
IC826	8-759-592-47	s	IC TC7SZ08FU(TE85R)
IC827	8-759-183-53	s	IC TL431CPK-E2
IC828	8-759-669-78	s	IC TLC2933IPWR-12
IC829	8-759-669-78	s	IC TLC2933IPWR-12
IC830	8-759-472-35	s	IC 74VHC221AMTCX
IC831	8-759-559-82	s	IC UPC29M33T-E1
IC900	8-759-549-15	s	IC SN74LV245APWR

(HIF-1A BOARD [SUFFIX 24-] for HDW PLAYER)

Ref. No. or Q'ty	Part No.	SP	Description
IC901	8-759-549-15	s	IC SN74LV245APWR
IC902	8-759-549-15	s	IC SN74LV245APWR
IC903	8-759-549-15	s	IC SN74LV245APWR
IC904	8-759-392-77	s	IC SN74LVC245APW (E20)
IC905	8-759-549-15	s	IC SN74LV245APWR
IC906	8-759-549-15	s	IC SN74LV245APWR
IC907	8-759-549-15	s	IC SN74LV245APWR
IC908	8-759-549-15	s	IC SN74LV245APWR
IC910	8-759-549-15	s	IC SN74LV245APWR
IC912	8-759-549-15	s	IC SN74LV245APWR
IC913	8-759-662-38	s	IC 74VHCT08AMTCX
IC914	8-759-471-96	s	IC 74VHC08MTCX
IC915	8-759-592-49	s	IC TC7SZ125FU(TE85R)
IC916	8-759-549-15	s	IC SN74LV245APWR
IC917	6-704-174-01	s	IC MS81V04160A-25TBZ03J
IC918	8-759-392-77	s	IC SN74LVC245APW (E20)
IC919	6-706-484-01	s	IC TC7SH04FU(T5RSOYJF)
IC920	8-759-549-15	s	IC SN74LV245APWR
IC980	6-704-718-01	s	IC XC18V02VQG44C
IC1000	8-759-642-22	s	IC UPC29M05T-E2
IC1001	8-759-539-89	s	IC LM2990SX-5.0
IC1002	8-759-642-22	s	IC UPC29M05T-E2
IC1003	6-706-487-01	s	IC TC7SH08FU(T5RSOYJF)
IC1004	8-759-597-57	s	IC LTC1628CG#TR
IC1100	8-759-392-77	s	IC SN74LVC245APW (E20)
IC1101	8-759-392-77	s	IC SN74LVC245APW (E20)
IC1102	8-759-392-77	s	IC SN74LVC245APW (E20)
IC1103	8-759-549-15	s	IC SN74LV245APWR
IC1104	8-759-472-24	s	IC 74VHC157MTCX
IC1105	8-759-472-24	s	IC 74VHC157MTCX
IC1106	8-759-471-91	s	IC 74VHC04MTCX
L800	1-412-987-31	s	INDUCTOR (SMALL TYPE) 4.70UH
L1000	1-419-630-11	s	COIL, CHOKE 4.7UH
L1001	1-419-630-11	s	COIL, CHOKE 4.7UH
L1002	1-419-630-11	s	COIL, CHOKE 4.7UH
L1003	1-419-630-11	s	COIL, CHOKE 4.7UH
L1004	1-419-630-11	s	COIL, CHOKE 4.7UH
L1005	1-469-970-11	s	INDUCTOR, (SMD) 15UH
L1006	1-469-970-11	s	INDUCTOR, (SMD) 15UH
L1007	1-419-630-11	s	COIL, CHOKE 4.7UH
L1008	1-419-630-11	s	COIL, CHOKE 4.7UH
Q200	8-729-928-81	s	TRANSISTOR DTC144EE
Q201	8-729-928-54	s	TRANSISTOR DTA123JE
Q202	8-729-928-19	s	TRANSISTOR 2SA1774R
Q203	8-729-047-32	s	TRANSISTOR SI4425DY-T1
Q701	8-729-928-81	s	TRANSISTOR DTC144EE
Q704	8-729-928-19	s	TRANSISTOR 2SA1774R
Q800	8-729-928-19	s	TRANSISTOR 2SA1774R
Q801	8-729-927-99	s	TRANSISTOR 2SC4617R
Q802	8-729-143-07	s	TRANSISTOR 2SA1610-Y33
Q1000	8-729-047-85	s	TRANSISTOR SI4416DY-T1
Q1001	8-729-047-85	s	TRANSISTOR SI4416DY-T1
Q1002	8-729-047-85	s	TRANSISTOR SI4416DY-T1
Q1003	8-729-047-85	s	TRANSISTOR SI4416DY-T1
R125	1-211-985-11	s	RESISTOR,CHIP 47 1/10W (1608)
R207	1-211-985-11	s	RESISTOR,CHIP 47 1/10W (1608)
R208	1-211-985-11	s	RESISTOR,CHIP 47 1/10W (1608)
R209	1-211-985-11	s	RESISTOR,CHIP 47 1/10W (1608)

(HIF-1A BOARD [SUFFIX 24-] for HDW PLAYER)

Ref. No. or Q'ty	Part No.	SP	Description
R210	1-211-985-11	s	RESISTOR,CHIP 47 1/10W (1608)
R211	1-211-985-11	s	RESISTOR,CHIP 47 1/10W (1608)
R212	1-211-985-11	s	RESISTOR,CHIP 47 1/10W (1608)
R213	1-211-985-11	s	RESISTOR,CHIP 47 1/10W (1608)
R214	1-211-985-11	s	RESISTOR,CHIP 47 1/10W (1608)
R215	1-211-985-11	s	RESISTOR,CHIP 47 1/10W (1608)
R216	1-211-985-11	s	RESISTOR,CHIP 47 1/10W (1608)
R217	1-211-985-11	s	RESISTOR,CHIP 47 1/10W (1608)
R218	1-211-985-11	s	RESISTOR,CHIP 47 1/10W (1608)
R219	1-211-985-11	s	RESISTOR,CHIP 47 1/10W (1608)
R220	1-211-985-11	s	RESISTOR,CHIP 47 1/10W (1608)
R221	1-211-985-11	s	RESISTOR,CHIP 47 1/10W (1608)
R222	1-211-985-11	s	RESISTOR,CHIP 47 1/10W (1608)
R229	1-211-985-11	s	RESISTOR,CHIP 47 1/10W (1608)
R230	1-211-985-11	s	RESISTOR,CHIP 47 1/10W (1608)
R231	1-211-985-11	s	RESISTOR,CHIP 47 1/10W (1608)
R232	1-211-985-11	s	RESISTOR,CHIP 47 1/10W (1608)
R233	1-211-985-11	s	RESISTOR,CHIP 47 1/10W (1608)
R234	1-211-985-11	s	RESISTOR,CHIP 47 1/10W (1608)
R235	1-211-985-11	s	RESISTOR,CHIP 47 1/10W (1608)
R236	1-211-985-11	s	RESISTOR,CHIP 47 1/10W (1608)
R237	1-211-985-11	s	RESISTOR,CHIP 47 1/10W (1608)
R238	1-211-985-11	s	RESISTOR,CHIP 47 1/10W (1608)
R239	1-211-985-11	s	RESISTOR,CHIP 47 1/10W (1608)
R240	1-211-985-11	s	RESISTOR,CHIP 47 1/10W (1608)
R241	1-211-985-11	s	RESISTOR,CHIP 47 1/10W (1608)
R242	1-211-985-11	s	RESISTOR,CHIP 47 1/10W (1608)
R243	1-211-985-11	s	RESISTOR,CHIP 47 1/10W (1608)
R244	1-211-985-11	s	RESISTOR,CHIP 47 1/10W (1608)
R245	1-211-985-11	s	RESISTOR,CHIP 47 1/10W (1608)
R246	1-211-985-11	s	RESISTOR,CHIP 47 1/10W (1608)
R247	1-211-985-11	s	RESISTOR,CHIP 47 1/10W (1608)
R248	1-211-985-11	s	RESISTOR,CHIP 47 1/10W (1608)
R249	1-211-985-11	s	RESISTOR,CHIP 47 1/10W (1608)
R250	1-211-985-11	s	RESISTOR,CHIP 47 1/10W (1608)
R252	1-218-871-11	s	RESISTOR,CHIP 10K 1/10W (1608)
R253	1-211-985-11	s	RESISTOR,CHIP 47 1/10W (1608)
R254	1-218-835-11	s	RESISTOR,CHIP 330 1/10W (1608)
R255	1-218-847-11	s	RESISTOR, CHIP 1K 1/10W (1608)
R256	1-218-847-11	s	RESISTOR, CHIP 1K 1/10W (1608)
R258	1-211-985-11	s	RESISTOR,CHIP 47 1/10W (1608)
R259	1-211-985-11	s	RESISTOR,CHIP 47 1/10W (1608)
R260	1-211-985-11	s	RESISTOR,CHIP 47 1/10W (1608)
R261	1-211-985-11	s	RESISTOR,CHIP 47 1/10W (1608)
R262	1-211-985-11	s	RESISTOR,CHIP 47 1/10W (1608)
R263	1-218-847-11	s	RESISTOR, CHIP 1K 1/10W (1608)
R264	1-218-847-11	s	RESISTOR, CHIP 1K 1/10W (1608)
R265	1-218-835-11	s	RESISTOR,CHIP 330 1/10W (1608)
R266	1-218-835-11	s	RESISTOR,CHIP 330 1/10W (1608)
R267	1-218-835-11	s	RESISTOR,CHIP 330 1/10W (1608)
R268	1-218-863-11	s	RESISTOR,CHIP 4.7K 1/10W(1608)
R269	1-211-985-11	s	RESISTOR,CHIP 47 1/10W (1608)
R273	1-216-864-11	s	CONDUCTOR, CHIP (1608)
R300	1-218-883-11	s	RESISTOR,CHIP 33K 1/10W (1608)
R301	1-218-847-11	s	RESISTOR, CHIP 1K 1/10W (1608)
R302	1-211-985-11	s	RESISTOR,CHIP 47 1/10W (1608)
R303	1-211-985-11	s	RESISTOR,CHIP 47 1/10W (1608)
R310	1-216-864-11	s	CONDUCTOR, CHIP (1608)
R313	1-216-864-11	s	CONDUCTOR, CHIP (1608)

(HIF-1A BOARD [SUFFIX 24-] for HDW PLAYER)

Ref. No. or Q'ty	Part No.	SP	Description
R500	1-216-864-11	s	CONDUCTOR, CHIP (1608)
R503	1-216-864-11	s	CONDUCTOR, CHIP (1608)
R504	1-216-864-11	s	CONDUCTOR, CHIP (1608)
R600	1-218-871-11	s	RESISTOR,CHIP 10K 1/10W (1608)
R601	1-218-871-11	s	RESISTOR,CHIP 10K 1/10W (1608)
R602	1-218-871-11	s	RESISTOR,CHIP 10K 1/10W (1608)
R603	1-218-871-11	s	RESISTOR,CHIP 10K 1/10W (1608)
R604	1-218-871-11	s	RESISTOR,CHIP 10K 1/10W (1608)
R605	1-218-871-11	s	RESISTOR,CHIP 10K 1/10W (1608)
R606	1-218-871-11	s	RESISTOR,CHIP 10K 1/10W (1608)
R607	1-218-871-11	s	RESISTOR,CHIP 10K 1/10W (1608)
R608	1-218-871-11	s	RESISTOR,CHIP 10K 1/10W (1608)
R609	1-218-871-11	s	RESISTOR,CHIP 10K 1/10W (1608)
R610	1-218-871-11	s	RESISTOR,CHIP 10K 1/10W (1608)
R611	1-218-871-11	s	RESISTOR,CHIP 10K 1/10W (1608)
R612	1-218-871-11	s	RESISTOR,CHIP 10K 1/10W (1608)
R613	1-218-871-11	s	RESISTOR,CHIP 10K 1/10W (1608)
R614	1-218-871-11	s	RESISTOR,CHIP 10K 1/10W (1608)
R615	1-218-871-11	s	RESISTOR,CHIP 10K 1/10W (1608)
R616	1-218-871-11	s	RESISTOR,CHIP 10K 1/10W (1608)
R617	1-218-871-11	s	RESISTOR,CHIP 10K 1/10W (1608)
R618	1-218-871-11	s	RESISTOR,CHIP 10K 1/10W (1608)
R619	1-218-871-11	s	RESISTOR,CHIP 10K 1/10W (1608)
R620	1-211-985-11	s	RESISTOR,CHIP 47 1/10W (1608)
R621	1-211-985-11	s	RESISTOR,CHIP 47 1/10W (1608)
R622	1-211-985-11	s	RESISTOR,CHIP 47 1/10W (1608)
R623	1-211-985-11	s	RESISTOR,CHIP 47 1/10W (1608)
R624	1-211-985-11	s	RESISTOR,CHIP 47 1/10W (1608)
R625	1-211-985-11	s	RESISTOR,CHIP 47 1/10W (1608)
R626	1-211-985-11	s	RESISTOR,CHIP 47 1/10W (1608)
R627	1-218-831-11	s	RESISTOR, CHIP 220 1/10W(1608)
R628	1-218-831-11	s	RESISTOR, CHIP 220 1/10W(1608)
R704	1-218-831-11	s	RESISTOR, CHIP 220 1/10W(1608)
R705	1-218-831-11	s	RESISTOR, CHIP 220 1/10W(1608)
R706	1-218-851-11	s	RESISTOR,CHIP 1.5K 1/10W(1608)
R707	1-218-847-11	s	RESISTOR, CHIP 1K 1/10W (1608)
R708	1-218-863-11	s	RESISTOR,CHIP 4.7K 1/10W(1608)
R711	1-211-985-11	s	RESISTOR,CHIP 47 1/10W (1608)
R712	1-211-985-11	s	RESISTOR,CHIP 47 1/10W (1608)
R713	1-211-985-11	s	RESISTOR,CHIP 47 1/10W (1608)
R714	1-211-985-11	s	RESISTOR,CHIP 47 1/10W (1608)
R716	1-216-864-11	s	CONDUCTOR, CHIP (1608)
R717	1-216-864-11	s	CONDUCTOR, CHIP (1608)
R718	1-216-864-11	s	CONDUCTOR, CHIP (1608)
R719	1-218-863-11	s	RESISTOR,CHIP 4.7K 1/10W(1608)
R720	1-216-864-11	s	CONDUCTOR, CHIP (1608)
R721	1-216-864-11	s	CONDUCTOR, CHIP (1608)
R722	1-216-864-11	s	CONDUCTOR, CHIP (1608)
R723	1-216-864-11	s	CONDUCTOR, CHIP (1608)
R724	1-216-864-11	s	CONDUCTOR, CHIP (1608)
R725	1-216-864-11	s	CONDUCTOR, CHIP (1608)
R726	1-216-864-11	s	CONDUCTOR, CHIP (1608)
R727	1-216-864-11	s	CONDUCTOR, CHIP (1608)
R728	1-216-864-11	s	CONDUCTOR, CHIP (1608)
R729	1-218-857-11	s	RESISTOR,CHIP 2.7K 1/10W(1608)
R733	1-211-985-11	s	RESISTOR,CHIP 47 1/10W (1608)
R734	1-211-985-11	s	RESISTOR,CHIP 47 1/10W (1608)
R735	1-211-985-11	s	RESISTOR,CHIP 47 1/10W (1608)
R736	1-211-985-11	s	RESISTOR,CHIP 47 1/10W (1608)

(HIF-1A BOARD [SUFFIX 24-] for HDW PLAYER)

Ref. No. or Q'ty	Part No.	SP	Description
R737	1-211-985-11	s	RESISTOR,CHIP 47 1/10W (1608)
R738	1-211-985-11	s	RESISTOR,CHIP 47 1/10W (1608)
R739	1-211-985-11	s	RESISTOR,CHIP 47 1/10W (1608)
R740	1-211-985-11	s	RESISTOR,CHIP 47 1/10W (1608)
R743	1-211-985-11	s	RESISTOR,CHIP 47 1/10W (1608)
R744	1-211-985-11	s	RESISTOR,CHIP 47 1/10W (1608)
R745	1-211-985-11	s	RESISTOR,CHIP 47 1/10W (1608)
R746	1-211-985-11	s	RESISTOR,CHIP 47 1/10W (1608)
R747	1-211-985-11	s	RESISTOR,CHIP 47 1/10W (1608)
R750	1-211-985-11	s	RESISTOR,CHIP 47 1/10W (1608)
R753	1-211-985-11	s	RESISTOR,CHIP 47 1/10W (1608)
R754	1-211-985-11	s	RESISTOR,CHIP 47 1/10W (1608)
R755	1-211-985-11	s	RESISTOR,CHIP 47 1/10W (1608)
R756	1-218-847-11	s	RESISTOR, CHIP 1K 1/10W (1608)
R757	1-218-847-11	s	RESISTOR, CHIP 1K 1/10W (1608)
R758	1-218-847-11	s	RESISTOR, CHIP 1K 1/10W (1608)
R759	1-211-977-11	s	RESISTOR,CHIP 22 1/10W (1608)
R760	1-211-977-11	s	RESISTOR,CHIP 22 1/10W (1608)
R761	1-211-977-11	s	RESISTOR,CHIP 22 1/10W (1608)
R762	1-211-977-11	s	RESISTOR,CHIP 22 1/10W (1608)
R763	1-211-977-11	s	RESISTOR,CHIP 22 1/10W (1608)
R764	1-211-977-11	s	RESISTOR,CHIP 22 1/10W (1608)
R765	1-211-977-11	s	RESISTOR,CHIP 22 1/10W (1608)
R766	1-211-977-11	s	RESISTOR,CHIP 22 1/10W (1608)
R767	1-211-977-11	s	RESISTOR,CHIP 22 1/10W (1608)
R768	1-211-977-11	s	RESISTOR,CHIP 22 1/10W (1608)
R770	1-218-895-11	s	RESISTOR,CHIP 100K 1/10W(1608)
R771	1-218-847-11	s	RESISTOR, CHIP 1K 1/10W (1608)
R772	1-218-871-11	s	RESISTOR,CHIP 10K 1/10W (1608)
R773	1-211-985-11	s	RESISTOR,CHIP 47 1/10W (1608)
R774	1-211-985-11	s	RESISTOR,CHIP 47 1/10W (1608)
R781	1-218-863-11	s	RESISTOR,CHIP 4.7K 1/10W(1608)
R782	1-216-864-11	s	CONDUCTOR, CHIP (1608)
R784	1-211-985-11	s	RESISTOR,CHIP 47 1/10W (1608)
R788	1-218-847-11	s	RESISTOR, CHIP 1K 1/10W (1608)
R789	1-218-847-11	s	RESISTOR, CHIP 1K 1/10W (1608)
R790	1-218-831-11	s	RESISTOR, CHIP 220 1/10W(1608)
R791	1-211-985-11	s	RESISTOR,CHIP 47 1/10W (1608)
R793	1-211-977-11	s	RESISTOR,CHIP 22 1/10W (1608)
R796	1-218-863-11	s	RESISTOR,CHIP 4.7K 1/10W(1608)
R800	1-218-847-11	s	RESISTOR, CHIP 1K 1/10W (1608)
R801	1-218-847-11	s	RESISTOR, CHIP 1K 1/10W (1608)
R802	1-216-864-11	s	CONDUCTOR, CHIP (1608)
R803	1-216-864-11	s	CONDUCTOR, CHIP (1608)
R804	1-216-864-11	s	CONDUCTOR, CHIP (1608)
R805	1-218-847-11	s	RESISTOR, CHIP 1K 1/10W (1608)
R806	1-218-847-11	s	RESISTOR, CHIP 1K 1/10W (1608)
R807	1-218-847-11	s	RESISTOR, CHIP 1K 1/10W (1608)
R808	1-218-847-11	s	RESISTOR, CHIP 1K 1/10W (1608)
R809	1-218-847-11	s	RESISTOR, CHIP 1K 1/10W (1608)
R810	1-218-847-11	s	RESISTOR, CHIP 1K 1/10W (1608)
R811	1-211-985-11	s	RESISTOR,CHIP 47 1/10W (1608)
R812	1-218-847-11	s	RESISTOR, CHIP 1K 1/10W (1608)
R813	1-211-977-11	s	RESISTOR,CHIP 22 1/10W (1608)
R814	1-218-839-11	s	RESISTOR,CHIP 470 1/10W (1608)
R815	1-218-839-11	s	RESISTOR,CHIP 470 1/10W (1608)
R816	1-218-847-11	s	RESISTOR, CHIP 1K 1/10W (1608)
R817	1-218-832-11	s	RESISTOR,CHIP 240 1/10W (1608)
R818	1-218-856-11	s	RESISTOR,CHIP 2.4K 1/10W(1608)

(HIF-1A BOARD [SUFFIX 24-] for HDW PLAYER)

Ref. No. or Q'ty	Part No.	SP	Description
R819	1-218-847-11	s	RESISTOR, CHIP 1K 1/10W (1608)
R820	1-218-827-11	s	RESISTOR,CHIP 150 1/10W (1608)
R821	1-218-827-11	s	RESISTOR,CHIP 150 1/10W (1608)
R824	1-218-879-11	s	RESISTOR,CHIP 22K 1/10W (1608)
R825	1-218-855-11	s	RESISTOR,CHIP 2.2K 1/10W(1608)
R826	1-218-865-11	s	RESISTOR,CHIP 5.6K 1/10W(1608)
R827	1-218-871-11	s	RESISTOR,CHIP 10K 1/10W (1608)
R828	1-216-863-11	s	RESISTOR,CHIP 3.3M 1/16W 1608
R829	1-218-827-11	s	RESISTOR,CHIP 150 1/10W (1608)
R830	1-218-827-11	s	RESISTOR,CHIP 150 1/10W (1608)
R831	1-218-855-11	s	RESISTOR,CHIP 2.2K 1/10W(1608)
R832	1-218-847-11	s	RESISTOR, CHIP 1K 1/10W (1608)
R833	1-218-847-11	s	RESISTOR, CHIP 1K 1/10W (1608)
R834	1-218-823-11	s	RESISTOR,CHIP 100 1/10W (1608)
R835	1-218-859-11	s	RESISTOR,CHIP 3.3K 1/10W(1608)
R836	1-218-823-11	s	RESISTOR,CHIP 100 1/10W (1608)
R837	1-218-855-11	s	RESISTOR,CHIP 2.2K 1/10W(1608)
R838	1-218-823-11	s	RESISTOR,CHIP 100 1/10W (1608)
R839	1-218-863-11	s	RESISTOR,CHIP 4.7K 1/10W(1608)
R840	1-218-858-11	s	RESISTOR, CHIP 3K 1/10W (1608)
R841	1-218-847-11	s	RESISTOR, CHIP 1K 1/10W (1608)
R842	1-218-847-11	s	RESISTOR, CHIP 1K 1/10W (1608)
R843	1-218-847-11	s	RESISTOR, CHIP 1K 1/10W (1608)
R844	1-218-847-11	s	RESISTOR, CHIP 1K 1/10W (1608)
R845	1-216-864-11	s	CONDUCTOR, CHIP (1608)
R847	1-218-895-11	s	RESISTOR,CHIP 100K 1/10W(1608)
R848	1-218-895-11	s	RESISTOR,CHIP 100K 1/10W(1608)
R849	1-218-895-11	s	RESISTOR,CHIP 100K 1/10W(1608)
R850	1-218-871-11	s	RESISTOR,CHIP 10K 1/10W (1608)
R851	1-218-871-11	s	RESISTOR,CHIP 10K 1/10W (1608)
R852	1-218-871-11	s	RESISTOR,CHIP 10K 1/10W (1608)
R853	1-218-903-11	s	RESISTOR,CHIP 220K 1/10W(1608)
R854	1-218-871-11	s	RESISTOR,CHIP 10K 1/10W (1608)
R855	1-218-871-11	s	RESISTOR,CHIP 10K 1/10W (1608)
R857	1-218-871-11	s	RESISTOR,CHIP 10K 1/10W (1608)
R858	1-218-871-11	s	RESISTOR,CHIP 10K 1/10W (1608)
R859	1-218-831-11	s	RESISTOR, CHIP 220 1/10W(1608)
R860	1-218-839-11	s	RESISTOR,CHIP 470 1/10W (1608)
R861	1-218-839-11	s	RESISTOR,CHIP 470 1/10W (1608)
R862	1-211-985-11	s	RESISTOR,CHIP 47 1/10W (1608)
R863	1-211-985-11	s	RESISTOR,CHIP 47 1/10W (1608)
R864	1-211-985-11	s	RESISTOR,CHIP 47 1/10W (1608)
R865	1-211-985-11	s	RESISTOR,CHIP 47 1/10W (1608)
R866	1-211-985-11	s	RESISTOR,CHIP 47 1/10W (1608)
R867	1-211-985-11	s	RESISTOR,CHIP 47 1/10W (1608)
R868	1-211-985-11	s	RESISTOR,CHIP 47 1/10W (1608)
R869	1-211-985-11	s	RESISTOR,CHIP 47 1/10W (1608)
R900	1-218-847-11	s	RESISTOR, CHIP 1K 1/10W (1608)
R901	1-218-823-11	s	RESISTOR,CHIP 100 1/10W (1608)
R902	1-218-847-11	s	RESISTOR, CHIP 1K 1/10W (1608)
R903	1-218-847-11	s	RESISTOR, CHIP 1K 1/10W (1608)
R904	1-211-969-11	s	RESISTOR,CHIP 10 1/10W (1608)
R905	1-211-969-11	s	RESISTOR,CHIP 10 1/10W (1608)
R908	1-218-863-11	s	RESISTOR,CHIP 4.7K 1/10W(1608)
R909	1-218-863-11	s	RESISTOR,CHIP 4.7K 1/10W(1608)
R910	1-218-895-11	s	RESISTOR,CHIP 100K 1/10W(1608)
R911	1-218-895-11	s	RESISTOR,CHIP 100K 1/10W(1608)
R912	1-218-895-11	s	RESISTOR,CHIP 100K 1/10W(1608)
R913	1-211-985-11	s	RESISTOR,CHIP 47 1/10W (1608)

(HIF-1A BOARD [SUFFIX 24-] for HDW PLAYER)

Ref. No. or Q'ty	Part No.	SP	Description
R915	1-218-895-11	s	RESISTOR,CHIP 100K 1/10W(1608)
R916	1-218-895-11	s	RESISTOR,CHIP 100K 1/10W(1608)
R917	1-211-985-11	s	RESISTOR,CHIP 47 1/10W (1608)
R918	1-211-985-11	s	RESISTOR,CHIP 47 1/10W (1608)
R924	1-216-864-11	s	CONDUCTOR, CHIP (1608)
R925	1-216-864-11	s	CONDUCTOR, CHIP (1608)
R926	1-216-864-11	s	CONDUCTOR, CHIP (1608)
R927	1-218-895-11	s	RESISTOR,CHIP 100K 1/10W(1608)
R928	1-211-985-11	s	RESISTOR,CHIP 47 1/10W (1608)
R929	1-211-985-11	s	RESISTOR,CHIP 47 1/10W (1608)
R936	1-211-969-11	s	RESISTOR,CHIP 10 1/10W (1608)
R940	1-211-985-11	s	RESISTOR,CHIP 47 1/10W (1608)
R941	1-211-985-11	s	RESISTOR,CHIP 47 1/10W (1608)
R942	1-211-985-11	s	RESISTOR,CHIP 47 1/10W (1608)
R943	1-211-985-11	s	RESISTOR,CHIP 47 1/10W (1608)
R944	1-218-895-11	s	RESISTOR,CHIP 100K 1/10W(1608)
R945	1-211-985-11	s	RESISTOR,CHIP 47 1/10W (1608)
R946	1-211-969-11	s	RESISTOR,CHIP 10 1/10W (1608)
R947	1-211-969-11	s	RESISTOR,CHIP 10 1/10W (1608)
R948	1-211-969-11	s	RESISTOR,CHIP 10 1/10W (1608)
R949	1-211-985-11	s	RESISTOR,CHIP 47 1/10W (1608)
R950	1-211-985-11	s	RESISTOR,CHIP 47 1/10W (1608)
R951	1-211-985-11	s	RESISTOR,CHIP 47 1/10W (1608)
R952	1-211-985-11	s	RESISTOR,CHIP 47 1/10W (1608)
R953	1-218-823-11	s	RESISTOR,CHIP 100 1/10W (1608)
R954	1-218-823-11	s	RESISTOR,CHIP 100 1/10W (1608)
R955	1-211-985-11	s	RESISTOR,CHIP 47 1/10W (1608)
R956	1-211-985-11	s	RESISTOR,CHIP 47 1/10W (1608)
R957	1-211-985-11	s	RESISTOR,CHIP 47 1/10W (1608)
R962	1-211-985-11	s	RESISTOR,CHIP 47 1/10W (1608)
R963	1-211-985-11	s	RESISTOR,CHIP 47 1/10W (1608)
R964	1-211-969-11	s	RESISTOR,CHIP 10 1/10W (1608)
R965	1-211-985-11	s	RESISTOR,CHIP 47 1/10W (1608)
R981	1-218-835-11	s	RESISTOR,CHIP 330 1/10W (1608)
R982	1-218-863-11	s	RESISTOR,CHIP 4.7K 1/10W(1608)
R990	1-218-847-11	s	RESISTOR, CHIP 1K 1/10W (1608)
R1000	1-219-610-11	s	RESISTOR, (SQUARE TYPE) 0.022
R1003	1-211-969-11	s	RESISTOR,CHIP 10 1/10W (1608)
R1004	1-211-969-11	s	RESISTOR,CHIP 10 1/10W (1608)
R1005	1-218-880-11	s	RESISTOR,CHIP 24K 1/10W (1608)
R1006	1-218-877-11	s	RESISTOR,CHIP 18K 1/10W (1608)
R1007	1-211-985-11	s	RESISTOR,CHIP 47 1/10W (1608)
R1008	1-211-985-11	s	RESISTOR,CHIP 47 1/10W (1608)
R1009	1-218-863-11	s	RESISTOR,CHIP 4.7K 1/10W(1608)
R1016	1-218-823-11	s	RESISTOR,CHIP 100 1/10W (1608)
R1021	1-218-863-11	s	RESISTOR,CHIP 4.7K 1/10W(1608)
R1022	1-218-871-11	s	RESISTOR,CHIP 10K 1/10W (1608)
R1023	1-218-871-11	s	RESISTOR,CHIP 10K 1/10W (1608)
R1026	1-211-969-11	s	RESISTOR,CHIP 10 1/10W (1608)
R1027	1-211-969-11	s	RESISTOR,CHIP 10 1/10W (1608)
R1028	1-219-610-11	s	RESISTOR, (SQUARE TYPE) 0.022
R1708	1-211-977-11	s	RESISTOR,CHIP 22 1/10W (1608)
R1709	1-211-977-11	s	RESISTOR,CHIP 22 1/10W (1608)
R1710	1-211-977-11	s	RESISTOR,CHIP 22 1/10W (1608)
R1711	1-211-977-11	s	RESISTOR,CHIP 22 1/10W (1608)
R1712	1-211-977-11	s	RESISTOR,CHIP 22 1/10W (1608)
R1714	1-211-977-11	s	RESISTOR,CHIP 22 1/10W (1608)
R1716	1-211-977-11	s	RESISTOR,CHIP 22 1/10W (1608)
R1717	1-211-977-11	s	RESISTOR,CHIP 22 1/10W (1608)

(HIF-1A BOARD [SUFFIX 24-] for HDW PLAYER)

Ref. No. or Q'ty	Part No.	SP	Description
R1718	1-211-985-11	s	RESISTOR,CHIP 47 1/10W (1608)
R1719	1-211-985-11	s	RESISTOR,CHIP 47 1/10W (1608)
R1720	1-211-985-11	s	RESISTOR,CHIP 47 1/10W (1608)
R1721	1-211-985-11	s	RESISTOR,CHIP 47 1/10W (1608)
R1722	1-211-985-11	s	RESISTOR,CHIP 47 1/10W (1608)
R1729	1-211-977-11	s	RESISTOR,CHIP 22 1/10W (1608)
R1738	1-218-831-11	s	RESISTOR, CHIP 220 1/10W(1608)
R1740	1-216-864-11	s	CONDUCTOR, CHIP (1608)
RB113	1-239-409-11	s	RESISTOR NETWORK 47 (1608)
RB114	1-239-409-11	s	RESISTOR NETWORK 47 (1608)
RB115	1-239-409-11	s	RESISTOR NETWORK 47 (1608)
RB116	1-239-409-11	s	RESISTOR NETWORK 47 (1608)
RB117	1-239-409-11	s	RESISTOR NETWORK 47 (1608)
RB118	1-239-409-11	s	RESISTOR NETWORK 47 (1608)
RB119	1-233-411-11	s	RESISTOR,CHIP NETWORK 220/3216
RB120	1-233-411-11	s	RESISTOR,CHIP NETWORK 220/3216
RB121	1-233-411-11	s	RESISTOR,CHIP NETWORK 220/3216
RB122	1-233-411-11	s	RESISTOR,CHIP NETWORK 220/3216
RB123	1-233-411-11	s	RESISTOR,CHIP NETWORK 220/3216
RB124	1-233-411-11	s	RESISTOR,CHIP NETWORK 220/3216
RB125	1-239-409-11	s	RESISTOR NETWORK 47 (1608)
RB126	1-239-409-11	s	RESISTOR NETWORK 47 (1608)
RB127	1-239-409-11	s	RESISTOR NETWORK 47 (1608)
RB128	1-239-409-11	s	RESISTOR NETWORK 47 (1608)
RB129	1-239-409-11	s	RESISTOR NETWORK 47 (1608)
RB130	1-239-409-11	s	RESISTOR NETWORK 47 (1608)
RB204	1-239-409-11	s	RESISTOR NETWORK 47 (1608)
RB205	1-239-409-11	s	RESISTOR NETWORK 47 (1608)
RB206	1-239-409-11	s	RESISTOR NETWORK 47 (1608)
RB207	1-239-409-11	s	RESISTOR NETWORK 47 (1608)
RB208	1-239-409-11	s	RESISTOR NETWORK 47 (1608)
RB209	1-239-409-11	s	RESISTOR NETWORK 47 (1608)
RB210	1-239-409-11	s	RESISTOR NETWORK 47 (1608)
RB211	1-239-409-11	s	RESISTOR NETWORK 47 (1608)
RB216	1-239-409-11	s	RESISTOR NETWORK 47 (1608)
RB217	1-239-409-11	s	RESISTOR NETWORK 47 (1608)
RB218	1-239-409-11	s	RESISTOR NETWORK 47 (1608)
RB219	1-239-409-11	s	RESISTOR NETWORK 47 (1608)
RB220	1-239-409-11	s	RESISTOR NETWORK 47 (1608)
RB221	1-239-409-11	s	RESISTOR NETWORK 47 (1608)
RB222	1-239-409-11	s	RESISTOR NETWORK 47 (1608)
RB223	1-239-409-11	s	RESISTOR NETWORK 47 (1608)
RB224	1-236-908-11	s	RESISTOR,NETWORK 10K (3216)
RB300	1-239-409-11	s	RESISTOR NETWORK 47 (1608)
RB301	1-239-409-11	s	RESISTOR NETWORK 47 (1608)
RB302	1-239-409-11	s	RESISTOR NETWORK 47 (1608)
RB303	1-239-409-11	s	RESISTOR NETWORK 47 (1608)
RB304	1-239-409-11	s	RESISTOR NETWORK 47 (1608)
RB309	1-239-409-11	s	RESISTOR NETWORK 47 (1608)
RB505	1-233-575-11	s	RES, CHIP NETWORK 22
RB506	1-233-575-11	s	RES, CHIP NETWORK 22
RB507	1-233-575-11	s	RES, CHIP NETWORK 22
RB508	1-233-575-11	s	RES, CHIP NETWORK 22
RB509	1-233-575-11	s	RES, CHIP NETWORK 22
RB510	1-233-575-11	s	RES, CHIP NETWORK 22
RB511	1-233-575-11	s	RES, CHIP NETWORK 22
RB512	1-233-575-11	s	RES, CHIP NETWORK 22
RB513	1-233-575-11	s	RES, CHIP NETWORK 22

(HIF-1A BOARD [SUFFIX 24-] for HDW PLAYER)

Ref. No. or Q'ty	Part No.	SP	Description
RB514	1-233-575-11	s	RES, CHIP NETWORK 22
RB515	1-233-575-11	s	RES, CHIP NETWORK 22
RB516	1-233-575-11	s	RES, CHIP NETWORK 22
RB600	1-239-409-11	s	RESISTOR NETWORK 47 (1608)
RB601	1-239-409-11	s	RESISTOR NETWORK 47 (1608)
RB602	1-239-409-11	s	RESISTOR NETWORK 47 (1608)
RB603	1-239-409-11	s	RESISTOR NETWORK 47 (1608)
RB604	1-233-575-11	s	RES, CHIP NETWORK 22
RB605	1-233-575-11	s	RES, CHIP NETWORK 22
RB606	1-233-575-11	s	RES, CHIP NETWORK 22
RB607	1-233-575-11	s	RES, CHIP NETWORK 22
RB608	1-233-575-11	s	RES, CHIP NETWORK 22
RB609	1-233-575-11	s	RES, CHIP NETWORK 22
RB700	1-233-810-21	s	RES, NETWORK 100K (3216)
RB701	1-239-409-11	s	RESISTOR NETWORK 47 (1608)
RB702	1-239-409-11	s	RESISTOR NETWORK 47 (1608)
RB703	1-233-575-11	s	RES, CHIP NETWORK 22
RB704	1-233-575-11	s	RES, CHIP NETWORK 22
RB705	1-233-575-11	s	RES, CHIP NETWORK 22
RB706	1-233-575-11	s	RES, CHIP NETWORK 22
RB900	1-233-810-21	s	RES, NETWORK 100K (3216)
RB901	1-233-810-21	s	RES, NETWORK 100K (3216)
RB902	1-233-810-21	s	RES, NETWORK 100K (3216)
RB903	1-233-810-21	s	RES, NETWORK 100K (3216)
RB904	1-233-810-21	s	RES, NETWORK 100K (3216)
RB905	1-233-810-21	s	RES, NETWORK 100K (3216)
RB906	1-233-810-21	s	RES, NETWORK 100K (3216)
RB907	1-233-412-11	s	RESISTOR,CHIP NETWORK 1K
RB908	1-239-409-11	s	RESISTOR NETWORK 47 (1608)
RB909	1-239-409-11	s	RESISTOR NETWORK 47 (1608)
RB910	1-239-409-11	s	RESISTOR NETWORK 47 (1608)
RB911	1-239-409-11	s	RESISTOR NETWORK 47 (1608)
RB912	1-239-409-11	s	RESISTOR NETWORK 47 (1608)
RB913	1-239-409-11	s	RESISTOR NETWORK 47 (1608)
RB914	1-239-409-11	s	RESISTOR NETWORK 47 (1608)
RB915	1-233-412-11	s	RESISTOR,CHIP NETWORK 1K
RB916	1-233-412-11	s	RESISTOR,CHIP NETWORK 1K
RB917	1-239-409-11	s	RESISTOR NETWORK 47 (1608)
RB918	1-233-414-11	s	RESISTOR,CHIP NETWORK 4.7K
RB919	1-233-414-11	s	RESISTOR,CHIP NETWORK 4.7K
RB920	1-233-414-11	s	RESISTOR,CHIP NETWORK 4.7K
RB921	1-233-414-11	s	RESISTOR,CHIP NETWORK 4.7K
RB922	1-233-810-21	s	RES, NETWORK 100K (3216)
RB923	1-233-810-21	s	RES, NETWORK 100K (3216)
RB924	1-233-810-21	s	RES, NETWORK 100K (3216)
RB925	1-233-414-11	s	RESISTOR,CHIP NETWORK 4.7K
RB926	1-233-414-11	s	RESISTOR,CHIP NETWORK 4.7K
RB927	1-239-409-11	s	RESISTOR NETWORK 47 (1608)
RB928	1-239-409-11	s	RESISTOR NETWORK 47 (1608)
RB929	1-239-409-11	s	RESISTOR NETWORK 47 (1608)
RB930	1-239-409-11	s	RESISTOR NETWORK 47 (1608)
RB931	1-233-810-21	s	RES, NETWORK 100K (3216)
RB932	1-239-409-11	s	RESISTOR NETWORK 47 (1608)
RB933	1-239-409-11	s	RESISTOR NETWORK 47 (1608)
RB934	1-239-409-11	s	RESISTOR NETWORK 47 (1608)
RB935	1-239-409-11	s	RESISTOR NETWORK 47 (1608)
RB936	1-239-409-11	s	RESISTOR NETWORK 47 (1608)
RB937	1-239-409-11	s	RESISTOR NETWORK 47 (1608)
RB938	1-239-409-11	s	RESISTOR NETWORK 47 (1608)

(HIF-1A BOARD [SUFFIX 24-] for HDW PLAYER)

Ref. No. or Q'ty	Part No.	SP	Description
RB939	1-239-409-11	s	RESISTOR NETWORK 47 (1608)
RB940	1-239-409-11	s	RESISTOR NETWORK 47 (1608)
RB941	1-233-412-11	s	RESISTOR,CHIP NETWORK 1K
RB942	1-233-412-11	s	RESISTOR,CHIP NETWORK 1K
RB943	1-233-412-11	s	RESISTOR,CHIP NETWORK 1K
RB944	1-233-412-11	s	RESISTOR,CHIP NETWORK 1K
RB945	1-233-412-11	s	RESISTOR,CHIP NETWORK 1K
RB946	1-233-412-11	s	RESISTOR,CHIP NETWORK 1K
RB947	1-239-409-11	s	RESISTOR NETWORK 47 (1608)
RB948	1-239-409-11	s	RESISTOR NETWORK 47 (1608)
RB949	1-239-409-11	s	RESISTOR NETWORK 47 (1608)
RB950	1-233-412-11	s	RESISTOR,CHIP NETWORK 1K
RB951	1-239-409-11	s	RESISTOR NETWORK 47 (1608)
RB952	1-239-409-11	s	RESISTOR NETWORK 47 (1608)
RB963	1-239-409-11	s	RESISTOR NETWORK 47 (1608)
RB966	1-239-409-11	s	RESISTOR NETWORK 47 (1608)
RB967	1-239-409-11	s	RESISTOR NETWORK 47 (1608)
RB968	1-239-409-11	s	RESISTOR NETWORK 47 (1608)
RB969	1-239-409-11	s	RESISTOR NETWORK 47 (1608)
RB977	1-239-409-11	s	RESISTOR NETWORK 47 (1608)
RB979	1-239-409-11	s	RESISTOR NETWORK 47 (1608)
RB980	1-236-908-11	s	RESISTOR,NETWORK 10K (3216)
RB1100	1-233-575-11	s	RES, CHIP NETWORK 22
RB1101	1-233-575-11	s	RES, CHIP NETWORK 22
RB1102	1-233-575-11	s	RES, CHIP NETWORK 22
RB1103	1-233-575-11	s	RES, CHIP NETWORK 22
RB1104	1-233-412-11	s	RESISTOR,CHIP NETWORK 1K
RB1105	1-233-412-11	s	RESISTOR,CHIP NETWORK 1K
RB1106	1-239-409-11	s	RESISTOR NETWORK 47 (1608)
RB1107	1-239-409-11	s	RESISTOR NETWORK 47 (1608)
RB1108	1-239-409-11	s	RESISTOR NETWORK 47 (1608)
RB1109	1-239-409-11	s	RESISTOR NETWORK 47 (1608)
RB1110	1-239-409-11	s	RESISTOR NETWORK 47 (1608)
RB1111	1-233-575-11	s	RES, CHIP NETWORK 22
RB1112	1-233-575-11	s	RES, CHIP NETWORK 22
RB1113	1-233-575-11	s	RES, CHIP NETWORK 22
RV800	1-241-261-41	s	RESISTOR, ADJ, CERMET 1K
RV801	1-241-261-41	s	RESISTOR, ADJ, CERMET 1K
S900	1-692-270-41	s	SWITCH, SLIDE
TP200	1-535-877-22	s	CHIP,CHECKER (TEST POINT)
TP201	1-535-877-22	s	CHIP,CHECKER (TEST POINT)
TP600	1-535-877-22	s	CHIP,CHECKER (TEST POINT)
TP601	1-535-877-22	s	CHIP,CHECKER (TEST POINT)
TP700	1-535-877-22	s	CHIP,CHECKER (TEST POINT)
TP701	1-535-877-22	s	CHIP,CHECKER (TEST POINT)
TP702	1-535-877-22	s	CHIP,CHECKER (TEST POINT)
TP704	1-535-877-22	s	CHIP,CHECKER (TEST POINT)
TP705	1-535-877-22	s	CHIP,CHECKER (TEST POINT)
TP800	1-535-877-22	s	CHIP,CHECKER (TEST POINT)
X800	1-795-677-11	s	OSCILLATOR, CRYSTAL
X801	1-795-676-11	s	OSCILLATOR, CRYSTAL
X802	1-813-002-11	s	OSCILLATOR, CRYSTAL
X803	1-813-001-11	s	OSCILLATOR, CRYSTAL
X804	1-795-671-11	s	OSCILLATOR, CRYSTAL
X805	1-795-670-11	s	OSCILLATOR, CRYSTAL

HIF-1B BOARD [SUFFIX 22, 23] for BKMW-104

[Lot No. 2B3 - 3B4]

*1: [SUFFIX 22]
*2: [SUFFIX 23]

Ref. No. or Q'ty	Part No.	SP	Description
1pc	3-629-706-03	o	COVER,SHIELD HIF
1pc	3-701-822-00	s	HOLDER, WIRE
2pcs	7-621-772-18	s	SCREW +B M2X4
6pcs	7-682-902-11	s	SCREW +PWH 2.6X5
1pc	3-179-084-21	s	LEVER (R), PC BOARD
1pc	3-179-085-21	s	LEVER (L), PC BOARD
1pc	3-629-707-02	o	CASE,SHIELD HIF
C110	1-107-826-11	s	CAPACITOR,CHIP CERAMIC 0.1MF
C111	1-107-826-11	s	CAPACITOR,CHIP CERAMIC 0.1MF
C112	1-107-826-11	s	CAPACITOR,CHIP CERAMIC 0.1MF
C200	1-107-826-11	s	CAPACITOR,CHIP CERAMIC 0.1MF
C201	1-107-826-11	s	CAPACITOR,CHIP CERAMIC 0.1MF
C202	1-107-826-11	s	CAPACITOR,CHIP CERAMIC 0.1MF
C203	1-107-826-11	s	CAPACITOR,CHIP CERAMIC 0.1MF
C204	1-107-826-11	s	CAPACITOR,CHIP CERAMIC 0.1MF
C205	1-107-826-11	s	CAPACITOR,CHIP CERAMIC 0.1MF
C206	1-127-692-11	s	CAP, CHIP CERAMIC 10MF B 3216
C207	1-107-826-11	s	CAPACITOR,CHIP CERAMIC 0.1MF
C208	1-107-826-11	s	CAPACITOR,CHIP CERAMIC 0.1MF
C209	1-107-826-11	s	CAPACITOR,CHIP CERAMIC 0.1MF
C210	1-107-826-11	s	CAPACITOR,CHIP CERAMIC 0.1MF
C211	1-127-692-11	s	CAP, CHIP CERAMIC 10MF B 3216
C212	1-107-826-11	s	CAPACITOR,CHIP CERAMIC 0.1MF
C213	1-107-826-11	s	CAPACITOR,CHIP CERAMIC 0.1MF
C214	1-107-826-11	s	CAPACITOR,CHIP CERAMIC 0.1MF
C215	1-107-826-11	s	CAPACITOR,CHIP CERAMIC 0.1MF
C216	1-107-826-11	s	CAPACITOR,CHIP CERAMIC 0.1MF
C217	1-107-826-11	s	CAPACITOR,CHIP CERAMIC 0.1MF
C218	1-107-826-11	s	CAPACITOR,CHIP CERAMIC 0.1MF
C219	1-107-826-11	s	CAPACITOR,CHIP CERAMIC 0.1MF
C220	1-107-826-11	s	CAPACITOR,CHIP CERAMIC 0.1MF
C221	1-107-826-11	s	CAPACITOR,CHIP CERAMIC 0.1MF
C222	1-107-826-11	s	CAPACITOR,CHIP CERAMIC 0.1MF
C223	1-107-826-11	s	CAPACITOR,CHIP CERAMIC 0.1MF
C226	1-127-692-11	s	CAP, CHIP CERAMIC 10MF B 3216
C227	1-125-889-11	s	CAPACITOR, C.CERAMIC 2.2MF
C228	1-125-889-11	s	CAPACITOR, C.CERAMIC 2.2MF
C229	1-107-826-11	s	CAPACITOR,CHIP CERAMIC 0.1MF
C300	1-107-826-11	s	CAPACITOR,CHIP CERAMIC 0.1MF
C301	1-107-826-11	s	CAPACITOR,CHIP CERAMIC 0.1MF
C302	1-107-826-11	s	CAPACITOR,CHIP CERAMIC 0.1MF
C303	1-107-826-11	s	CAPACITOR,CHIP CERAMIC 0.1MF
C304	1-107-826-11	s	CAPACITOR,CHIP CERAMIC 0.1MF
C305	1-107-826-11	s	CAPACITOR,CHIP CERAMIC 0.1MF
C306	1-107-826-11	s	CAPACITOR,CHIP CERAMIC 0.1MF
C307	1-107-826-11	s	CAPACITOR,CHIP CERAMIC 0.1MF
C308	1-107-826-11	s	CAPACITOR,CHIP CERAMIC 0.1MF
C309	1-107-826-11	s	CAPACITOR,CHIP CERAMIC 0.1MF
C310	1-107-826-11	s	CAPACITOR,CHIP CERAMIC 0.1MF
C311	1-107-826-11	s	CAPACITOR,CHIP CERAMIC 0.1MF
C312	1-107-826-11	s	CAPACITOR,CHIP CERAMIC 0.1MF
C313	1-107-826-11	s	CAPACITOR,CHIP CERAMIC 0.1MF
C314	1-107-826-11	s	CAPACITOR,CHIP CERAMIC 0.1MF
C315	1-107-826-11	s	CAPACITOR,CHIP CERAMIC 0.1MF
C316	1-107-826-11	s	CAPACITOR,CHIP CERAMIC 0.1MF

(HIF-1B BOARD [SUFFIX 22, 23] for BKMW-104)

Ref. No. or Q'ty	Part No.	SP	Description
C317	1-107-826-11	s	CAPACITOR,CHIP CERAMIC 0.1MF
C318	1-107-826-11	s	CAPACITOR,CHIP CERAMIC 0.1MF
C319	1-107-826-11	s	CAPACITOR,CHIP CERAMIC 0.1MF
C320	1-107-826-11	s	CAPACITOR,CHIP CERAMIC 0.1MF
C321	1-107-826-11	s	CAPACITOR,CHIP CERAMIC 0.1MF
C322	1-107-826-11	s	CAPACITOR,CHIP CERAMIC 0.1MF
C323	1-107-826-11	s	CAPACITOR,CHIP CERAMIC 0.1MF
C324	1-107-826-11	s	CAPACITOR,CHIP CERAMIC 0.1MF
C325	1-107-826-11	s	CAPACITOR,CHIP CERAMIC 0.1MF
C326	1-107-826-11	s	CAPACITOR,CHIP CERAMIC 0.1MF
C327	1-107-826-11	s	CAPACITOR,CHIP CERAMIC 0.1MF
C328	1-107-826-11	s	CAPACITOR,CHIP CERAMIC 0.1MF
C329	1-127-708-11	s	CAP, POLYPYRROLE 100MF
C330	1-127-708-11	s	CAP, POLYPYRROLE 100MF
C331	1-107-826-11	s	CAPACITOR,CHIP CERAMIC 0.1MF
C332	1-107-826-11	s	CAPACITOR,CHIP CERAMIC 0.1MF
C333	1-107-826-11	s	CAPACITOR,CHIP CERAMIC 0.1MF
C334	1-107-826-11	s	CAPACITOR,CHIP CERAMIC 0.1MF
C335	1-107-826-11	s	CAPACITOR,CHIP CERAMIC 0.1MF
C336	1-107-826-11	s	CAPACITOR,CHIP CERAMIC 0.1MF
C337	1-107-826-11	s	CAPACITOR,CHIP CERAMIC 0.1MF
C338	1-107-826-11	s	CAPACITOR,CHIP CERAMIC 0.1MF
C339	1-107-826-11	s	CAPACITOR,CHIP CERAMIC 0.1MF
C340	1-107-826-11	s	CAPACITOR,CHIP CERAMIC 0.1MF
C341	1-107-826-11	s	CAPACITOR,CHIP CERAMIC 0.1MF
C342	1-107-826-11	s	CAPACITOR,CHIP CERAMIC 0.1MF
C343	1-107-826-11	s	CAPACITOR,CHIP CERAMIC 0.1MF
C344	1-107-826-11	s	CAPACITOR,CHIP CERAMIC 0.1MF
C345	1-107-826-11	s	CAPACITOR,CHIP CERAMIC 0.1MF
C346	1-107-826-11	s	CAPACITOR,CHIP CERAMIC 0.1MF
C347	1-107-826-11	s	CAPACITOR,CHIP CERAMIC 0.1MF
C348	1-164-227-11	s	CAPACITOR,CERAMIC 0.022MF/25V
C400	1-107-826-11	s	CAPACITOR,CHIP CERAMIC 0.1MF
C401	1-107-826-11	s	CAPACITOR,CHIP CERAMIC 0.1MF
C402	1-107-826-11	s	CAPACITOR,CHIP CERAMIC 0.1MF
C406	1-107-826-11	s	CAPACITOR,CHIP CERAMIC 0.1MF
C407	1-107-826-11	s	CAPACITOR,CHIP CERAMIC 0.1MF
C408	1-107-826-11	s	CAPACITOR,CHIP CERAMIC 0.1MF
C409	1-107-826-11	s	CAPACITOR,CHIP CERAMIC 0.1MF
C410	1-107-826-11	s	CAPACITOR,CHIP CERAMIC 0.1MF
C411	1-107-826-11	s	CAPACITOR,CHIP CERAMIC 0.1MF
C412	1-107-826-11	s	CAPACITOR,CHIP CERAMIC 0.1MF
C413	1-107-826-11	s	CAPACITOR,CHIP CERAMIC 0.1MF
C414	1-107-826-11	s	CAPACITOR,CHIP CERAMIC 0.1MF
C415	1-107-826-11	s	CAPACITOR,CHIP CERAMIC 0.1MF
C416	1-107-826-11	s	CAPACITOR,CHIP CERAMIC 0.1MF
C417	1-107-826-11	s	CAPACITOR,CHIP CERAMIC 0.1MF
C418	1-107-826-11	s	CAPACITOR,CHIP CERAMIC 0.1MF
C419	1-107-826-11	s	CAPACITOR,CHIP CERAMIC 0.1MF
C420	1-107-826-11	s	CAPACITOR,CHIP CERAMIC 0.1MF
C421	1-107-826-11	s	CAPACITOR,CHIP CERAMIC 0.1MF
C422	1-107-826-11	s	CAPACITOR,CHIP CERAMIC 0.1MF
C423	1-107-826-11	s	CAPACITOR,CHIP CERAMIC 0.1MF
C424	1-107-826-11	s	CAPACITOR,CHIP CERAMIC 0.1MF
C425	1-107-826-11	s	CAPACITOR,CHIP CERAMIC 0.1MF
C426	1-107-826-11	s	CAPACITOR,CHIP CERAMIC 0.1MF
C427	1-107-826-11	s	CAPACITOR,CHIP CERAMIC 0.1MF
C428	1-107-826-11	s	CAPACITOR,CHIP CERAMIC 0.1MF
C429	1-107-826-11	s	CAPACITOR,CHIP CERAMIC 0.1MF

(HIF-1B BOARD [SUFFIX 22, 23] for BKMW-104)

Ref. No. or Q'ty	Part No.	SP	Description
C430	1-107-826-11	s	CAPACITOR,CHIP CERAMIC 0.1MF
C431	1-107-826-11	s	CAPACITOR,CHIP CERAMIC 0.1MF
C432	1-107-826-11	s	CAPACITOR,CHIP CERAMIC 0.1MF
C433	1-107-826-11	s	CAPACITOR,CHIP CERAMIC 0.1MF
C434	1-107-826-11	s	CAPACITOR,CHIP CERAMIC 0.1MF
C435	1-107-826-11	s	CAPACITOR,CHIP CERAMIC 0.1MF
C436	1-107-826-11	s	CAPACITOR,CHIP CERAMIC 0.1MF
C437	1-107-826-11	s	CAPACITOR,CHIP CERAMIC 0.1MF
C438	1-107-826-11	s	CAPACITOR,CHIP CERAMIC 0.1MF
C439	1-107-826-11	s	CAPACITOR,CHIP CERAMIC 0.1MF
C440	1-127-692-11	s	CAP, CHIP CERAMIC 10MF B 3216
C441	1-127-692-11	s	CAP, CHIP CERAMIC 10MF B 3216
C442	1-107-826-11	s	CAPACITOR,CHIP CERAMIC 0.1MF
C443	1-107-826-11	s	CAPACITOR,CHIP CERAMIC 0.1MF
C444	1-107-826-11	s	CAPACITOR,CHIP CERAMIC 0.1MF
C445	1-107-826-11	s	CAPACITOR,CHIP CERAMIC 0.1MF
C446	1-107-826-11	s	CAPACITOR,CHIP CERAMIC 0.1MF
C447	1-107-826-11	s	CAPACITOR,CHIP CERAMIC 0.1MF
C448	1-107-826-11	s	CAPACITOR,CHIP CERAMIC 0.1MF
C449	1-107-826-11	s	CAPACITOR,CHIP CERAMIC 0.1MF
C450	1-127-692-11	s	CAP, CHIP CERAMIC 10MF B 3216
C451	1-127-692-11	s	CAP, CHIP CERAMIC 10MF B 3216
C452	1-107-826-11	s	CAPACITOR,CHIP CERAMIC 0.1MF
C453	1-107-826-11	s	CAPACITOR,CHIP CERAMIC 0.1MF
C454	1-107-826-11	s	CAPACITOR,CHIP CERAMIC 0.1MF
C455	1-107-826-11	s	CAPACITOR,CHIP CERAMIC 0.1MF
C456	1-107-826-11	s	CAPACITOR,CHIP CERAMIC 0.1MF
C457	1-107-826-11	s	CAPACITOR,CHIP CERAMIC 0.1MF
C527	1-107-826-11	s	CAPACITOR,CHIP CERAMIC 0.1MF
C528	1-107-826-11	s	CAPACITOR,CHIP CERAMIC 0.1MF
C529	1-107-826-11	s	CAPACITOR,CHIP CERAMIC 0.1MF
C530	1-107-826-11	s	CAPACITOR,CHIP CERAMIC 0.1MF
C531	1-107-826-11	s	CAPACITOR,CHIP CERAMIC 0.1MF
C532	1-107-826-11	s	CAPACITOR,CHIP CERAMIC 0.1MF
C533	1-107-826-11	s	CAPACITOR,CHIP CERAMIC 0.1MF
C534	1-107-826-11	s	CAPACITOR,CHIP CERAMIC 0.1MF
C535	1-107-826-11	s	CAPACITOR,CHIP CERAMIC 0.1MF
C536	1-107-826-11	s	CAPACITOR,CHIP CERAMIC 0.1MF
C537	1-107-826-11	s	CAPACITOR,CHIP CERAMIC 0.1MF
C538	1-107-826-11	s	CAPACITOR,CHIP CERAMIC 0.1MF
C539	1-107-826-11	s	CAPACITOR,CHIP CERAMIC 0.1MF
C540	1-107-826-11	s	CAPACITOR,CHIP CERAMIC 0.1MF
C541	1-107-826-11	s	CAPACITOR,CHIP CERAMIC 0.1MF
C542	1-107-826-11	s	CAPACITOR,CHIP CERAMIC 0.1MF
C543	1-107-826-11	s	CAPACITOR,CHIP CERAMIC 0.1MF
C544	1-107-826-11	s	CAPACITOR,CHIP CERAMIC 0.1MF
C545	1-107-826-11	s	CAPACITOR,CHIP CERAMIC 0.1MF
C546	1-107-826-11	s	CAPACITOR,CHIP CERAMIC 0.1MF
C547	1-107-826-11	s	CAPACITOR,CHIP CERAMIC 0.1MF
C548	1-107-826-11	s	CAPACITOR,CHIP CERAMIC 0.1MF
C549	1-107-826-11	s	CAPACITOR,CHIP CERAMIC 0.1MF
C550	1-107-826-11	s	CAPACITOR,CHIP CERAMIC 0.1MF
C551	1-107-826-11	s	CAPACITOR,CHIP CERAMIC 0.1MF
C552	1-107-826-11	s	CAPACITOR,CHIP CERAMIC 0.1MF
C553	1-107-826-11	s	CAPACITOR,CHIP CERAMIC 0.1MF
C555	1-127-708-11	s	CAP, POLYPYRROLE 100MF
C701	1-107-826-11	s	CAPACITOR,CHIP CERAMIC 0.1MF
C702	1-107-826-11	s	CAPACITOR,CHIP CERAMIC 0.1MF
C704	1-107-826-11	s	CAPACITOR,CHIP CERAMIC 0.1MF

(HIF-1B BOARD [SUFFIX 22, 23] for BKMW-104)

Ref. No. or Q'ty	Part No.	SP	Description
C705	1-107-826-11	s	CAPACITOR,CHIP CERAMIC 0.1MF
C706	1-107-826-11	s	CAPACITOR,CHIP CERAMIC 0.1MF
C707	1-107-826-11	s	CAPACITOR,CHIP CERAMIC 0.1MF
C708	1-127-692-11	s	CAP, CHIP CERAMIC 10MF B 3216
C709	1-107-826-11	s	CAPACITOR,CHIP CERAMIC 0.1MF
C710	1-107-826-11	s	CAPACITOR,CHIP CERAMIC 0.1MF
C711	1-107-826-11	s	CAPACITOR,CHIP CERAMIC 0.1MF
C713	1-127-692-11	s	CAP, CHIP CERAMIC 10MF B 3216
C714	1-107-826-11	s	CAPACITOR,CHIP CERAMIC 0.1MF
C719	1-107-826-11	s	CAPACITOR,CHIP CERAMIC 0.1MF
C721	1-107-826-11	s	CAPACITOR,CHIP CERAMIC 0.1MF
C722	1-107-826-11	s	CAPACITOR,CHIP CERAMIC 0.1MF
C724	1-107-826-11	s	CAPACITOR,CHIP CERAMIC 0.1MF
C727	1-107-826-11	s	CAPACITOR,CHIP CERAMIC 0.1MF
C730	1-107-826-11	s	CAPACITOR,CHIP CERAMIC 0.1MF
C731	1-107-826-11	s	CAPACITOR,CHIP CERAMIC 0.1MF
C733	1-127-692-11	s	CAP, CHIP CERAMIC 10MF B 3216
C734	1-127-692-11	s	CAP, CHIP CERAMIC 10MF B 3216
C737	1-107-826-11	s	CAPACITOR,CHIP CERAMIC 0.1MF
C746	1-162-970-11	s	CAPACITOR CERAMIC 0.01MF/25V B
C747 *2	1-107-826-11	s	CAPACITOR,CHIP CERAMIC 0.1MF
C800	1-127-708-11	s	CAP, POLYPYRROLE 100MF
C801	1-127-708-11	s	CAP, POLYPYRROLE 100MF
C802	1-107-826-11	s	CAPACITOR,CHIP CERAMIC 0.1MF
C803	1-107-826-11	s	CAPACITOR,CHIP CERAMIC 0.1MF
C804	1-107-826-11	s	CAPACITOR,CHIP CERAMIC 0.1MF
C805	1-107-826-11	s	CAPACITOR,CHIP CERAMIC 0.1MF
C806	1-107-826-11	s	CAPACITOR,CHIP CERAMIC 0.1MF
C807	1-107-826-11	s	CAPACITOR,CHIP CERAMIC 0.1MF
C808	1-107-826-11	s	CAPACITOR,CHIP CERAMIC 0.1MF
C809	1-107-826-11	s	CAPACITOR,CHIP CERAMIC 0.1MF
C810	1-107-826-11	s	CAPACITOR,CHIP CERAMIC 0.1MF
C811	1-107-826-11	s	CAPACITOR,CHIP CERAMIC 0.1MF
C812	1-107-826-11	s	CAPACITOR,CHIP CERAMIC 0.1MF
C813	1-107-826-11	s	CAPACITOR,CHIP CERAMIC 0.1MF
C814	1-107-826-11	s	CAPACITOR,CHIP CERAMIC 0.1MF
C815	1-107-826-11	s	CAPACITOR,CHIP CERAMIC 0.1MF
C816	1-107-826-11	s	CAPACITOR,CHIP CERAMIC 0.1MF
C817	1-107-826-11	s	CAPACITOR,CHIP CERAMIC 0.1MF
C818	1-107-826-11	s	CAPACITOR,CHIP CERAMIC 0.1MF
C819	1-107-826-11	s	CAPACITOR,CHIP CERAMIC 0.1MF
C820	1-107-826-11	s	CAPACITOR,CHIP CERAMIC 0.1MF
C821	1-107-826-11	s	CAPACITOR,CHIP CERAMIC 0.1MF
C822	1-107-826-11	s	CAPACITOR,CHIP CERAMIC 0.1MF
C823	1-107-826-11	s	CAPACITOR,CHIP CERAMIC 0.1MF
C824	1-107-826-11	s	CAPACITOR,CHIP CERAMIC 0.1MF
C825	1-107-826-11	s	CAPACITOR,CHIP CERAMIC 0.1MF
C826	1-107-826-11	s	CAPACITOR,CHIP CERAMIC 0.1MF
C827	1-107-826-11	s	CAPACITOR,CHIP CERAMIC 0.1MF
C828	1-107-826-11	s	CAPACITOR,CHIP CERAMIC 0.1MF
C829	1-107-826-11	s	CAPACITOR,CHIP CERAMIC 0.1MF
C830	1-107-826-11	s	CAPACITOR,CHIP CERAMIC 0.1MF
C831	1-107-826-11	s	CAPACITOR,CHIP CERAMIC 0.1MF
C832	1-107-826-11	s	CAPACITOR,CHIP CERAMIC 0.1MF
C833	1-107-826-11	s	CAPACITOR,CHIP CERAMIC 0.1MF
C834	1-107-826-11	s	CAPACITOR,CHIP CERAMIC 0.1MF
C835	1-107-826-11	s	CAPACITOR,CHIP CERAMIC 0.1MF
C836	1-107-826-11	s	CAPACITOR,CHIP CERAMIC 0.1MF
C837	1-107-826-11	s	CAPACITOR,CHIP CERAMIC 0.1MF

(HIF-1B BOARD [SUFFIX 22, 23] for BKMW-104)

Ref. No. or Q'ty	Part No.	SP	Description
C838	1-162-919-11	s	CAPACITOR,CERAMIC 22PF/50V CH
C839	1-162-928-11	s	CAPACITOR,CERAMIC 120PF/50V CH
C840	1-107-826-11	s	CAPACITOR,CHIP CERAMIC 0.1MF
C841	1-107-826-11	s	CAPACITOR,CHIP CERAMIC 0.1MF
C842	1-107-826-11	s	CAPACITOR,CHIP CERAMIC 0.1MF
C843	1-125-891-11	s	CAPACITOR CERAMIC 0.47MF/10V
C844	1-125-891-11	s	CAPACITOR CERAMIC 0.47MF/10V
C845	1-107-826-11	s	CAPACITOR,CHIP CERAMIC 0.1MF
C846	1-107-826-11	s	CAPACITOR,CHIP CERAMIC 0.1MF
C847	1-107-826-11	s	CAPACITOR,CHIP CERAMIC 0.1MF
C848	1-162-923-11	s	CAPACITOR,CERAMIC 47PF/50V CH
C849	1-162-970-11	s	CAPACITOR CERAMIC 0.01MF/25V B
C850	1-107-826-11	s	CAPACITOR,CHIP CERAMIC 0.1MF
C851	1-162-928-11	s	CAPACITOR,CERAMIC 120PF/50V CH
C852	1-107-826-11	s	CAPACITOR,CHIP CERAMIC 0.1MF
C853	1-162-927-11	s	CAPACITOR,CERAMIC 100PF/50V CH
C854	1-107-826-11	s	CAPACITOR,CHIP CERAMIC 0.1MF
C855	1-162-923-11	s	CAPACITOR,CERAMIC 47PF/50V CH
C856	1-107-826-11	s	CAPACITOR,CHIP CERAMIC 0.1MF
C857	1-107-826-11	s	CAPACITOR,CHIP CERAMIC 0.1MF
C858	1-162-924-11	s	CAPACITOR,CERAMIC 56PF/50V CH
C859	1-107-826-11	s	CAPACITOR,CHIP CERAMIC 0.1MF
C860	1-107-826-11	s	CAPACITOR,CHIP CERAMIC 0.1MF
C861	1-107-826-11	s	CAPACITOR,CHIP CERAMIC 0.1MF
C862	1-162-928-11	s	CAPACITOR,CERAMIC 120PF/50V CH
C863	1-107-826-11	s	CAPACITOR,CHIP CERAMIC 0.1MF
C864	1-162-928-11	s	CAPACITOR,CERAMIC 120PF/50V CH
C865	1-127-950-11	s	CAPACITOR,CHIP FILM 0.01MF
C866	1-127-950-11	s	CAPACITOR,CHIP FILM 0.01MF
C867	1-127-950-11	s	CAPACITOR,CHIP FILM 0.01MF
C868	1-127-956-11	s	CAPACITOR,CHIP FILM 0.1MF
C869	1-127-956-11	s	CAPACITOR,CHIP FILM 0.1MF
C870	1-127-956-11	s	CAPACITOR,CHIP FILM 0.1MF
C871	1-127-950-11	s	CAPACITOR,CHIP FILM 0.01MF
C872	1-127-956-11	s	CAPACITOR,CHIP FILM 0.1MF
C873	1-107-826-11	s	CAPACITOR,CHIP CERAMIC 0.1MF
C874	1-107-826-11	s	CAPACITOR,CHIP CERAMIC 0.1MF
C875	1-107-826-11	s	CAPACITOR,CHIP CERAMIC 0.1MF
C876	1-107-826-11	s	CAPACITOR,CHIP CERAMIC 0.1MF
C877	1-107-826-11	s	CAPACITOR,CHIP CERAMIC 0.1MF
C878	1-107-826-11	s	CAPACITOR,CHIP CERAMIC 0.1MF
C879	1-107-826-11	s	CAPACITOR,CHIP CERAMIC 0.1MF
C880	1-107-826-11	s	CAPACITOR,CHIP CERAMIC 0.1MF
C881	1-107-826-11	s	CAPACITOR,CHIP CERAMIC 0.1MF
C882	1-107-826-11	s	CAPACITOR,CHIP CERAMIC 0.1MF
C883	1-107-826-11	s	CAPACITOR,CHIP CERAMIC 0.1MF
C884	1-107-826-11	s	CAPACITOR,CHIP CERAMIC 0.1MF
C885	1-127-692-11	s	CAP, CHIP CERAMIC 10MF B 3216
C886	1-107-826-11	s	CAPACITOR,CHIP CERAMIC 0.1MF
C887	1-107-826-11	s	CAPACITOR,CHIP CERAMIC 0.1MF
C888	1-107-826-11	s	CAPACITOR,CHIP CERAMIC 0.1MF
C889	1-107-826-11	s	CAPACITOR,CHIP CERAMIC 0.1MF
C890	1-107-826-11	s	CAPACITOR,CHIP CERAMIC 0.1MF
C891	1-107-826-11	s	CAPACITOR,CHIP CERAMIC 0.1MF
C892	1-107-826-11	s	CAPACITOR,CHIP CERAMIC 0.1MF
C893	1-107-826-11	s	CAPACITOR,CHIP CERAMIC 0.1MF
C894	1-107-826-11	s	CAPACITOR,CHIP CERAMIC 0.1MF
C895	1-107-826-11	s	CAPACITOR,CHIP CERAMIC 0.1MF
C896	1-107-826-11	s	CAPACITOR,CHIP CERAMIC 0.1MF

(HIF-1B BOARD [SUFFIX 22, 23] for BKMW-104)

Ref. No. or Q'ty	Part No.	SP	Description
C897	1-107-826-11	s	CAPACITOR,CHIP CERAMIC 0.1MF
C898	1-107-826-11	s	CAPACITOR,CHIP CERAMIC 0.1MF
C899	1-107-826-11	s	CAPACITOR,CHIP CERAMIC 0.1MF
C900	1-162-970-11	s	CAPACITOR CERAMIC 0.01MF/25V B
C902	1-107-826-11	s	CAPACITOR,CHIP CERAMIC 0.1MF
C903	1-107-826-11	s	CAPACITOR,CHIP CERAMIC 0.1MF
C904	1-107-826-11	s	CAPACITOR,CHIP CERAMIC 0.1MF
C905	1-107-826-11	s	CAPACITOR,CHIP CERAMIC 0.1MF
C907	1-107-826-11	s	CAPACITOR,CHIP CERAMIC 0.1MF
C908	1-107-826-11	s	CAPACITOR,CHIP CERAMIC 0.1MF
C909	1-107-826-11	s	CAPACITOR,CHIP CERAMIC 0.1MF
C910	1-162-970-11	s	CAPACITOR CERAMIC 0.01MF/25V B
C911	1-107-826-11	s	CAPACITOR,CHIP CERAMIC 0.1MF
C912	1-107-826-11	s	CAPACITOR,CHIP CERAMIC 0.1MF
C913	1-107-826-11	s	CAPACITOR,CHIP CERAMIC 0.1MF
C914	1-107-826-11	s	CAPACITOR,CHIP CERAMIC 0.1MF
C915	1-107-826-11	s	CAPACITOR,CHIP CERAMIC 0.1MF
C916	1-107-826-11	s	CAPACITOR,CHIP CERAMIC 0.1MF
C917	1-107-826-11	s	CAPACITOR,CHIP CERAMIC 0.1MF
C918	1-107-826-11	s	CAPACITOR,CHIP CERAMIC 0.1MF
C919	1-107-826-11	s	CAPACITOR,CHIP CERAMIC 0.1MF
C920	1-107-826-11	s	CAPACITOR,CHIP CERAMIC 0.1MF
C921	1-107-826-11	s	CAPACITOR,CHIP CERAMIC 0.1MF
C922	1-107-826-11	s	CAPACITOR,CHIP CERAMIC 0.1MF
C923	1-107-826-11	s	CAPACITOR,CHIP CERAMIC 0.1MF
C924	1-107-826-11	s	CAPACITOR,CHIP CERAMIC 0.1MF
C925	1-162-927-11	s	CAPACITOR,CERAMIC 100PF/50V CH
C926	1-162-927-11	s	CAPACITOR,CERAMIC 100PF/50V CH
C927	1-162-927-11	s	CAPACITOR,CERAMIC 100PF/50V CH
C1000	1-127-708-11	s	CAP, POLYPYRROLE 100MF
C1001	1-127-708-11	s	CAP, POLYPYRROLE 100MF
C1002	1-127-708-11	s	CAP, POLYPYRROLE 100MF
C1003	1-107-826-11	s	CAPACITOR,CHIP CERAMIC 0.1MF
C1004	1-107-826-11	s	CAPACITOR,CHIP CERAMIC 0.1MF
C1005	1-107-826-11	s	CAPACITOR,CHIP CERAMIC 0.1MF
C1006	1-107-826-11	s	CAPACITOR,CHIP CERAMIC 0.1MF
C1007	1-107-826-11	s	CAPACITOR,CHIP CERAMIC 0.1MF
C1008	1-107-826-11	s	CAPACITOR,CHIP CERAMIC 0.1MF
C1009	1-107-826-11	s	CAPACITOR,CHIP CERAMIC 0.1MF
C1010	1-107-826-11	s	CAPACITOR,CHIP CERAMIC 0.1MF
C1011	1-107-826-11	s	CAPACITOR,CHIP CERAMIC 0.1MF
C1012	1-107-826-11	s	CAPACITOR,CHIP CERAMIC 0.1MF
C1015	1-127-708-11	s	CAP, POLYPYRROLE 100MF
C1017	1-127-708-11	s	CAP, POLYPYRROLE 100MF
C1019	1-131-603-11	s	CAP, POLYPYRROLE 100MF
C1022	1-162-970-11	s	CAPACITOR CERAMIC 0.01MF/25V B
C1025	1-107-826-11	s	CAPACITOR,CHIP CERAMIC 0.1MF
C1026	1-107-826-11	s	CAPACITOR,CHIP CERAMIC 0.1MF
C1029	1-115-416-11	s	CAPACITOR,CERAMIC 1000PF/25V
C1031	1-107-826-11	s	CAPACITOR,CHIP CERAMIC 0.1MF
C1032	1-107-826-11	s	CAPACITOR,CHIP CERAMIC 0.1MF
C1033	1-125-889-11	s	CAPACITOR, C.CERAMIC 2.2MF
C1034	1-107-826-11	s	CAPACITOR,CHIP CERAMIC 0.1MF
C1035	1-127-692-11	s	CAP, CHIP CERAMIC 10MF B 3216
C1037	1-115-416-11	s	CAPACITOR,CERAMIC 1000PF/25V
C1038	1-162-970-11	s	CAPACITOR CERAMIC 0.01MF/25V B
C1064	1-131-603-11	s	CAP, POLYPYRROLE 100MF
C1065	1-127-708-11	s	CAP, POLYPYRROLE 100MF
C1066	1-127-708-11	s	CAP, POLYPYRROLE 100MF

(HIF-1B BOARD [SUFFIX 22, 23] for BKMW-104)

Ref. No. or Q'ty	Part No.	SP	Description
C1067	1-127-692-11	s	CAP, CHIP CERAMIC 10MF B 3216
C1068	1-127-692-11	s	CAP, CHIP CERAMIC 10MF B 3216
C1069	1-127-692-11	s	CAP, CHIP CERAMIC 10MF B 3216
C1070	1-127-692-11	s	CAP, CHIP CERAMIC 10MF B 3216
C1071	1-127-692-11	s	CAP, CHIP CERAMIC 10MF B 3216
C1072	1-127-692-11	s	CAP, CHIP CERAMIC 10MF B 3216
C1073	1-107-826-11	s	CAPACITOR,CHIP CERAMIC 0.1MF
C1074	1-107-826-11	s	CAPACITOR,CHIP CERAMIC 0.1MF
C1075	1-107-826-11	s	CAPACITOR,CHIP CERAMIC 0.1MF
C1076	1-107-826-11	s	CAPACITOR,CHIP CERAMIC 0.1MF
C1103	1-107-826-11	s	CAPACITOR,CHIP CERAMIC 0.1MF
C1104	1-107-826-11	s	CAPACITOR,CHIP CERAMIC 0.1MF
C1105	1-107-826-11	s	CAPACITOR,CHIP CERAMIC 0.1MF
C1800	1-107-826-11	s	CAPACITOR,CHIP CERAMIC 0.1MF
C1801	1-107-826-11	s	CAPACITOR,CHIP CERAMIC 0.1MF
C1802	1-107-826-11	s	CAPACITOR,CHIP CERAMIC 0.1MF
C1803	1-107-826-11	s	CAPACITOR,CHIP CERAMIC 0.1MF
C1804	1-107-826-11	s	CAPACITOR,CHIP CERAMIC 0.1MF
C1805	1-107-826-11	s	CAPACITOR,CHIP CERAMIC 0.1MF
CN200	1-580-789-21	o	PIN,CONNECTOR (SMD) 6P
CN900	1-580-756-21	o	PIN, CONNECTOR 7P
D700	8-719-820-41	s	DIODE 1SS302
D1000	8-719-066-98	s	DIODE RB051L-40
D1001	8-719-938-75	s	DIODE SB05-05CP (RECTI)
D1002	8-719-938-75	s	DIODE SB05-05CP (RECTI)
D1003	8-719-066-98	s	DIODE RB051L-40
F1000	⚠ 1-576-270-11	s	FUSE CHIP 4A/125V (6125)
F1001 *2	⚠ 1-576-329-11	s	FUSE CHIP 10A/125V (6125)
*1	⚠ 1-576-270-11	s	FUSE CHIP 4A/125V (6125)
FB700	1-414-864-11	s	INDUCTOR, MICRO (CHIP TYPE)
FB702	1-414-864-11	s	INDUCTOR, MICRO (CHIP TYPE)
FB800	1-414-864-11	s	INDUCTOR, MICRO (CHIP TYPE)
FB801	1-414-864-11	s	INDUCTOR, MICRO (CHIP TYPE)
FB802	1-414-864-11	s	INDUCTOR, MICRO (CHIP TYPE)
FB803	1-414-864-11	s	INDUCTOR, MICRO (CHIP TYPE)
FB804	1-414-864-11	s	INDUCTOR, MICRO (CHIP TYPE)
FB805	1-414-864-11	s	INDUCTOR, MICRO (CHIP TYPE)
FB806	1-414-864-11	s	INDUCTOR, MICRO (CHIP TYPE)
FB807	1-414-864-11	s	INDUCTOR, MICRO (CHIP TYPE)
FB808	1-414-864-11	s	INDUCTOR, MICRO (CHIP TYPE)
FB809	1-414-864-11	s	INDUCTOR, MICRO (CHIP TYPE)
FB810	1-414-864-11	s	INDUCTOR, MICRO (CHIP TYPE)
IC110	6-700-804-01	s	IC SN74LVC574APWR
IC111	6-700-804-01	s	IC SN74LVC574APWR
IC112	6-700-804-01	s	IC SN74LVC574APWR
IC201	8-759-549-01	s	IC SN74LV125APWR
IC202	8-759-679-55	s	IC SN74LVC08APWR
IC203	8-759-662-39	s	IC 74VHCT245AMTCX
IC204	6-702-148-01	s	IC XC61CN2702NR
IC205	8-759-539-53	s	IC MB90096PF-G-139-BND(ER)
IC208	8-759-271-86	s	IC TC7SH04FU
IC209	8-759-669-44	s	IC SN74LVC74APWR-12
IC301	8-759-549-15	s	IC SN74LV245APWR
IC302	6-702-238-11	s	IC HY57V643220CT-7TR
IC303	6-702-238-11	s	IC HY57V643220CT-7TR
IC304	6-702-238-11	s	IC HY57V643220CT-7TR

(HIF-1B BOARD [SUFFIX 22, 23] for BKMW-104)

Ref. No. or Q'ty	Part No.	SP	Description
IC305	6-702-238-11	s	IC HY57V643220CT-7TR
IC401	8-759-651-59	s	IC SN74CBTLV3245APWR
IC402	8-759-651-59	s	IC SN74CBTLV3245APWR
IC403	8-759-651-59	s	IC SN74CBTLV3245APWR
IC407	6-704-173-01	s	IC MS81V04160A-25TB
IC408	6-704-173-01	s	IC MS81V04160A-25TB
IC409	6-704-173-01	s	IC MS81V04160A-25TB
IC410	6-704-173-01	s	IC MS81V04160A-25TB
IC411	6-700-804-01	s	IC SN74LVC574APWR
IC412	6-700-804-01	s	IC SN74LVC574APWR
IC413	6-700-804-01	s	IC SN74LVC574APWR
IC414	6-700-804-01	s	IC SN74LVC574APWR
IC415	6-700-804-01	s	IC SN74LVC574APWR
IC416	6-700-804-01	s	IC SN74LVC574APWR
IC504	6-702-238-11	s	IC HY57V643220CT-7TR
IC505	6-702-238-11	s	IC HY57V643220CT-7TR
IC701	8-759-392-77	s	IC SN74LVC245APW (E20)
IC703	8-759-598-13	s	IC CDC2510CPWR
IC704	8-759-694-36	s	IC SN74CBTLV3257PWR
IC705	8-759-639-85	s	IC SN65LVDS31DR
IC708	8-759-392-77	s	IC SN74LVC245APW (E20)
IC709	8-759-196-96	s	IC TC7SH08FU (TE85R)
IC713	8-759-598-13	s	IC CDC2510CPWR
IC716	8-759-675-47	s	IC SN74LVC04APWR
IC724	8-759-698-08	s	IC SN74CBTLV1G125DCKR
IC725	8-759-698-08	s	IC SN74CBTLV1G125DCKR
IC726	8-759-271-86	s	IC TC7SH04FU
IC730	8-759-675-47	s	IC SN74LVC04APWR
IC732	8-759-592-44	s	IC TC7SZ04FU(TE85R)
IC733 *2	6-703-875-01	s	IC CDCVF2505PWR
IC800	8-759-573-91	s	IC AD8055ART-REEL7
IC801	8-759-987-27	s	IC LM1881M
IC802	8-759-573-91	s	IC AD8055ART-REEL7
IC803	6-701-453-01	s	IC SN75207BNSR
IC804	8-759-196-96	s	IC TC7SH08FU (TE85R)
IC805	8-759-472-35	s	IC 74VHC221AMTCX
IC806	8-759-472-04	s	IC 74VHC74MTCX
IC807	8-759-472-35	s	IC 74VHC221AMTCX
IC808	8-759-678-15	s	IC TLV2231CDBVR
IC809	8-759-485-79	s	IC TC7SET08FU (TE85L)
IC810	8-759-678-15	s	IC TLV2231CDBVR
IC811	8-759-678-15	s	IC TLV2231CDBVR
IC812	8-759-678-15	s	IC TLV2231CDBVR
IC813	8-759-564-49	s	IC TC7W53FU-TE12R
IC814	8-759-564-49	s	IC TC7W53FU-TE12R
IC815	8-759-592-47	s	IC TC7SZ08FU(TE85R)
IC816	8-759-592-49	s	IC TC7SZ125FU(TE85R)
IC817	8-759-592-49	s	IC TC7SZ125FU(TE85R)
IC818	8-759-592-47	s	IC TC7SZ08FU(TE85R)
IC819	8-759-592-47	s	IC TC7SZ08FU(TE85R)
IC820	8-759-592-49	s	IC TC7SZ125FU(TE85R)
IC821	8-759-592-47	s	IC TC7SZ08FU(TE85R)
IC822	8-759-524-08	s	IC TC74VHC139FT(EL)
IC823	8-759-592-49	s	IC TC7SZ125FU(TE85R)
IC824	8-759-592-47	s	IC TC7SZ08FU(TE85R)
IC825	8-759-592-47	s	IC TC7SZ08FU(TE85R)
IC826	8-759-592-47	s	IC TC7SZ08FU(TE85R)
IC827	8-759-183-53	s	IC TL431CPK-E2
IC828	8-759-669-78	s	IC TLC2933IPWR-12

(HIF-1B BOARD [SUFFIX 22, 23] for BKMW-104)

Ref. No. or Q'ty	Part No.	SP	Description
IC829	8-759-669-78	s	IC TLC2933IPWR-12
IC830	8-759-472-35	s	IC 74VHC221AMTCX
IC900	8-759-549-15	s	IC SN74LV245APWR
IC901	8-759-549-15	s	IC SN74LV245APWR
IC902	8-759-549-15	s	IC SN74LV245APWR
IC903	8-759-549-15	s	IC SN74LV245APWR
IC905	8-759-549-15	s	IC SN74LV245APWR
IC906	8-759-549-15	s	IC SN74LV245APWR
IC907	8-759-549-15	s	IC SN74LV245APWR
IC908	8-759-549-15	s	IC SN74LV245APWR
IC909	8-759-661-00	s	IC ISPLSI2192VE-100LT128
IC910	8-759-549-15	s	IC SN74LV245APWR
IC912	8-759-549-15	s	IC SN74LV245APWR
IC913	8-759-662-38	s	IC 74VHCT08AMTCX
IC914	8-759-471-96	s	IC 74VHC08MTCX
IC915	8-759-327-60	s	IC TC7W125FU-TE12R
IC916	8-759-472-24	s	IC 74VHC157MTCX
IC919	8-759-271-86	s	IC TC7SH04FU
IC1000	8-759-543-08	s	IC LM2940CSX-5.0
IC1001	8-759-539-89	s	IC LM2990SX-5.0
IC1002	8-759-642-22	s	IC UPC29M05T-E2
IC1004	8-759-597-57	s	IC LTC1628CG#TR
IC1005	8-759-833-99	s	IC MC74HC4052ADTR2
IC1006	8-759-833-99	s	IC MC74HC4052ADTR2
IC1007	8-759-485-79	s	IC TC7SET08FU (TE85L)
IC1008	8-759-485-79	s	IC TC7SET08FU (TE85L)
IC1102	8-759-392-77	s	IC SN74LVC245APW (E20)
IC1104	8-759-472-24	s	IC 74VHC157MTCX
IC1105	8-759-472-24	s	IC 74VHC157MTCX
L800	1-412-987-31	s	INDUCTOR (SMALL TYPE) 4.70UH
L1000	1-406-864-21	s	COIL,CHOKE 4.7UH
L1001	1-406-864-21	s	COIL,CHOKE 4.7UH
L1002	1-406-864-21	s	COIL,CHOKE 4.7UH
L1003	1-406-864-21	s	COIL,CHOKE 4.7UH
L1004	1-406-864-21	s	COIL,CHOKE 4.7UH
L1005	1-469-970-11	s	INDUCTOR, (SMD) 15UH
L1006	1-469-970-11	s	INDUCTOR, (SMD) 15UH
L1007	1-406-864-21	s	COIL,CHOKE 4.7UH
Q200	8-729-928-81	s	TRANSISTOR DTC144EE
Q201	8-729-928-54	s	TRANSISTOR DTA123JE
Q202	8-729-928-19	s	TRANSISTOR 2SA1774R
Q203	8-729-047-32	s	TRANSISTOR SI4425DY-T1
Q701	8-729-928-81	s	TRANSISTOR DTC144EE
Q704	8-729-928-19	s	TRANSISTOR 2SA1774R
Q800	8-729-928-19	s	TRANSISTOR 2SA1774R
Q801	8-729-927-99	s	TRANSISTOR 2SC4617R
Q802	8-729-143-07	s	TRANSISTOR 2SA1610-Y33
Q1000	8-729-047-85	s	TRANSISTOR SI4416DY-T1
Q1001	8-729-047-85	s	TRANSISTOR SI4416DY-T1
Q1002	8-729-047-85	s	TRANSISTOR SI4416DY-T1
Q1003	8-729-047-85	s	TRANSISTOR SI4416DY-T1
R68	1-216-864-11	s	CONDUCTOR, CHIP (1608)
R207	1-211-985-11	s	RESISTOR,CHIP 47 1/10W (1608)
R208	1-211-985-11	s	RESISTOR,CHIP 47 1/10W (1608)
R209	1-211-985-11	s	RESISTOR,CHIP 47 1/10W (1608)
R210	1-211-985-11	s	RESISTOR,CHIP 47 1/10W (1608)
R211	1-211-985-11	s	RESISTOR,CHIP 47 1/10W (1608)
R212	1-211-985-11	s	RESISTOR,CHIP 47 1/10W (1608)

(HIF-1B BOARD [SUFFIX 22, 23] for BKMW-104)

Ref. No. or Q'ty	Part No.	SP	Description
R213	1-211-985-11	s	RESISTOR,CHIP 47 1/10W (1608)
R214	1-211-985-11	s	RESISTOR,CHIP 47 1/10W (1608)
R215	1-211-985-11	s	RESISTOR,CHIP 47 1/10W (1608)
R216	1-211-985-11	s	RESISTOR,CHIP 47 1/10W (1608)
R217	1-211-985-11	s	RESISTOR,CHIP 47 1/10W (1608)
R218	1-211-985-11	s	RESISTOR,CHIP 47 1/10W (1608)
R219	1-211-985-11	s	RESISTOR,CHIP 47 1/10W (1608)
R220	1-211-985-11	s	RESISTOR,CHIP 47 1/10W (1608)
R221	1-211-985-11	s	RESISTOR,CHIP 47 1/10W (1608)
R222	1-211-985-11	s	RESISTOR,CHIP 47 1/10W (1608)
R223	1-211-985-11	s	RESISTOR,CHIP 47 1/10W (1608)
R224	1-211-985-11	s	RESISTOR,CHIP 47 1/10W (1608)
R225	1-211-985-11	s	RESISTOR,CHIP 47 1/10W (1608)
R226	1-211-985-11	s	RESISTOR,CHIP 47 1/10W (1608)
R227	1-211-985-11	s	RESISTOR,CHIP 47 1/10W (1608)
R228	1-211-985-11	s	RESISTOR,CHIP 47 1/10W (1608)
R235	1-211-985-11	s	RESISTOR,CHIP 47 1/10W (1608)
R236	1-211-985-11	s	RESISTOR,CHIP 47 1/10W (1608)
R237	1-211-985-11	s	RESISTOR,CHIP 47 1/10W (1608)
R238	1-211-985-11	s	RESISTOR,CHIP 47 1/10W (1608)
R239	1-211-985-11	s	RESISTOR,CHIP 47 1/10W (1608)
R240	1-211-985-11	s	RESISTOR,CHIP 47 1/10W (1608)
R241	1-211-985-11	s	RESISTOR,CHIP 47 1/10W (1608)
R242	1-211-985-11	s	RESISTOR,CHIP 47 1/10W (1608)
R243	1-211-985-11	s	RESISTOR,CHIP 47 1/10W (1608)
R244	1-211-985-11	s	RESISTOR,CHIP 47 1/10W (1608)
R245	1-211-985-11	s	RESISTOR,CHIP 47 1/10W (1608)
R246	1-211-985-11	s	RESISTOR,CHIP 47 1/10W (1608)
R247	1-211-985-11	s	RESISTOR,CHIP 47 1/10W (1608)
R248	1-211-985-11	s	RESISTOR,CHIP 47 1/10W (1608)
R249	1-211-985-11	s	RESISTOR,CHIP 47 1/10W (1608)
R250	1-211-985-11	s	RESISTOR,CHIP 47 1/10W (1608)
R252	1-218-871-11	s	RESISTOR,CHIP 10K 1/10W (1608)
R253	1-211-985-11	s	RESISTOR,CHIP 47 1/10W (1608)
R254	1-218-835-11	s	RESISTOR,CHIP 330 1/10W (1608)
R255	1-218-847-11	s	RESISTOR, CHIP 1K 1/10W (1608)
R256	1-218-847-11	s	RESISTOR, CHIP 1K 1/10W (1608)
R257	1-218-871-11	s	RESISTOR,CHIP 10K 1/10W (1608)
R258	1-211-985-11	s	RESISTOR,CHIP 47 1/10W (1608)
R259	1-211-985-11	s	RESISTOR,CHIP 47 1/10W (1608)
R260	1-211-985-11	s	RESISTOR,CHIP 47 1/10W (1608)
R261	1-211-985-11	s	RESISTOR,CHIP 47 1/10W (1608)
R262	1-211-985-11	s	RESISTOR,CHIP 47 1/10W (1608)
R263	1-218-847-11	s	RESISTOR, CHIP 1K 1/10W (1608)
R264	1-218-847-11	s	RESISTOR, CHIP 1K 1/10W (1608)
R265	1-218-835-11	s	RESISTOR,CHIP 330 1/10W (1608)
R266	1-218-835-11	s	RESISTOR,CHIP 330 1/10W (1608)
R267	1-218-835-11	s	RESISTOR,CHIP 330 1/10W (1608)
R268	1-218-863-11	s	RESISTOR,CHIP 4.7K 1/10W(1608)
R269	1-211-985-11	s	RESISTOR,CHIP 47 1/10W (1608)
R273	1-216-864-11	s	CONDUCTOR, CHIP (1608)
R300	1-218-883-11	s	RESISTOR,CHIP 33K 1/10W (1608)
R301	1-218-847-11	s	RESISTOR, CHIP 1K 1/10W (1608)
R302	1-211-985-11	s	RESISTOR,CHIP 47 1/10W (1608)
R303	1-211-985-11	s	RESISTOR,CHIP 47 1/10W (1608)
R310	1-216-864-11	s	CONDUCTOR, CHIP (1608)
R313	1-216-864-11	s	CONDUCTOR, CHIP (1608)
R400	1-211-977-11	s	RESISTOR,CHIP 22 1/10W (1608)
R401	1-211-977-11	s	RESISTOR,CHIP 22 1/10W (1608)

(HIF-1B BOARD [SUFFIX 22, 23] for BKMW-104)

Ref. No. or Q'ty	Part No.	SP	Description
R404	1-211-985-11	s	RESISTOR,CHIP 47 1/10W (1608)
R405	1-211-985-11	s	RESISTOR,CHIP 47 1/10W (1608)
R406	1-211-985-11	s	RESISTOR,CHIP 47 1/10W (1608)
R407	1-211-985-11	s	RESISTOR,CHIP 47 1/10W (1608)
R408	1-211-985-11	s	RESISTOR,CHIP 47 1/10W (1608)
R409	1-211-985-11	s	RESISTOR,CHIP 47 1/10W (1608)
R418	1-211-985-11	s	RESISTOR,CHIP 47 1/10W (1608)
R419	1-211-985-11	s	RESISTOR,CHIP 47 1/10W (1608)
R500	1-216-864-11	s	CONDUCTOR, CHIP (1608)
R503	1-216-864-11	s	CONDUCTOR, CHIP (1608)
R504	1-216-864-11	s	CONDUCTOR, CHIP (1608)
R629	1-216-864-11	s	CONDUCTOR, CHIP (1608)
R704	1-218-831-11	s	RESISTOR, CHIP 220 1/10W(1608)
R705	1-218-831-11	s	RESISTOR, CHIP 220 1/10W(1608)
R706	1-218-851-11	s	RESISTOR,CHIP 1.5K 1/10W(1608)
R707	1-218-847-11	s	RESISTOR, CHIP 1K 1/10W (1608)
R708	1-218-863-11	s	RESISTOR,CHIP 4.7K 1/10W(1608)
R709	1-218-863-11	s	RESISTOR,CHIP 4.7K 1/10W(1608)
R710	1-218-863-11	s	RESISTOR,CHIP 4.7K 1/10W(1608)
R711	1-211-985-11	s	RESISTOR,CHIP 47 1/10W (1608)
R712	1-211-985-11	s	RESISTOR,CHIP 47 1/10W (1608)
R713	1-211-985-11	s	RESISTOR,CHIP 47 1/10W (1608)
R714	1-211-985-11	s	RESISTOR,CHIP 47 1/10W (1608)
R716	1-216-864-11	s	CONDUCTOR, CHIP (1608)
R717	1-216-864-11	s	CONDUCTOR, CHIP (1608)
R718	1-216-864-11	s	CONDUCTOR, CHIP (1608)
R719	1-218-863-11	s	RESISTOR,CHIP 4.7K 1/10W(1608)
R720	1-216-864-11	s	CONDUCTOR, CHIP (1608)
R721	1-216-864-11	s	CONDUCTOR, CHIP (1608)
R722	1-216-864-11	s	CONDUCTOR, CHIP (1608)
R723	1-216-864-11	s	CONDUCTOR, CHIP (1608)
R724	1-216-864-11	s	CONDUCTOR, CHIP (1608)
R725	1-216-864-11	s	CONDUCTOR, CHIP (1608)
R726	1-216-864-11	s	CONDUCTOR, CHIP (1608)
R727	1-216-864-11	s	CONDUCTOR, CHIP (1608)
R728	1-216-864-11	s	CONDUCTOR, CHIP (1608)
R729	1-218-857-11	s	RESISTOR,CHIP 2.7K 1/10W(1608)
R733	1-211-985-11	s	RESISTOR,CHIP 47 1/10W (1608)
R734	1-211-985-11	s	RESISTOR,CHIP 47 1/10W (1608)
R735	1-211-985-11	s	RESISTOR,CHIP 47 1/10W (1608)
R736	1-211-985-11	s	RESISTOR,CHIP 47 1/10W (1608)
R737	1-211-985-11	s	RESISTOR,CHIP 47 1/10W (1608)
R738	1-211-985-11	s	RESISTOR,CHIP 47 1/10W (1608)
R739	1-211-985-11	s	RESISTOR,CHIP 47 1/10W (1608)
R740	1-211-985-11	s	RESISTOR,CHIP 47 1/10W (1608)
R743	1-211-985-11	s	RESISTOR,CHIP 47 1/10W (1608)
R744	1-211-985-11	s	RESISTOR,CHIP 47 1/10W (1608)
R745	1-211-985-11	s	RESISTOR,CHIP 47 1/10W (1608)
R746	1-211-985-11	s	RESISTOR,CHIP 47 1/10W (1608)
R750	1-211-985-11	s	RESISTOR,CHIP 47 1/10W (1608)
R753	1-211-985-11	s	RESISTOR,CHIP 47 1/10W (1608)
R754	1-211-985-11	s	RESISTOR,CHIP 47 1/10W (1608)
R755	1-211-985-11	s	RESISTOR,CHIP 47 1/10W (1608)
R756	1-218-847-11	s	RESISTOR, CHIP 1K 1/10W (1608)
R757	1-218-847-11	s	RESISTOR, CHIP 1K 1/10W (1608)
R758	1-218-847-11	s	RESISTOR, CHIP 1K 1/10W (1608)
R759	1-211-977-11	s	RESISTOR,CHIP 22 1/10W (1608)
R760	1-211-977-11	s	RESISTOR,CHIP 22 1/10W (1608)
R761	1-211-977-11	s	RESISTOR,CHIP 22 1/10W (1608)

(HIF-1B BOARD [SUFFIX 22, 23] for BKMW-104)

Ref. No. or Q'ty	Part No.	SP	Description
R762	1-211-977-11	s	RESISTOR,CHIP 22 1/10W (1608)
R763	1-211-977-11	s	RESISTOR,CHIP 22 1/10W (1608)
R764	1-211-977-11	s	RESISTOR,CHIP 22 1/10W (1608)
R765	1-211-977-11	s	RESISTOR,CHIP 22 1/10W (1608)
R766	1-211-977-11	s	RESISTOR,CHIP 22 1/10W (1608)
R767	1-211-977-11	s	RESISTOR,CHIP 22 1/10W (1608)
R768	1-211-977-11	s	RESISTOR,CHIP 22 1/10W (1608)
R770	1-218-895-11	s	RESISTOR,CHIP 100K 1/10W(1608)
R771	1-218-847-11	s	RESISTOR, CHIP 1K 1/10W (1608)
R772	1-218-871-11	s	RESISTOR,CHIP 10K 1/10W (1608)
R773	1-211-985-11	s	RESISTOR,CHIP 47 1/10W (1608)
R774	1-211-985-11	s	RESISTOR,CHIP 47 1/10W (1608)
R781	1-218-863-11	s	RESISTOR,CHIP 4.7K 1/10W(1608)
R783	1-216-864-11	s	CONDUCTOR, CHIP (1608)
R788	1-218-847-11	s	RESISTOR, CHIP 1K 1/10W (1608)
R789	1-218-847-11	s	RESISTOR, CHIP 1K 1/10W (1608)
R790	1-218-831-11	s	RESISTOR, CHIP 220 1/10W(1608)
R793	1-211-977-11	s	RESISTOR,CHIP 22 1/10W (1608)
R796	1-218-863-11	s	RESISTOR,CHIP 4.7K 1/10W(1608)
R800	1-218-847-11	s	RESISTOR, CHIP 1K 1/10W (1608)
R801	1-218-847-11	s	RESISTOR, CHIP 1K 1/10W (1608)
R802	1-216-864-11	s	CONDUCTOR, CHIP (1608)
R803	1-216-864-11	s	CONDUCTOR, CHIP (1608)
R804	1-216-864-11	s	CONDUCTOR, CHIP (1608)
R805	1-218-847-11	s	RESISTOR, CHIP 1K 1/10W (1608)
R806	1-218-847-11	s	RESISTOR, CHIP 1K 1/10W (1608)
R807	1-218-847-11	s	RESISTOR, CHIP 1K 1/10W (1608)
R808	1-218-847-11	s	RESISTOR, CHIP 1K 1/10W (1608)
R809	1-218-847-11	s	RESISTOR, CHIP 1K 1/10W (1608)
R810	1-218-847-11	s	RESISTOR, CHIP 1K 1/10W (1608)
R811	1-211-985-11	s	RESISTOR,CHIP 47 1/10W (1608)
R812	1-218-847-11	s	RESISTOR, CHIP 1K 1/10W (1608)
R813	1-211-977-11	s	RESISTOR,CHIP 22 1/10W (1608)
R814	1-218-839-11	s	RESISTOR,CHIP 470 1/10W (1608)
R815	1-218-839-11	s	RESISTOR,CHIP 470 1/10W (1608)
R816	1-218-847-11	s	RESISTOR, CHIP 1K 1/10W (1608)
R817	1-218-832-11	s	RESISTOR,CHIP 240 1/10W (1608)
R818	1-218-856-11	s	RESISTOR,CHIP 2.4K 1/10W(1608)
R819	1-218-847-11	s	RESISTOR, CHIP 1K 1/10W (1608)
R820	1-218-827-11	s	RESISTOR,CHIP 150 1/10W (1608)
R821	1-218-827-11	s	RESISTOR,CHIP 150 1/10W (1608)
R824	1-218-879-11	s	RESISTOR,CHIP 22K 1/10W (1608)
R825	1-218-855-11	s	RESISTOR,CHIP 2.2K 1/10W(1608)
R826	1-218-865-11	s	RESISTOR,CHIP 5.6K 1/10W(1608)
R827	1-218-871-11	s	RESISTOR,CHIP 10K 1/10W (1608)
R828	1-216-863-11	s	RESISTOR,CHIP 3.3M 1/16W 1608
R829	1-218-827-11	s	RESISTOR,CHIP 150 1/10W (1608)
R830	1-218-827-11	s	RESISTOR,CHIP 150 1/10W (1608)
R831	1-218-855-11	s	RESISTOR,CHIP 2.2K 1/10W(1608)
R832	1-218-847-11	s	RESISTOR, CHIP 1K 1/10W (1608)
R833	1-218-847-11	s	RESISTOR, CHIP 1K 1/10W (1608)
R834	1-218-823-11	s	RESISTOR,CHIP 100 1/10W (1608)
R835	1-218-859-11	s	RESISTOR,CHIP 3.3K 1/10W(1608)
R836	1-218-823-11	s	RESISTOR,CHIP 100 1/10W (1608)
R837	1-218-855-11	s	RESISTOR,CHIP 2.2K 1/10W(1608)
R838	1-218-823-11	s	RESISTOR,CHIP 100 1/10W (1608)
R839	1-218-863-11	s	RESISTOR,CHIP 4.7K 1/10W(1608)
R840	1-218-858-11	s	RESISTOR, CHIP 3K 1/10W (1608)
R841	1-218-847-11	s	RESISTOR, CHIP 1K 1/10W (1608)

(HIF-1B BOARD [SUFFIX 22, 23] for BKMW-104)

Ref. No. or Q'ty	Part No.	SP	Description
R842	1-218-847-11	s	RESISTOR, CHIP 1K 1/10W (1608)
R843	1-218-847-11	s	RESISTOR, CHIP 1K 1/10W (1608)
R844	1-218-847-11	s	RESISTOR, CHIP 1K 1/10W (1608)
R845	1-216-864-11	s	CONDUCTOR, CHIP (1608)
R847	1-218-895-11	s	RESISTOR,CHIP 100K 1/10W(1608)
R848	1-218-895-11	s	RESISTOR,CHIP 100K 1/10W(1608)
R849	1-218-895-11	s	RESISTOR,CHIP 100K 1/10W(1608)
R850	1-218-871-11	s	RESISTOR,CHIP 10K 1/10W (1608)
R851	1-218-871-11	s	RESISTOR,CHIP 10K 1/10W (1608)
R852	1-218-871-11	s	RESISTOR,CHIP 10K 1/10W (1608)
R853	1-218-903-11	s	RESISTOR,CHIP 220K 1/10W(1608)
R854	1-218-871-11	s	RESISTOR,CHIP 10K 1/10W (1608)
R855	1-218-871-11	s	RESISTOR,CHIP 10K 1/10W (1608)
R857	1-218-871-11	s	RESISTOR,CHIP 10K 1/10W (1608)
R858	1-218-871-11	s	RESISTOR,CHIP 10K 1/10W (1608)
R859	1-218-831-11	s	RESISTOR, CHIP 220 1/10W(1608)
R860	1-218-839-11	s	RESISTOR,CHIP 470 1/10W (1608)
R861	1-218-839-11	s	RESISTOR,CHIP 470 1/10W (1608)
R862	1-211-985-11	s	RESISTOR,CHIP 47 1/10W (1608)
R863	1-211-985-11	s	RESISTOR,CHIP 47 1/10W (1608)
R864	1-211-985-11	s	RESISTOR,CHIP 47 1/10W (1608)
R865	1-211-985-11	s	RESISTOR,CHIP 47 1/10W (1608)
R866	1-211-985-11	s	RESISTOR,CHIP 47 1/10W (1608)
R867	1-211-985-11	s	RESISTOR,CHIP 47 1/10W (1608)
R868	1-211-985-11	s	RESISTOR,CHIP 47 1/10W (1608)
R869	1-211-985-11	s	RESISTOR,CHIP 47 1/10W (1608)
R900	1-218-895-11	s	RESISTOR,CHIP 100K 1/10W(1608)
R901	1-218-823-11	s	RESISTOR,CHIP 100 1/10W (1608)
R902	1-216-864-11	s	CONDUCTOR, CHIP (1608)
R904	1-216-864-11	s	CONDUCTOR, CHIP (1608)
R905	1-216-864-11	s	CONDUCTOR, CHIP (1608)
R906	1-216-864-11	s	CONDUCTOR, CHIP (1608)
R907	1-216-864-11	s	CONDUCTOR, CHIP (1608)
R908	1-218-863-11	s	RESISTOR,CHIP 4.7K 1/10W(1608)
R909	1-218-863-11	s	RESISTOR,CHIP 4.7K 1/10W(1608)
R910	1-218-895-11	s	RESISTOR,CHIP 100K 1/10W(1608)
R911	1-218-895-11	s	RESISTOR,CHIP 100K 1/10W(1608)
R912	1-218-895-11	s	RESISTOR,CHIP 100K 1/10W(1608)
R913	1-211-985-11	s	RESISTOR,CHIP 47 1/10W (1608)
R915	1-218-895-11	s	RESISTOR,CHIP 100K 1/10W(1608)
R916	1-218-895-11	s	RESISTOR,CHIP 100K 1/10W(1608)
R917	1-211-985-11	s	RESISTOR,CHIP 47 1/10W (1608)
R918	1-211-985-11	s	RESISTOR,CHIP 47 1/10W (1608)
R921 *2	1-216-864-11	s	CONDUCTOR, CHIP (1608)
R924	1-216-864-11	s	CONDUCTOR, CHIP (1608)
R925	1-216-864-11	s	CONDUCTOR, CHIP (1608)
R926	1-216-864-11	s	CONDUCTOR, CHIP (1608)
R927	1-218-895-11	s	RESISTOR,CHIP 100K 1/10W(1608)
R928	1-211-985-11	s	RESISTOR,CHIP 47 1/10W (1608)
R930	1-218-863-11	s	RESISTOR,CHIP 4.7K 1/10W(1608)
R931	1-218-863-11	s	RESISTOR,CHIP 4.7K 1/10W(1608)
R932	1-218-895-11	s	RESISTOR,CHIP 100K 1/10W(1608)
R933	1-218-895-11	s	RESISTOR,CHIP 100K 1/10W(1608)
R934	1-216-864-11	s	CONDUCTOR, CHIP (1608)
R936	1-211-985-11	s	RESISTOR,CHIP 47 1/10W (1608)
R940	1-216-864-11	s	CONDUCTOR, CHIP (1608)
R942	1-211-985-11	s	RESISTOR,CHIP 47 1/10W (1608)
R943	1-211-985-11	s	RESISTOR,CHIP 47 1/10W (1608)
R944	1-218-895-11	s	RESISTOR,CHIP 100K 1/10W(1608)

(HIF-1B BOARD [SUFFIX 22, 23] for BKMW-104)

Ref. No. or Q'ty	Part No.	SP	Description
R945	1-211-985-11	s	RESISTOR,CHIP 47 1/10W (1608)
R946	1-211-985-11	s	RESISTOR,CHIP 47 1/10W (1608)
R947	1-211-985-11	s	RESISTOR,CHIP 47 1/10W (1608)
R948	1-211-985-11	s	RESISTOR,CHIP 47 1/10W (1608)
R949	1-211-985-11	s	RESISTOR,CHIP 47 1/10W (1608)
R950	1-211-985-11	s	RESISTOR,CHIP 47 1/10W (1608)
R951	1-211-985-11	s	RESISTOR,CHIP 47 1/10W (1608)
R952	1-211-985-11	s	RESISTOR,CHIP 47 1/10W (1608)
R953	1-218-823-11	s	RESISTOR,CHIP 100 1/10W (1608)
R954	1-218-823-11	s	RESISTOR,CHIP 100 1/10W (1608)
R955	1-211-985-11	s	RESISTOR,CHIP 47 1/10W (1608)
R956	1-211-985-11	s	RESISTOR,CHIP 47 1/10W (1608)
R957	1-211-985-11	s	RESISTOR,CHIP 47 1/10W (1608)
R958	1-211-985-11	s	RESISTOR,CHIP 47 1/10W (1608)
R959	1-211-985-11	s	RESISTOR,CHIP 47 1/10W (1608)
R960	1-211-985-11	s	RESISTOR,CHIP 47 1/10W (1608)
R961	1-211-985-11	s	RESISTOR,CHIP 47 1/10W (1608)
R962	1-211-985-11	s	RESISTOR,CHIP 47 1/10W (1608)
R963	1-211-985-11	s	RESISTOR,CHIP 47 1/10W (1608)
R964	1-211-985-11	s	RESISTOR,CHIP 47 1/10W (1608)
R965	1-211-985-11	s	RESISTOR,CHIP 47 1/10W (1608)
R1000	1-219-610-11	s	RESISTOR, (SQUARE TYPE) 0.022
R1001	1-218-847-11	s	RESISTOR, CHIP 1K 1/10W (1608)
R1003	1-211-969-11	s	RESISTOR,CHIP 10 1/10W (1608)
R1004	1-211-969-11	s	RESISTOR,CHIP 10 1/10W (1608)
R1005	1-218-880-11	s	RESISTOR,CHIP 24K 1/10W (1608)
R1006	1-218-877-11	s	RESISTOR,CHIP 18K 1/10W (1608)
R1009	1-218-863-11	s	RESISTOR,CHIP 4.7K 1/10W(1608)
R1016	1-218-823-11	s	RESISTOR,CHIP 100 1/10W (1608)
R1021	1-218-863-11	s	RESISTOR,CHIP 4.7K 1/10W(1608)
R1022 *2	1-218-871-11	s	RESISTOR,CHIP 10K 1/10W (1608)
*1	1-218-870-11	s	RESISTOR,CHIP 9.1K 1/10W(1608)
R1023	1-218-871-11	s	RESISTOR,CHIP 10K 1/10W (1608)
R1026	1-211-969-11	s	RESISTOR,CHIP 10 1/10W (1608)
R1027	1-211-969-11	s	RESISTOR,CHIP 10 1/10W (1608)
R1028	1-219-610-11	s	RESISTOR, (SQUARE TYPE) 0.022
R1029	1-216-864-11	s	CONDUCTOR, CHIP (1608)
R1709	1-211-977-11	s	RESISTOR,CHIP 22 1/10W (1608)
R1710	1-211-977-11	s	RESISTOR,CHIP 22 1/10W (1608)
R1711	1-211-977-11	s	RESISTOR,CHIP 22 1/10W (1608)
R1713	1-211-977-11	s	RESISTOR,CHIP 22 1/10W (1608)
R1715	1-211-977-11	s	RESISTOR,CHIP 22 1/10W (1608)
R1716	1-211-977-11	s	RESISTOR,CHIP 22 1/10W (1608)
R1717	1-211-977-11	s	RESISTOR,CHIP 22 1/10W (1608)
R1718	1-211-985-11	s	RESISTOR,CHIP 47 1/10W (1608)
R1719 *2	1-211-985-11	s	RESISTOR,CHIP 47 1/10W (1608)
R1720	1-211-985-11	s	RESISTOR,CHIP 47 1/10W (1608)
R1723	1-211-985-11	s	RESISTOR,CHIP 47 1/10W (1608)
R1738	1-218-831-11	s	RESISTOR, CHIP 220 1/10W(1608)
R1740 *2	1-216-864-11	s	CONDUCTOR, CHIP (1608)
RB119	1-233-411-11	s	RESISTOR,CHIP NETWORK 220/3216
RB120	1-233-411-11	s	RESISTOR,CHIP NETWORK 220/3216
RB121	1-233-411-11	s	RESISTOR,CHIP NETWORK 220/3216
RB122	1-233-411-11	s	RESISTOR,CHIP NETWORK 220/3216
RB123	1-233-411-11	s	RESISTOR,CHIP NETWORK 220/3216
RB124	1-233-411-11	s	RESISTOR,CHIP NETWORK 220/3216
RB125	1-239-409-11	s	RESISTOR NETWORK 47 (1608)
RB126	1-239-409-11	s	RESISTOR NETWORK 47 (1608)
RB127	1-239-409-11	s	RESISTOR NETWORK 47 (1608)

(HIF-1B BOARD [SUFFIX 22, 23] for BKMW-104)

Ref. No. or Q'ty	Part No.	SP	Description
RB128	1-239-409-11	s	RESISTOR NETWORK 47 (1608)
RB129	1-239-409-11	s	RESISTOR NETWORK 47 (1608)
RB130	1-239-409-11	s	RESISTOR NETWORK 47 (1608)
RB204	1-239-409-11	s	RESISTOR NETWORK 47 (1608)
RB205	1-239-409-11	s	RESISTOR NETWORK 47 (1608)
RB206	1-239-409-11	s	RESISTOR NETWORK 47 (1608)
RB207	1-239-409-11	s	RESISTOR NETWORK 47 (1608)
RB208	1-239-409-11	s	RESISTOR NETWORK 47 (1608)
RB209	1-239-409-11	s	RESISTOR NETWORK 47 (1608)
RB210	1-239-409-11	s	RESISTOR NETWORK 47 (1608)
RB211	1-239-409-11	s	RESISTOR NETWORK 47 (1608)
RB212	1-239-409-11	s	RESISTOR NETWORK 47 (1608)
RB213	1-239-409-11	s	RESISTOR NETWORK 47 (1608)
RB214	1-239-409-11	s	RESISTOR NETWORK 47 (1608)
RB215	1-239-409-11	s	RESISTOR NETWORK 47 (1608)
RB220	1-239-409-11	s	RESISTOR NETWORK 47 (1608)
RB221	1-239-409-11	s	RESISTOR NETWORK 47 (1608)
RB222	1-239-409-11	s	RESISTOR NETWORK 47 (1608)
RB223	1-239-409-11	s	RESISTOR NETWORK 47 (1608)
RB224	1-236-908-11	s	RESISTOR,NETWORK 10K (3216)
RB300	1-239-409-11	s	RESISTOR NETWORK 47 (1608)
RB301	1-239-409-11	s	RESISTOR NETWORK 47 (1608)
RB302	1-239-409-11	s	RESISTOR NETWORK 47 (1608)
RB303	1-239-409-11	s	RESISTOR NETWORK 47 (1608)
RB304	1-239-409-11	s	RESISTOR NETWORK 47 (1608)
RB309	1-239-409-11	s	RESISTOR NETWORK 47 (1608)
RB400	1-233-575-11	s	RES, CHIP NETWORK 22
RB401	1-233-575-11	s	RES, CHIP NETWORK 22
RB402	1-233-575-11	s	RES, CHIP NETWORK 22
RB403	1-233-575-11	s	RES, CHIP NETWORK 22
RB404	1-233-575-11	s	RES, CHIP NETWORK 22
RB415	1-239-409-11	s	RESISTOR NETWORK 47 (1608)
RB416	1-239-409-11	s	RESISTOR NETWORK 47 (1608)
RB417	1-239-409-11	s	RESISTOR NETWORK 47 (1608)
RB418	1-239-409-11	s	RESISTOR NETWORK 47 (1608)
RB419	1-239-409-11	s	RESISTOR NETWORK 47 (1608)
RB505	1-233-575-11	s	RES, CHIP NETWORK 22
RB506	1-233-575-11	s	RES, CHIP NETWORK 22
RB507	1-233-575-11	s	RES, CHIP NETWORK 22
RB508	1-233-575-11	s	RES, CHIP NETWORK 22
RB509	1-233-575-11	s	RES, CHIP NETWORK 22
RB510	1-233-575-11	s	RES, CHIP NETWORK 22
RB511	1-233-575-11	s	RES, CHIP NETWORK 22
RB512	1-233-575-11	s	RES, CHIP NETWORK 22
RB513	1-233-575-11	s	RES, CHIP NETWORK 22
RB514	1-233-575-11	s	RES, CHIP NETWORK 22
RB515	1-233-575-11	s	RES, CHIP NETWORK 22
RB516	1-233-575-11	s	RES, CHIP NETWORK 22
RB700	1-233-810-21	s	RES, NETWORK 100K (3216)
RB704	1-233-575-11	s	RES, CHIP NETWORK 22
RB900	1-233-810-21	s	RES, NETWORK 100K (3216)
RB901	1-233-810-21	s	RES, NETWORK 100K (3216)
RB902	1-233-810-21	s	RES, NETWORK 100K (3216)
RB903	1-233-810-21	s	RES, NETWORK 100K (3216)
RB904	1-233-810-21	s	RES, NETWORK 100K (3216)
RB905	1-233-810-21	s	RES, NETWORK 100K (3216)
RB906	1-233-810-21	s	RES, NETWORK 100K (3216)
RB908	1-239-409-11	s	RESISTOR NETWORK 47 (1608)
RB909	1-239-409-11	s	RESISTOR NETWORK 47 (1608)

(HIF-1B BOARD [SUFFIX 22, 23] for BKMW-104)

Ref. No. or Q'ty	Part No.	SP	Description
RB910	1-239-409-11	s	RESISTOR NETWORK 47 (1608)
RB911	1-239-409-11	s	RESISTOR NETWORK 47 (1608)
RB912	1-239-409-11	s	RESISTOR NETWORK 47 (1608)
RB913	1-239-409-11	s	RESISTOR NETWORK 47 (1608)
RB914	1-239-409-11	s	RESISTOR NETWORK 47 (1608)
RB918	1-233-414-11	s	RESISTOR,CHIP NETWORK 4.7K
RB919	1-233-414-11	s	RESISTOR,CHIP NETWORK 4.7K
RB920	1-233-414-11	s	RESISTOR,CHIP NETWORK 4.7K
RB921	1-233-414-11	s	RESISTOR,CHIP NETWORK 4.7K
RB922	1-233-810-21	s	RES, NETWORK 100K (3216)
RB923	1-233-810-21	s	RES, NETWORK 100K (3216)
RB924	1-233-810-21	s	RES, NETWORK 100K (3216)
RB925	1-233-414-11	s	RESISTOR,CHIP NETWORK 4.7K
RB926	1-233-414-11	s	RESISTOR,CHIP NETWORK 4.7K
RB927	1-239-409-11	s	RESISTOR NETWORK 47 (1608)
RB928	1-239-409-11	s	RESISTOR NETWORK 47 (1608)
RB929	1-239-409-11	s	RESISTOR NETWORK 47 (1608)
RB930	1-239-409-11	s	RESISTOR NETWORK 47 (1608)
RB931	1-233-810-21	s	RES, NETWORK 100K (3216)
RB932	1-239-409-11	s	RESISTOR NETWORK 47 (1608)
RB933	1-239-409-11	s	RESISTOR NETWORK 47 (1608)
RB934	1-239-409-11	s	RESISTOR NETWORK 47 (1608)
RB935	1-233-810-21	s	RES, NETWORK 100K (3216)
RB1104	1-233-412-11	s	RESISTOR,CHIP NETWORK 1K
RB1105	1-233-412-11	s	RESISTOR,CHIP NETWORK 1K
RB1106	1-239-409-11	s	RESISTOR NETWORK 47 (1608)
RB1107	1-239-409-11	s	RESISTOR NETWORK 47 (1608)
RB1108	1-239-409-11	s	RESISTOR NETWORK 47 (1608)
RB1109	1-239-409-11	s	RESISTOR NETWORK 47 (1608)
RB1110	1-239-409-11	s	RESISTOR NETWORK 47 (1608)
RV800	1-241-261-41	s	RESISTOR, ADJ, CERMET 1K
RV801	1-241-261-41	s	RESISTOR, ADJ, CERMET 1K
S900	1-692-270-41	s	SWITCH, SLIDE
X800	1-767-694-11	s	OSCILLATOR, CRYSTAL
X801	1-781-496-11	s	OSCILLATOR, CRYSTAL
X802	1-781-671-11	s	OSCILLATOR, CRYSTAL
X803	1-781-672-11	s	OSCILLATOR, CRYSTAL
X804	1-781-830-11	s	OSCILLATOR, CRYSTAL
X805	1-781-831-11	s	OSCILLATOR, CRYSTAL

HIF-1B BOARD [SUFFIX 24-] for BKMW-104

[Lot No. 434 -] DVW-2000/P, M2000/P
[Lot No. 3C1 -] MSW-2000, M2000/P, A2000/P, M2100/P

Ref. No. or Q'ty	Part No.	SP	Description
1pc	A-8344-523-C	s	MOUNTED CIRCUIT BOARD, HIF-1B
C110	1-107-826-11	s	CAPACITOR,CHIP CERAMIC 0.1MF
C111	1-107-826-11	s	CAPACITOR,CHIP CERAMIC 0.1MF
C112	1-107-826-11	s	CAPACITOR,CHIP CERAMIC 0.1MF
C200	1-107-826-11	s	CAPACITOR,CHIP CERAMIC 0.1MF
C201	1-107-826-11	s	CAPACITOR,CHIP CERAMIC 0.1MF
C202	1-107-826-11	s	CAPACITOR,CHIP CERAMIC 0.1MF
C203	1-107-826-11	s	CAPACITOR,CHIP CERAMIC 0.1MF
C204	1-107-826-11	s	CAPACITOR,CHIP CERAMIC 0.1MF
C205	1-107-826-11	s	CAPACITOR,CHIP CERAMIC 0.1MF
C206	1-127-692-11	s	CAP, CHIP CERAMIC 10MF B 3216
C207	1-107-826-11	s	CAPACITOR,CHIP CERAMIC 0.1MF
C208	1-107-826-11	s	CAPACITOR,CHIP CERAMIC 0.1MF
C209	1-107-826-11	s	CAPACITOR,CHIP CERAMIC 0.1MF
C210	1-107-826-11	s	CAPACITOR,CHIP CERAMIC 0.1MF
C211	1-127-692-11	s	CAP, CHIP CERAMIC 10MF B 3216
C212	1-107-826-11	s	CAPACITOR,CHIP CERAMIC 0.1MF
C213	1-107-826-11	s	CAPACITOR,CHIP CERAMIC 0.1MF
C214	1-107-826-11	s	CAPACITOR,CHIP CERAMIC 0.1MF
C215	1-107-826-11	s	CAPACITOR,CHIP CERAMIC 0.1MF
C216	1-107-826-11	s	CAPACITOR,CHIP CERAMIC 0.1MF
C217	1-107-826-11	s	CAPACITOR,CHIP CERAMIC 0.1MF
C218	1-107-826-11	s	CAPACITOR,CHIP CERAMIC 0.1MF
C219	1-107-826-11	s	CAPACITOR,CHIP CERAMIC 0.1MF
C220	1-107-826-11	s	CAPACITOR,CHIP CERAMIC 0.1MF
C221	1-107-826-11	s	CAPACITOR,CHIP CERAMIC 0.1MF
C222	1-107-826-11	s	CAPACITOR,CHIP CERAMIC 0.1MF
C223	1-107-826-11	s	CAPACITOR,CHIP CERAMIC 0.1MF
C226	1-127-692-11	s	CAP, CHIP CERAMIC 10MF B 3216
C227	1-125-889-11	s	CAPACITOR, CERAMIC 2.2MF
C228	1-125-889-11	s	CAPACITOR, CERAMIC 2.2MF
C229	1-107-826-11	s	CAPACITOR,CHIP CERAMIC 0.1MF
C232	1-127-692-11	s	CAP, CHIP CERAMIC 10MF B 3216
C233	1-127-692-11	s	CAP, CHIP CERAMIC 10MF B 3216
C234	1-127-692-11	s	CAP, CHIP CERAMIC 10MF B 3216
C235	1-127-692-11	s	CAP, CHIP CERAMIC 10MF B 3216
C300	1-107-826-11	s	CAPACITOR,CHIP CERAMIC 0.1MF
C301	1-107-826-11	s	CAPACITOR,CHIP CERAMIC 0.1MF
C302	1-107-826-11	s	CAPACITOR,CHIP CERAMIC 0.1MF
C303	1-107-826-11	s	CAPACITOR,CHIP CERAMIC 0.1MF
C304	1-107-826-11	s	CAPACITOR,CHIP CERAMIC 0.1MF
C305	1-107-826-11	s	CAPACITOR,CHIP CERAMIC 0.1MF
C306	1-107-826-11	s	CAPACITOR,CHIP CERAMIC 0.1MF
C307	1-107-826-11	s	CAPACITOR,CHIP CERAMIC 0.1MF
C308	1-107-826-11	s	CAPACITOR,CHIP CERAMIC 0.1MF
C309	1-107-826-11	s	CAPACITOR,CHIP CERAMIC 0.1MF
C310	1-107-826-11	s	CAPACITOR,CHIP CERAMIC 0.1MF
C311	1-107-826-11	s	CAPACITOR,CHIP CERAMIC 0.1MF
C312	1-107-826-11	s	CAPACITOR,CHIP CERAMIC 0.1MF
C313	1-107-826-11	s	CAPACITOR,CHIP CERAMIC 0.1MF
C314	1-107-826-11	s	CAPACITOR,CHIP CERAMIC 0.1MF
C315	1-107-826-11	s	CAPACITOR,CHIP CERAMIC 0.1MF
C316	1-107-826-11	s	CAPACITOR,CHIP CERAMIC 0.1MF
C317	1-107-826-11	s	CAPACITOR,CHIP CERAMIC 0.1MF
C318	1-107-826-11	s	CAPACITOR,CHIP CERAMIC 0.1MF
C319	1-107-826-11	s	CAPACITOR,CHIP CERAMIC 0.1MF

(HIF-1B BOARD [SUFFIX 24-] for BKMW-104)

Ref. No. or Q'ty	Part No.	SP	Description
C320	1-107-826-11	s	CAPACITOR,CHIP CERAMIC 0.1MF
C321	1-107-826-11	s	CAPACITOR,CHIP CERAMIC 0.1MF
C322	1-107-826-11	s	CAPACITOR,CHIP CERAMIC 0.1MF
C323	1-107-826-11	s	CAPACITOR,CHIP CERAMIC 0.1MF
C324	1-107-826-11	s	CAPACITOR,CHIP CERAMIC 0.1MF
C325	1-107-826-11	s	CAPACITOR,CHIP CERAMIC 0.1MF
C326	1-107-826-11	s	CAPACITOR,CHIP CERAMIC 0.1MF
C327	1-107-826-11	s	CAPACITOR,CHIP CERAMIC 0.1MF
C328	1-107-826-11	s	CAPACITOR,CHIP CERAMIC 0.1MF
C329	1-127-692-11	s	CAP, CHIP CERAMIC 10MF B 3216
C330	1-165-870-21	s	CAPACITOR, ELECT 100MF(6.3X6)
C331	1-107-826-11	s	CAPACITOR,CHIP CERAMIC 0.1MF
C332	1-107-826-11	s	CAPACITOR,CHIP CERAMIC 0.1MF
C333	1-107-826-11	s	CAPACITOR,CHIP CERAMIC 0.1MF
C334	1-107-826-11	s	CAPACITOR,CHIP CERAMIC 0.1MF
C335	1-107-826-11	s	CAPACITOR,CHIP CERAMIC 0.1MF
C336	1-107-826-11	s	CAPACITOR,CHIP CERAMIC 0.1MF
C337	1-107-826-11	s	CAPACITOR,CHIP CERAMIC 0.1MF
C338	1-107-826-11	s	CAPACITOR,CHIP CERAMIC 0.1MF
C339	1-107-826-11	s	CAPACITOR,CHIP CERAMIC 0.1MF
C340	1-107-826-11	s	CAPACITOR,CHIP CERAMIC 0.1MF
C341	1-107-826-11	s	CAPACITOR,CHIP CERAMIC 0.1MF
C342	1-107-826-11	s	CAPACITOR,CHIP CERAMIC 0.1MF
C343	1-107-826-11	s	CAPACITOR,CHIP CERAMIC 0.1MF
C344	1-107-826-11	s	CAPACITOR,CHIP CERAMIC 0.1MF
C345	1-107-826-11	s	CAPACITOR,CHIP CERAMIC 0.1MF
C346	1-107-826-11	s	CAPACITOR,CHIP CERAMIC 0.1MF
C347	1-107-826-11	s	CAPACITOR,CHIP CERAMIC 0.1MF
C348	1-164-227-11	s	CAPACITOR,CERAMIC 0.022MF/25V
C351	1-127-692-11	s	CAP, CHIP CERAMIC 10MF B 3216
C352	1-127-692-11	s	CAP, CHIP CERAMIC 10MF B 3216
C353	1-127-692-11	s	CAP, CHIP CERAMIC 10MF B 3216
C354	1-127-692-11	s	CAP, CHIP CERAMIC 10MF B 3216
C355	1-127-692-11	s	CAP, CHIP CERAMIC 10MF B 3216
C356	1-127-692-11	s	CAP, CHIP CERAMIC 10MF B 3216
C358	1-127-692-11	s	CAP, CHIP CERAMIC 10MF B 3216
C359	1-127-692-11	s	CAP, CHIP CERAMIC 10MF B 3216
C360	1-127-692-11	s	CAP, CHIP CERAMIC 10MF B 3216
C361	1-127-692-11	s	CAP, CHIP CERAMIC 10MF B 3216
C527	1-107-826-11	s	CAPACITOR,CHIP CERAMIC 0.1MF
C528	1-107-826-11	s	CAPACITOR,CHIP CERAMIC 0.1MF
C529	1-107-826-11	s	CAPACITOR,CHIP CERAMIC 0.1MF
C530	1-107-826-11	s	CAPACITOR,CHIP CERAMIC 0.1MF
C531	1-107-826-11	s	CAPACITOR,CHIP CERAMIC 0.1MF
C532	1-107-826-11	s	CAPACITOR,CHIP CERAMIC 0.1MF
C533	1-107-826-11	s	CAPACITOR,CHIP CERAMIC 0.1MF
C534	1-107-826-11	s	CAPACITOR,CHIP CERAMIC 0.1MF
C535	1-107-826-11	s	CAPACITOR,CHIP CERAMIC 0.1MF
C536	1-107-826-11	s	CAPACITOR,CHIP CERAMIC 0.1MF
C537	1-107-826-11	s	CAPACITOR,CHIP CERAMIC 0.1MF
C538	1-127-692-11	s	CAP, CHIP CERAMIC 10MF B 3216
C539	1-127-692-11	s	CAP, CHIP CERAMIC 10MF B 3216
C540	1-107-826-11	s	CAPACITOR,CHIP CERAMIC 0.1MF
C541	1-107-826-11	s	CAPACITOR,CHIP CERAMIC 0.1MF
C542	1-107-826-11	s	CAPACITOR,CHIP CERAMIC 0.1MF
C543	1-107-826-11	s	CAPACITOR,CHIP CERAMIC 0.1MF
C544	1-107-826-11	s	CAPACITOR,CHIP CERAMIC 0.1MF
C545	1-107-826-11	s	CAPACITOR,CHIP CERAMIC 0.1MF
C546	1-107-826-11	s	CAPACITOR,CHIP CERAMIC 0.1MF

(HIF-1B BOARD [SUFFIX 24-] for BKMW-104)

Ref. No. or Q'ty	Part No.	SP	Description
C547	1-107-826-11	s	CAPACITOR,CHIP CERAMIC 0.1MF
C548	1-107-826-11	s	CAPACITOR,CHIP CERAMIC 0.1MF
C549	1-107-826-11	s	CAPACITOR,CHIP CERAMIC 0.1MF
C550	1-107-826-11	s	CAPACITOR,CHIP CERAMIC 0.1MF
C551	1-107-826-11	s	CAPACITOR,CHIP CERAMIC 0.1MF
C552	1-107-826-11	s	CAPACITOR,CHIP CERAMIC 0.1MF
C553	1-107-826-11	s	CAPACITOR,CHIP CERAMIC 0.1MF
C555	1-127-692-11	s	CAP, CHIP CERAMIC 10MF B 3216
C556	1-127-692-11	s	CAP, CHIP CERAMIC 10MF B 3216
C557	1-127-692-11	s	CAP, CHIP CERAMIC 10MF B 3216
C558	1-127-692-11	s	CAP, CHIP CERAMIC 10MF B 3216
C559	1-127-692-11	s	CAP, CHIP CERAMIC 10MF B 3216
C560	1-127-692-11	s	CAP, CHIP CERAMIC 10MF B 3216
C701	1-107-826-11	s	CAPACITOR,CHIP CERAMIC 0.1MF
C702	1-107-826-11	s	CAPACITOR,CHIP CERAMIC 0.1MF
C704	1-107-826-11	s	CAPACITOR,CHIP CERAMIC 0.1MF
C705	1-107-826-11	s	CAPACITOR,CHIP CERAMIC 0.1MF
C706	1-107-826-11	s	CAPACITOR,CHIP CERAMIC 0.1MF
C707	1-107-826-11	s	CAPACITOR,CHIP CERAMIC 0.1MF
C708	1-127-692-11	s	CAP, CHIP CERAMIC 10MF B 3216
C709	1-107-826-11	s	CAPACITOR,CHIP CERAMIC 0.1MF
C710	1-107-826-11	s	CAPACITOR,CHIP CERAMIC 0.1MF
C711	1-107-826-11	s	CAPACITOR,CHIP CERAMIC 0.1MF
C713	1-127-692-11	s	CAP, CHIP CERAMIC 10MF B 3216
C714	1-107-826-11	s	CAPACITOR,CHIP CERAMIC 0.1MF
C719	1-107-826-11	s	CAPACITOR,CHIP CERAMIC 0.1MF
C721	1-107-826-11	s	CAPACITOR,CHIP CERAMIC 0.1MF
C722	1-107-826-11	s	CAPACITOR,CHIP CERAMIC 0.1MF
C724	1-107-826-11	s	CAPACITOR,CHIP CERAMIC 0.1MF
C727	1-107-826-11	s	CAPACITOR,CHIP CERAMIC 0.1MF
C728	1-107-826-11	s	CAPACITOR,CHIP CERAMIC 0.1MF
C730	1-107-826-11	s	CAPACITOR,CHIP CERAMIC 0.1MF
C733	1-127-692-11	s	CAP, CHIP CERAMIC 10MF B 3216
C734	1-127-692-11	s	CAP, CHIP CERAMIC 10MF B 3216
C746	1-162-970-11	s	CAPACITOR CERAMIC 0.01MF/25V B
C747	1-107-826-11	s	CAPACITOR,CHIP CERAMIC 0.1MF
C800	1-165-870-21	s	CAPACITOR, ELECT 100MF(6.3X6)
C801	1-165-870-21	s	CAPACITOR, ELECT 100MF(6.3X6)
C802	1-107-826-11	s	CAPACITOR,CHIP CERAMIC 0.1MF
C803	1-107-826-11	s	CAPACITOR,CHIP CERAMIC 0.1MF
C804	1-107-826-11	s	CAPACITOR,CHIP CERAMIC 0.1MF
C805	1-107-826-11	s	CAPACITOR,CHIP CERAMIC 0.1MF
C806	1-107-826-11	s	CAPACITOR,CHIP CERAMIC 0.1MF
C807	1-107-826-11	s	CAPACITOR,CHIP CERAMIC 0.1MF
C808	1-107-826-11	s	CAPACITOR,CHIP CERAMIC 0.1MF
C809	1-107-826-11	s	CAPACITOR,CHIP CERAMIC 0.1MF
C810	1-107-826-11	s	CAPACITOR,CHIP CERAMIC 0.1MF
C811	1-107-826-11	s	CAPACITOR,CHIP CERAMIC 0.1MF
C812	1-107-826-11	s	CAPACITOR,CHIP CERAMIC 0.1MF
C813	1-107-826-11	s	CAPACITOR,CHIP CERAMIC 0.1MF
C814	1-107-826-11	s	CAPACITOR,CHIP CERAMIC 0.1MF
C815	1-107-826-11	s	CAPACITOR,CHIP CERAMIC 0.1MF
C816	1-107-826-11	s	CAPACITOR,CHIP CERAMIC 0.1MF
C817	1-107-826-11	s	CAPACITOR,CHIP CERAMIC 0.1MF
C818	1-107-826-11	s	CAPACITOR,CHIP CERAMIC 0.1MF
C819	1-107-826-11	s	CAPACITOR,CHIP CERAMIC 0.1MF
C820	1-107-826-11	s	CAPACITOR,CHIP CERAMIC 0.1MF
C821	1-107-826-11	s	CAPACITOR,CHIP CERAMIC 0.1MF
C822	1-107-826-11	s	CAPACITOR,CHIP CERAMIC 0.1MF

(HIF-1B BOARD [SUFFIX 24-] for BKMW-104)

Ref. No. or Q'ty	Part No.	SP	Description
C823	1-107-826-11	s	CAPACITOR,CHIP CERAMIC 0.1MF
C824	1-107-826-11	s	CAPACITOR,CHIP CERAMIC 0.1MF
C825	1-107-826-11	s	CAPACITOR,CHIP CERAMIC 0.1MF
C826	1-107-826-11	s	CAPACITOR,CHIP CERAMIC 0.1MF
C827	1-107-826-11	s	CAPACITOR,CHIP CERAMIC 0.1MF
C828	1-107-826-11	s	CAPACITOR,CHIP CERAMIC 0.1MF
C829	1-107-826-11	s	CAPACITOR,CHIP CERAMIC 0.1MF
C830	1-107-826-11	s	CAPACITOR,CHIP CERAMIC 0.1MF
C831	1-107-826-11	s	CAPACITOR,CHIP CERAMIC 0.1MF
C832	1-107-826-11	s	CAPACITOR,CHIP CERAMIC 0.1MF
C833	1-107-826-11	s	CAPACITOR,CHIP CERAMIC 0.1MF
C834	1-107-826-11	s	CAPACITOR,CHIP CERAMIC 0.1MF
C835	1-107-826-11	s	CAPACITOR,CHIP CERAMIC 0.1MF
C836	1-107-826-11	s	CAPACITOR,CHIP CERAMIC 0.1MF
C837	1-107-826-11	s	CAPACITOR,CHIP CERAMIC 0.1MF
C838	1-162-919-11	s	CAPACITOR,CERAMIC 22PF/50V CH
C839	1-162-928-11	s	CAPACITOR,CERAMIC 120PF/50V CH
C840	1-107-826-11	s	CAPACITOR,CHIP CERAMIC 0.1MF
C841	1-107-826-11	s	CAPACITOR,CHIP CERAMIC 0.1MF
C842	1-107-826-11	s	CAPACITOR,CHIP CERAMIC 0.1MF
C843	1-125-891-11	s	CAPACITOR CERAMIC 0.47MF/10V
C844	1-125-891-11	s	CAPACITOR CERAMIC 0.47MF/10V
C845	1-107-826-11	s	CAPACITOR,CHIP CERAMIC 0.1MF
C846	1-107-826-11	s	CAPACITOR,CHIP CERAMIC 0.1MF
C847	1-107-826-11	s	CAPACITOR,CHIP CERAMIC 0.1MF
C848	1-162-923-11	s	CAPACITOR,CERAMIC 47PF/50V CH
C849	1-162-970-11	s	CAPACITOR CERAMIC 0.01MF/25V B
C850	1-107-826-11	s	CAPACITOR,CHIP CERAMIC 0.1MF
C851	1-162-928-11	s	CAPACITOR,CERAMIC 120PF/50V CH
C852	1-107-826-11	s	CAPACITOR,CHIP CERAMIC 0.1MF
C853	1-162-927-11	s	CAPACITOR,CERAMIC 100PF/50V CH
C854	1-107-826-11	s	CAPACITOR,CHIP CERAMIC 0.1MF
C855	1-162-923-11	s	CAPACITOR,CERAMIC 47PF/50V CH
C856	1-107-826-11	s	CAPACITOR,CHIP CERAMIC 0.1MF
C857	1-107-826-11	s	CAPACITOR,CHIP CERAMIC 0.1MF
C858	1-162-924-11	s	CAPACITOR,CERAMIC 56PF/50V CH
C859	1-107-826-11	s	CAPACITOR,CHIP CERAMIC 0.1MF
C860	1-107-826-11	s	CAPACITOR,CHIP CERAMIC 0.1MF
C861	1-107-826-11	s	CAPACITOR,CHIP CERAMIC 0.1MF
C862	1-162-928-11	s	CAPACITOR,CERAMIC 120PF/50V CH
C863	1-107-826-11	s	CAPACITOR,CHIP CERAMIC 0.1MF
C864	1-162-928-11	s	CAPACITOR,CERAMIC 120PF/50V CH
C865	1-127-950-11	s	CAPACITOR,CHIP FILM 0.01MF
C866	1-127-950-11	s	CAPACITOR,CHIP FILM 0.01MF
C867	1-127-950-11	s	CAPACITOR,CHIP FILM 0.01MF
C868	1-127-956-11	s	CAPACITOR,CHIP FILM 0.1MF
C869	1-127-956-11	s	CAPACITOR,CHIP FILM 0.1MF
C870	1-127-956-11	s	CAPACITOR,CHIP FILM 0.1MF
C871	1-127-950-11	s	CAPACITOR,CHIP FILM 0.01MF
C872	1-127-956-11	s	CAPACITOR,CHIP FILM 0.1MF
C873	1-107-826-11	s	CAPACITOR,CHIP CERAMIC 0.1MF
C874	1-107-826-11	s	CAPACITOR,CHIP CERAMIC 0.1MF
C875	1-107-826-11	s	CAPACITOR,CHIP CERAMIC 0.1MF
C876	1-107-826-11	s	CAPACITOR,CHIP CERAMIC 0.1MF
C877	1-107-826-11	s	CAPACITOR,CHIP CERAMIC 0.1MF
C878	1-107-826-11	s	CAPACITOR,CHIP CERAMIC 0.1MF
C879	1-107-826-11	s	CAPACITOR,CHIP CERAMIC 0.1MF
C880	1-107-826-11	s	CAPACITOR,CHIP CERAMIC 0.1MF
C881	1-107-826-11	s	CAPACITOR,CHIP CERAMIC 0.1MF

(HIF-1B BOARD [SUFFIX 24-] for BKMW-104)

Ref. No. or Q'ty	Part No.	SP	Description
C882	1-107-826-11	s	CAPACITOR,CHIP CERAMIC 0.1MF
C883	1-107-826-11	s	CAPACITOR,CHIP CERAMIC 0.1MF
C884	1-107-826-11	s	CAPACITOR,CHIP CERAMIC 0.1MF
C885	1-127-692-11	s	CAP, CHIP CERAMIC 10MF B 3216
C886	1-107-826-11	s	CAPACITOR,CHIP CERAMIC 0.1MF
C887	1-107-826-11	s	CAPACITOR,CHIP CERAMIC 0.1MF
C888	1-107-826-11	s	CAPACITOR,CHIP CERAMIC 0.1MF
C889	1-107-826-11	s	CAPACITOR,CHIP CERAMIC 0.1MF
C890	1-107-826-11	s	CAPACITOR,CHIP CERAMIC 0.1MF
C891	1-107-826-11	s	CAPACITOR,CHIP CERAMIC 0.1MF
C892	1-107-826-11	s	CAPACITOR,CHIP CERAMIC 0.1MF
C893	1-107-826-11	s	CAPACITOR,CHIP CERAMIC 0.1MF
C894	1-107-826-11	s	CAPACITOR,CHIP CERAMIC 0.1MF
C895	1-107-826-11	s	CAPACITOR,CHIP CERAMIC 0.1MF
C896	1-107-826-11	s	CAPACITOR,CHIP CERAMIC 0.1MF
C897	1-107-826-11	s	CAPACITOR,CHIP CERAMIC 0.1MF
C898	1-107-826-11	s	CAPACITOR,CHIP CERAMIC 0.1MF
C899	1-107-826-11	s	CAPACITOR,CHIP CERAMIC 0.1MF
C900	1-162-970-11	s	CAPACITOR CERAMIC 0.01MF/25V B
C901	1-107-826-11	s	CAPACITOR,CHIP CERAMIC 0.1MF
C902	1-107-826-11	s	CAPACITOR,CHIP CERAMIC 0.1MF
C903	1-107-826-11	s	CAPACITOR,CHIP CERAMIC 0.1MF
C904	1-107-826-11	s	CAPACITOR,CHIP CERAMIC 0.1MF
C905	1-107-826-11	s	CAPACITOR,CHIP CERAMIC 0.1MF
C906	1-107-826-11	s	CAPACITOR,CHIP CERAMIC 0.1MF
C907	1-107-826-11	s	CAPACITOR,CHIP CERAMIC 0.1MF
C908	1-107-826-11	s	CAPACITOR,CHIP CERAMIC 0.1MF
C909	1-107-826-11	s	CAPACITOR,CHIP CERAMIC 0.1MF
C910	1-107-826-11	s	CAPACITOR,CHIP CERAMIC 0.1MF
C911	1-107-826-11	s	CAPACITOR,CHIP CERAMIC 0.1MF
C912	1-107-826-11	s	CAPACITOR,CHIP CERAMIC 0.1MF
C913	1-107-826-11	s	CAPACITOR,CHIP CERAMIC 0.1MF
C914	1-107-826-11	s	CAPACITOR,CHIP CERAMIC 0.1MF
C915	1-107-826-11	s	CAPACITOR,CHIP CERAMIC 0.1MF
C916	1-107-826-11	s	CAPACITOR,CHIP CERAMIC 0.1MF
C917	1-107-826-11	s	CAPACITOR,CHIP CERAMIC 0.1MF
C918	1-107-826-11	s	CAPACITOR,CHIP CERAMIC 0.1MF
C919	1-107-826-11	s	CAPACITOR,CHIP CERAMIC 0.1MF
C920	1-107-826-11	s	CAPACITOR,CHIP CERAMIC 0.1MF
C921	1-127-692-11	s	CAP, CHIP CERAMIC 10MF B 3216
C922	1-127-692-11	s	CAP, CHIP CERAMIC 10MF B 3216
C923	1-107-826-11	s	CAPACITOR,CHIP CERAMIC 0.1MF
C924	1-127-692-11	s	CAP, CHIP CERAMIC 10MF B 3216
C925	1-162-927-11	s	CAPACITOR,CERAMIC 100PF/50V CH
C926	1-162-927-11	s	CAPACITOR,CERAMIC 100PF/50V CH
C927	1-162-927-11	s	CAPACITOR,CERAMIC 100PF/50V CH
C928	1-127-692-11	s	CAP, CHIP CERAMIC 10MF B 3216
C929	1-127-692-11	s	CAP, CHIP CERAMIC 10MF B 3216
C930	1-127-692-11	s	CAP, CHIP CERAMIC 10MF B 3216
C931	1-127-692-11	s	CAP, CHIP CERAMIC 10MF B 3216
C932	1-127-692-11	s	CAP, CHIP CERAMIC 10MF B 3216
C933	1-107-826-11	s	CAPACITOR,CHIP CERAMIC 0.1MF
C934	1-107-826-11	s	CAPACITOR,CHIP CERAMIC 0.1MF
C935	1-107-826-11	s	CAPACITOR,CHIP CERAMIC 0.1MF
C936	1-107-826-11	s	CAPACITOR,CHIP CERAMIC 0.1MF
C937	1-107-826-11	s	CAPACITOR,CHIP CERAMIC 0.1MF
C938	1-107-826-11	s	CAPACITOR,CHIP CERAMIC 0.1MF
C939	1-107-826-11	s	CAPACITOR,CHIP CERAMIC 0.1MF
C940	1-107-826-11	s	CAPACITOR,CHIP CERAMIC 0.1MF

(HIF-1B BOARD [SUFFIX 24-] for BKMW-104)

Ref. No. or Q'ty	Part No.	SP	Description
C941	1-107-826-11	s	CAPACITOR,CHIP CERAMIC 0.1MF
C942	1-107-826-11	s	CAPACITOR,CHIP CERAMIC 0.1MF
C943	1-107-826-11	s	CAPACITOR,CHIP CERAMIC 0.1MF
C944	1-107-826-11	s	CAPACITOR,CHIP CERAMIC 0.1MF
C945	1-107-826-11	s	CAPACITOR,CHIP CERAMIC 0.1MF
C946	1-107-826-11	s	CAPACITOR,CHIP CERAMIC 0.1MF
C981	1-107-826-11	s	CAPACITOR,CHIP CERAMIC 0.1MF
C1000	1-127-692-11	s	CAP, CHIP CERAMIC 10MF B 3216
C1001	1-127-692-11	s	CAP, CHIP CERAMIC 10MF B 3216
C1002	1-127-692-11	s	CAP, CHIP CERAMIC 10MF B 3216
C1003	1-107-826-11	s	CAPACITOR,CHIP CERAMIC 0.1MF
C1004	1-107-826-11	s	CAPACITOR,CHIP CERAMIC 0.1MF
C1005	1-107-826-11	s	CAPACITOR,CHIP CERAMIC 0.1MF
C1006	1-107-826-11	s	CAPACITOR,CHIP CERAMIC 0.1MF
C1007	1-107-826-11	s	CAPACITOR,CHIP CERAMIC 0.1MF
C1008	1-107-826-11	s	CAPACITOR,CHIP CERAMIC 0.1MF
C1009	1-107-826-11	s	CAPACITOR,CHIP CERAMIC 0.1MF
C1010	1-107-826-11	s	CAPACITOR,CHIP CERAMIC 0.1MF
C1011	1-107-826-11	s	CAPACITOR,CHIP CERAMIC 0.1MF
C1012	1-107-826-11	s	CAPACITOR,CHIP CERAMIC 0.1MF
C1013	1-127-692-11	s	CAP, CHIP CERAMIC 10MF B 3216
C1014	1-127-692-11	s	CAP, CHIP CERAMIC 10MF B 3216
C1015	1-165-870-21	s	CAPACITOR, ELECT 100MF(6.3X6)
C1016	1-127-692-11	s	CAP, CHIP CERAMIC 10MF B 3216
C1017	1-165-870-21	s	CAPACITOR, ELECT 100MF(6.3X6)
C1018	1-127-692-11	s	CAP, CHIP CERAMIC 10MF B 3216
C1019	1-135-342-11	s	CAPACITOR,SOLID ELECT 56MF
C1020	1-127-692-11	s	CAP, CHIP CERAMIC 10MF B 3216
C1022	1-162-970-11	s	CAPACITOR CERAMIC 0.01MF/25V B
C1023	1-127-692-11	s	CAP, CHIP CERAMIC 10MF B 3216
C1024	1-127-692-11	s	CAP, CHIP CERAMIC 10MF B 3216
C1025	1-107-826-11	s	CAPACITOR,CHIP CERAMIC 0.1MF
C1026	1-107-826-11	s	CAPACITOR,CHIP CERAMIC 0.1MF
C1027	1-127-692-11	s	CAP, CHIP CERAMIC 10MF B 3216
C1028	1-127-692-11	s	CAP, CHIP CERAMIC 10MF B 3216
C1029	1-115-416-11	s	CAPACITOR,CERAMIC 1000PF/25V
C1030	1-127-692-11	s	CAP, CHIP CERAMIC 10MF B 3216
C1031	1-107-826-11	s	CAPACITOR,CHIP CERAMIC 0.1MF
C1032	1-107-826-11	s	CAPACITOR,CHIP CERAMIC 0.1MF
C1033	1-125-889-11	s	CAPACITOR, CERAMIC 2.2MF
C1034	1-107-826-11	s	CAPACITOR,CHIP CERAMIC 0.1MF
C1035	1-127-692-11	s	CAP, CHIP CERAMIC 10MF B 3216
C1036	1-127-692-11	s	CAP, CHIP CERAMIC 10MF B 3216
C1037	1-115-416-11	s	CAPACITOR,CERAMIC 1000PF/25V
C1038	1-162-970-11	s	CAPACITOR CERAMIC 0.01MF/25V B
C1040	1-127-692-11	s	CAP, CHIP CERAMIC 10MF B 3216
C1041	1-127-692-11	s	CAP, CHIP CERAMIC 10MF B 3216
C1042	1-107-826-11	s	CAPACITOR,CHIP CERAMIC 0.1MF
C1043	1-135-342-11	s	CAPACITOR,SOLID ELECT 56MF
C1044	1-107-826-11	s	CAPACITOR,CHIP CERAMIC 0.1MF
C1064	1-135-342-11	s	CAPACITOR,SOLID ELECT 56MF
C1065	1-165-870-21	s	CAPACITOR, ELECT 100MF(6.3X6)
C1066	1-165-870-21	s	CAPACITOR, ELECT 100MF(6.3X6)
C1067	1-127-692-11	s	CAP, CHIP CERAMIC 10MF B 3216
C1068	1-127-692-11	s	CAP, CHIP CERAMIC 10MF B 3216
C1069	1-127-692-11	s	CAP, CHIP CERAMIC 10MF B 3216
C1070	1-127-692-11	s	CAP, CHIP CERAMIC 10MF B 3216
C1071	1-127-692-11	s	CAP, CHIP CERAMIC 10MF B 3216
C1072	1-127-692-11	s	CAP, CHIP CERAMIC 10MF B 3216

(HIF-1B BOARD [SUFFIX 24-] for BKMW-104)

Ref. No. or Q'ty	Part No.	SP	Description
C1100	1-107-826-11	s	CAPACITOR,CHIP CERAMIC 0.1MF
C1101	1-107-826-11	s	CAPACITOR,CHIP CERAMIC 0.1MF
C1102	1-107-826-11	s	CAPACITOR,CHIP CERAMIC 0.1MF
C1103	1-107-826-11	s	CAPACITOR,CHIP CERAMIC 0.1MF
C1104	1-107-826-11	s	CAPACITOR,CHIP CERAMIC 0.1MF
C1105	1-107-826-11	s	CAPACITOR,CHIP CERAMIC 0.1MF
C1106	1-107-826-11	s	CAPACITOR,CHIP CERAMIC 0.1MF
C1800	1-107-826-11	s	CAPACITOR,CHIP CERAMIC 0.1MF
C1801	1-107-826-11	s	CAPACITOR,CHIP CERAMIC 0.1MF
C1802	1-107-826-11	s	CAPACITOR,CHIP CERAMIC 0.1MF
C1803	1-107-826-11	s	CAPACITOR,CHIP CERAMIC 0.1MF
C1804	1-107-826-11	s	CAPACITOR,CHIP CERAMIC 0.1MF
C1805	1-107-826-11	s	CAPACITOR,CHIP CERAMIC 0.1MF
C1806	1-165-870-21	s	CAPACITOR, ELECT 100MF(6.3X6)
C1808	1-127-692-11	s	CAP, CHIP CERAMIC 10MF B 3216
C1809	1-127-692-11	s	CAP, CHIP CERAMIC 10MF B 3216
C1810	1-127-692-11	s	CAP, CHIP CERAMIC 10MF B 3216
C1811	1-127-692-11	s	CAP, CHIP CERAMIC 10MF B 3216
CN200	1-580-789-91	s	PIN, CONNECTOR 6P
D700	8-719-820-41	s	DIODE 1SS302
D1000	8-719-066-98	s	DIODE RB051L-40
D1001	8-719-938-75	s	DIODE SB05-05CP (RECTI)
D1002	8-719-938-75	s	DIODE SB05-05CP (RECTI)
D1003	8-719-066-98	s	DIODE RB051L-40
D1004	8-719-938-75	s	DIODE SB05-05CP (RECTI)
D1005	8-719-938-75	s	DIODE SB05-05CP (RECTI)
E200	1-535-877-22	s	CHIP,CHECKER (TEST POINT)
E300	1-535-877-22	s	CHIP,CHECKER (TEST POINT)
E500	1-535-877-22	s	CHIP,CHECKER (TEST POINT)
E700	1-535-877-22	s	CHIP,CHECKER (TEST POINT)
E900	1-535-877-22	s	CHIP,CHECKER (TEST POINT)
F1000	⚠ 1-576-270-11	s	FUSE CHIP 4A/125V (6125)
F1001	⚠ 1-576-329-11	s	FUSE CHIP 10A/125V (6125)
FB700	1-414-864-11	s	INDUCTOR, MICRO (CHIP TYPE)
FB702	1-414-864-11	s	INDUCTOR, MICRO (CHIP TYPE)
FB800	1-414-864-11	s	INDUCTOR, MICRO (CHIP TYPE)
FB801	1-414-864-11	s	INDUCTOR, MICRO (CHIP TYPE)
FB802	1-414-864-11	s	INDUCTOR, MICRO (CHIP TYPE)
FB803	1-414-864-11	s	INDUCTOR, MICRO (CHIP TYPE)
FB804	1-414-864-11	s	INDUCTOR, MICRO (CHIP TYPE)
FB805	1-414-864-11	s	INDUCTOR, MICRO (CHIP TYPE)
FB806	1-414-864-11	s	INDUCTOR, MICRO (CHIP TYPE)
FB807	1-414-864-11	s	INDUCTOR, MICRO (CHIP TYPE)
FB808	1-414-864-11	s	INDUCTOR, MICRO (CHIP TYPE)
FB809	1-414-864-11	s	INDUCTOR, MICRO (CHIP TYPE)
FB810	1-414-864-11	s	INDUCTOR, MICRO (CHIP TYPE)
IC110	6-700-804-01	s	IC SN74LVC574APWR
IC111	6-700-804-01	s	IC SN74LVC574APWR
IC112	6-700-804-01	s	IC SN74LVC574APWR
IC201	8-759-549-01	s	IC SN74LV125APWR
IC202	8-759-679-55	s	IC SN74LVC08APWR
IC203	8-759-662-39	s	IC 74VHCT245AMTCX
IC204	6-702-148-01	s	IC XC61CN2702NR
IC205	8-759-539-53	s	IC MB90096PF-G-139-BND(ER)
IC206	6-704-718-01	s	IC XC18V02VQG44C
IC208	6-706-484-01	s	IC TC7SH04FU(T5RSOYJF)

(HIF-1B BOARD [SUFFIX 24-] for BKMW-104)

Ref. No. or Q'ty	Part No.	SP	Description
IC209	8-759-669-44	s	IC SN74LVC74APWR-12
IC301	8-759-549-15	s	IC SN74LV245APWR
IC302	6-705-983-01	s	IC IS42S32200B-6TL-TR
IC303	6-705-983-01	s	IC IS42S32200B-6TL-TR
IC304	6-705-983-01	s	IC IS42S32200B-6TL-TR
IC305	6-705-983-01	s	IC IS42S32200B-6TL-TR
IC504	6-705-983-01	s	IC IS42S32200B-6TL-TR
IC505	6-705-983-01	s	IC IS42S32200B-6TL-TR
IC701	8-759-392-77	s	IC SN74LVC245APW (E20)
IC703	8-759-598-13	s	IC CDC2510CPWR
IC704	8-759-694-36	s	IC SN74CBTLV3257PWR
IC705	8-759-639-85	s	IC SN65LVDS31DR
IC706	8-759-592-47	s	IC TC7SZ08FU(TE85R)
IC708	8-759-392-77	s	IC SN74LVC245APW (E20)
IC709	6-706-487-01	s	IC TC7SH08FU(T5RSOYJF)
IC713	8-759-598-13	s	IC CDC2510CPWR
IC724	8-759-698-08	s	IC SN74CBTLV1G125DCKR
IC725	8-759-698-08	s	IC SN74CBTLV1G125DCKR
IC726	6-706-484-01	s	IC TC7SH04FU(T5RSOYJF)
IC730	8-759-675-47	s	IC SN74LVC04APWR
IC733	6-703-875-01	s	IC CDCVF2505PWR
IC800	8-759-573-91	s	IC AD8055ARTZ-REEL7
IC801	6-704-406-01	s	IC LM1881MX/NOPB
IC802	8-759-573-91	s	IC AD8055ARTZ-REEL7
IC803	6-701-453-01	s	IC SN75207BNSR
IC804	6-706-487-01	s	IC TC7SH08FU(T5RSOYJF)
IC805	8-759-472-35	s	IC 74VHC221AMTCX
IC806	8-759-472-04	s	IC 74VHC74MTCX
IC807	8-759-472-35	s	IC 74VHC221AMTCX
IC808	8-759-678-15	s	IC TLV2231CDBVR
IC809	6-706-478-01	s	IC TC7SET08FU(T5RSOJF)
IC810	8-759-678-15	s	IC TLV2231CDBVR
IC811	8-759-678-15	s	IC TLV2231CDBVR
IC812	8-759-678-15	s	IC TLV2231CDBVR
IC813	8-759-564-49	s	IC TC7W53FU-TE12R
IC814	8-759-564-49	s	IC TC7W53FU-TE12R
IC815	8-759-592-47	s	IC TC7SZ08FU(TE85R)
IC816	8-759-592-49	s	IC TC7SZ125FU(TE85R)
IC817	8-759-592-49	s	IC TC7SZ125FU(TE85R)
IC818	8-759-592-47	s	IC TC7SZ08FU(TE85R)
IC819	8-759-592-47	s	IC TC7SZ08FU(TE85R)
IC820	8-759-592-49	s	IC TC7SZ125FU(TE85R)
IC821	8-759-592-47	s	IC TC7SZ08FU(TE85R)
IC822	8-759-524-08	s	IC TC74VHC139FT(EL)
IC823	8-759-592-49	s	IC TC7SZ125FU(TE85R)
IC824	8-759-592-47	s	IC TC7SZ08FU(TE85R)
IC825	8-759-592-47	s	IC TC7SZ08FU(TE85R)
IC826	8-759-592-47	s	IC TC7SZ08FU(TE85R)
IC827	8-759-183-53	s	IC TL431CPK-E2
IC828	8-759-669-78	s	IC TLC2933IPWR-12
IC829	8-759-669-78	s	IC TLC2933IPWR-12
IC830	8-759-472-35	s	IC 74VHC221AMTCX
IC831	8-759-559-82	s	IC UPC29M33T-E1
IC900	8-759-549-15	s	IC SN74LV245APWR
IC901	8-759-549-15	s	IC SN74LV245APWR
IC902	8-759-549-15	s	IC SN74LV245APWR
IC903	8-759-549-15	s	IC SN74LV245APWR
IC904	8-759-392-77	s	IC SN74LVC245APW (E20)
IC905	8-759-549-15	s	IC SN74LV245APWR

(HIF-1B BOARD [SUFFIX 24-] for BKMW-104)

Ref. No. or Q'ty	Part No.	SP	Description
IC906	8-759-549-15	s	IC SN74LV245APWR
IC907	8-759-549-15	s	IC SN74LV245APWR
IC908	8-759-549-15	s	IC SN74LV245APWR
IC910	8-759-549-15	s	IC SN74LV245APWR
IC912	8-759-549-15	s	IC SN74LV245APWR
IC913	8-759-662-38	s	IC 74VHCT08AMTCX
IC914	8-759-471-96	s	IC 74VHC08MTCX
IC915	8-759-592-49	s	IC TC7SZ125FU(TE85R)
IC916	8-759-549-15	s	IC SN74LV245APWR
IC918	8-759-392-77	s	IC SN74LVC245APW (E20)
IC919	6-706-484-01	s	IC TC7SH04FU(T5RSOYJF)
IC920	8-759-549-15	s	IC SN74LV245APWR
IC980	6-704-718-01	s	IC XC18V02VQG44C
IC1000	8-759-642-22	s	IC UPC29M05T-E2
IC1001	8-759-539-89	s	IC LM2990SX-5.0
IC1002	8-759-642-22	s	IC UPC29M05T-E2
IC1003	6-706-487-01	s	IC TC7SH08FU(T5RSOYJF)
IC1004	8-759-597-57	s	IC LTC1628CG#TR
IC1100	8-759-392-77	s	IC SN74LVC245APW (E20)
IC1101	8-759-392-77	s	IC SN74LVC245APW (E20)
IC1102	8-759-392-77	s	IC SN74LVC245APW (E20)
IC1103	8-759-549-15	s	IC SN74LV245APWR
IC1104	8-759-472-24	s	IC 74VHC157MTCX
IC1105	8-759-472-24	s	IC 74VHC157MTCX
IC1106	8-759-471-91	s	IC 74VHC04MTCX
L800	1-412-987-31	s	INDUCTOR (SMALL TYPE) 4.70UH
L1000	1-419-630-11	s	COIL, CHOKE 4.7UH
L1001	1-419-630-11	s	COIL, CHOKE 4.7UH
L1002	1-419-630-11	s	COIL, CHOKE 4.7UH
L1003	1-419-630-11	s	COIL, CHOKE 4.7UH
L1004	1-419-630-11	s	COIL, CHOKE 4.7UH
L1005	1-469-970-11	s	INDUCTOR, (SMD) 15UH
L1006	1-469-970-11	s	INDUCTOR, (SMD) 15UH
L1007	1-419-630-11	s	COIL, CHOKE 4.7UH
L1008	1-419-630-11	s	COIL, CHOKE 4.7UH
Q200	8-729-928-81	s	TRANSISTOR DTC144EE
Q201	8-729-928-54	s	TRANSISTOR DTA123JE
Q202	8-729-928-19	s	TRANSISTOR 2SA1774R
Q203	8-729-047-32	s	TRANSISTOR SI4425DY-T1
Q701	8-729-928-81	s	TRANSISTOR DTC144EE
Q704	8-729-928-19	s	TRANSISTOR 2SA1774R
Q800	8-729-928-19	s	TRANSISTOR 2SA1774R
Q801	8-729-927-99	s	TRANSISTOR 2SC4617R
Q802	8-729-143-07	s	TRANSISTOR 2SA1610-Y33
Q1000	8-729-047-85	s	TRANSISTOR SI4416DY-T1
Q1001	8-729-047-85	s	TRANSISTOR SI4416DY-T1
Q1002	8-729-047-85	s	TRANSISTOR SI4416DY-T1
Q1003	8-729-047-85	s	TRANSISTOR SI4416DY-T1
R207	1-211-985-11	s	RESISTOR,CHIP 47 1/10W (1608)
R208	1-211-985-11	s	RESISTOR,CHIP 47 1/10W (1608)
R209	1-211-985-11	s	RESISTOR,CHIP 47 1/10W (1608)
R210	1-211-985-11	s	RESISTOR,CHIP 47 1/10W (1608)
R211	1-211-985-11	s	RESISTOR,CHIP 47 1/10W (1608)
R212	1-211-985-11	s	RESISTOR,CHIP 47 1/10W (1608)
R213	1-211-985-11	s	RESISTOR,CHIP 47 1/10W (1608)
R214	1-211-985-11	s	RESISTOR,CHIP 47 1/10W (1608)
R215	1-211-985-11	s	RESISTOR,CHIP 47 1/10W (1608)
R216	1-211-985-11	s	RESISTOR,CHIP 47 1/10W (1608)

(HIF-1B BOARD [SUFFIX 24-] for BKMW-104)

Ref. No. or Q'ty	Part No.	SP	Description
R217	1-211-985-11	s	RESISTOR,CHIP 47 1/10W (1608)
R218	1-211-985-11	s	RESISTOR,CHIP 47 1/10W (1608)
R219	1-211-985-11	s	RESISTOR,CHIP 47 1/10W (1608)
R220	1-211-985-11	s	RESISTOR,CHIP 47 1/10W (1608)
R221	1-211-985-11	s	RESISTOR,CHIP 47 1/10W (1608)
R222	1-211-985-11	s	RESISTOR,CHIP 47 1/10W (1608)
R235	1-211-985-11	s	RESISTOR,CHIP 47 1/10W (1608)
R236	1-211-985-11	s	RESISTOR,CHIP 47 1/10W (1608)
R237	1-211-985-11	s	RESISTOR,CHIP 47 1/10W (1608)
R238	1-211-985-11	s	RESISTOR,CHIP 47 1/10W (1608)
R239	1-211-985-11	s	RESISTOR,CHIP 47 1/10W (1608)
R240	1-211-985-11	s	RESISTOR,CHIP 47 1/10W (1608)
R241	1-211-985-11	s	RESISTOR,CHIP 47 1/10W (1608)
R242	1-211-985-11	s	RESISTOR,CHIP 47 1/10W (1608)
R243	1-211-985-11	s	RESISTOR,CHIP 47 1/10W (1608)
R244	1-211-985-11	s	RESISTOR,CHIP 47 1/10W (1608)
R245	1-211-985-11	s	RESISTOR,CHIP 47 1/10W (1608)
R246	1-211-985-11	s	RESISTOR,CHIP 47 1/10W (1608)
R247	1-211-985-11	s	RESISTOR,CHIP 47 1/10W (1608)
R248	1-211-985-11	s	RESISTOR,CHIP 47 1/10W (1608)
R249	1-211-985-11	s	RESISTOR,CHIP 47 1/10W (1608)
R250	1-211-985-11	s	RESISTOR,CHIP 47 1/10W (1608)
R252	1-218-871-11	s	RESISTOR,CHIP 10K 1/10W (1608)
R253	1-211-985-11	s	RESISTOR,CHIP 47 1/10W (1608)
R254	1-218-835-11	s	RESISTOR,CHIP 330 1/10W (1608)
R255	1-218-847-11	s	RESISTOR, CHIP 1K 1/10W (1608)
R256	1-218-847-11	s	RESISTOR, CHIP 1K 1/10W (1608)
R258	1-211-985-11	s	RESISTOR,CHIP 47 1/10W (1608)
R259	1-211-985-11	s	RESISTOR,CHIP 47 1/10W (1608)
R260	1-211-985-11	s	RESISTOR,CHIP 47 1/10W (1608)
R261	1-211-985-11	s	RESISTOR,CHIP 47 1/10W (1608)
R262	1-211-985-11	s	RESISTOR,CHIP 47 1/10W (1608)
R263	1-218-847-11	s	RESISTOR, CHIP 1K 1/10W (1608)
R264	1-218-847-11	s	RESISTOR, CHIP 1K 1/10W (1608)
R265	1-218-835-11	s	RESISTOR,CHIP 330 1/10W (1608)
R266	1-218-835-11	s	RESISTOR,CHIP 330 1/10W (1608)
R267	1-218-835-11	s	RESISTOR,CHIP 330 1/10W (1608)
R268	1-218-863-11	s	RESISTOR,CHIP 4.7K 1/10W(1608)
R269	1-211-985-11	s	RESISTOR,CHIP 47 1/10W (1608)
R273	1-216-864-11	s	CONDUCTOR, CHIP (1608)
R300	1-218-883-11	s	RESISTOR,CHIP 33K 1/10W (1608)
R301	1-218-847-11	s	RESISTOR, CHIP 1K 1/10W (1608)
R302	1-211-985-11	s	RESISTOR,CHIP 47 1/10W (1608)
R303	1-211-985-11	s	RESISTOR,CHIP 47 1/10W (1608)
R310	1-216-864-11	s	CONDUCTOR, CHIP (1608)
R313	1-216-864-11	s	CONDUCTOR, CHIP (1608)
R500	1-216-864-11	s	CONDUCTOR, CHIP (1608)
R503	1-216-864-11	s	CONDUCTOR, CHIP (1608)
R504	1-216-864-11	s	CONDUCTOR, CHIP (1608)
R629	1-216-864-11	s	CONDUCTOR, CHIP (1608)
R704	1-218-831-11	s	RESISTOR, CHIP 220 1/10W(1608)
R705	1-218-831-11	s	RESISTOR, CHIP 220 1/10W(1608)
R706	1-218-851-11	s	RESISTOR,CHIP 1.5K 1/10W(1608)
R707	1-218-847-11	s	RESISTOR, CHIP 1K 1/10W (1608)
R708	1-218-863-11	s	RESISTOR,CHIP 4.7K 1/10W(1608)
R711	1-211-985-11	s	RESISTOR,CHIP 47 1/10W (1608)
R712	1-211-985-11	s	RESISTOR,CHIP 47 1/10W (1608)
R713	1-211-985-11	s	RESISTOR,CHIP 47 1/10W (1608)
R714	1-211-985-11	s	RESISTOR,CHIP 47 1/10W (1608)

(HIF-1B BOARD [SUFFIX 24-] for BKMW-104)

Ref. No. or Q'ty	Part No.	SP	Description
R716	1-216-864-11	s	CONDUCTOR, CHIP (1608)
R717	1-216-864-11	s	CONDUCTOR, CHIP (1608)
R718	1-216-864-11	s	CONDUCTOR, CHIP (1608)
R719	1-218-863-11	s	RESISTOR,CHIP 4.7K 1/10W(1608)
R720	1-216-864-11	s	CONDUCTOR, CHIP (1608)
R721	1-216-864-11	s	CONDUCTOR, CHIP (1608)
R722	1-216-864-11	s	CONDUCTOR, CHIP (1608)
R723	1-216-864-11	s	CONDUCTOR, CHIP (1608)
R724	1-216-864-11	s	CONDUCTOR, CHIP (1608)
R725	1-216-864-11	s	CONDUCTOR, CHIP (1608)
R726	1-216-864-11	s	CONDUCTOR, CHIP (1608)
R727	1-216-864-11	s	CONDUCTOR, CHIP (1608)
R728	1-216-864-11	s	CONDUCTOR, CHIP (1608)
R729	1-218-857-11	s	RESISTOR,CHIP 2.7K 1/10W(1608)
R733	1-211-985-11	s	RESISTOR,CHIP 47 1/10W (1608)
R734	1-211-985-11	s	RESISTOR,CHIP 47 1/10W (1608)
R735	1-211-985-11	s	RESISTOR,CHIP 47 1/10W (1608)
R736	1-211-985-11	s	RESISTOR,CHIP 47 1/10W (1608)
R737	1-211-985-11	s	RESISTOR,CHIP 47 1/10W (1608)
R738	1-211-985-11	s	RESISTOR,CHIP 47 1/10W (1608)
R739	1-211-985-11	s	RESISTOR,CHIP 47 1/10W (1608)
R740	1-211-985-11	s	RESISTOR,CHIP 47 1/10W (1608)
R743	1-211-985-11	s	RESISTOR,CHIP 47 1/10W (1608)
R744	1-211-985-11	s	RESISTOR,CHIP 47 1/10W (1608)
R745	1-211-985-11	s	RESISTOR,CHIP 47 1/10W (1608)
R746	1-211-985-11	s	RESISTOR,CHIP 47 1/10W (1608)
R750	1-211-985-11	s	RESISTOR,CHIP 47 1/10W (1608)
R753	1-211-985-11	s	RESISTOR,CHIP 47 1/10W (1608)
R754	1-211-985-11	s	RESISTOR,CHIP 47 1/10W (1608)
R755	1-211-985-11	s	RESISTOR,CHIP 47 1/10W (1608)
R756	1-218-847-11	s	RESISTOR, CHIP 1K 1/10W (1608)
R757	1-218-847-11	s	RESISTOR, CHIP 1K 1/10W (1608)
R758	1-218-847-11	s	RESISTOR, CHIP 1K 1/10W (1608)
R759	1-211-977-11	s	RESISTOR,CHIP 22 1/10W (1608)
R760	1-211-977-11	s	RESISTOR,CHIP 22 1/10W (1608)
R761	1-211-977-11	s	RESISTOR,CHIP 22 1/10W (1608)
R762	1-211-977-11	s	RESISTOR,CHIP 22 1/10W (1608)
R763	1-211-977-11	s	RESISTOR,CHIP 22 1/10W (1608)
R764	1-211-977-11	s	RESISTOR,CHIP 22 1/10W (1608)
R765	1-211-977-11	s	RESISTOR,CHIP 22 1/10W (1608)
R766	1-211-977-11	s	RESISTOR,CHIP 22 1/10W (1608)
R767	1-211-977-11	s	RESISTOR,CHIP 22 1/10W (1608)
R768	1-211-977-11	s	RESISTOR,CHIP 22 1/10W (1608)
R770	1-218-895-11	s	RESISTOR,CHIP 100K 1/10W(1608)
R771	1-218-847-11	s	RESISTOR, CHIP 1K 1/10W (1608)
R772	1-218-871-11	s	RESISTOR,CHIP 10K 1/10W (1608)
R773	1-211-985-11	s	RESISTOR,CHIP 47 1/10W (1608)
R774	1-211-985-11	s	RESISTOR,CHIP 47 1/10W (1608)
R781	1-218-863-11	s	RESISTOR,CHIP 4.7K 1/10W(1608)
R783	1-216-864-11	s	CONDUCTOR, CHIP (1608)
R784	1-211-985-11	s	RESISTOR,CHIP 47 1/10W (1608)
R788	1-218-847-11	s	RESISTOR, CHIP 1K 1/10W (1608)
R789	1-218-847-11	s	RESISTOR, CHIP 1K 1/10W (1608)
R790	1-218-831-11	s	RESISTOR, CHIP 220 1/10W(1608)
R791	1-211-985-11	s	RESISTOR,CHIP 47 1/10W (1608)
R793	1-211-977-11	s	RESISTOR,CHIP 22 1/10W (1608)
R796	1-218-863-11	s	RESISTOR,CHIP 4.7K 1/10W(1608)
R800	1-218-847-11	s	RESISTOR, CHIP 1K 1/10W (1608)
R801	1-218-847-11	s	RESISTOR, CHIP 1K 1/10W (1608)

(HIF-1B BOARD [SUFFIX 24-] for BKMW-104)

Ref. No. or Q'ty	Part No.	SP	Description
R802	1-216-864-11	s	CONDUCTOR, CHIP (1608)
R803	1-216-864-11	s	CONDUCTOR, CHIP (1608)
R804	1-216-864-11	s	CONDUCTOR, CHIP (1608)
R805	1-218-847-11	s	RESISTOR, CHIP 1K 1/10W (1608)
R806	1-218-847-11	s	RESISTOR, CHIP 1K 1/10W (1608)
R807	1-218-847-11	s	RESISTOR, CHIP 1K 1/10W (1608)
R808	1-218-847-11	s	RESISTOR, CHIP 1K 1/10W (1608)
R809	1-218-847-11	s	RESISTOR, CHIP 1K 1/10W (1608)
R810	1-218-847-11	s	RESISTOR, CHIP 1K 1/10W (1608)
R811	1-211-985-11	s	RESISTOR,CHIP 47 1/10W (1608)
R812	1-218-847-11	s	RESISTOR, CHIP 1K 1/10W (1608)
R813	1-211-977-11	s	RESISTOR,CHIP 22 1/10W (1608)
R814	1-218-839-11	s	RESISTOR,CHIP 470 1/10W (1608)
R815	1-218-839-11	s	RESISTOR,CHIP 470 1/10W (1608)
R816	1-218-847-11	s	RESISTOR, CHIP 1K 1/10W (1608)
R817	1-218-832-11	s	RESISTOR,CHIP 240 1/10W (1608)
R818	1-218-856-11	s	RESISTOR,CHIP 2.4K 1/10W(1608)
R819	1-218-847-11	s	RESISTOR, CHIP 1K 1/10W (1608)
R820	1-218-827-11	s	RESISTOR,CHIP 150 1/10W (1608)
R821	1-218-827-11	s	RESISTOR,CHIP 150 1/10W (1608)
R824	1-218-879-11	s	RESISTOR,CHIP 22K 1/10W (1608)
R825	1-218-855-11	s	RESISTOR,CHIP 2.2K 1/10W(1608)
R826	1-218-865-11	s	RESISTOR,CHIP 5.6K 1/10W(1608)
R827	1-218-871-11	s	RESISTOR,CHIP 10K 1/10W (1608)
R828	1-216-863-11	s	RESISTOR,CHIP 3.3M 1/16W 1608
R829	1-218-827-11	s	RESISTOR,CHIP 150 1/10W (1608)
R830	1-218-827-11	s	RESISTOR,CHIP 150 1/10W (1608)
R831	1-218-855-11	s	RESISTOR,CHIP 2.2K 1/10W(1608)
R832	1-218-847-11	s	RESISTOR, CHIP 1K 1/10W (1608)
R833	1-218-847-11	s	RESISTOR, CHIP 1K 1/10W (1608)
R834	1-218-823-11	s	RESISTOR,CHIP 100 1/10W (1608)
R835	1-218-859-11	s	RESISTOR,CHIP 3.3K 1/10W(1608)
R836	1-218-823-11	s	RESISTOR,CHIP 100 1/10W (1608)
R837	1-218-855-11	s	RESISTOR,CHIP 2.2K 1/10W(1608)
R838	1-218-823-11	s	RESISTOR,CHIP 100 1/10W (1608)
R839	1-218-863-11	s	RESISTOR,CHIP 4.7K 1/10W(1608)
R840	1-218-858-11	s	RESISTOR, CHIP 3K 1/10W (1608)
R841	1-218-847-11	s	RESISTOR, CHIP 1K 1/10W (1608)
R842	1-218-847-11	s	RESISTOR, CHIP 1K 1/10W (1608)
R843	1-218-847-11	s	RESISTOR, CHIP 1K 1/10W (1608)
R844	1-218-847-11	s	RESISTOR, CHIP 1K 1/10W (1608)
R845	1-216-864-11	s	CONDUCTOR, CHIP (1608)
R847	1-218-895-11	s	RESISTOR,CHIP 100K 1/10W(1608)
R848	1-218-895-11	s	RESISTOR,CHIP 100K 1/10W(1608)
R849	1-218-895-11	s	RESISTOR,CHIP 100K 1/10W(1608)
R850	1-218-871-11	s	RESISTOR,CHIP 10K 1/10W (1608)
R851	1-218-871-11	s	RESISTOR,CHIP 10K 1/10W (1608)
R852	1-218-871-11	s	RESISTOR,CHIP 10K 1/10W (1608)
R853	1-218-903-11	s	RESISTOR,CHIP 220K 1/10W(1608)
R854	1-218-871-11	s	RESISTOR,CHIP 10K 1/10W (1608)
R855	1-218-871-11	s	RESISTOR,CHIP 10K 1/10W (1608)
R857	1-218-871-11	s	RESISTOR,CHIP 10K 1/10W (1608)
R858	1-218-871-11	s	RESISTOR,CHIP 10K 1/10W (1608)
R859	1-218-831-11	s	RESISTOR, CHIP 220 1/10W(1608)
R860	1-218-839-11	s	RESISTOR,CHIP 470 1/10W (1608)
R861	1-218-839-11	s	RESISTOR,CHIP 470 1/10W (1608)
R862	1-211-985-11	s	RESISTOR,CHIP 47 1/10W (1608)
R863	1-211-985-11	s	RESISTOR,CHIP 47 1/10W (1608)
R864	1-211-985-11	s	RESISTOR,CHIP 47 1/10W (1608)

(HIF-1B BOARD [SUFFIX 24-] for BKMW-104)

Ref. No. or Q'ty	Part No.	SP	Description
R865	1-211-985-11	s	RESISTOR,CHIP 47 1/10W (1608)
R866	1-211-985-11	s	RESISTOR,CHIP 47 1/10W (1608)
R867	1-211-985-11	s	RESISTOR,CHIP 47 1/10W (1608)
R868	1-211-985-11	s	RESISTOR,CHIP 47 1/10W (1608)
R869	1-211-985-11	s	RESISTOR,CHIP 47 1/10W (1608)
R900	1-218-847-11	s	RESISTOR, CHIP 1K 1/10W (1608)
R901	1-218-823-11	s	RESISTOR,CHIP 100 1/10W (1608)
R902	1-218-847-11	s	RESISTOR, CHIP 1K 1/10W (1608)
R903	1-218-847-11	s	RESISTOR, CHIP 1K 1/10W (1608)
R904	1-211-969-11	s	RESISTOR,CHIP 10 1/10W (1608)
R905	1-211-969-11	s	RESISTOR,CHIP 10 1/10W (1608)
R908	1-218-863-11	s	RESISTOR,CHIP 4.7K 1/10W(1608)
R909	1-218-863-11	s	RESISTOR,CHIP 4.7K 1/10W(1608)
R910	1-218-895-11	s	RESISTOR,CHIP 100K 1/10W(1608)
R911	1-218-895-11	s	RESISTOR,CHIP 100K 1/10W(1608)
R912	1-218-895-11	s	RESISTOR,CHIP 100K 1/10W(1608)
R913	1-211-985-11	s	RESISTOR,CHIP 47 1/10W (1608)
R915	1-218-895-11	s	RESISTOR,CHIP 100K 1/10W(1608)
R916	1-218-895-11	s	RESISTOR,CHIP 100K 1/10W(1608)
R917	1-211-985-11	s	RESISTOR,CHIP 47 1/10W (1608)
R918	1-211-985-11	s	RESISTOR,CHIP 47 1/10W (1608)
R924	1-216-864-11	s	CONDUCTOR, CHIP (1608)
R925	1-216-864-11	s	CONDUCTOR, CHIP (1608)
R926	1-216-864-11	s	CONDUCTOR, CHIP (1608)
R927	1-218-895-11	s	RESISTOR,CHIP 100K 1/10W(1608)
R928	1-211-985-11	s	RESISTOR,CHIP 47 1/10W (1608)
R929	1-211-985-11	s	RESISTOR,CHIP 47 1/10W (1608)
R936	1-211-969-11	s	RESISTOR,CHIP 10 1/10W (1608)
R940	1-211-985-11	s	RESISTOR,CHIP 47 1/10W (1608)
R941	1-211-985-11	s	RESISTOR,CHIP 47 1/10W (1608)
R942	1-211-985-11	s	RESISTOR,CHIP 47 1/10W (1608)
R943	1-211-985-11	s	RESISTOR,CHIP 47 1/10W (1608)
R944	1-218-895-11	s	RESISTOR,CHIP 100K 1/10W(1608)
R945	1-211-985-11	s	RESISTOR,CHIP 47 1/10W (1608)
R946	1-211-969-11	s	RESISTOR,CHIP 10 1/10W (1608)
R947	1-211-969-11	s	RESISTOR,CHIP 10 1/10W (1608)
R948	1-211-969-11	s	RESISTOR,CHIP 10 1/10W (1608)
R949	1-211-985-11	s	RESISTOR,CHIP 47 1/10W (1608)
R950	1-211-985-11	s	RESISTOR,CHIP 47 1/10W (1608)
R951	1-211-985-11	s	RESISTOR,CHIP 47 1/10W (1608)
R952	1-211-985-11	s	RESISTOR,CHIP 47 1/10W (1608)
R953	1-218-823-11	s	RESISTOR,CHIP 100 1/10W (1608)
R954	1-218-823-11	s	RESISTOR,CHIP 100 1/10W (1608)
R955	1-211-985-11	s	RESISTOR,CHIP 47 1/10W (1608)
R956	1-211-985-11	s	RESISTOR,CHIP 47 1/10W (1608)
R957	1-211-985-11	s	RESISTOR,CHIP 47 1/10W (1608)
R962	1-211-985-11	s	RESISTOR,CHIP 47 1/10W (1608)
R963	1-211-985-11	s	RESISTOR,CHIP 47 1/10W (1608)
R964	1-211-969-11	s	RESISTOR,CHIP 10 1/10W (1608)
R965	1-211-985-11	s	RESISTOR,CHIP 47 1/10W (1608)
R981	1-218-835-11	s	RESISTOR,CHIP 330 1/10W (1608)
R982	1-218-863-11	s	RESISTOR,CHIP 4.7K 1/10W(1608)
R990	1-218-847-11	s	RESISTOR, CHIP 1K 1/10W (1608)
R1000	1-219-610-11	s	RESISTOR, (SQUARE TYPE) 0.022
R1001	1-218-847-11	s	RESISTOR, CHIP 1K 1/10W (1608)
R1003	1-211-969-11	s	RESISTOR,CHIP 10 1/10W (1608)
R1004	1-211-969-11	s	RESISTOR,CHIP 10 1/10W (1608)
R1005	1-218-880-11	s	RESISTOR,CHIP 24K 1/10W (1608)
R1006	1-218-877-11	s	RESISTOR,CHIP 18K 1/10W (1608)

(HIF-1B BOARD [SUFFIX 24-] for BKMW-104)

Ref. No. or Q'ty	Part No.	SP	Description
R1007	1-211-985-11	s	RESISTOR,CHIP 47 1/10W (1608)
R1008	1-211-985-11	s	RESISTOR,CHIP 47 1/10W (1608)
R1009	1-218-863-11	s	RESISTOR,CHIP 4.7K 1/10W(1608)
R1016	1-218-823-11	s	RESISTOR,CHIP 100 1/10W (1608)
R1021	1-218-863-11	s	RESISTOR,CHIP 4.7K 1/10W(1608)
R1022	1-218-871-11	s	RESISTOR,CHIP 10K 1/10W (1608)
R1023	1-218-871-11	s	RESISTOR,CHIP 10K 1/10W (1608)
R1026	1-211-969-11	s	RESISTOR,CHIP 10 1/10W (1608)
R1027	1-211-969-11	s	RESISTOR,CHIP 10 1/10W (1608)
R1028	1-219-610-11	s	RESISTOR, (SQUARE TYPE) 0.022
R1709	1-211-977-11	s	RESISTOR,CHIP 22 1/10W (1608)
R1710	1-211-977-11	s	RESISTOR,CHIP 22 1/10W (1608)
R1711	1-211-977-11	s	RESISTOR,CHIP 22 1/10W (1608)
R1716	1-211-977-11	s	RESISTOR,CHIP 22 1/10W (1608)
R1717	1-211-977-11	s	RESISTOR,CHIP 22 1/10W (1608)
R1718	1-211-985-11	s	RESISTOR,CHIP 47 1/10W (1608)
R1719	1-211-985-11	s	RESISTOR,CHIP 47 1/10W (1608)
R1720	1-211-985-11	s	RESISTOR,CHIP 47 1/10W (1608)
R1738	1-218-831-11	s	RESISTOR, CHIP 220 1/10W(1608)
R1740	1-216-864-11	s	CONDUCTOR, CHIP (1608)
RB119	1-233-411-11	s	RESISTOR,CHIP NETWORK 220/3216
RB120	1-233-411-11	s	RESISTOR,CHIP NETWORK 220/3216
RB121	1-233-411-11	s	RESISTOR,CHIP NETWORK 220/3216
RB122	1-233-411-11	s	RESISTOR,CHIP NETWORK 220/3216
RB123	1-233-411-11	s	RESISTOR,CHIP NETWORK 220/3216
RB124	1-233-411-11	s	RESISTOR,CHIP NETWORK 220/3216
RB125	1-239-409-11	s	RESISTOR NETWORK 47 (1608)
RB126	1-239-409-11	s	RESISTOR NETWORK 47 (1608)
RB127	1-239-409-11	s	RESISTOR NETWORK 47 (1608)
RB128	1-239-409-11	s	RESISTOR NETWORK 47 (1608)
RB129	1-239-409-11	s	RESISTOR NETWORK 47 (1608)
RB130	1-239-409-11	s	RESISTOR NETWORK 47 (1608)
RB204	1-239-409-11	s	RESISTOR NETWORK 47 (1608)
RB205	1-239-409-11	s	RESISTOR NETWORK 47 (1608)
RB206	1-239-409-11	s	RESISTOR NETWORK 47 (1608)
RB207	1-239-409-11	s	RESISTOR NETWORK 47 (1608)
RB208	1-239-409-11	s	RESISTOR NETWORK 47 (1608)
RB209	1-239-409-11	s	RESISTOR NETWORK 47 (1608)
RB210	1-239-409-11	s	RESISTOR NETWORK 47 (1608)
RB211	1-239-409-11	s	RESISTOR NETWORK 47 (1608)
RB220	1-239-409-11	s	RESISTOR NETWORK 47 (1608)
RB221	1-239-409-11	s	RESISTOR NETWORK 47 (1608)
RB222	1-239-409-11	s	RESISTOR NETWORK 47 (1608)
RB223	1-239-409-11	s	RESISTOR NETWORK 47 (1608)
RB224	1-236-908-11	s	RESISTOR,NETWORK 10K (3216)
RB300	1-239-409-11	s	RESISTOR NETWORK 47 (1608)
RB301	1-239-409-11	s	RESISTOR NETWORK 47 (1608)
RB302	1-239-409-11	s	RESISTOR NETWORK 47 (1608)
RB303	1-239-409-11	s	RESISTOR NETWORK 47 (1608)
RB304	1-239-409-11	s	RESISTOR NETWORK 47 (1608)
RB309	1-239-409-11	s	RESISTOR NETWORK 47 (1608)
RB505	1-233-575-11	s	RES, CHIP NETWORK 22
RB506	1-233-575-11	s	RES, CHIP NETWORK 22
RB507	1-233-575-11	s	RES, CHIP NETWORK 22
RB508	1-233-575-11	s	RES, CHIP NETWORK 22
RB509	1-233-575-11	s	RES, CHIP NETWORK 22
RB510	1-233-575-11	s	RES, CHIP NETWORK 22
RB511	1-233-575-11	s	RES, CHIP NETWORK 22
RB512	1-233-575-11	s	RES, CHIP NETWORK 22

(HIF-1B BOARD [SUFFIX 24-] for BKMW-104)

Ref. No. or Q'ty	Part No.	SP	Description	
RB513	1-233-575-11	s	RES, CHIP NETWORK 22	
RB514	1-233-575-11	s	RES, CHIP NETWORK 22	
RB515	1-233-575-11	s	RES, CHIP NETWORK 22	
RB516	1-233-575-11	s	RES, CHIP NETWORK 22	
RB700	1-233-810-21	s	RES, NETWORK 100K	(3216)
RB704	1-233-575-11	s	RES, CHIP NETWORK 22	
RB900	1-233-810-21	s	RES, NETWORK 100K	(3216)
RB901	1-233-810-21	s	RES, NETWORK 100K	(3216)
RB902	1-233-810-21	s	RES, NETWORK 100K	(3216)
RB903	1-233-810-21	s	RES, NETWORK 100K	(3216)
RB904	1-233-810-21	s	RES, NETWORK 100K	(3216)
RB905	1-233-810-21	s	RES, NETWORK 100K	(3216)
RB906	1-233-810-21	s	RES, NETWORK 100K	(3216)
RB907	1-233-412-11	s	RESISTOR,CHIP NETWORK 1K	
RB908	1-239-409-11	s	RESISTOR NETWORK 47 (1608)	
RB909	1-239-409-11	s	RESISTOR NETWORK 47 (1608)	
RB910	1-239-409-11	s	RESISTOR NETWORK 47 (1608)	
RB911	1-239-409-11	s	RESISTOR NETWORK 47 (1608)	
RB912	1-239-409-11	s	RESISTOR NETWORK 47 (1608)	
RB913	1-239-409-11	s	RESISTOR NETWORK 47 (1608)	
RB914	1-239-409-11	s	RESISTOR NETWORK 47 (1608)	
RB915	1-233-412-11	s	RESISTOR,CHIP NETWORK 1K	
RB916	1-233-412-11	s	RESISTOR,CHIP NETWORK 1K	
RB917	1-239-409-11	s	RESISTOR NETWORK 47 (1608)	
RB918	1-233-414-11	s	RESISTOR,CHIP NETWORK 4.7K	
RB919	1-233-414-11	s	RESISTOR,CHIP NETWORK 4.7K	
RB920	1-233-414-11	s	RESISTOR,CHIP NETWORK 4.7K	
RB921	1-233-414-11	s	RESISTOR,CHIP NETWORK 4.7K	
RB922	1-233-810-21	s	RES, NETWORK 100K	(3216)
RB923	1-233-810-21	s	RES, NETWORK 100K	(3216)
RB924	1-233-810-21	s	RES, NETWORK 100K	(3216)
RB925	1-233-414-11	s	RESISTOR,CHIP NETWORK 4.7K	
RB926	1-233-414-11	s	RESISTOR,CHIP NETWORK 4.7K	
RB927	1-239-409-11	s	RESISTOR NETWORK 47 (1608)	
RB928	1-239-409-11	s	RESISTOR NETWORK 47 (1608)	
RB929	1-239-409-11	s	RESISTOR NETWORK 47 (1608)	
RB930	1-239-409-11	s	RESISTOR NETWORK 47 (1608)	
RB931	1-233-810-21	s	RES, NETWORK 100K	(3216)
RB932	1-239-409-11	s	RESISTOR NETWORK 47 (1608)	
RB933	1-239-409-11	s	RESISTOR NETWORK 47 (1608)	
RB934	1-239-409-11	s	RESISTOR NETWORK 47 (1608)	
RB935	1-239-409-11	s	RESISTOR NETWORK 47 (1608)	
RB936	1-239-409-11	s	RESISTOR NETWORK 47 (1608)	
RB937	1-239-409-11	s	RESISTOR NETWORK 47 (1608)	
RB938	1-239-409-11	s	RESISTOR NETWORK 47 (1608)	
RB939	1-239-409-11	s	RESISTOR NETWORK 47 (1608)	
RB940	1-239-409-11	s	RESISTOR NETWORK 47 (1608)	
RB941	1-233-412-11	s	RESISTOR,CHIP NETWORK 1K	
RB942	1-233-412-11	s	RESISTOR,CHIP NETWORK 1K	
RB943	1-233-412-11	s	RESISTOR,CHIP NETWORK 1K	
RB944	1-233-412-11	s	RESISTOR,CHIP NETWORK 1K	
RB945	1-233-412-11	s	RESISTOR,CHIP NETWORK 1K	
RB946	1-233-412-11	s	RESISTOR,CHIP NETWORK 1K	
RB947	1-239-409-11	s	RESISTOR NETWORK 47 (1608)	
RB948	1-239-409-11	s	RESISTOR NETWORK 47 (1608)	
RB949	1-239-409-11	s	RESISTOR NETWORK 47 (1608)	
RB950	1-233-412-11	s	RESISTOR,CHIP NETWORK 1K	
RB951	1-239-409-11	s	RESISTOR NETWORK 47 (1608)	
RB952	1-239-409-11	s	RESISTOR NETWORK 47 (1608)	

(HIF-1B BOARD [SUFFIX 24-] for BKMW-104)

Ref. No. or Q'ty	Part No.	SP	Description	
RB963	1-239-409-11	s	RESISTOR NETWORK 47 (1608)	
RB966	1-239-409-11	s	RESISTOR NETWORK 47 (1608)	
RB967	1-239-409-11	s	RESISTOR NETWORK 47 (1608)	
RB968	1-239-409-11	s	RESISTOR NETWORK 47 (1608)	
RB969	1-239-409-11	s	RESISTOR NETWORK 47 (1608)	
RB977	1-239-409-11	s	RESISTOR NETWORK 47 (1608)	
RB979	1-239-409-11	s	RESISTOR NETWORK 47 (1608)	
RB980	1-236-908-11	s	RESISTOR,NETWORK 10K	(3216)
RB1100	1-233-575-11	s	RES, CHIP NETWORK 22	
RB1101	1-233-575-11	s	RES, CHIP NETWORK 22	
RB1102	1-233-575-11	s	RES, CHIP NETWORK 22	
RB1103	1-233-575-11	s	RES, CHIP NETWORK 22	
RB1104	1-233-412-11	s	RESISTOR,CHIP NETWORK 1K	
RB1105	1-233-412-11	s	RESISTOR,CHIP NETWORK 1K	
RB1106	1-239-409-11	s	RESISTOR NETWORK 47 (1608)	
RB1107	1-239-409-11	s	RESISTOR NETWORK 47 (1608)	
RB1108	1-239-409-11	s	RESISTOR NETWORK 47 (1608)	
RB1109	1-239-409-11	s	RESISTOR NETWORK 47 (1608)	
RB1110	1-239-409-11	s	RESISTOR NETWORK 47 (1608)	
RB1111	1-233-575-11	s	RES, CHIP NETWORK 22	
RB1112	1-233-575-11	s	RES, CHIP NETWORK 22	
RB1113	1-233-575-11	s	RES, CHIP NETWORK 22	
RV800	1-241-261-41	s	RESISTOR, ADJ, CERMET 1K	
RV801	1-241-261-41	s	RESISTOR, ADJ, CERMET 1K	
S900	1-692-270-41	s	SWITCH, SLIDE	
TP200	1-535-877-22	s	CHIP,CHECKER (TEST POINT)	
TP201	1-535-877-22	s	CHIP,CHECKER (TEST POINT)	
TP700	1-535-877-22	s	CHIP,CHECKER (TEST POINT)	
TP701	1-535-877-22	s	CHIP,CHECKER (TEST POINT)	
TP702	1-535-877-22	s	CHIP,CHECKER (TEST POINT)	
TP704	1-535-877-22	s	CHIP,CHECKER (TEST POINT)	
TP705	1-535-877-22	s	CHIP,CHECKER (TEST POINT)	
TP800	1-535-877-22	s	CHIP,CHECKER (TEST POINT)	
X800	1-795-677-11	s	OSCILLATOR, CRYSTAL	
X801	1-795-676-11	s	OSCILLATOR, CRYSTAL	
X802	1-813-002-11	s	OSCILLATOR, CRYSTAL	
X803	1-813-001-11	s	OSCILLATOR, CRYSTAL	
X804	1-795-671-11	s	OSCILLATOR, CRYSTAL	
X805	1-795-670-11	s	OSCILLATOR, CRYSTAL	

HN-268 BOARD

Ref. No. or Q'ty	Part No.	SP	Description	
1pc	A-8324-941-A	o	MOUNTED CIRCUIT BOARD, HN-268	
CN216	1-506-476-11	s	PIN,CONNECTOR 11P	
CN230	1-564-002-11	s	PIN, CONNECTOR 3P	
CN231	1-564-001-11	o	PIN, CONNECTOR (2P)	
CN232	1-506-467-11	s	PIN,CONNECTOR 2P	
CN233	1-506-470-11	o	PIN,CONNECTOR 5P	

HP-101 BOARD

Ref. No. or Q'ty	Part No.	SP	Description
1pc	A-8324-898-A	o	MOUNTED CIRCUIT BOARD, HP-101
C1	1-162-923-11	s	CAPACITOR,CERAMIC 47PF/50V CH
C2	1-162-923-11	s	CAPACITOR,CERAMIC 47PF/50V CH
C3	1-162-923-11	s	CAPACITOR,CERAMIC 47PF/50V CH
C4	1-164-156-11	s	CAPACITOR,CERAMIC 0.1MF/25V F
C5	1-164-156-11	s	CAPACITOR,CERAMIC 0.1MF/25V F
C6	1-162-923-11	s	CAPACITOR,CERAMIC 47PF/50V CH
C7	1-164-156-11	s	CAPACITOR,CERAMIC 0.1MF/25V F
C8	1-164-156-11	s	CAPACITOR,CERAMIC 0.1MF/25V F
C9	1-115-155-11	s	CAPACITOR,ELECT 22MF/16V(BP)
C10	1-115-155-11	s	CAPACITOR,ELECT 22MF/16V(BP)
C11	1-164-156-11	s	CAPACITOR,CERAMIC 0.1MF/25V F
C12	1-164-156-11	s	CAPACITOR,CERAMIC 0.1MF/25V F
C13	1-164-156-11	s	CAPACITOR,CERAMIC 0.1MF/25V F
C14	1-164-156-11	s	CAPACITOR,CERAMIC 0.1MF/25V F
C15	1-162-923-11	s	CAPACITOR,CERAMIC 47PF/50V CH
C16	1-162-923-11	s	CAPACITOR,CERAMIC 47PF/50V CH
C17	1-109-892-11	s	CAPACITOR ERECT 47MF/25V(105C)
C18	1-126-390-11	s	CAPACITOR ELECT 22MF/6.3V(105)
C19	1-164-156-11	s	CAPACITOR,CERAMIC 0.1MF/25V F
C20	1-164-156-11	s	CAPACITOR,CERAMIC 0.1MF/25V F
C21	1-109-892-11	s	CAPACITOR ERECT 47MF/25V(105C)
C22	1-164-156-11	s	CAPACITOR,CERAMIC 0.1MF/25V F
C23	1-162-919-11	s	CAPACITOR,CERAMIC 22PF/50V CH
C24	1-162-919-11	s	CAPACITOR,CERAMIC 22PF/50V CH
C25	1-162-919-11	s	CAPACITOR,CERAMIC 22PF/50V CH
C26	1-162-919-11	s	CAPACITOR,CERAMIC 22PF/50V CH
C27	1-164-230-11	s	CAPACITOR,CERAMIC 220PF/50V
C28	1-164-230-11	s	CAPACITOR,CERAMIC 220PF/50V
CN1	1-565-327-11	s	JACK, LARGE TYPE (6.3MM)
CN2	1-766-383-11	s	PIN, CONNECTOR (12P)(SMD)1.5MM
CN3	1-794-225-11	o	CONNECTOR, BOARD TO BOARD 40P
CN4	1-766-376-11	s	PIN, CONNECTOR (1.5MM)(SMD) 9P
D1	8-719-017-01	s	DIODE 02DZ4.3-TPH3
D2	8-719-801-48	s	DIODE 1SS193
F1	⚠ 1-533-282-21	s	CIRCUIT PROTECTOR 2A (3225)
IC1	8-759-194-97	s	IC NJM4560M-D(TE2)
IC2	8-759-194-97	s	IC NJM4560M-D(TE2)
IC3	8-759-194-97	s	IC NJM4560M-D(TE2)
IC4	8-759-194-97	s	IC NJM4560M-D(TE2)
IC5	8-759-700-96	s	IC NJM5534M
IC6	8-759-700-96	s	IC NJM5534M
IC7	8-759-700-96	s	IC NJM5534M
IC8	8-759-700-96	s	IC NJM5534M
Q1	8-729-159-65	s	TRANSISTOR 2SD596-DV5
R1	1-218-708-11	s	RESISTOR,CHIP 4.7K 1/16W(1608)
R2	1-218-708-11	s	RESISTOR,CHIP 4.7K 1/16W(1608)
R3	1-218-708-11	s	RESISTOR,CHIP 4.7K 1/16W(1608)
R4	1-218-708-11	s	RESISTOR,CHIP 4.7K 1/16W(1608)
R5	1-218-708-11	s	RESISTOR,CHIP 4.7K 1/16W(1608)
R6	1-218-708-11	s	RESISTOR,CHIP 4.7K 1/16W(1608)
R7	1-218-708-11	s	RESISTOR,CHIP 4.7K 1/16W(1608)
R8	1-218-708-11	s	RESISTOR,CHIP 4.7K 1/16W(1608)
R9	1-218-716-11	s	RESISTOR,CHIP 10K 1/16W(1608)
R10	1-218-716-11	s	RESISTOR,CHIP 10K 1/16W(1608)

(HP-101 BOARD)

Ref. No. or Q'ty	Part No.	SP	Description
R11	1-218-716-11	s	RESISTOR,CHIP 10K 1/16W(1608)
R12	1-218-716-11	s	RESISTOR,CHIP 10K 1/16W(1608)
R13	1-218-644-11	s	RESISTOR,CHIP 10 1/16W
R14	1-218-644-11	s	RESISTOR,CHIP 10 1/16W
R15	1-218-702-11	s	RESISTOR CHIP 2.7K 1/16W(1608)
R16	1-218-702-11	s	RESISTOR CHIP 2.7K 1/16W(1608)
R17	1-218-716-11	s	RESISTOR,CHIP 10K 1/16W(1608)
R18	1-218-716-11	s	RESISTOR,CHIP 10K 1/16W(1608)
R19	1-218-644-11	s	RESISTOR,CHIP 10 1/16W
R20	1-218-644-11	s	RESISTOR,CHIP 10 1/16W
R21	1-218-818-11	s	RESISTOR, CHIP 220 1/2W (4532)
R22	1-218-818-11	s	RESISTOR, CHIP 220 1/2W (4532)
R23	1-218-692-11	s	RESISTOR,CHIP 1.0K 1/16W(1608)
R24	1-218-818-11	s	RESISTOR, CHIP 220 1/2W (4532)
R25	1-218-818-11	s	RESISTOR, CHIP 220 1/2W (4532)
R26	1-218-692-11	s	RESISTOR,CHIP 1.0K 1/16W(1608)
R27	1-218-692-11	s	RESISTOR,CHIP 1.0K 1/16W(1608)
R28	1-218-692-11	s	RESISTOR,CHIP 1.0K 1/16W(1608)
R29	1-218-692-11	s	RESISTOR,CHIP 1.0K 1/16W(1608)
RV1	1-227-177-11	s	POTENTIOMETER 20K
RY1	1-755-379-11	s	RELAY

HPR-1 BOARD for HDW RECORDER

[Lot No. 261 -] HDW-2000, M2000/P
[Lot No. 4C2 -] HDW-D2000
[Lot No. 462 -] HDW-S2000/P

*1: [Lot No. 261 -] [Board No. suffix 14 -]
*2: [Lot No. 3C1 -] [Board No. suffix 15 -]

Ref. No. or Q'ty	Part No.	SP	Description
1pc	A-8327-038-B	s	MOUNTED CIRCUIT BOARD, HPR-1
6pcs	7-682-902-11	s	SCREW +PWH 2.6X5
1pc	3-179-084-11	s	LEVER (R), C BOARD
1pc	3-179-085-11	s	LEVER (L), C BOARD
C100	1-107-826-11	s	CAPACITOR,CHIP CERAMIC 0.1MF
C101	1-107-826-11	s	CAPACITOR,CHIP CERAMIC 0.1MF
C102	1-107-826-11	s	CAPACITOR,CHIP CERAMIC 0.1MF
C103 *2	1-107-826-11	s	CAPACITOR,CHIP CERAMIC 0.1MF
C104 *2	1-107-826-11	s	CAPACITOR,CHIP CERAMIC 0.1MF
C106	1-107-826-11	s	CAPACITOR,CHIP CERAMIC 0.1MF
C107	1-107-826-11	s	CAPACITOR,CHIP CERAMIC 0.1MF
C108	1-107-826-11	s	CAPACITOR,CHIP CERAMIC 0.1MF
C109	1-107-826-11	s	CAPACITOR,CHIP CERAMIC 0.1MF
C110	1-107-826-11	s	CAPACITOR,CHIP CERAMIC 0.1MF
C112	1-162-970-11	s	CAPACITOR CERAMIC 0.01MF/25V B
C113	1-162-970-11	s	CAPACITOR CERAMIC 0.01MF/25V B
C114	1-162-970-11	s	CAPACITOR CERAMIC 0.01MF/25V B
C115	1-162-970-11	s	CAPACITOR CERAMIC 0.01MF/25V B
C116	1-162-970-11	s	CAPACITOR CERAMIC 0.01MF/25V B
C117	1-162-970-11	s	CAPACITOR CERAMIC 0.01MF/25V B
C118	1-162-970-11	s	CAPACITOR CERAMIC 0.01MF/25V B
C119	1-162-970-11	s	CAPACITOR CERAMIC 0.01MF/25V B
C120	1-162-970-11	s	CAPACITOR CERAMIC 0.01MF/25V B
C121	1-162-970-11	s	CAPACITOR CERAMIC 0.01MF/25V B
C122	1-162-970-11	s	CAPACITOR CERAMIC 0.01MF/25V B
C123	1-162-970-11	s	CAPACITOR CERAMIC 0.01MF/25V B
C124	1-162-970-11	s	CAPACITOR CERAMIC 0.01MF/25V B
C125	1-162-970-11	s	CAPACITOR CERAMIC 0.01MF/25V B
C126	1-162-970-11	s	CAPACITOR CERAMIC 0.01MF/25V B
C127	1-162-970-11	s	CAPACITOR CERAMIC 0.01MF/25V B
C128	1-162-970-11	s	CAPACITOR CERAMIC 0.01MF/25V B
C129	1-162-970-11	s	CAPACITOR CERAMIC 0.01MF/25V B
C130	1-162-970-11	s	CAPACITOR CERAMIC 0.01MF/25V B
C131	1-162-970-11	s	CAPACITOR CERAMIC 0.01MF/25V B
C132	1-162-970-11	s	CAPACITOR CERAMIC 0.01MF/25V B
C133	1-162-970-11	s	CAPACITOR CERAMIC 0.01MF/25V B
C140	1-107-826-11	s	CAPACITOR,CHIP CERAMIC 0.1MF
C141	1-107-826-11	s	CAPACITOR,CHIP CERAMIC 0.1MF
C150 *2	deleted		
*1	1-127-708-11	s	CAP, POLYPYRROLE 100MF
C151	1-162-970-11	s	CAPACITOR CERAMIC 0.01MF/25V B
C152	1-162-970-11	s	CAPACITOR CERAMIC 0.01MF/25V B
C153	1-162-970-11	s	CAPACITOR CERAMIC 0.01MF/25V B
C154	1-162-970-11	s	CAPACITOR CERAMIC 0.01MF/25V B
C155	1-162-970-11	s	CAPACITOR CERAMIC 0.01MF/25V B
C156	1-162-970-11	s	CAPACITOR CERAMIC 0.01MF/25V B
C157	1-162-970-11	s	CAPACITOR CERAMIC 0.01MF/25V B
C158	1-162-970-11	s	CAPACITOR CERAMIC 0.01MF/25V B
C159	1-162-970-11	s	CAPACITOR CERAMIC 0.01MF/25V B
C160 *2	deleted		
*1	1-131-603-11	s	CAP, POLYPYRROLE 100MF
C161	1-107-826-11	s	CAPACITOR,CHIP CERAMIC 0.1MF
C162 *2	1-127-692-11	s	CAP, CHIP CERAMIC 10MF B 3216
C163 *2	1-127-692-11	s	CAP, CHIP CERAMIC 10MF B 3216

Ref. No. or Q'ty	Part No.	SP	Description
C164 *2	1-127-692-11	s	CAP, CHIP CERAMIC 10MF B 3216
C165 *2	1-127-692-11	s	CAP, CHIP CERAMIC 10MF B 3216
C166 *2	1-127-692-11	s	CAP, CHIP CERAMIC 10MF B 3216
C167 *2	1-127-692-11	s	CAP, CHIP CERAMIC 10MF B 3216
C200	1-162-970-11	s	CAPACITOR CERAMIC 0.01MF/25V B
C201	1-162-970-11	s	CAPACITOR CERAMIC 0.01MF/25V B
C202	1-162-970-11	s	CAPACITOR CERAMIC 0.01MF/25V B
C203	1-162-970-11	s	CAPACITOR CERAMIC 0.01MF/25V B
C204	1-162-970-11	s	CAPACITOR CERAMIC 0.01MF/25V B
C205	1-162-970-11	s	CAPACITOR CERAMIC 0.01MF/25V B
C206	1-162-970-11	s	CAPACITOR CERAMIC 0.01MF/25V B
C207	1-162-970-11	s	CAPACITOR CERAMIC 0.01MF/25V B
C208	1-162-970-11	s	CAPACITOR CERAMIC 0.01MF/25V B
C209	1-162-970-11	s	CAPACITOR CERAMIC 0.01MF/25V B
C210	1-162-970-11	s	CAPACITOR CERAMIC 0.01MF/25V B
C211	1-162-970-11	s	CAPACITOR CERAMIC 0.01MF/25V B
C212	1-162-970-11	s	CAPACITOR CERAMIC 0.01MF/25V B
C213	1-162-970-11	s	CAPACITOR CERAMIC 0.01MF/25V B
C214	1-162-970-11	s	CAPACITOR CERAMIC 0.01MF/25V B
C215	1-162-970-11	s	CAPACITOR CERAMIC 0.01MF/25V B
C216	1-162-970-11	s	CAPACITOR CERAMIC 0.01MF/25V B
C217	1-162-970-11	s	CAPACITOR CERAMIC 0.01MF/25V B
C218	1-162-970-11	s	CAPACITOR CERAMIC 0.01MF/25V B
C219	1-162-970-11	s	CAPACITOR CERAMIC 0.01MF/25V B
C220	1-162-970-11	s	CAPACITOR CERAMIC 0.01MF/25V B
C221	1-162-970-11	s	CAPACITOR CERAMIC 0.01MF/25V B
C222	1-162-970-11	s	CAPACITOR CERAMIC 0.01MF/25V B
C223	1-162-970-11	s	CAPACITOR CERAMIC 0.01MF/25V B
C224	1-162-970-11	s	CAPACITOR CERAMIC 0.01MF/25V B
C225	1-162-970-11	s	CAPACITOR CERAMIC 0.01MF/25V B
C226	1-162-970-11	s	CAPACITOR CERAMIC 0.01MF/25V B
C227	1-162-970-11	s	CAPACITOR CERAMIC 0.01MF/25V B
C228	1-162-970-11	s	CAPACITOR CERAMIC 0.01MF/25V B
C229	1-162-970-11	s	CAPACITOR CERAMIC 0.01MF/25V B
C230	1-162-970-11	s	CAPACITOR CERAMIC 0.01MF/25V B
C231 *2	deleted		
*1	1-127-708-11	s	CAP, POLYPYRROLE 100MF
C232 *2	deleted		
*1	1-131-603-11	s	CAP, POLYPYRROLE 100MF
C233	1-107-826-11	s	CAPACITOR,CHIP CERAMIC 0.1MF
C234	1-107-826-11	s	CAPACITOR,CHIP CERAMIC 0.1MF
C235	1-107-826-11	s	CAPACITOR,CHIP CERAMIC 0.1MF
C236	1-107-826-11	s	CAPACITOR,CHIP CERAMIC 0.1MF
C237	1-107-826-11	s	CAPACITOR,CHIP CERAMIC 0.1MF
C238	1-107-826-11	s	CAPACITOR,CHIP CERAMIC 0.1MF
C239	1-107-826-11	s	CAPACITOR,CHIP CERAMIC 0.1MF
C240	1-107-826-11	s	CAPACITOR,CHIP CERAMIC 0.1MF
C241	1-107-826-11	s	CAPACITOR,CHIP CERAMIC 0.1MF
C242	1-107-826-11	s	CAPACITOR,CHIP CERAMIC 0.1MF
C243	1-107-826-11	s	CAPACITOR,CHIP CERAMIC 0.1MF
C244	1-107-826-11	s	CAPACITOR,CHIP CERAMIC 0.1MF
C245	1-107-826-11	s	CAPACITOR,CHIP CERAMIC 0.1MF
C246	1-162-970-11	s	CAPACITOR CERAMIC 0.01MF/25V B
C247 *2	deleted		
*1	1-162-970-11	s	CAPACITOR CERAMIC 0.01MF/25V B
C248 *2	deleted		
*1	1-162-970-11	s	CAPACITOR CERAMIC 0.01MF/25V B
C249 *2	deleted		
*1	1-162-970-11	s	CAPACITOR CERAMIC 0.01MF/25V B
C250 *2	deleted		
*1	1-162-970-11	s	CAPACITOR CERAMIC 0.01MF/25V B

(HPR-1 BOARD for HDW RECORDER)

Ref. No. or Q'ty	Part No.	SP	Description
C251	*2 deleted		
	*1 1-162-970-11	s	CAPACITOR CERAMIC 0.01MF/25V B
C252	*2 deleted		
	*1 1-162-970-11	s	CAPACITOR CERAMIC 0.01MF/25V B
C253	*2 deleted		
	*1 1-162-970-11	s	CAPACITOR CERAMIC 0.01MF/25V B
C254	*2 deleted		
	*1 1-162-970-11	s	CAPACITOR CERAMIC 0.01MF/25V B
C255	*2 deleted		
	*1 1-162-970-11	s	CAPACITOR CERAMIC 0.01MF/25V B
C256	*2 deleted		
	*1 1-162-970-11	s	CAPACITOR CERAMIC 0.01MF/25V B
C257	*2 deleted		
	*1 1-162-970-11	s	CAPACITOR CERAMIC 0.01MF/25V B
C258	*2 deleted		
	*1 1-162-970-11	s	CAPACITOR CERAMIC 0.01MF/25V B
C259	*2 deleted		
	*1 1-162-970-11	s	CAPACITOR CERAMIC 0.01MF/25V B
C260	*2 deleted		
	*1 1-162-970-11	s	CAPACITOR CERAMIC 0.01MF/25V B
C261	*2 deleted		
	*1 1-162-970-11	s	CAPACITOR CERAMIC 0.01MF/25V B
C262	*2 deleted		
	*1 1-162-970-11	s	CAPACITOR CERAMIC 0.01MF/25V B
C263	*2 deleted		
	*1 1-162-970-11	s	CAPACITOR CERAMIC 0.01MF/25V B
C264	*2 deleted		
	*1 1-162-970-11	s	CAPACITOR CERAMIC 0.01MF/25V B
C265	*2 deleted		
	*1 1-162-970-11	s	CAPACITOR CERAMIC 0.01MF/25V B
C266	*2 deleted		
	*1 1-162-970-11	s	CAPACITOR CERAMIC 0.01MF/25V B
C267	*2 deleted		
	*1 1-162-970-11	s	CAPACITOR CERAMIC 0.01MF/25V B
C268	*2 deleted		
	*1 1-162-970-11	s	CAPACITOR CERAMIC 0.01MF/25V B
C269	*2 deleted		
	*1 1-162-970-11	s	CAPACITOR CERAMIC 0.01MF/25V B
C270	*2 deleted		
	*1 1-162-970-11	s	CAPACITOR CERAMIC 0.01MF/25V B
C271	*2 deleted		
	*1 1-162-970-11	s	CAPACITOR CERAMIC 0.01MF/25V B
C272	*2 deleted		
	*1 1-162-970-11	s	CAPACITOR CERAMIC 0.01MF/25V B
C273	*2 deleted		
	*1 1-162-970-11	s	CAPACITOR CERAMIC 0.01MF/25V B
C274	*2 deleted		
	*1 1-162-970-11	s	CAPACITOR CERAMIC 0.01MF/25V B
C275	*2 deleted		
	*1 1-162-970-11	s	CAPACITOR CERAMIC 0.01MF/25V B
C276	*2 deleted		
	*1 1-162-970-11	s	CAPACITOR CERAMIC 0.01MF/25V B
C277	*2 deleted		
	*1 1-127-708-11	s	CAP, POLYPYRROLE 100MF
C278	*2 deleted		
	*1 1-131-603-11	s	CAP, POLYPYRROLE 100MF
C279	*2 deleted		
	*1 1-107-826-11	s	CAPACITOR,CHIP CERAMIC 0.1MF
C280	*2 deleted		
	*1 1-107-826-11	s	CAPACITOR,CHIP CERAMIC 0.1MF
C281	*2 deleted		
	*1 1-107-826-11	s	CAPACITOR,CHIP CERAMIC 0.1MF
C282	*2 deleted		
	*1 1-107-826-11	s	CAPACITOR,CHIP CERAMIC 0.1MF

(HPR-1 BOARD for HDW RECORDER)

Ref. No. or Q'ty	Part No.	SP	Description
C283	*2 deleted		
	*1 1-107-826-11	s	CAPACITOR,CHIP CERAMIC 0.1MF
C284	*2 deleted		
	1-107-826-11	s	CAPACITOR,CHIP CERAMIC 0.1MF
C285	1-107-826-11	s	CAPACITOR,CHIP CERAMIC 0.1MF
C286	1-107-826-11	s	CAPACITOR,CHIP CERAMIC 0.1MF
C287	1-107-826-11	s	CAPACITOR,CHIP CERAMIC 0.1MF
C288	1-107-826-11	s	CAPACITOR,CHIP CERAMIC 0.1MF
C289	1-107-826-11	s	CAPACITOR,CHIP CERAMIC 0.1MF
C290	1-107-826-11	s	CAPACITOR,CHIP CERAMIC 0.1MF
C291	1-107-826-11	s	CAPACITOR,CHIP CERAMIC 0.1MF
C292	1-107-826-11	s	CAPACITOR,CHIP CERAMIC 0.1MF
C293	1-107-826-11	s	CAPACITOR,CHIP CERAMIC 0.1MF
C294	1-107-826-11	s	CAPACITOR,CHIP CERAMIC 0.1MF
C295	1-162-970-11	s	CAPACITOR CERAMIC 0.01MF/25V B
C296	1-162-970-11	s	CAPACITOR CERAMIC 0.01MF/25V B
C297	1-162-970-11	s	CAPACITOR CERAMIC 0.01MF/25V B
C298	1-162-970-11	s	CAPACITOR CERAMIC 0.01MF/25V B
C299	1-162-970-11	s	CAPACITOR CERAMIC 0.01MF/25V B
C300	1-107-826-11	s	CAPACITOR,CHIP CERAMIC 0.1MF
C303	1-107-826-11	s	CAPACITOR,CHIP CERAMIC 0.1MF
C304	1-107-826-11	s	CAPACITOR,CHIP CERAMIC 0.1MF
C305	*2 deleted		
	*1 1-127-708-11	s	CAP, POLYPYRROLE 100MF
C306	1-107-826-11	s	CAPACITOR,CHIP CERAMIC 0.1MF
C307	1-107-826-11	s	CAPACITOR,CHIP CERAMIC 0.1MF
C308	1-107-826-11	s	CAPACITOR,CHIP CERAMIC 0.1MF
C309	*2 1-127-692-11	s	CAP, CHIP CERAMIC 10MF B 3216
C310	*2 1-127-692-11	s	CAP, CHIP CERAMIC 10MF B 3216
C311	*2 1-127-692-11	s	CAP, CHIP CERAMIC 10MF B 3216
C312	*2 1-127-692-11	s	CAP, CHIP CERAMIC 10MF B 3216
C313	*2 deleted		
	*1 1-131-603-11	s	CAP, POLYPYRROLE 100MF
C315	1-162-970-11	s	CAPACITOR CERAMIC 0.01MF/25V B
C316	1-162-970-11	s	CAPACITOR CERAMIC 0.01MF/25V B
C317	1-162-970-11	s	CAPACITOR CERAMIC 0.01MF/25V B
C318	1-162-970-11	s	CAPACITOR CERAMIC 0.01MF/25V B
C319	1-162-970-11	s	CAPACITOR CERAMIC 0.01MF/25V B
C320	1-162-970-11	s	CAPACITOR CERAMIC 0.01MF/25V B
C321	1-162-970-11	s	CAPACITOR CERAMIC 0.01MF/25V B
C322	1-162-970-11	s	CAPACITOR CERAMIC 0.01MF/25V B
C323	1-162-970-11	s	CAPACITOR CERAMIC 0.01MF/25V B
C324	1-162-970-11	s	CAPACITOR CERAMIC 0.01MF/25V B
C325	1-162-970-11	s	CAPACITOR CERAMIC 0.01MF/25V B
C326	1-162-970-11	s	CAPACITOR CERAMIC 0.01MF/25V B
C327	1-162-970-11	s	CAPACITOR CERAMIC 0.01MF/25V B
C328	1-162-970-11	s	CAPACITOR CERAMIC 0.01MF/25V B
C329	1-162-970-11	s	CAPACITOR CERAMIC 0.01MF/25V B
C330	1-162-970-11	s	CAPACITOR CERAMIC 0.01MF/25V B
C331	1-162-970-11	s	CAPACITOR CERAMIC 0.01MF/25V B
C332	1-162-970-11	s	CAPACITOR CERAMIC 0.01MF/25V B
C333	1-162-970-11	s	CAPACITOR CERAMIC 0.01MF/25V B
C334	1-162-970-11	s	CAPACITOR CERAMIC 0.01MF/25V B
C335	1-162-970-11	s	CAPACITOR CERAMIC 0.01MF/25V B
C336	1-162-970-11	s	CAPACITOR CERAMIC 0.01MF/25V B
C337	1-162-970-11	s	CAPACITOR CERAMIC 0.01MF/25V B
C338	1-162-970-11	s	CAPACITOR CERAMIC 0.01MF/25V B
C339	1-162-970-11	s	CAPACITOR CERAMIC 0.01MF/25V B
C340	1-162-970-11	s	CAPACITOR CERAMIC 0.01MF/25V B

(HPR-1 BOARD for HDW RECORDER)

Ref. No. or Q'ty	Part No.	SP	Description
C341	1-162-970-11	s	CAPACITOR CERAMIC 0.01MF/25V B
C342	1-162-970-11	s	CAPACITOR CERAMIC 0.01MF/25V B
C343	1-162-970-11	s	CAPACITOR CERAMIC 0.01MF/25V B
C344	1-162-970-11	s	CAPACITOR CERAMIC 0.01MF/25V B
C345	1-162-970-11	s	CAPACITOR CERAMIC 0.01MF/25V B
C346	1-162-970-11	s	CAPACITOR CERAMIC 0.01MF/25V B
C347	1-162-970-11	s	CAPACITOR CERAMIC 0.01MF/25V B
C348	1-162-970-11	s	CAPACITOR CERAMIC 0.01MF/25V B
C351	1-162-970-11	s	CAPACITOR CERAMIC 0.01MF/25V B
C353	1-162-970-11	s	CAPACITOR CERAMIC 0.01MF/25V B
C356	1-162-970-11	s	CAPACITOR CERAMIC 0.01MF/25V B
C357	*2 deleted		
	*1 1-131-603-11	s	CAP, POLYPYRROLE 100MF
C358	1-107-826-11	s	CAPACITOR,CHIP CERAMIC 0.1MF
C359	1-107-826-11	s	CAPACITOR,CHIP CERAMIC 0.1MF
C360	*2 1-127-692-11	s	CAP, CHIP CERAMIC 10MF B 3216
C361	*2 1-127-692-11	s	CAP, CHIP CERAMIC 10MF B 3216
C362	*2 1-127-692-11	s	CAP, CHIP CERAMIC 10MF B 3216
C363	*2 1-127-692-11	s	CAP, CHIP CERAMIC 10MF B 3216
C368	*2 1-165-870-21	s	CAPACITOR, ELECT 100MF(6.3X6)
C400	*2 deleted		
	1-107-826-11	s	CAPACITOR,CHIP CERAMIC 0.1MF
C401	*2 deleted		
	*1 1-107-826-11	s	CAPACITOR,CHIP CERAMIC 0.1MF
C402	*2 deleted		
	*1 1-107-826-11	s	CAPACITOR,CHIP CERAMIC 0.1MF
C403	*2 deleted		
	*1 1-131-603-11	s	CAP, POLYPYRROLE 100MF
C404	*2 deleted		
	*1 1-107-826-11	s	CAPACITOR,CHIP CERAMIC 0.1MF
C405	*2 deleted		
	*1 1-107-826-11	s	CAPACITOR,CHIP CERAMIC 0.1MF
C406	*2 deleted		
	*1 1-107-826-11	s	CAPACITOR,CHIP CERAMIC 0.1MF
C407	*2 deleted		
	*1 1-107-826-11	s	CAPACITOR,CHIP CERAMIC 0.1MF
C408	*2 deleted		
	*1 1-162-970-11	s	CAPACITOR CERAMIC 0.01MF/25V B
C455	*2 deleted		
	*1 1-107-826-11	s	CAPACITOR,CHIP CERAMIC 0.1MF
C500	1-107-826-11	s	CAPACITOR,CHIP CERAMIC 0.1MF
C501	1-107-826-11	s	CAPACITOR,CHIP CERAMIC 0.1MF
C502	1-107-826-11	s	CAPACITOR,CHIP CERAMIC 0.1MF
C506	1-107-826-11	s	CAPACITOR,CHIP CERAMIC 0.1MF
C507	1-107-826-11	s	CAPACITOR,CHIP CERAMIC 0.1MF
C508	1-107-826-11	s	CAPACITOR,CHIP CERAMIC 0.1MF
C509	1-107-826-11	s	CAPACITOR,CHIP CERAMIC 0.1MF
C510	1-107-826-11	s	CAPACITOR,CHIP CERAMIC 0.1MF
C511	1-107-826-11	s	CAPACITOR,CHIP CERAMIC 0.1MF
C512	1-107-826-11	s	CAPACITOR,CHIP CERAMIC 0.1MF
C513	1-107-826-11	s	CAPACITOR,CHIP CERAMIC 0.1MF
C514	1-107-826-11	s	CAPACITOR,CHIP CERAMIC 0.1MF
C515	1-107-826-11	s	CAPACITOR,CHIP CERAMIC 0.1MF
C516	1-107-826-11	s	CAPACITOR,CHIP CERAMIC 0.1MF
C517	1-107-826-11	s	CAPACITOR,CHIP CERAMIC 0.1MF
C518	*2 1-107-826-11	s	CAPACITOR,CHIP CERAMIC 0.1MF
C570	1-125-889-11	s	CAPACITOR, CERAMIC 2.2MF
C571	1-125-889-11	s	CAPACITOR, CERAMIC 2.2MF
C572	1-127-692-11	s	CAP, CHIP CERAMIC 10MF B 3216
C573	*2 1-107-826-11	s	CAPACITOR,CHIP CERAMIC 0.1MF
C600	1-162-970-11	s	CAPACITOR CERAMIC 0.01MF/25V B

(HPR-1 BOARD for HDW RECORDER)

Ref. No. or Q'ty	Part No.	SP	Description
C601	1-162-970-11	s	CAPACITOR CERAMIC 0.01MF/25V B
C602	1-162-970-11	s	CAPACITOR CERAMIC 0.01MF/25V B
C603	1-162-970-11	s	CAPACITOR CERAMIC 0.01MF/25V B
C604	1-162-970-11	s	CAPACITOR CERAMIC 0.01MF/25V B
C605	1-162-970-11	s	CAPACITOR CERAMIC 0.01MF/25V B
C606	1-162-970-11	s	CAPACITOR CERAMIC 0.01MF/25V B
C607	1-162-970-11	s	CAPACITOR CERAMIC 0.01MF/25V B
C608	1-162-970-11	s	CAPACITOR CERAMIC 0.01MF/25V B
C609	1-162-970-11	s	CAPACITOR CERAMIC 0.01MF/25V B
C610	1-162-970-11	s	CAPACITOR CERAMIC 0.01MF/25V B
C611	1-162-970-11	s	CAPACITOR CERAMIC 0.01MF/25V B
C612	1-162-970-11	s	CAPACITOR CERAMIC 0.01MF/25V B
C613	1-162-970-11	s	CAPACITOR CERAMIC 0.01MF/25V B
C614	1-162-970-11	s	CAPACITOR CERAMIC 0.01MF/25V B
C615	1-162-970-11	s	CAPACITOR CERAMIC 0.01MF/25V B
C616	1-162-970-11	s	CAPACITOR CERAMIC 0.01MF/25V B
C617	1-162-970-11	s	CAPACITOR CERAMIC 0.01MF/25V B
C618	1-162-970-11	s	CAPACITOR CERAMIC 0.01MF/25V B
C619	1-162-970-11	s	CAPACITOR CERAMIC 0.01MF/25V B
C620	1-162-970-11	s	CAPACITOR CERAMIC 0.01MF/25V B
C621	1-162-970-11	s	CAPACITOR CERAMIC 0.01MF/25V B
C622	1-162-970-11	s	CAPACITOR CERAMIC 0.01MF/25V B
C623	1-162-970-11	s	CAPACITOR CERAMIC 0.01MF/25V B
C624	1-162-970-11	s	CAPACITOR CERAMIC 0.01MF/25V B
C625	1-162-970-11	s	CAPACITOR CERAMIC 0.01MF/25V B
C626	1-162-970-11	s	CAPACITOR CERAMIC 0.01MF/25V B
C627	1-162-970-11	s	CAPACITOR CERAMIC 0.01MF/25V B
C628	1-162-970-11	s	CAPACITOR CERAMIC 0.01MF/25V B
C629	1-162-970-11	s	CAPACITOR CERAMIC 0.01MF/25V B
C630	1-162-970-11	s	CAPACITOR CERAMIC 0.01MF/25V B
C631	1-162-970-11	s	CAPACITOR CERAMIC 0.01MF/25V B
C632	*2 1-127-692-11	s	CAP, CHIP CERAMIC 10MF B 3216
	*1 1-127-708-11	s	CAP, POLYPYRROLE 100MF
C633	*2 deleted		
	*1 1-131-603-11	s	CAP, POLYPYRROLE 100MF
C634	1-107-826-11	s	CAPACITOR,CHIP CERAMIC 0.1MF
C635	1-107-826-11	s	CAPACITOR,CHIP CERAMIC 0.1MF
C636	1-107-826-11	s	CAPACITOR,CHIP CERAMIC 0.1MF
C637	1-107-826-11	s	CAPACITOR,CHIP CERAMIC 0.1MF
C638	1-107-826-11	s	CAPACITOR,CHIP CERAMIC 0.1MF
C639	1-107-826-11	s	CAPACITOR,CHIP CERAMIC 0.1MF
C640	1-107-826-11	s	CAPACITOR,CHIP CERAMIC 0.1MF
C641	1-107-826-11	s	CAPACITOR,CHIP CERAMIC 0.1MF
C642	1-107-826-11	s	CAPACITOR,CHIP CERAMIC 0.1MF
C643	1-107-826-11	s	CAPACITOR,CHIP CERAMIC 0.1MF
C644	1-107-826-11	s	CAPACITOR,CHIP CERAMIC 0.1MF
C645	1-107-826-11	s	CAPACITOR,CHIP CERAMIC 0.1MF
C646	1-162-970-11	s	CAPACITOR CERAMIC 0.01MF/25V B
C647	1-162-970-11	s	CAPACITOR CERAMIC 0.01MF/25V B
C648	1-162-970-11	s	CAPACITOR CERAMIC 0.01MF/25V B
C649	1-162-970-11	s	CAPACITOR CERAMIC 0.01MF/25V B
C650	1-162-970-11	s	CAPACITOR CERAMIC 0.01MF/25V B
C651	1-162-970-11	s	CAPACITOR CERAMIC 0.01MF/25V B
C652	1-162-970-11	s	CAPACITOR CERAMIC 0.01MF/25V B
C653	1-162-970-11	s	CAPACITOR CERAMIC 0.01MF/25V B
C654	1-162-970-11	s	CAPACITOR CERAMIC 0.01MF/25V B
C655	1-162-970-11	s	CAPACITOR CERAMIC 0.01MF/25V B
C656	1-162-970-11	s	CAPACITOR CERAMIC 0.01MF/25V B
C657	1-162-970-11	s	CAPACITOR CERAMIC 0.01MF/25V B

(HPR-1 BOARD for HDW RECORDER)

Ref. No. or Q'ty	Part No.	SP	Description
C658	1-162-970-11	s	CAPACITOR CERAMIC 0.01MF/25V B
C659	1-162-970-11	s	CAPACITOR CERAMIC 0.01MF/25V B
C660	1-162-970-11	s	CAPACITOR CERAMIC 0.01MF/25V B
C661	1-162-970-11	s	CAPACITOR CERAMIC 0.01MF/25V B
C662	1-162-970-11	s	CAPACITOR CERAMIC 0.01MF/25V B
C663	1-162-970-11	s	CAPACITOR CERAMIC 0.01MF/25V B
C664	1-162-970-11	s	CAPACITOR CERAMIC 0.01MF/25V B
C665	1-162-970-11	s	CAPACITOR CERAMIC 0.01MF/25V B
C666	1-162-970-11	s	CAPACITOR CERAMIC 0.01MF/25V B
C667	1-162-970-11	s	CAPACITOR CERAMIC 0.01MF/25V B
C668	1-162-970-11	s	CAPACITOR CERAMIC 0.01MF/25V B
C669	1-162-970-11	s	CAPACITOR CERAMIC 0.01MF/25V B
C670	1-162-970-11	s	CAPACITOR CERAMIC 0.01MF/25V B
C671	1-162-970-11	s	CAPACITOR CERAMIC 0.01MF/25V B
C672	1-162-970-11	s	CAPACITOR CERAMIC 0.01MF/25V B
C673	1-162-970-11	s	CAPACITOR CERAMIC 0.01MF/25V B
C674	1-162-970-11	s	CAPACITOR CERAMIC 0.01MF/25V B
C675	1-162-970-11	s	CAPACITOR CERAMIC 0.01MF/25V B
C676	1-162-970-11	s	CAPACITOR CERAMIC 0.01MF/25V B
C677	1-162-970-11	s	CAPACITOR CERAMIC 0.01MF/25V B
C678	*2 deleted		
	*1 1-127-708-11	s	CAP, POLYPYRROLE 100MF
C679	*2 deleted		
	*1 1-131-603-11	s	CAP, POLYPYRROLE 100MF
C680	1-107-826-11	s	CAPACITOR,CHIP CERAMIC 0.1MF
C681	1-107-826-11	s	CAPACITOR,CHIP CERAMIC 0.1MF
C682	1-107-826-11	s	CAPACITOR,CHIP CERAMIC 0.1MF
C683	1-107-826-11	s	CAPACITOR,CHIP CERAMIC 0.1MF
C684	1-107-826-11	s	CAPACITOR,CHIP CERAMIC 0.1MF
C685	1-107-826-11	s	CAPACITOR,CHIP CERAMIC 0.1MF
C686	1-107-826-11	s	CAPACITOR,CHIP CERAMIC 0.1MF
C687	1-107-826-11	s	CAPACITOR,CHIP CERAMIC 0.1MF
C688	1-107-826-11	s	CAPACITOR,CHIP CERAMIC 0.1MF
C689	1-107-826-11	s	CAPACITOR,CHIP CERAMIC 0.1MF
C690	1-107-826-11	s	CAPACITOR,CHIP CERAMIC 0.1MF
C691	1-107-826-11	s	CAPACITOR,CHIP CERAMIC 0.1MF
C692	1-162-970-11	s	CAPACITOR CERAMIC 0.01MF/25V B
C693	1-162-970-11	s	CAPACITOR CERAMIC 0.01MF/25V B
C694	1-162-970-11	s	CAPACITOR CERAMIC 0.01MF/25V B
C695	1-162-970-11	s	CAPACITOR CERAMIC 0.01MF/25V B
C696	1-162-970-11	s	CAPACITOR CERAMIC 0.01MF/25V B
C697	1-162-970-11	s	CAPACITOR CERAMIC 0.01MF/25V B
C698	1-162-970-11	s	CAPACITOR CERAMIC 0.01MF/25V B
C699	1-162-970-11	s	CAPACITOR CERAMIC 0.01MF/25V B
C700	1-162-970-11	s	CAPACITOR CERAMIC 0.01MF/25V B
C701	1-162-970-11	s	CAPACITOR CERAMIC 0.01MF/25V B
C702	1-162-970-11	s	CAPACITOR CERAMIC 0.01MF/25V B
C703	1-162-970-11	s	CAPACITOR CERAMIC 0.01MF/25V B
C704	1-162-970-11	s	CAPACITOR CERAMIC 0.01MF/25V B
C705	1-162-970-11	s	CAPACITOR CERAMIC 0.01MF/25V B
C706	1-162-970-11	s	CAPACITOR CERAMIC 0.01MF/25V B
C707	1-162-970-11	s	CAPACITOR CERAMIC 0.01MF/25V B
C708	1-162-970-11	s	CAPACITOR CERAMIC 0.01MF/25V B
C709	1-162-970-11	s	CAPACITOR CERAMIC 0.01MF/25V B
C710	1-162-970-11	s	CAPACITOR CERAMIC 0.01MF/25V B
C711	1-162-970-11	s	CAPACITOR CERAMIC 0.01MF/25V B
C712	1-162-970-11	s	CAPACITOR CERAMIC 0.01MF/25V B
C713	1-162-970-11	s	CAPACITOR CERAMIC 0.01MF/25V B
C714	1-162-970-11	s	CAPACITOR CERAMIC 0.01MF/25V B

(HPR-1 BOARD for HDW RECORDER)

Ref. No. or Q'ty	Part No.	SP	Description
C715	1-162-970-11	s	CAPACITOR CERAMIC 0.01MF/25V B
C716	1-162-970-11	s	CAPACITOR CERAMIC 0.01MF/25V B
C717	1-162-970-11	s	CAPACITOR CERAMIC 0.01MF/25V B
C718	1-162-970-11	s	CAPACITOR CERAMIC 0.01MF/25V B
C719	1-162-970-11	s	CAPACITOR CERAMIC 0.01MF/25V B
C720	1-162-970-11	s	CAPACITOR CERAMIC 0.01MF/25V B
C721	1-162-970-11	s	CAPACITOR CERAMIC 0.01MF/25V B
C722	1-162-970-11	s	CAPACITOR CERAMIC 0.01MF/25V B
C723	1-162-970-11	s	CAPACITOR CERAMIC 0.01MF/25V B
C724	1-162-970-11	s	CAPACITOR CERAMIC 0.01MF/25V B
C725	1-162-970-11	s	CAPACITOR CERAMIC 0.01MF/25V B
C726	1-162-970-11	s	CAPACITOR CERAMIC 0.01MF/25V B
C727	1-162-970-11	s	CAPACITOR CERAMIC 0.01MF/25V B
C728	1-162-970-11	s	CAPACITOR CERAMIC 0.01MF/25V B
C729	1-107-826-11	s	CAPACITOR,CHIP CERAMIC 0.1MF
C730	1-107-826-11	s	CAPACITOR,CHIP CERAMIC 0.1MF
C731	1-107-826-11	s	CAPACITOR,CHIP CERAMIC 0.1MF
C732	1-107-826-11	s	CAPACITOR,CHIP CERAMIC 0.1MF
C733	1-107-826-11	s	CAPACITOR,CHIP CERAMIC 0.1MF
C734	1-107-826-11	s	CAPACITOR,CHIP CERAMIC 0.1MF
C735	1-107-826-11	s	CAPACITOR,CHIP CERAMIC 0.1MF
C736	1-107-826-11	s	CAPACITOR,CHIP CERAMIC 0.1MF
C737	1-107-826-11	s	CAPACITOR,CHIP CERAMIC 0.1MF
C738	1-107-826-11	s	CAPACITOR,CHIP CERAMIC 0.1MF
C739	1-107-826-11	s	CAPACITOR,CHIP CERAMIC 0.1MF
C740	1-107-826-11	s	CAPACITOR,CHIP CERAMIC 0.1MF
C741	1-107-826-11	s	CAPACITOR,CHIP CERAMIC 0.1MF
C742	1-107-826-11	s	CAPACITOR,CHIP CERAMIC 0.1MF
C743	1-107-826-11	s	CAPACITOR,CHIP CERAMIC 0.1MF
C744	1-107-826-11	s	CAPACITOR,CHIP CERAMIC 0.1MF
C745	1-107-826-11	s	CAPACITOR,CHIP CERAMIC 0.1MF
C746	1-107-826-11	s	CAPACITOR,CHIP CERAMIC 0.1MF
C747	1-107-826-11	s	CAPACITOR,CHIP CERAMIC 0.1MF
C748	1-107-826-11	s	CAPACITOR,CHIP CERAMIC 0.1MF
C749	*2 1-165-870-21	s	CAPACITOR, ELECT 100MF(6.3X6)
	*1 1-127-708-11	s	CAP, POLYPYRROLE 100MF
C750	*2 deleted		
	*1 1-131-603-11	s	CAP, POLYPYRROLE 100MF
C751	1-107-826-11	s	CAPACITOR,CHIP CERAMIC 0.1MF
C752	1-107-826-11	s	CAPACITOR,CHIP CERAMIC 0.1MF
C753	1-107-826-11	s	CAPACITOR,CHIP CERAMIC 0.1MF
C754	1-107-826-11	s	CAPACITOR,CHIP CERAMIC 0.1MF
C755	1-107-826-11	s	CAPACITOR,CHIP CERAMIC 0.1MF
C756	1-107-826-11	s	CAPACITOR,CHIP CERAMIC 0.1MF
C757	1-107-826-11	s	CAPACITOR,CHIP CERAMIC 0.1MF
C758	1-107-826-11	s	CAPACITOR,CHIP CERAMIC 0.1MF
C759	1-107-826-11	s	CAPACITOR,CHIP CERAMIC 0.1MF
C760	1-107-826-11	s	CAPACITOR,CHIP CERAMIC 0.1MF
C761	1-107-826-11	s	CAPACITOR,CHIP CERAMIC 0.1MF
C762	1-107-826-11	s	CAPACITOR,CHIP CERAMIC 0.1MF
C763	1-127-692-11	s	CAP, CHIP CERAMIC 10MF B 3216
C764	1-127-692-11	s	CAP, CHIP CERAMIC 10MF B 3216
C765	*2 1-127-692-11	s	CAP, CHIP CERAMIC 10MF B 3216
C766	*2 1-127-692-11	s	CAP, CHIP CERAMIC 10MF B 3216
C767	*2 1-127-692-11	s	CAP, CHIP CERAMIC 10MF B 3216
C768	*2 1-127-692-11	s	CAP, CHIP CERAMIC 10MF B 3216
C769	*2 1-127-692-11	s	CAP, CHIP CERAMIC 10MF B 3216
C803	1-162-970-11	s	CAPACITOR CERAMIC 0.01MF/25V B
C804	1-162-970-11	s	CAPACITOR CERAMIC 0.01MF/25V B

(HPR-1 BOARD for HDW RECORDER)

Ref. No. or Q'ty	Part No.	SP	Description
C805	1-162-970-11	s	CAPACITOR CERAMIC 0.01MF/25V B
C806	1-162-970-11	s	CAPACITOR CERAMIC 0.01MF/25V B
C807	1-162-970-11	s	CAPACITOR CERAMIC 0.01MF/25V B
C808	1-162-970-11	s	CAPACITOR CERAMIC 0.01MF/25V B
C809	1-162-970-11	s	CAPACITOR CERAMIC 0.01MF/25V B
C810	1-162-970-11	s	CAPACITOR CERAMIC 0.01MF/25V B
C811	1-162-970-11	s	CAPACITOR CERAMIC 0.01MF/25V B
C812	1-162-970-11	s	CAPACITOR CERAMIC 0.01MF/25V B
C813	1-162-970-11	s	CAPACITOR CERAMIC 0.01MF/25V B
C814	1-162-970-11	s	CAPACITOR CERAMIC 0.01MF/25V B
C815	1-162-970-11	s	CAPACITOR CERAMIC 0.01MF/25V B
C816	1-162-970-11	s	CAPACITOR CERAMIC 0.01MF/25V B
C817	1-162-970-11	s	CAPACITOR CERAMIC 0.01MF/25V B
C818	1-162-970-11	s	CAPACITOR CERAMIC 0.01MF/25V B
C819	1-162-970-11	s	CAPACITOR CERAMIC 0.01MF/25V B
C820	1-162-970-11	s	CAPACITOR CERAMIC 0.01MF/25V B
C821	1-162-970-11	s	CAPACITOR CERAMIC 0.01MF/25V B
C822	1-162-970-11	s	CAPACITOR CERAMIC 0.01MF/25V B
C823	1-162-970-11	s	CAPACITOR CERAMIC 0.01MF/25V B
C824	1-162-970-11	s	CAPACITOR CERAMIC 0.01MF/25V B
C829	1-107-826-11	s	CAPACITOR,CHIP CERAMIC 0.1MF
C832	1-107-826-11	s	CAPACITOR,CHIP CERAMIC 0.1MF
C835	1-107-826-11	s	CAPACITOR,CHIP CERAMIC 0.1MF
C836	1-107-826-11	s	CAPACITOR,CHIP CERAMIC 0.1MF
C837	1-107-826-11	s	CAPACITOR,CHIP CERAMIC 0.1MF
C850	*2 deleted		
	*1 1-127-708-11	s	CAP, POLYPYRROLE 100MF
C851	1-162-970-11	s	CAPACITOR CERAMIC 0.01MF/25V B
C852	1-162-970-11	s	CAPACITOR CERAMIC 0.01MF/25V B
C853	1-162-970-11	s	CAPACITOR CERAMIC 0.01MF/25V B
C854	1-162-970-11	s	CAPACITOR CERAMIC 0.01MF/25V B
C855	1-162-970-11	s	CAPACITOR CERAMIC 0.01MF/25V B
C856	1-162-970-11	s	CAPACITOR CERAMIC 0.01MF/25V B
C857	1-162-970-11	s	CAPACITOR CERAMIC 0.01MF/25V B
C858	1-162-970-11	s	CAPACITOR CERAMIC 0.01MF/25V B
C859	1-162-970-11	s	CAPACITOR CERAMIC 0.01MF/25V B
C860	*2 deleted		
	*1 1-131-603-11	s	CAP, POLYPYRROLE 100MF
C861	1-107-826-11	s	CAPACITOR,CHIP CERAMIC 0.1MF
C870	*2 1-127-692-11	s	CAP, CHIP CERAMIC 10MF B 3216
C871	*2 1-127-692-11	s	CAP, CHIP CERAMIC 10MF B 3216
C872	*2 1-127-692-11	s	CAP, CHIP CERAMIC 10MF B 3216
C873	*2 1-127-692-11	s	CAP, CHIP CERAMIC 10MF B 3216
C874	*2 1-127-692-11	s	CAP, CHIP CERAMIC 10MF B 3216
C875	*2 1-127-692-11	s	CAP, CHIP CERAMIC 10MF B 3216
C904	1-107-826-11	s	CAPACITOR,CHIP CERAMIC 0.1MF
C905	1-107-826-11	s	CAPACITOR,CHIP CERAMIC 0.1MF
C906	1-107-826-11	s	CAPACITOR,CHIP CERAMIC 0.1MF
C907	1-107-826-11	s	CAPACITOR,CHIP CERAMIC 0.1MF
C908	1-107-826-11	s	CAPACITOR,CHIP CERAMIC 0.1MF
C909	1-107-826-11	s	CAPACITOR,CHIP CERAMIC 0.1MF
C910	*2 1-127-692-11	s	CAP, CHIP CERAMIC 10MF B 3216
	*1 1-162-970-11	s	CAPACITOR CERAMIC 0.01MF/25V B
C911	1-107-826-11	s	CAPACITOR,CHIP CERAMIC 0.1MF
C912	1-107-826-11	s	CAPACITOR,CHIP CERAMIC 0.1MF
C913	1-107-826-11	s	CAPACITOR,CHIP CERAMIC 0.1MF
C914	1-107-826-11	s	CAPACITOR,CHIP CERAMIC 0.1MF
C915	1-107-826-11	s	CAPACITOR,CHIP CERAMIC 0.1MF
C918	1-107-826-11	s	CAPACITOR,CHIP CERAMIC 0.1MF

(HPR-1 BOARD for HDW RECORDER)

Ref. No. or Q'ty	Part No.	SP	Description
C919	1-107-826-11	s	CAPACITOR,CHIP CERAMIC 0.1MF
C921	*2 1-127-692-11	s	CAP, CHIP CERAMIC 10MF B 3216
C923	1-107-826-11	s	CAPACITOR,CHIP CERAMIC 0.1MF
C924	1-107-826-11	s	CAPACITOR,CHIP CERAMIC 0.1MF
C925	1-107-826-11	s	CAPACITOR,CHIP CERAMIC 0.1MF
C926	1-107-826-11	s	CAPACITOR,CHIP CERAMIC 0.1MF
C927	*2 deleted		
	*1 1-107-826-11	s	CAPACITOR,CHIP CERAMIC 0.1MF
C928	*2 deleted		
	*1 1-107-826-11	s	CAPACITOR,CHIP CERAMIC 0.1MF
C929	1-107-826-11	s	CAPACITOR,CHIP CERAMIC 0.1MF
C930	1-107-826-11	s	CAPACITOR,CHIP CERAMIC 0.1MF
C931	1-107-826-11	s	CAPACITOR,CHIP CERAMIC 0.1MF
C932	1-107-826-11	s	CAPACITOR,CHIP CERAMIC 0.1MF
C933	1-107-826-11	s	CAPACITOR,CHIP CERAMIC 0.1MF
C934	*2 1-107-826-11	s	CAPACITOR,CHIP CERAMIC 0.1MF
C1000	1-107-826-11	s	CAPACITOR,CHIP CERAMIC 0.1MF
C1001	1-107-826-11	s	CAPACITOR,CHIP CERAMIC 0.1MF
C1002	1-107-826-11	s	CAPACITOR,CHIP CERAMIC 0.1MF
C1005	1-107-826-11	s	CAPACITOR,CHIP CERAMIC 0.1MF
C1006	1-107-826-11	s	CAPACITOR,CHIP CERAMIC 0.1MF
C1007	1-107-826-11	s	CAPACITOR,CHIP CERAMIC 0.1MF
C1008	1-107-826-11	s	CAPACITOR,CHIP CERAMIC 0.1MF
C1009	1-107-826-11	s	CAPACITOR,CHIP CERAMIC 0.1MF
C1010	1-107-826-11	s	CAPACITOR,CHIP CERAMIC 0.1MF
C1011	1-107-826-11	s	CAPACITOR,CHIP CERAMIC 0.1MF
C1012	1-107-826-11	s	CAPACITOR,CHIP CERAMIC 0.1MF
C1013	1-127-692-11	s	CAP, CHIP CERAMIC 10MF B 3216
C1014	1-127-692-11	s	CAP, CHIP CERAMIC 10MF B 3216
C1015	1-107-826-11	s	CAPACITOR,CHIP CERAMIC 0.1MF
C1016	*2 1-127-692-11	s	CAP, CHIP CERAMIC 10MF B 3216
C1017	1-107-826-11	s	CAPACITOR,CHIP CERAMIC 0.1MF
C1019	1-107-826-11	s	CAPACITOR,CHIP CERAMIC 0.1MF
C1020	1-107-826-11	s	CAPACITOR,CHIP CERAMIC 0.1MF
C1021	1-107-826-11	s	CAPACITOR,CHIP CERAMIC 0.1MF
C1022	1-107-826-11	s	CAPACITOR,CHIP CERAMIC 0.1MF
C1023	1-127-692-11	s	CAP, CHIP CERAMIC 10MF B 3216
C1024	*2 1-127-692-11	s	CAP, CHIP CERAMIC 10MF B 3216
C1025	*2 1-165-870-21	s	CAPACITOR, ELECT 100MF(6.3X6)
	*1 1-131-603-11	s	CAP, POLYPYRROLE 100MF
C1026	*2 1-135-342-11	s	CAPACITOR,SOLID ELECT 56MF
	*1 1-131-603-11	s	CAP, POLYPYRROLE 100MF
C1029	1-107-826-11	s	CAPACITOR,CHIP CERAMIC 0.1MF
C1030	1-131-661-11	s	CAPACITOR,ELECT 100MF/10V CHIP
C1031	1-131-661-11	s	CAPACITOR,ELECT 100MF/10V CHIP
C1033	1-162-970-11	s	CAPACITOR CERAMIC 0.01MF/25V B
C1034	1-107-826-11	s	CAPACITOR,CHIP CERAMIC 0.1MF
C1035	1-107-826-11	s	CAPACITOR,CHIP CERAMIC 0.1MF
C1036	1-107-826-11	s	CAPACITOR,CHIP CERAMIC 0.1MF
C1037	*2 1-165-870-21	s	CAPACITOR, ELECT 100MF(6.3X6)
	*1 1-131-661-11	s	CAPACITOR,ELECT 100MF/10V CHIP
C1038	1-107-826-11	s	CAPACITOR,CHIP CERAMIC 0.1MF
C1039	1-107-826-11	s	CAPACITOR,CHIP CERAMIC 0.1MF
C1040	1-115-416-11	s	CAPACITOR,CERAMIC 1000PF/25V
C1041	1-131-661-11	s	CAPACITOR,ELECT 100MF/10V CHIP
C1042	1-107-826-11	s	CAPACITOR,CHIP CERAMIC 0.1MF
C1043	1-107-826-11	s	CAPACITOR,CHIP CERAMIC 0.1MF
C1044	1-107-826-11	s	CAPACITOR,CHIP CERAMIC 0.1MF
C1045	*2 deleted		
	*1 1-131-661-11	s	CAPACITOR,ELECT 100MF/10V CHIP

(HPR-1 BOARD for HDW RECORDER)

Ref. No. or Q'ty	Part No.	SP	Description
C1046	1-107-826-11	s	CAPACITOR,CHIP CERAMIC 0.1MF
C1047	1-107-826-11	s	CAPACITOR,CHIP CERAMIC 0.1MF
C1048	1-107-826-11	s	CAPACITOR,CHIP CERAMIC 0.1MF
C1049	1-125-889-11	s	CAPACITOR, CERAMIC 2.2MF
C1050	1-115-416-11	s	CAPACITOR,CERAMIC 1000PF/25V
C1051	1-162-970-11	s	CAPACITOR CERAMIC 0.01MF/25V B
C1053 *2	1-135-342-11	s	CAPACITOR,SOLID ELECT 56MF
*1	1-131-603-11	s	CAP, POLYPYRROLE 100MF
C1054 *2	1-165-870-21	s	CAPACITOR, ELECT 100MF(6.3X6)
*1	1-131-603-11	s	CAP, POLYPYRROLE 100MF
C1055 *2	1-165-870-21	s	CAPACITOR, ELECT 100MF(6.3X6)
*1	1-131-661-11	s	CAPACITOR,ELECT 100MF/10V CHIP
C1056 *2	1-125-889-11	s	CAPACITOR, CERAMIC 2.2MF
*1	1-125-889-11	s	CAPACITOR, C.CERAMIC 2.2MF
C1059	1-107-826-11	s	CAPACITOR,CHIP CERAMIC 0.1MF
C1060	1-107-826-11	s	CAPACITOR,CHIP CERAMIC 0.1MF
C1061	1-107-826-11	s	CAPACITOR,CHIP CERAMIC 0.1MF
C1200	1-162-970-11	s	CAPACITOR CERAMIC 0.01MF/25V B
C1201	1-162-970-11	s	CAPACITOR CERAMIC 0.01MF/25V B
C1202	1-162-970-11	s	CAPACITOR CERAMIC 0.01MF/25V B
C1203	1-162-970-11	s	CAPACITOR CERAMIC 0.01MF/25V B
C1204	1-162-970-11	s	CAPACITOR CERAMIC 0.01MF/25V B
C1205	1-162-970-11	s	CAPACITOR CERAMIC 0.01MF/25V B
C1206 *2	deleted		
*1	1-131-603-11	s	CAP, POLYPYRROLE 100MF
C1207 *2	1-127-692-11	s	CAP, CHIP CERAMIC 10MF B 3216
*1	1-162-970-11	s	CAPACITOR CERAMIC 0.01MF/25V B
C1208 *2	1-127-692-11	s	CAP, CHIP CERAMIC 10MF B 3216
*1	1-162-970-11	s	CAPACITOR CERAMIC 0.01MF/25V B
C1209	1-162-970-11	s	CAPACITOR CERAMIC 0.01MF/25V B
C1210	1-162-970-11	s	CAPACITOR CERAMIC 0.01MF/25V B
C1211	1-162-970-11	s	CAPACITOR CERAMIC 0.01MF/25V B
C1212	1-162-970-11	s	CAPACITOR CERAMIC 0.01MF/25V B
C1213	1-162-970-11	s	CAPACITOR CERAMIC 0.01MF/25V B
C1214	1-162-970-11	s	CAPACITOR CERAMIC 0.01MF/25V B
C1215	1-162-970-11	s	CAPACITOR CERAMIC 0.01MF/25V B
C1216	1-162-970-11	s	CAPACITOR CERAMIC 0.01MF/25V B
C1217	1-162-970-11	s	CAPACITOR CERAMIC 0.01MF/25V B
C1218	1-162-970-11	s	CAPACITOR CERAMIC 0.01MF/25V B
C1219	1-162-970-11	s	CAPACITOR CERAMIC 0.01MF/25V B
C1220 *2	deleted		
*1	1-131-603-11	s	CAP, POLYPYRROLE 100MF
C1221	1-107-826-11	s	CAPACITOR,CHIP CERAMIC 0.1MF
C1222 *2	1-127-692-11	s	CAP, CHIP CERAMIC 10MF B 3216
C1223 *2	1-127-692-11	s	CAP, CHIP CERAMIC 10MF B 3216
C1224 *2	1-127-692-11	s	CAP, CHIP CERAMIC 10MF B 3216
C1225 *2	1-127-692-11	s	CAP, CHIP CERAMIC 10MF B 3216
C1226 *2	1-127-692-11	s	CAP, CHIP CERAMIC 10MF B 3216
C1227 *2	1-127-692-11	s	CAP, CHIP CERAMIC 10MF B 3216
C1228 *2	1-127-692-11	s	CAP, CHIP CERAMIC 10MF B 3216
C1229 *2	1-127-692-11	s	CAP, CHIP CERAMIC 10MF B 3216
C1230 *2	1-127-692-11	s	CAP, CHIP CERAMIC 10MF B 3216
C1232 *2	1-162-970-11	s	CAPACITOR CERAMIC 0.01MF/25V B
C1233 *2	1-162-970-11	s	CAPACITOR CERAMIC 0.01MF/25V B
C1234 *2	1-162-970-11	s	CAPACITOR CERAMIC 0.01MF/25V B
C1235 *2	1-162-970-11	s	CAPACITOR CERAMIC 0.01MF/25V B
C1236 *2	1-162-970-11	s	CAPACITOR CERAMIC 0.01MF/25V B
C1237 *2	1-162-970-11	s	CAPACITOR CERAMIC 0.01MF/25V B
C1238 *2	1-162-970-11	s	CAPACITOR CERAMIC 0.01MF/25V B
C1239 *2	1-162-970-11	s	CAPACITOR CERAMIC 0.01MF/25V B

(HPR-1 BOARD for HDW RECORDER)

Ref. No. or Q'ty	Part No.	SP	Description
C1240 *2	1-162-970-11	s	CAPACITOR CERAMIC 0.01MF/25V B
C1241 *2	1-162-970-11	s	CAPACITOR CERAMIC 0.01MF/25V B
C1242 *2	1-162-970-11	s	CAPACITOR CERAMIC 0.01MF/25V B
C1243 *2	1-162-970-11	s	CAPACITOR CERAMIC 0.01MF/25V B
C1244 *2	1-162-970-11	s	CAPACITOR CERAMIC 0.01MF/25V B
C1245 *2	1-162-970-11	s	CAPACITOR CERAMIC 0.01MF/25V B
C1246 *2	1-162-970-11	s	CAPACITOR CERAMIC 0.01MF/25V B
C1247 *2	1-162-970-11	s	CAPACITOR CERAMIC 0.01MF/25V B
C1248 *2	1-162-970-11	s	CAPACITOR CERAMIC 0.01MF/25V B
C1249 *2	1-162-970-11	s	CAPACITOR CERAMIC 0.01MF/25V B
C1250 *2	1-162-970-11	s	CAPACITOR CERAMIC 0.01MF/25V B
C1251 *2	1-162-970-11	s	CAPACITOR CERAMIC 0.01MF/25V B
C1252 *2	1-162-970-11	s	CAPACITOR CERAMIC 0.01MF/25V B
C1253 *2	1-162-970-11	s	CAPACITOR CERAMIC 0.01MF/25V B
C1254 *2	1-162-970-11	s	CAPACITOR CERAMIC 0.01MF/25V B
C1255 *2	1-162-970-11	s	CAPACITOR CERAMIC 0.01MF/25V B
C1256 *2	1-162-970-11	s	CAPACITOR CERAMIC 0.01MF/25V B
C1257 *2	1-162-970-11	s	CAPACITOR CERAMIC 0.01MF/25V B
C1258 *2	1-162-970-11	s	CAPACITOR CERAMIC 0.01MF/25V B
C1259 *2	1-162-970-11	s	CAPACITOR CERAMIC 0.01MF/25V B
C1260 *2	1-162-970-11	s	CAPACITOR CERAMIC 0.01MF/25V B
C1261 *2	1-162-970-11	s	CAPACITOR CERAMIC 0.01MF/25V B
C1262 *2	1-162-970-11	s	CAPACITOR CERAMIC 0.01MF/25V B
C1263 *2	1-162-970-11	s	CAPACITOR CERAMIC 0.01MF/25V B
C1264 *2	1-127-692-11	s	CAP, CHIP CERAMIC 10MF B 3216
C1265 *2	1-127-692-11	s	CAP, CHIP CERAMIC 10MF B 3216
C1266 *2	1-127-692-11	s	CAP, CHIP CERAMIC 10MF B 3216
C1267 *2	1-127-692-11	s	CAP, CHIP CERAMIC 10MF B 3216
C1268 *2	1-127-692-11	s	CAP, CHIP CERAMIC 10MF B 3216
C1269 *2	1-127-692-11	s	CAP, CHIP CERAMIC 10MF B 3216
C1270 *2	1-127-692-11	s	CAP, CHIP CERAMIC 10MF B 3216
C1272 *2	1-107-826-11	s	CAPACITOR,CHIP CERAMIC 0.1MF
C1273 *2	1-107-826-11	s	CAPACITOR,CHIP CERAMIC 0.1MF
C1274 *2	1-107-826-11	s	CAPACITOR,CHIP CERAMIC 0.1MF
C1275 *2	1-107-826-11	s	CAPACITOR,CHIP CERAMIC 0.1MF
C1276 *2	1-107-826-11	s	CAPACITOR,CHIP CERAMIC 0.1MF
C1277 *2	1-107-826-11	s	CAPACITOR,CHIP CERAMIC 0.1MF
C1600	1-162-970-11	s	CAPACITOR CERAMIC 0.01MF/25V B
C1601	1-162-970-11	s	CAPACITOR CERAMIC 0.01MF/25V B
C1602 *2	deleted		
*1	1-131-603-11	s	CAP, POLYPYRROLE 100MF
C1603	1-162-970-11	s	CAPACITOR CERAMIC 0.01MF/25V B
C1604	1-162-970-11	s	CAPACITOR CERAMIC 0.01MF/25V B
C1605	1-162-970-11	s	CAPACITOR CERAMIC 0.01MF/25V B
C1606	1-162-970-11	s	CAPACITOR CERAMIC 0.01MF/25V B
C1607	1-162-970-11	s	CAPACITOR CERAMIC 0.01MF/25V B
C1608	1-162-970-11	s	CAPACITOR CERAMIC 0.01MF/25V B
C1609	1-162-970-11	s	CAPACITOR CERAMIC 0.01MF/25V B
C1610	1-162-970-11	s	CAPACITOR CERAMIC 0.01MF/25V B
C1611	1-162-970-11	s	CAPACITOR CERAMIC 0.01MF/25V B
C1612	1-162-970-11	s	CAPACITOR CERAMIC 0.01MF/25V B
C1613	1-162-970-11	s	CAPACITOR CERAMIC 0.01MF/25V B
C1614	1-162-970-11	s	CAPACITOR CERAMIC 0.01MF/25V B
C1615 *2	1-127-692-11	s	CAP, CHIP CERAMIC 10MF B 3216
*1	1-131-603-11	s	CAP, POLYPYRROLE 100MF
C1616 *2	1-127-692-11	s	CAP, CHIP CERAMIC 10MF B 3216
C1617 *2	1-127-692-11	s	CAP, CHIP CERAMIC 10MF B 3216
C1618 *2	1-127-692-11	s	CAP, CHIP CERAMIC 10MF B 3216
C1619 *2	1-127-692-11	s	CAP, CHIP CERAMIC 10MF B 3216

(HPR-1 BOARD for HDW RECORDER)

Ref. No. or Q'ty	Part No.	SP	Description	
C1620 *2	1-127-692-11	s	CAP, CHIP CERAMIC 10MF B 3216	
C1621 *2	1-127-692-11	s	CAP, CHIP CERAMIC 10MF B 3216	
C1622 *2	1-127-692-11	s	CAP, CHIP CERAMIC 10MF B 3216	
C1623 *2	1-127-692-11	s	CAP, CHIP CERAMIC 10MF B 3216	
C1624 *2	1-127-692-11	s	CAP, CHIP CERAMIC 10MF B 3216	
C1625 *2	1-127-692-11	s	CAP, CHIP CERAMIC 10MF B 3216	
C1626 *2	1-127-692-11	s	CAP, CHIP CERAMIC 10MF B 3216	
C1627 *2	1-127-692-11	s	CAP, CHIP CERAMIC 10MF B 3216	
C1628 *2	1-127-692-11	s	CAP, CHIP CERAMIC 10MF B 3216	
C1629 *2	1-127-692-11	s	CAP, CHIP CERAMIC 10MF B 3216	
C1630 *2	1-127-692-11	s	CAP, CHIP CERAMIC 10MF B 3216	
C1631 *2	1-127-692-11	s	CAP, CHIP CERAMIC 10MF B 3216	
CN900 *2	1-764-093-21	o	PIN, CONNECTOR (PC BOARD) 8P	
*1	1-580-756-21	o	PIN, CONNECTOR 7P	
D1000	8-719-066-98	s	DIODE RB051L-40	
D1001	8-719-938-75	s	DIODE SB05-05CP	(RECTI)
D1002	8-719-938-75	s	DIODE SB05-05CP	(RECTI)
D1003	8-719-066-98	s	DIODE RB051L-40	
E1000 *2	1-535-877-22	s	CHIP,CHECKER (TEST POINT)	
E1001 *2	1-535-877-22	s	CHIP,CHECKER (TEST POINT)	
E1002 *2	1-535-877-22	s	CHIP,CHECKER (TEST POINT)	
E1003 *2	1-535-877-22	s	CHIP,CHECKER (TEST POINT)	
E1004 *2	1-535-877-22	s	CHIP,CHECKER (TEST POINT)	
E1005 *2	1-535-877-22	s	CHIP,CHECKER (TEST POINT)	
E1006 *2	1-535-877-22	s	CHIP,CHECKER (TEST POINT)	
E1007 *2	1-535-877-22	s	CHIP,CHECKER (TEST POINT)	
F1000 ⚠	1-576-270-11	s	FUSE CHIP 4A/125V (6125)	
F1001 ⚠	1-576-270-11	s	FUSE CHIP 4A/125V (6125)	
F1002 ⚠	1-576-270-11	s	FUSE CHIP 4A/125V (6125)	
FB1000	1-414-864-11	s	INDUCTOR, MICRO (CHIP TYPE)	
FB1001	1-414-864-11	s	INDUCTOR, MICRO (CHIP TYPE)	
FB1002	1-414-864-11	s	INDUCTOR, MICRO (CHIP TYPE)	
IC100	8-759-712-31	s	IC SN65LVDT388DBTR	
IC101	8-759-712-31	s	IC SN65LVDT388DBTR	
IC102	8-759-712-31	s	IC SN65LVDT388DBTR	
IC103 *2	8-759-392-77	s	IC SN74LVC245APW	(E20)
IC104 *2	8-759-392-77	s	IC SN74LVC245APW	(E20)
IC107	6-700-804-01	s	IC SN74LVC574APWR	
IC108	6-700-804-01	s	IC SN74LVC574APWR	
IC109	6-700-804-01	s	IC SN74LVC574APWR	
IC110	8-759-639-86	s	IC SN65LVDS32DR	
IC111	8-759-585-55	s	IC SN74LVC540APWR	
IC113	6-700-804-01	s	IC SN74LVC574APWR	
IC114	6-700-804-01	s	IC SN74LVC574APWR	
IC116	6-700-804-01	s	IC SN74LVC574APWR	
IC201 *2	6-705-983-01	s	IC IS42S32200B-6TL-TR	
*1	6-702-238-11	s	IC HY57V643220CT-7TR	
IC203	6-700-804-01	s	IC SN74LVC574APWR	
IC205 *2	6-705-983-01	s	IC IS42S32200B-6TL-TR	
*1	6-702-238-11	s	IC HY57V643220CT-7TR	
IC207	6-700-804-01	s	IC SN74LVC574APWR	
IC208	8-759-651-59	s	IC SN74CBTLV3245APWR	
IC209	8-759-651-59	s	IC SN74CBTLV3245APWR	
IC210	8-759-651-59	s	IC SN74CBTLV3245APWR	
IC211	6-700-804-01	s	IC SN74LVC574APWR	
IC302	8-759-669-41	s	IC SN74LVC125APWR-12	
IC304	8-759-549-15	s	IC SN74LV245APWR	

(HPR-1 BOARD for HDW RECORDER)

Ref. No. or Q'ty	Part No.	SP	Description	
IC305 *2	deleted			
*1	8-759-713-04	s	IC CXD9148GG	
IC306	8-759-472-18	s	IC 74VHC138MTCX	
IC400 *2	deleted			
*1	8-759-661-00	s	IC ISPLSI2192VE-100LT128	
IC500	8-759-712-31	s	IC SN65LVDT388DBTR	
IC501	8-759-712-31	s	IC SN65LVDT388DBTR	
IC502	8-759-712-31	s	IC SN65LVDT388DBTR	
IC503	8-759-592-47	s	IC TC7SZ08FU(TE85R)	
IC506	8-759-392-77	s	IC SN74LVC245APW	(E20)
IC507	8-759-392-77	s	IC SN74LVC245APW	(E20)
IC508	6-700-804-01	s	IC SN74LVC574APWR	
IC509	6-700-804-01	s	IC SN74LVC574APWR	
IC510	6-700-804-01	s	IC SN74LVC574APWR	
IC511 *2	8-759-549-15	s	IC SN74LV245APWR	
*1	8-759-392-77	s	IC SN74LVC245APW	(E20)
IC512	8-759-392-77	s	IC SN74LVC245APW	(E20)
IC513	6-700-804-01	s	IC SN74LVC574APWR	
IC514 *2	8-759-549-15	s	IC SN74LV245APWR	
*1	8-759-392-77	s	IC SN74LVC245APW	(E20)
IC515	8-759-392-77	s	IC SN74LVC245APW	(E20)
IC516	6-700-804-01	s	IC SN74LVC574APWR	
IC517	6-700-804-01	s	IC SN74LVC574APWR	
IC518 *2	8-759-549-15	s	IC SN74LV245APWR	
IC601 *2	6-705-983-01	s	IC IS42S32200B-6TL-TR	
*1	6-702-238-11	s	IC HY57V643220CT-7TR	
IC602 *2	6-705-983-01	s	IC IS42S32200B-6TL-TR	
*1	6-702-238-11	s	IC HY57V643220CT-7TR	
IC707	6-702-238-11	s	IC HY57V643220CT-7TR	
IC709	6-700-804-01	s	IC SN74LVC574APWR	
IC711 *2	6-704-174-01	s	IC MS81V04160A-25TBZ03J	
*1	6-700-805-01	s	IC MS81V04160-25TB	
IC712 *2	6-704-174-01	s	IC MS81V04160A-25TBZ03J	
*1	6-700-805-01	s	IC MS81V04160-25TB	
IC713	8-759-549-15	s	IC SN74LV245APWR	
IC714	8-759-549-15	s	IC SN74LV245APWR	
IC715	8-759-549-15	s	IC SN74LV245APWR	
IC716	8-759-549-15	s	IC SN74LV245APWR	
IC717	8-759-549-15	s	IC SN74LV245APWR	
IC718	6-700-804-01	s	IC SN74LVC574APWR	
IC719	6-700-804-01	s	IC SN74LVC574APWR	
IC720	6-700-804-01	s	IC SN74LVC574APWR	
IC721	6-700-804-01	s	IC SN74LVC574APWR	
IC722	6-700-804-01	s	IC SN74LVC574APWR	
IC723	6-700-804-01	s	IC SN74LVC574APWR	
IC803	6-700-804-01	s	IC SN74LVC574APWR	
IC805	6-700-804-01	s	IC SN74LVC574APWR	
IC808	8-759-712-32	s	IC SN65LVDS389DBTR	
IC809	8-759-712-32	s	IC SN65LVDS389DBTR	
IC810	8-759-712-32	s	IC SN65LVDS389DBTR	
IC811	6-700-804-01	s	IC SN74LVC574APWR	
IC900	8-759-549-15	s	IC SN74LV245APWR	
IC901	8-759-549-15	s	IC SN74LV245APWR	
IC902	8-759-549-15	s	IC SN74LV245APWR	
IC903	8-759-549-15	s	IC SN74LV245APWR	
IC904	8-759-549-15	s	IC SN74LV245APWR	
IC905	8-759-549-15	s	IC SN74LV245APWR	
IC906	8-759-549-15	s	IC SN74LV245APWR	
IC907 *2	deleted			
*1	8-759-661-00	s	IC ISPLSI2192VE-100LT128	

(HPR-1 BOARD for HDW RECORDER)

Ref. No. or Q'ty	Part No.	SP	Description
IC908	8-759-549-15	s	IC SN74LV245APWR
IC911	8-759-549-15	s	IC SN74LV245APWR
IC912 *2	8-759-497-44	s	IC TC7WH125FU(TE12R)
*1	8-759-327-60	s	IC TC7W125FU-TE12R
IC913	8-759-549-15	s	IC SN74LV245APWR
IC915	8-759-549-15	s	IC SN74LV245APWR
IC916	8-759-471-85	s	IC 74VHC00MTCX
IC919 *2	6-706-487-01	s	IC TC7SH08FU(T5RSOYJF)
*1	8-759-196-96	s	IC TC7SH08FU (TE85R)
IC920 *2	deleted		
*1	8-759-549-15	s	IC SN74LV245APWR
IC921 *2	deleted		
*1	8-759-549-15	s	IC SN74LV245APWR
IC922 *2	6-706-484-01	s	IC TC7SH04FU(T5RSOYJF)
*1	8-759-271-86	s	IC TC7SH04FU
IC923	8-759-549-15	s	IC SN74LV245APWR
IC1000	8-759-639-86	s	IC SN65LVDS32DR
IC1001	8-759-392-77	s	IC SN74LVC245APW (E20)
IC1002	8-759-392-77	s	IC SN74LVC245APW (E20)
IC1003	8-759-598-13	s	IC CDC2510CPWR
IC1004	8-759-598-13	s	IC CDC2510CPWR
IC1005	8-759-540-36	s	IC SN74LVC157APWR
IC1006	8-759-540-36	s	IC SN74LVC157APWR
IC1008*2	8-759-642-22	s	IC UPC29M05T-E2
*1	8-759-533-85	s	IC L88M05T-FA-TL
IC1009	8-759-597-57	s	IC LTC1628CG#TR
IC1010	8-759-598-13	s	IC CDC2510CPWR
IC1013	8-759-549-15	s	IC SN74LV245APWR
IC1014	8-759-549-15	s	IC SN74LV245APWR
IC1015	8-759-639-85	s	IC SN65LVDS31DR
IC1016*2	8-759-669-41	s	IC SN74LVC125APWR-12
L1000	1-414-441-11	s	INDUCTOR (POWER) 15UH
L1001 *2	1-419-630-11	s	COIL, CHOKE 4.7UH
*1	1-406-864-21	s	COIL,CHOKE 4.7UH
L1003 *2	1-419-630-11	s	COIL, CHOKE 4.7UH
*1	1-406-864-21	s	COIL,CHOKE 4.7UH
L1005 *2	1-419-630-11	s	COIL, CHOKE 4.7UH
*1	1-406-864-21	s	COIL,CHOKE 4.7UH
L1006 *2	1-419-630-11	s	COIL, CHOKE 4.7UH
*1	1-406-864-21	s	COIL,CHOKE 4.7UH
L1007 *2	1-419-630-11	s	COIL, CHOKE 4.7UH
*1	1-406-864-21	s	COIL,CHOKE 4.7UH
L1008	1-414-441-11	s	INDUCTOR (POWER) 15UH
L1009 *2	1-419-630-11	s	COIL, CHOKE 4.7UH
*1	1-406-864-21	s	COIL,CHOKE 4.7UH
Q300	8-729-928-81	s	TRANSISTOR DTC144EE
Q301	8-729-928-81	s	TRANSISTOR DTC144EE
Q302	8-729-928-81	s	TRANSISTOR DTC144EE
Q303	8-729-928-81	s	TRANSISTOR DTC144EE
Q570	8-729-928-19	s	TRANSISTOR 2SA1774R
Q571	8-729-047-32	s	TRANSISTOR SI4425DY-T1
Q1000	8-729-047-85	s	TRANSISTOR SI4416DY-T1
Q1001	8-729-047-85	s	TRANSISTOR SI4416DY-T1
Q1002	8-729-047-85	s	TRANSISTOR SI4416DY-T1
Q1003	8-729-047-85	s	TRANSISTOR SI4416DY-T1
Q1004	8-729-928-19	s	TRANSISTOR 2SA1774R
Q1005	8-729-928-19	s	TRANSISTOR 2SA1774R
Q1006	8-729-928-19	s	TRANSISTOR 2SA1774R
Q1007	8-729-928-81	s	TRANSISTOR DTC144EE
R124	1-218-823-11	s	RESISTOR,CHIP 100 1/10W (1608)

(HPR-1 BOARD for HDW RECORDER)

Ref. No. or Q'ty	Part No.	SP	Description
R125	1-218-823-11	s	RESISTOR,CHIP 100 1/10W (1608)
R130	1-211-985-11	s	RESISTOR,CHIP 47 1/10W (1608)
R137	1-211-977-11	s	RESISTOR,CHIP 22 1/10W (1608)
R138	1-218-823-11	s	RESISTOR,CHIP 100 1/10W (1608)
R139	1-218-823-11	s	RESISTOR,CHIP 100 1/10W (1608)
R164	1-218-895-11	s	RESISTOR,CHIP 100K 1/10W(1608)
R165	1-218-895-11	s	RESISTOR,CHIP 100K 1/10W(1608)
R166	1-218-895-11	s	RESISTOR,CHIP 100K 1/10W(1608)
R167	1-218-895-11	s	RESISTOR,CHIP 100K 1/10W(1608)
R178	1-211-985-11	s	RESISTOR,CHIP 47 1/10W (1608)
R179	1-211-985-11	s	RESISTOR,CHIP 47 1/10W (1608)
R180	1-211-977-11	s	RESISTOR,CHIP 22 1/10W (1608)
R181	1-211-985-11	s	RESISTOR,CHIP 47 1/10W (1608)
R200	1-216-864-11	s	CONDUCTOR, CHIP (1608)
R203	1-216-864-11	s	CONDUCTOR, CHIP (1608)
R206	1-211-977-11	s	RESISTOR,CHIP 22 1/10W (1608)
R207	1-211-977-11	s	RESISTOR,CHIP 22 1/10W (1608)
R208	1-216-864-11	s	CONDUCTOR, CHIP (1608)
R209	1-216-864-11	s	CONDUCTOR, CHIP (1608)
R210	1-216-864-11	s	CONDUCTOR, CHIP (1608)
R214 *2	deleted		
*1	1-211-977-11	s	RESISTOR,CHIP 22 1/10W (1608)
R215 *2	deleted		
*1	1-211-977-11	s	RESISTOR,CHIP 22 1/10W (1608)
R216	1-211-985-11	s	RESISTOR,CHIP 47 1/10W (1608)
R217	1-211-985-11	s	RESISTOR,CHIP 47 1/10W (1608)
R218	1-211-985-11	s	RESISTOR,CHIP 47 1/10W (1608)
R219	1-211-985-11	s	RESISTOR,CHIP 47 1/10W (1608)
R222	1-216-864-11	s	CONDUCTOR, CHIP (1608)
R224	1-216-864-11	s	CONDUCTOR, CHIP (1608)
R227 *2	deleted		
*1	1-216-864-11	s	CONDUCTOR, CHIP (1608)
R228 *2	deleted		
*1	1-216-864-11	s	CONDUCTOR, CHIP (1608)
R229	1-216-864-11	s	CONDUCTOR, CHIP (1608)
R230	1-216-864-11	s	CONDUCTOR, CHIP (1608)
R234 *2	deleted		
*1	1-216-864-11	s	CONDUCTOR, CHIP (1608)
R250	1-216-864-11	s	CONDUCTOR, CHIP (1608)
R251	1-216-864-11	s	CONDUCTOR, CHIP (1608)
R252	1-216-864-11	s	CONDUCTOR, CHIP (1608)
R254 *2	deleted		
*1	1-216-864-11	s	CONDUCTOR, CHIP (1608)
R300	1-218-835-11	s	RESISTOR,CHIP 330 1/10W (1608)
R301	1-218-823-11	s	RESISTOR,CHIP 100 1/10W (1608)
R302	1-218-835-11	s	RESISTOR,CHIP 330 1/10W (1608)
R303	1-218-887-11	s	RESISTOR,CHIP 47K 1/10W (1608)
R304	1-216-864-11	s	CONDUCTOR, CHIP (1608)
R305	1-216-864-11	s	CONDUCTOR, CHIP (1608)
R306	1-216-864-11	s	CONDUCTOR, CHIP (1608)
R307	1-216-864-11	s	CONDUCTOR, CHIP (1608)
R308	1-216-864-11	s	CONDUCTOR, CHIP (1608)
R309	1-216-864-11	s	CONDUCTOR, CHIP (1608)
R333	1-218-863-11	s	RESISTOR,CHIP 4.7K 1/10W(1608)
R334	1-218-863-11	s	RESISTOR,CHIP 4.7K 1/10W(1608)
R335	1-211-985-11	s	RESISTOR,CHIP 47 1/10W (1608)
R351	1-216-864-11	s	CONDUCTOR, CHIP (1608)
R352	1-216-864-11	s	CONDUCTOR, CHIP (1608)
R353	1-218-887-11	s	RESISTOR,CHIP 47K 1/10W (1608)
R357	1-218-863-11	s	RESISTOR,CHIP 4.7K 1/10W(1608)

(HPR-1 BOARD for HDW RECORDER)

Ref. No. or Q'ty	Part No.	SP	Description
R358	1-218-863-11	s	RESISTOR,CHIP 4.7K 1/10W(1608)
R361	1-216-864-11	s	CONDUCTOR, CHIP (1608)
R524 *2	deleted		
*1	1-216-864-11	s	CONDUCTOR, CHIP (1608)
R525 *2	1-216-864-11	s	CONDUCTOR, CHIP (1608)
R526 *2	1-218-895-11	s	RESISTOR,CHIP 100K 1/10W(1608)
R527 *2	1-218-895-11	s	RESISTOR,CHIP 100K 1/10W(1608)
R528	1-216-864-11	s	CONDUCTOR, CHIP (1608)
R529	1-216-864-11	s	CONDUCTOR, CHIP (1608)
R550	1-216-864-11	s	CONDUCTOR, CHIP (1608)
R551	1-216-864-11	s	CONDUCTOR, CHIP (1608)
R552	1-216-864-11	s	CONDUCTOR, CHIP (1608)
R553	1-216-864-11	s	CONDUCTOR, CHIP (1608)
R554	1-216-864-11	s	CONDUCTOR, CHIP (1608)
R555	1-216-864-11	s	CONDUCTOR, CHIP (1608)
R556	1-216-864-11	s	CONDUCTOR, CHIP (1608)
R557	1-216-864-11	s	CONDUCTOR, CHIP (1608)
R558	1-211-985-11	s	RESISTOR,CHIP 47 1/10W (1608)
R559	1-211-985-11	s	RESISTOR,CHIP 47 1/10W (1608)
R560	1-218-871-11	s	RESISTOR,CHIP 10K 1/10W (1608)
R561	1-218-871-11	s	RESISTOR,CHIP 10K 1/10W (1608)
R562	1-216-864-11	s	CONDUCTOR, CHIP (1608)
R570	1-218-847-11	s	RESISTOR, CHIP 1K 1/10W (1608)
R571	1-218-847-11	s	RESISTOR, CHIP 1K 1/10W (1608)
R572	1-218-835-11	s	RESISTOR,CHIP 330 1/10W (1608)
R573	1-218-835-11	s	RESISTOR,CHIP 330 1/10W (1608)
R600	1-216-864-11	s	CONDUCTOR, CHIP (1608)
R601	1-216-864-11	s	CONDUCTOR, CHIP (1608)
R602	1-216-864-11	s	CONDUCTOR, CHIP (1608)
R603	1-216-864-11	s	CONDUCTOR, CHIP (1608)
R604	1-216-864-11	s	CONDUCTOR, CHIP (1608)
R606	1-211-977-11	s	RESISTOR,CHIP 22 1/10W (1608)
R607	1-211-977-11	s	RESISTOR,CHIP 22 1/10W (1608)
R608	1-211-977-11	s	RESISTOR,CHIP 22 1/10W (1608)
R613	1-216-864-11	s	CONDUCTOR, CHIP (1608)
R616	1-211-977-11	s	RESISTOR,CHIP 22 1/10W (1608)
R617	1-211-977-11	s	RESISTOR,CHIP 22 1/10W (1608)
R618	1-211-977-11	s	RESISTOR,CHIP 22 1/10W (1608)
R620	1-216-864-11	s	CONDUCTOR, CHIP (1608)
R621	1-216-864-11	s	CONDUCTOR, CHIP (1608)
R622	1-216-864-11	s	CONDUCTOR, CHIP (1608)
R623	1-216-864-11	s	CONDUCTOR, CHIP (1608)
R624	1-216-864-11	s	CONDUCTOR, CHIP (1608)
R628	1-216-864-11	s	CONDUCTOR, CHIP (1608)
R638	1-216-864-11	s	CONDUCTOR, CHIP (1608)
R639	1-216-864-11	s	CONDUCTOR, CHIP (1608)
R640	1-216-864-11	s	CONDUCTOR, CHIP (1608)
R642	1-216-864-11	s	CONDUCTOR, CHIP (1608)
R700	1-218-873-11	s	RESISTOR,CHIP 12K 1/10W (1608)
R701	1-218-871-11	s	RESISTOR,CHIP 10K 1/10W (1608)
R702	1-218-831-11	s	RESISTOR, CHIP 220 1/10W(1608)
R703	1-218-831-11	s	RESISTOR, CHIP 220 1/10W(1608)
R704	1-211-977-11	s	RESISTOR,CHIP 22 1/10W (1608)
R707	1-211-977-11	s	RESISTOR,CHIP 22 1/10W (1608)
R710	1-218-863-11	s	RESISTOR,CHIP 4.7K 1/10W(1608)
R711	1-211-977-11	s	RESISTOR,CHIP 22 1/10W (1608)
R712	1-211-977-11	s	RESISTOR,CHIP 22 1/10W (1608)
R713	1-211-977-11	s	RESISTOR,CHIP 22 1/10W (1608)
R714	1-211-977-11	s	RESISTOR,CHIP 22 1/10W (1608)

(HPR-1 BOARD for HDW RECORDER)

Ref. No. or Q'ty	Part No.	SP	Description
R715	1-211-977-11	s	RESISTOR,CHIP 22 1/10W (1608)
R716	1-211-977-11	s	RESISTOR,CHIP 22 1/10W (1608)
R717	1-211-985-11	s	RESISTOR,CHIP 47 1/10W (1608)
R718	1-211-985-11	s	RESISTOR,CHIP 47 1/10W (1608)
R719	1-211-985-11	s	RESISTOR,CHIP 47 1/10W (1608)
R720	1-211-985-11	s	RESISTOR,CHIP 47 1/10W (1608)
R721	1-211-985-11	s	RESISTOR,CHIP 47 1/10W (1608)
R722	1-211-985-11	s	RESISTOR,CHIP 47 1/10W (1608)
R858	1-218-895-11	s	RESISTOR,CHIP 100K 1/10W(1608)
R859	1-218-895-11	s	RESISTOR,CHIP 100K 1/10W(1608)
R860	1-218-895-11	s	RESISTOR,CHIP 100K 1/10W(1608)
R861	1-218-895-11	s	RESISTOR,CHIP 100K 1/10W(1608)
R900	1-216-864-11	s	CONDUCTOR, CHIP (1608)
R901	1-218-823-11	s	RESISTOR,CHIP 100 1/10W (1608)
R902 *2	1-218-847-11	s	RESISTOR, CHIP 1K 1/10W (1608)
R903 *2	1-218-847-11	s	RESISTOR, CHIP 1K 1/10W (1608)
R904	1-216-864-11	s	CONDUCTOR, CHIP (1608)
R905 *2	1-218-847-11	s	RESISTOR, CHIP 1K 1/10W (1608)
R906	1-211-985-11	s	RESISTOR,CHIP 47 1/10W (1608)
R907	1-211-985-11	s	RESISTOR,CHIP 47 1/10W (1608)
R908	1-211-985-11	s	RESISTOR,CHIP 47 1/10W (1608)
R909	1-211-985-11	s	RESISTOR,CHIP 47 1/10W (1608)
R910	1-211-985-11	s	RESISTOR,CHIP 47 1/10W (1608)
R911	1-211-985-11	s	RESISTOR,CHIP 47 1/10W (1608)
R912	1-211-985-11	s	RESISTOR,CHIP 47 1/10W (1608)
R913	1-211-985-11	s	RESISTOR,CHIP 47 1/10W (1608)
R914	1-216-864-11	s	CONDUCTOR, CHIP (1608)
R915	1-211-985-11	s	RESISTOR,CHIP 47 1/10W (1608)
R916 *2	1-218-847-11	s	RESISTOR, CHIP 1K 1/10W (1608)
R918	1-211-985-11	s	RESISTOR,CHIP 47 1/10W (1608)
R920	1-211-985-11	s	RESISTOR,CHIP 47 1/10W (1608)
R924	1-211-985-11	s	RESISTOR,CHIP 47 1/10W (1608)
R925	1-211-985-11	s	RESISTOR,CHIP 47 1/10W (1608)
R926	1-211-985-11	s	RESISTOR,CHIP 47 1/10W (1608)
R927	1-211-985-11	s	RESISTOR,CHIP 47 1/10W (1608)
R928	1-211-985-11	s	RESISTOR,CHIP 47 1/10W (1608)
R929	1-211-985-11	s	RESISTOR,CHIP 47 1/10W (1608)
R930	1-211-985-11	s	RESISTOR,CHIP 47 1/10W (1608)
R931	1-211-985-11	s	RESISTOR,CHIP 47 1/10W (1608)
R932	1-218-863-11	s	RESISTOR,CHIP 4.7K 1/10W(1608)
R933	1-218-863-11	s	RESISTOR,CHIP 4.7K 1/10W(1608)
R934	1-218-895-11	s	RESISTOR,CHIP 100K 1/10W(1608)
R935	1-218-895-11	s	RESISTOR,CHIP 100K 1/10W(1608)
R936	1-218-895-11	s	RESISTOR,CHIP 100K 1/10W(1608)
R938	1-211-985-11	s	RESISTOR,CHIP 47 1/10W (1608)
R943	1-211-985-11	s	RESISTOR,CHIP 47 1/10W (1608)
R944	1-211-985-11	s	RESISTOR,CHIP 47 1/10W (1608)
R951	1-218-895-11	s	RESISTOR,CHIP 100K 1/10W(1608)
R952	1-218-895-11	s	RESISTOR,CHIP 100K 1/10W(1608)
R953	1-211-985-11	s	RESISTOR,CHIP 47 1/10W (1608)
R954	1-211-985-11	s	RESISTOR,CHIP 47 1/10W (1608)
R955	1-211-985-11	s	RESISTOR,CHIP 47 1/10W (1608)
R956	1-218-895-11	s	RESISTOR,CHIP 100K 1/10W(1608)
R960	1-216-864-11	s	CONDUCTOR, CHIP (1608)
R962 *2	1-216-864-11	s	CONDUCTOR, CHIP (1608)
R967 *2	deleted		
*1	1-211-985-11	s	RESISTOR,CHIP 47 1/10W (1608)
R968	1-211-985-11	s	RESISTOR,CHIP 47 1/10W (1608)
R969	1-211-985-11	s	RESISTOR,CHIP 47 1/10W (1608)

(HPR-1 BOARD for HDW RECORDER)

Ref. No. or Q'ty	Part No.	SP	Description
R970	1-211-985-11	s	RESISTOR,CHIP 47 1/10W (1608)
R971	1-211-985-11	s	RESISTOR,CHIP 47 1/10W (1608)
R972	1-211-985-11	s	RESISTOR,CHIP 47 1/10W (1608)
R973	1-211-985-11	s	RESISTOR,CHIP 47 1/10W (1608)
R974	1-211-985-11	s	RESISTOR,CHIP 47 1/10W (1608)
R975	1-211-985-11	s	RESISTOR,CHIP 47 1/10W (1608)
R976	1-211-985-11	s	RESISTOR,CHIP 47 1/10W (1608)
R977	1-211-985-11	s	RESISTOR,CHIP 47 1/10W (1608)
R978	1-211-985-11	s	RESISTOR,CHIP 47 1/10W (1608)
R980	1-211-985-11	s	RESISTOR,CHIP 47 1/10W (1608)
R981	1-211-985-11	s	RESISTOR,CHIP 47 1/10W (1608)
R982	1-211-985-11	s	RESISTOR,CHIP 47 1/10W (1608)
R983	1-211-985-11	s	RESISTOR,CHIP 47 1/10W (1608)
R984	1-211-985-11	s	RESISTOR,CHIP 47 1/10W (1608)
R985	1-211-985-11	s	RESISTOR,CHIP 47 1/10W (1608)
R986	1-211-985-11	s	RESISTOR,CHIP 47 1/10W (1608)
R987	1-218-895-11	s	RESISTOR,CHIP 100K 1/10W(1608)
R989	1-218-895-11	s	RESISTOR,CHIP 100K 1/10W(1608)
R990	1-218-895-11	s	RESISTOR,CHIP 100K 1/10W(1608)
R991	1-218-895-11	s	RESISTOR,CHIP 100K 1/10W(1608)
R992	1-216-864-11	s	CONDUCTOR, CHIP (1608)
R993	1-211-985-11	s	RESISTOR,CHIP 47 1/10W (1608)
R994	*2 deleted		
	*1 1-211-985-11	s	RESISTOR,CHIP 47 1/10W (1608)
R995	*2 deleted		
	*1 1-211-985-11	s	RESISTOR,CHIP 47 1/10W (1608)
R996	*2 deleted		
	*1 1-218-895-11	s	RESISTOR,CHIP 100K 1/10W(1608)
R997	*2 1-216-864-11	s	CONDUCTOR, CHIP (1608)
R998	*2 deleted		
	*1 1-211-985-11	s	RESISTOR,CHIP 47 1/10W (1608)
R999	1-218-895-11	s	RESISTOR,CHIP 100K 1/10W(1608)
R1000	1-218-823-11	s	RESISTOR,CHIP 100 1/10W (1608)
R1001	1-218-823-11	s	RESISTOR,CHIP 100 1/10W (1608)
R1002	1-218-823-11	s	RESISTOR,CHIP 100 1/10W (1608)
R1003	1-218-823-11	s	RESISTOR,CHIP 100 1/10W (1608)
R1004	1-211-985-11	s	RESISTOR,CHIP 47 1/10W (1608)
R1005	1-211-985-11	s	RESISTOR,CHIP 47 1/10W (1608)
R1006	1-211-985-11	s	RESISTOR,CHIP 47 1/10W (1608)
R1008	1-211-985-11	s	RESISTOR,CHIP 47 1/10W (1608)
R1009	1-211-985-11	s	RESISTOR,CHIP 47 1/10W (1608)
R1010	1-211-985-11	s	RESISTOR,CHIP 47 1/10W (1608)
R1011	1-211-985-11	s	RESISTOR,CHIP 47 1/10W (1608)
R1012	1-211-985-11	s	RESISTOR,CHIP 47 1/10W (1608)
R1013	1-211-985-11	s	RESISTOR,CHIP 47 1/10W (1608)
R1015	1-218-847-11	s	RESISTOR, CHIP 1K 1/10W (1608)
R1016	1-218-847-11	s	RESISTOR, CHIP 1K 1/10W (1608)
R1017	1-218-847-11	s	RESISTOR, CHIP 1K 1/10W (1608)
R1018	1-218-847-11	s	RESISTOR, CHIP 1K 1/10W (1608)
R1019	1-211-977-11	s	RESISTOR,CHIP 22 1/10W (1608)
R1020	1-211-977-11	s	RESISTOR,CHIP 22 1/10W (1608)
R1021	1-211-977-11	s	RESISTOR,CHIP 22 1/10W (1608)
R1022	1-211-977-11	s	RESISTOR,CHIP 22 1/10W (1608)
R1023	1-211-977-11	s	RESISTOR,CHIP 22 1/10W (1608)
R1024	1-211-977-11	s	RESISTOR,CHIP 22 1/10W (1608)
R1025	1-211-977-11	s	RESISTOR,CHIP 22 1/10W (1608)
R1028	1-211-977-11	s	RESISTOR,CHIP 22 1/10W (1608)
R1029	1-211-977-11	s	RESISTOR,CHIP 22 1/10W (1608)
R1030	1-211-977-11	s	RESISTOR,CHIP 22 1/10W (1608)

(HPR-1 BOARD for HDW RECORDER)

Ref. No. or Q'ty	Part No.	SP	Description
R1031	1-211-977-11	s	RESISTOR,CHIP 22 1/10W (1608)
R1032	1-211-977-11	s	RESISTOR,CHIP 22 1/10W (1608)
R1033	1-211-977-11	s	RESISTOR,CHIP 22 1/10W (1608)
R1034	1-211-977-11	s	RESISTOR,CHIP 22 1/10W (1608)
R1035	1-211-977-11	s	RESISTOR,CHIP 22 1/10W (1608)
R1036	1-211-977-11	s	RESISTOR,CHIP 22 1/10W (1608)
R1037	1-211-985-11	s	RESISTOR,CHIP 47 1/10W (1608)
R1038	1-211-985-11	s	RESISTOR,CHIP 47 1/10W (1608)
R1039	1-211-985-11	s	RESISTOR,CHIP 47 1/10W (1608)
R1049	1-218-847-11	s	RESISTOR, CHIP 1K 1/10W (1608)
R1050	1-218-847-11	s	RESISTOR, CHIP 1K 1/10W (1608)
R1051	1-211-977-11	s	RESISTOR,CHIP 22 1/10W (1608)
R1052	1-211-977-11	s	RESISTOR,CHIP 22 1/10W (1608)
R1053	1-211-977-11	s	RESISTOR,CHIP 22 1/10W (1608)
R1054	1-211-977-11	s	RESISTOR,CHIP 22 1/10W (1608)
R1055	1-211-977-11	s	RESISTOR,CHIP 22 1/10W (1608)
R1056	1-211-977-11	s	RESISTOR,CHIP 22 1/10W (1608)
R1057	1-211-977-11	s	RESISTOR,CHIP 22 1/10W (1608)
R1058	1-211-977-11	s	RESISTOR,CHIP 22 1/10W (1608)
R1059	1-211-977-11	s	RESISTOR,CHIP 22 1/10W (1608)
R1060	1-211-977-11	s	RESISTOR,CHIP 22 1/10W (1608)
R1061	1-219-610-11	s	RESISTOR, (SQUARE TYPE) 0.022
R1062	1-211-977-11	s	RESISTOR,CHIP 22 1/10W (1608)
R1063	1-211-977-11	s	RESISTOR,CHIP 22 1/10W (1608)
R1064	1-218-883-11	s	RESISTOR,CHIP 33K 1/10W (1608)
R1065	1-218-879-11	s	RESISTOR,CHIP 22K 1/10W (1608)
R1066	1-218-863-11	s	RESISTOR,CHIP 4.7K 1/10W(1608)
R1069	1-218-823-11	s	RESISTOR,CHIP 100 1/10W (1608)
R1071	1-218-863-11	s	RESISTOR,CHIP 4.7K 1/10W(1608)
R1072	1-218-873-11	s	RESISTOR,CHIP 12K 1/10W (1608)
R1073	1-218-871-11	s	RESISTOR,CHIP 10K 1/10W (1608)
R1074	1-211-977-11	s	RESISTOR,CHIP 22 1/10W (1608)
R1075	1-211-977-11	s	RESISTOR,CHIP 22 1/10W (1608)
R1076	1-219-610-11	s	RESISTOR, (SQUARE TYPE) 0.022
R1080	1-211-977-11	s	RESISTOR,CHIP 22 1/10W (1608)
R1081	1-211-977-11	s	RESISTOR,CHIP 22 1/10W (1608)
R1082	1-216-864-11	s	CONDUCTOR, CHIP (1608)
R1089	1-218-863-11	s	RESISTOR,CHIP 4.7K 1/10W(1608)
R1090	1-218-863-11	s	RESISTOR,CHIP 4.7K 1/10W(1608)
R1091	1-218-863-11	s	RESISTOR,CHIP 4.7K 1/10W(1608)
R1092	1-218-863-11	s	RESISTOR,CHIP 4.7K 1/10W(1608)
R1093	1-218-863-11	s	RESISTOR,CHIP 4.7K 1/10W(1608)
R1094	1-218-863-11	s	RESISTOR,CHIP 4.7K 1/10W(1608)
R1095	1-218-887-11	s	RESISTOR,CHIP 47K 1/10W (1608)
R1200	*2 1-216-864-11	s	CONDUCTOR, CHIP (1608)
R1201	*2 1-216-864-11	s	CONDUCTOR, CHIP (1608)
R1202	*2 1-216-864-11	s	CONDUCTOR, CHIP (1608)
R1203	*2 1-216-864-11	s	CONDUCTOR, CHIP (1608)
R1205	*2 1-211-977-11	s	RESISTOR,CHIP 22 1/10W (1608)
R1206	*2 1-211-977-11	s	RESISTOR,CHIP 22 1/10W (1608)
RB100	1-233-575-11	s	RES, CHIP NETWORK 22
RB101	1-233-575-11	s	RES, CHIP NETWORK 22
RB102	1-233-575-11	s	RES, CHIP NETWORK 22
RB103	1-233-575-11	s	RES, CHIP NETWORK 22
RB104	*2 1-233-575-11	s	RES, CHIP NETWORK 22
RB105	*2 1-233-575-11	s	RES, CHIP NETWORK 22
RB106	*2 1-233-575-11	s	RES, CHIP NETWORK 22
RB200	1-233-575-11	s	RES, CHIP NETWORK 22
RB201	1-233-575-11	s	RES, CHIP NETWORK 22

(HPR-1 BOARD for HDW RECORDER)

Ref. No. or Q'ty	Part No.	SP	Description	
RB207	1-239-409-11	s	RESISTOR NETWORK 47 (1608)	
RB208	1-239-409-11	s	RESISTOR NETWORK 47 (1608)	
RB210 *2	deleted			
*1	1-233-575-11	s	RES, CHIP NETWORK 22	
RB211 *2	deleted			
*1	1-233-575-11	s	RES, CHIP NETWORK 22	
RB217	1-239-409-11	s	RESISTOR NETWORK 47 (1608)	
RB218	1-239-409-11	s	RESISTOR NETWORK 47 (1608)	
RB301	1-233-412-11	s	RESISTOR,CHIP NETWORK 1K	
RB302	1-233-810-21	s	RES, NETWORK 100K	(3216)
RB304	1-239-409-11	s	RESISTOR NETWORK 47 (1608)	
RB305	1-239-409-11	s	RESISTOR NETWORK 47 (1608)	
RB500	1-239-409-11	s	RESISTOR NETWORK 47 (1608)	
RB501	1-239-409-11	s	RESISTOR NETWORK 47 (1608)	
RB502	1-239-409-11	s	RESISTOR NETWORK 47 (1608)	
RB503	1-239-409-11	s	RESISTOR NETWORK 47 (1608)	
RB504 *2	1-233-575-11	s	RES, CHIP NETWORK 22	
RB505 *2	1-233-575-11	s	RES, CHIP NETWORK 22	
RB506	1-239-409-11	s	RESISTOR NETWORK 47 (1608)	
RB507	1-239-409-11	s	RESISTOR NETWORK 47 (1608)	
RB508	1-239-409-11	s	RESISTOR NETWORK 47 (1608)	
RB509	1-239-409-11	s	RESISTOR NETWORK 47 (1608)	
RB510	1-239-409-11	s	RESISTOR NETWORK 47 (1608)	
RB511	1-239-409-11	s	RESISTOR NETWORK 47 (1608)	
RB512	1-239-409-11	s	RESISTOR NETWORK 47 (1608)	
RB513	1-239-409-11	s	RESISTOR NETWORK 47 (1608)	
RB514	1-239-409-11	s	RESISTOR NETWORK 47 (1608)	
RB515	1-239-409-11	s	RESISTOR NETWORK 47 (1608)	
RB516	1-239-409-11	s	RESISTOR NETWORK 47 (1608)	
RB517	1-239-409-11	s	RESISTOR NETWORK 47 (1608)	
RB518	1-233-412-11	s	RESISTOR,CHIP NETWORK 1K	
RB519	1-233-412-11	s	RESISTOR,CHIP NETWORK 1K	
RB520	1-233-810-21	s	RES, NETWORK 100K	(3216)
RB521 *2	1-233-575-11	s	RES, CHIP NETWORK 22	
RB522 *2	1-233-575-11	s	RES, CHIP NETWORK 22	
RB523 *2	1-233-575-11	s	RES, CHIP NETWORK 22	
RB524 *2	1-233-575-11	s	RES, CHIP NETWORK 22	
RB525 *2	1-233-810-21	s	RES, NETWORK 100K	(3216)
RB526 *2	1-233-810-21	s	RES, NETWORK 100K	(3216)
RB527 *2	1-233-810-21	s	RES, NETWORK 100K	(3216)
RB528 *2	1-233-810-21	s	RES, NETWORK 100K	(3216)
RB529 *2	1-233-810-21	s	RES, NETWORK 100K	(3216)
RB600	1-233-575-11	s	RES, CHIP NETWORK 22	
RB601	1-233-575-11	s	RES, CHIP NETWORK 22	
RB607	1-233-575-11	s	RES, CHIP NETWORK 22	
RB608	1-233-575-11	s	RES, CHIP NETWORK 22	
RB700	1-233-575-11	s	RES, CHIP NETWORK 22	
RB701	1-233-575-11	s	RES, CHIP NETWORK 22	
RB702	1-233-575-11	s	RES, CHIP NETWORK 22	
RB703	1-233-575-11	s	RES, CHIP NETWORK 22	
RB704	1-233-575-11	s	RES, CHIP NETWORK 22	
RB705	1-233-575-11	s	RES, CHIP NETWORK 22	
RB706	1-233-575-11	s	RES, CHIP NETWORK 22	
RB707	1-233-575-11	s	RES, CHIP NETWORK 22	
RB708	1-239-409-11	s	RESISTOR NETWORK 47 (1608)	
RB709	1-239-409-11	s	RESISTOR NETWORK 47 (1608)	
RB710	1-239-409-11	s	RESISTOR NETWORK 47 (1608)	
RB711	1-239-409-11	s	RESISTOR NETWORK 47 (1608)	
RB712	1-239-409-11	s	RESISTOR NETWORK 47 (1608)	

(HPR-1 BOARD for HDW RECORDER)

Ref. No. or Q'ty	Part No.	SP	Description	
RB713	1-239-409-11	s	RESISTOR NETWORK 47 (1608)	
RB714	1-239-409-11	s	RESISTOR NETWORK 47 (1608)	
RB715	1-239-409-11	s	RESISTOR NETWORK 47 (1608)	
RB850	1-233-575-11	s	RES, CHIP NETWORK 22	
RB851	1-233-575-11	s	RES, CHIP NETWORK 22	
RB852	1-233-575-11	s	RES, CHIP NETWORK 22	
RB853	1-233-575-11	s	RES, CHIP NETWORK 22	
RB854	1-233-575-11	s	RES, CHIP NETWORK 22	
RB855	1-233-575-11	s	RES, CHIP NETWORK 22	
RB900	1-233-810-21	s	RES, NETWORK 100K	(3216)
RB901	1-233-810-21	s	RES, NETWORK 100K	(3216)
RB902	1-233-810-21	s	RES, NETWORK 100K	(3216)
RB903	1-233-810-21	s	RES, NETWORK 100K	(3216)
RB904	1-233-810-21	s	RES, NETWORK 100K	(3216)
RB905	1-233-810-21	s	RES, NETWORK 100K	(3216)
RB906	1-233-810-21	s	RES, NETWORK 100K	(3216)
RB907	1-233-810-21	s	RES, NETWORK 100K	(3216)
RB908	1-239-409-11	s	RESISTOR NETWORK 47 (1608)	
RB909	1-239-409-11	s	RESISTOR NETWORK 47 (1608)	
RB910	1-239-409-11	s	RESISTOR NETWORK 47 (1608)	
RB911	1-239-409-11	s	RESISTOR NETWORK 47 (1608)	
RB912	1-239-409-11	s	RESISTOR NETWORK 47 (1608)	
RB913	1-239-409-11	s	RESISTOR NETWORK 47 (1608)	
RB914	1-239-409-11	s	RESISTOR NETWORK 47 (1608)	
RB915	1-233-810-21	s	RES, NETWORK 100K	(3216)
RB916	1-233-810-21	s	RES, NETWORK 100K	(3216)
RB917	1-233-810-21	s	RES, NETWORK 100K	(3216)
RB918	1-233-414-11	s	RESISTOR,CHIP NETWORK 4.7K	
RB919	1-233-414-11	s	RESISTOR,CHIP NETWORK 4.7K	
RB920	1-233-414-11	s	RESISTOR,CHIP NETWORK 4.7K	
RB921	1-239-409-11	s	RESISTOR NETWORK 47 (1608)	
RB922	1-239-409-11	s	RESISTOR NETWORK 47 (1608)	
RB923	1-239-409-11	s	RESISTOR NETWORK 47 (1608)	
RB924	1-233-414-11	s	RESISTOR,CHIP NETWORK 4.7K	
RB925	1-239-409-11	s	RESISTOR NETWORK 47 (1608)	
RB926 *2	deleted			
*1	1-233-810-21	s	RES, NETWORK 100K	(3216)
RB927 *2	deleted			
*1	1-239-409-11	s	RESISTOR NETWORK 47 (1608)	
RB928	1-233-810-21	s	RES, NETWORK 100K	(3216)
RB929	1-233-810-21	s	RES, NETWORK 100K	(3216)
RB930	1-233-810-21	s	RES, NETWORK 100K	(3216)
RB931 *2	1-233-575-11	s	RES, CHIP NETWORK 22	
RB932 *2	1-233-575-11	s	RES, CHIP NETWORK 22	
RB933 *2	1-233-575-11	s	RES, CHIP NETWORK 22	
RB1000	1-233-412-11	s	RESISTOR,CHIP NETWORK 1K	
RB1001	1-233-411-11	s	RESISTOR,CHIP NETWORK 220/3216	
RB1002	1-233-412-11	s	RESISTOR,CHIP NETWORK 1K	
RB1003	1-233-411-11	s	RESISTOR,CHIP NETWORK 220/3216	
RB1004	1-233-411-11	s	RESISTOR,CHIP NETWORK 220/3216	
RB1005	1-233-411-11	s	RESISTOR,CHIP NETWORK 220/3216	
RB1006	1-233-412-11	s	RESISTOR,CHIP NETWORK 1K	
RB1007	1-233-412-11	s	RESISTOR,CHIP NETWORK 1K	
RB1008	1-239-409-11	s	RESISTOR NETWORK 47 (1608)	
RB1009	1-233-412-11	s	RESISTOR,CHIP NETWORK 1K	
RB1200*2	1-233-575-11	s	RES, CHIP NETWORK 22	
RB1201*2	1-233-575-11	s	RES, CHIP NETWORK 22	
S900	1-692-270-41	s	SWITCH, SLIDE	

(HPR-1 BOARD for HDW RECORDER)

Ref. No. or Q'ty	Part No.	SP	Description
TP100	1-535-877-22	s	CHIP,CHECKER (TEST POINT)
TP101	1-535-877-22	s	CHIP,CHECKER (TEST POINT)
TP102	1-535-877-22	s	CHIP,CHECKER (TEST POINT)
TP103	1-535-877-22	s	CHIP,CHECKER (TEST POINT)
TP104	1-535-877-22	s	CHIP,CHECKER (TEST POINT)
TP200	1-535-877-22	s	CHIP,CHECKER (TEST POINT)
TP201	1-535-877-22	s	CHIP,CHECKER (TEST POINT)
TP202	1-535-877-22	s	CHIP,CHECKER (TEST POINT)
TP204	1-535-877-22	s	CHIP,CHECKER (TEST POINT)
TP206	1-535-877-22	s	CHIP,CHECKER (TEST POINT)
TP301	1-535-877-22	s	CHIP,CHECKER (TEST POINT)
TP602	1-535-877-22	s	CHIP,CHECKER (TEST POINT)
TP605	1-535-877-22	s	CHIP,CHECKER (TEST POINT)
TP606	1-535-877-22	s	CHIP,CHECKER (TEST POINT)
TP607	1-535-877-22	s	CHIP,CHECKER (TEST POINT)
TP1008	1-535-877-22	s	CHIP,CHECKER (TEST POINT)

HPR-1A BOARD for HDW PLAYER

[Lot No. 261 -] HDW-M2100/P, A2100

*1: [Lot No. 261 -] [Board No. suffix 14 -]
*2: [Lot No. 3C1 -] [Board No. suffix 15 -]

Ref. No. or Q'ty	Part No.	SP	Description
1pc	A-8327-119-B	s	MOUNTED CIRCUIT BOARD, HPR-1A
6pcs	7-682-902-11	s	SCREW +PWH 2.6X5
1pc	3-179-084-11	s	LEVER (R), C BOARD
1pc	3-179-085-11	s	LEVER (L), C BOARD
C500	1-107-826-11	s	CAPACITOR,CHIP CERAMIC 0.1MF
C501	1-107-826-11	s	CAPACITOR,CHIP CERAMIC 0.1MF
C502	1-107-826-11	s	CAPACITOR,CHIP CERAMIC 0.1MF
C506	1-107-826-11	s	CAPACITOR,CHIP CERAMIC 0.1MF
C507	1-107-826-11	s	CAPACITOR,CHIP CERAMIC 0.1MF
C508	1-107-826-11	s	CAPACITOR,CHIP CERAMIC 0.1MF
C509	1-107-826-11	s	CAPACITOR,CHIP CERAMIC 0.1MF
C510	1-107-826-11	s	CAPACITOR,CHIP CERAMIC 0.1MF
C513	1-107-826-11	s	CAPACITOR,CHIP CERAMIC 0.1MF
C518	*2 1-107-826-11	s	CAPACITOR,CHIP CERAMIC 0.1MF
C570	1-125-889-11	s	CAPACITOR, CERAMIC 2.2MF
C571	1-125-889-11	s	CAPACITOR, CERAMIC 2.2MF
C572	1-127-692-11	s	CAP, CHIP CERAMIC 10MF B 3216
C573	*2 1-107-826-11	s	CAPACITOR,CHIP CERAMIC 0.1MF
C600	1-162-970-11	s	CAPACITOR CERAMIC 0.01MF/25V B
C601	1-162-970-11	s	CAPACITOR CERAMIC 0.01MF/25V B
C602	1-162-970-11	s	CAPACITOR CERAMIC 0.01MF/25V B
C603	1-162-970-11	s	CAPACITOR CERAMIC 0.01MF/25V B
C604	1-162-970-11	s	CAPACITOR CERAMIC 0.01MF/25V B
C605	1-162-970-11	s	CAPACITOR CERAMIC 0.01MF/25V B
C606	1-162-970-11	s	CAPACITOR CERAMIC 0.01MF/25V B
C607	1-162-970-11	s	CAPACITOR CERAMIC 0.01MF/25V B
C608	1-162-970-11	s	CAPACITOR CERAMIC 0.01MF/25V B
C609	1-162-970-11	s	CAPACITOR CERAMIC 0.01MF/25V B
C610	1-162-970-11	s	CAPACITOR CERAMIC 0.01MF/25V B
C611	1-162-970-11	s	CAPACITOR CERAMIC 0.01MF/25V B
C612	1-162-970-11	s	CAPACITOR CERAMIC 0.01MF/25V B
C613	1-162-970-11	s	CAPACITOR CERAMIC 0.01MF/25V B
C614	1-162-970-11	s	CAPACITOR CERAMIC 0.01MF/25V B
C615	1-162-970-11	s	CAPACITOR CERAMIC 0.01MF/25V B
C616	1-162-970-11	s	CAPACITOR CERAMIC 0.01MF/25V B
C617	1-162-970-11	s	CAPACITOR CERAMIC 0.01MF/25V B
C618	1-162-970-11	s	CAPACITOR CERAMIC 0.01MF/25V B
C619	1-162-970-11	s	CAPACITOR CERAMIC 0.01MF/25V B
C620	1-162-970-11	s	CAPACITOR CERAMIC 0.01MF/25V B
C621	1-162-970-11	s	CAPACITOR CERAMIC 0.01MF/25V B
C622	1-162-970-11	s	CAPACITOR CERAMIC 0.01MF/25V B
C623	1-162-970-11	s	CAPACITOR CERAMIC 0.01MF/25V B
C624	1-162-970-11	s	CAPACITOR CERAMIC 0.01MF/25V B
C625	1-162-970-11	s	CAPACITOR CERAMIC 0.01MF/25V B
C626	1-162-970-11	s	CAPACITOR CERAMIC 0.01MF/25V B
C627	1-162-970-11	s	CAPACITOR CERAMIC 0.01MF/25V B
C628	1-162-970-11	s	CAPACITOR CERAMIC 0.01MF/25V B
C629	1-162-970-11	s	CAPACITOR CERAMIC 0.01MF/25V B
C630	1-162-970-11	s	CAPACITOR CERAMIC 0.01MF/25V B
C631	1-162-970-11	s	CAPACITOR CERAMIC 0.01MF/25V B
C632	*2 1-127-692-11	s	CAP, CHIP CERAMIC 10MF B 3216
	*1 1-127-708-11	s	CAP, POLYPYRROLE 100MF
C633	*2 deleted		
	*1 1-131-603-11	s	CAP, POLYPYRROLE 100MF
C634	1-107-826-11	s	CAPACITOR,CHIP CERAMIC 0.1MF

(HPR-1A BOARD for HDW PLAYER)

Ref. No. or Q'ty	Part No.	SP	Description
C635	1-107-826-11	s	CAPACITOR,CHIP CERAMIC 0.1MF
C636	1-107-826-11	s	CAPACITOR,CHIP CERAMIC 0.1MF
C637	1-107-826-11	s	CAPACITOR,CHIP CERAMIC 0.1MF
C638	1-107-826-11	s	CAPACITOR,CHIP CERAMIC 0.1MF
C639	1-107-826-11	s	CAPACITOR,CHIP CERAMIC 0.1MF
C640	1-107-826-11	s	CAPACITOR,CHIP CERAMIC 0.1MF
C641	1-107-826-11	s	CAPACITOR,CHIP CERAMIC 0.1MF
C642	1-107-826-11	s	CAPACITOR,CHIP CERAMIC 0.1MF
C643	1-107-826-11	s	CAPACITOR,CHIP CERAMIC 0.1MF
C644	1-107-826-11	s	CAPACITOR,CHIP CERAMIC 0.1MF
C645	1-107-826-11	s	CAPACITOR,CHIP CERAMIC 0.1MF
C646	1-162-970-11	s	CAPACITOR CERAMIC 0.01MF/25V B
C647	1-162-970-11	s	CAPACITOR CERAMIC 0.01MF/25V B
C648	1-162-970-11	s	CAPACITOR CERAMIC 0.01MF/25V B
C649	1-162-970-11	s	CAPACITOR CERAMIC 0.01MF/25V B
C650	1-162-970-11	s	CAPACITOR CERAMIC 0.01MF/25V B
C651	1-162-970-11	s	CAPACITOR CERAMIC 0.01MF/25V B
C652	1-162-970-11	s	CAPACITOR CERAMIC 0.01MF/25V B
C653	1-162-970-11	s	CAPACITOR CERAMIC 0.01MF/25V B
C654	1-162-970-11	s	CAPACITOR CERAMIC 0.01MF/25V B
C655	1-162-970-11	s	CAPACITOR CERAMIC 0.01MF/25V B
C656	1-162-970-11	s	CAPACITOR CERAMIC 0.01MF/25V B
C657	1-162-970-11	s	CAPACITOR CERAMIC 0.01MF/25V B
C658	1-162-970-11	s	CAPACITOR CERAMIC 0.01MF/25V B
C659	1-162-970-11	s	CAPACITOR CERAMIC 0.01MF/25V B
C660	1-162-970-11	s	CAPACITOR CERAMIC 0.01MF/25V B
C661	1-162-970-11	s	CAPACITOR CERAMIC 0.01MF/25V B
C662	1-162-970-11	s	CAPACITOR CERAMIC 0.01MF/25V B
C663	1-162-970-11	s	CAPACITOR CERAMIC 0.01MF/25V B
C664	1-162-970-11	s	CAPACITOR CERAMIC 0.01MF/25V B
C665	1-162-970-11	s	CAPACITOR CERAMIC 0.01MF/25V B
C666	1-162-970-11	s	CAPACITOR CERAMIC 0.01MF/25V B
C667	1-162-970-11	s	CAPACITOR CERAMIC 0.01MF/25V B
C668	1-162-970-11	s	CAPACITOR CERAMIC 0.01MF/25V B
C669	1-162-970-11	s	CAPACITOR CERAMIC 0.01MF/25V B
C670	1-162-970-11	s	CAPACITOR CERAMIC 0.01MF/25V B
C671	1-162-970-11	s	CAPACITOR CERAMIC 0.01MF/25V B
C672	1-162-970-11	s	CAPACITOR CERAMIC 0.01MF/25V B
C673	1-162-970-11	s	CAPACITOR CERAMIC 0.01MF/25V B
C674	1-162-970-11	s	CAPACITOR CERAMIC 0.01MF/25V B
C675	1-162-970-11	s	CAPACITOR CERAMIC 0.01MF/25V B
C676	1-162-970-11	s	CAPACITOR CERAMIC 0.01MF/25V B
C677	1-162-970-11	s	CAPACITOR CERAMIC 0.01MF/25V B
C678	*2 deleted		
	*1 1-127-708-11	s	CAP, POLYPYRROLE 100MF
C679	*2 deleted		
	*1 1-131-603-11	s	CAP, POLYPYRROLE 100MF
C680	1-107-826-11	s	CAPACITOR,CHIP CERAMIC 0.1MF
C681	1-107-826-11	s	CAPACITOR,CHIP CERAMIC 0.1MF
C682	1-107-826-11	s	CAPACITOR,CHIP CERAMIC 0.1MF
C683	1-107-826-11	s	CAPACITOR,CHIP CERAMIC 0.1MF
C684	1-107-826-11	s	CAPACITOR,CHIP CERAMIC 0.1MF
C685	1-107-826-11	s	CAPACITOR,CHIP CERAMIC 0.1MF
C686	1-107-826-11	s	CAPACITOR,CHIP CERAMIC 0.1MF
C687	1-107-826-11	s	CAPACITOR,CHIP CERAMIC 0.1MF
C688	1-107-826-11	s	CAPACITOR,CHIP CERAMIC 0.1MF
C689	1-107-826-11	s	CAPACITOR,CHIP CERAMIC 0.1MF
C690	1-107-826-11	s	CAPACITOR,CHIP CERAMIC 0.1MF
C691	1-107-826-11	s	CAPACITOR,CHIP CERAMIC 0.1MF

(HPR-1A BOARD for HDW PLAYER)

Ref. No. or Q'ty	Part No.	SP	Description
C692	1-162-970-11	s	CAPACITOR CERAMIC 0.01MF/25V B
C693	1-162-970-11	s	CAPACITOR CERAMIC 0.01MF/25V B
C694	1-162-970-11	s	CAPACITOR CERAMIC 0.01MF/25V B
C695	1-162-970-11	s	CAPACITOR CERAMIC 0.01MF/25V B
C696	1-162-970-11	s	CAPACITOR CERAMIC 0.01MF/25V B
C697	1-162-970-11	s	CAPACITOR CERAMIC 0.01MF/25V B
C698	1-162-970-11	s	CAPACITOR CERAMIC 0.01MF/25V B
C699	1-162-970-11	s	CAPACITOR CERAMIC 0.01MF/25V B
C700	1-162-970-11	s	CAPACITOR CERAMIC 0.01MF/25V B
C701	1-162-970-11	s	CAPACITOR CERAMIC 0.01MF/25V B
C702	1-162-970-11	s	CAPACITOR CERAMIC 0.01MF/25V B
C703	1-162-970-11	s	CAPACITOR CERAMIC 0.01MF/25V B
C704	1-162-970-11	s	CAPACITOR CERAMIC 0.01MF/25V B
C705	1-162-970-11	s	CAPACITOR CERAMIC 0.01MF/25V B
C706	1-162-970-11	s	CAPACITOR CERAMIC 0.01MF/25V B
C707	1-162-970-11	s	CAPACITOR CERAMIC 0.01MF/25V B
C708	1-162-970-11	s	CAPACITOR CERAMIC 0.01MF/25V B
C709	1-162-970-11	s	CAPACITOR CERAMIC 0.01MF/25V B
C710	1-162-970-11	s	CAPACITOR CERAMIC 0.01MF/25V B
C711	1-162-970-11	s	CAPACITOR CERAMIC 0.01MF/25V B
C712	1-162-970-11	s	CAPACITOR CERAMIC 0.01MF/25V B
C713	1-162-970-11	s	CAPACITOR CERAMIC 0.01MF/25V B
C714	1-162-970-11	s	CAPACITOR CERAMIC 0.01MF/25V B
C715	1-162-970-11	s	CAPACITOR CERAMIC 0.01MF/25V B
C716	1-162-970-11	s	CAPACITOR CERAMIC 0.01MF/25V B
C717	1-162-970-11	s	CAPACITOR CERAMIC 0.01MF/25V B
C718	1-162-970-11	s	CAPACITOR CERAMIC 0.01MF/25V B
C719	1-162-970-11	s	CAPACITOR CERAMIC 0.01MF/25V B
C720	1-162-970-11	s	CAPACITOR CERAMIC 0.01MF/25V B
C721	1-162-970-11	s	CAPACITOR CERAMIC 0.01MF/25V B
C722	1-162-970-11	s	CAPACITOR CERAMIC 0.01MF/25V B
C723	1-162-970-11	s	CAPACITOR CERAMIC 0.01MF/25V B
C724	1-162-970-11	s	CAPACITOR CERAMIC 0.01MF/25V B
C725	1-162-970-11	s	CAPACITOR CERAMIC 0.01MF/25V B
C726	1-162-970-11	s	CAPACITOR CERAMIC 0.01MF/25V B
C727	1-162-970-11	s	CAPACITOR CERAMIC 0.01MF/25V B
C728	1-162-970-11	s	CAPACITOR CERAMIC 0.01MF/25V B
C735	1-107-826-11	s	CAPACITOR,CHIP CERAMIC 0.1MF
C736	1-107-826-11	s	CAPACITOR,CHIP CERAMIC 0.1MF
C737	1-107-826-11	s	CAPACITOR,CHIP CERAMIC 0.1MF
C738	1-107-826-11	s	CAPACITOR,CHIP CERAMIC 0.1MF
C739	1-107-826-11	s	CAPACITOR,CHIP CERAMIC 0.1MF
C740	1-107-826-11	s	CAPACITOR,CHIP CERAMIC 0.1MF
C741	1-107-826-11	s	CAPACITOR,CHIP CERAMIC 0.1MF
C742	1-107-826-11	s	CAPACITOR,CHIP CERAMIC 0.1MF
C743	1-107-826-11	s	CAPACITOR,CHIP CERAMIC 0.1MF
C744	1-107-826-11	s	CAPACITOR,CHIP CERAMIC 0.1MF
C745	1-107-826-11	s	CAPACITOR,CHIP CERAMIC 0.1MF
C746	1-107-826-11	s	CAPACITOR,CHIP CERAMIC 0.1MF
C747	1-107-826-11	s	CAPACITOR,CHIP CERAMIC 0.1MF
C748	1-107-826-11	s	CAPACITOR,CHIP CERAMIC 0.1MF
C749	*2 1-165-870-21	s	CAPACITOR, ELECT 100MF(6.3X6)
	*1 1-127-708-11	s	CAP, POLYPYRROLE 100MF
C750	*2 deleted		
	*1 1-131-603-11	s	CAP, POLYPYRROLE 100MF
C756	1-107-826-11	s	CAPACITOR,CHIP CERAMIC 0.1MF
C765	*2 1-127-692-11	s	CAP, CHIP CERAMIC 10MF B 3216
C766	*2 1-127-692-11	s	CAP, CHIP CERAMIC 10MF B 3216
C767	*2 1-127-692-11	s	CAP, CHIP CERAMIC 10MF B 3216

(HPR-1A BOARD for HDW PLAYER)

Ref. No. or Q'ty	Part No.	SP	Description
C768	*2 1-127-692-11	s	CAP, CHIP CERAMIC 10MF B 3216
C769	*2 1-127-692-11	s	CAP, CHIP CERAMIC 10MF B 3216
C803	1-162-970-11	s	CAPACITOR CERAMIC 0.01MF/25V B
C804	1-162-970-11	s	CAPACITOR CERAMIC 0.01MF/25V B
C805	1-162-970-11	s	CAPACITOR CERAMIC 0.01MF/25V B
C806	1-162-970-11	s	CAPACITOR CERAMIC 0.01MF/25V B
C807	1-162-970-11	s	CAPACITOR CERAMIC 0.01MF/25V B
C808	1-162-970-11	s	CAPACITOR CERAMIC 0.01MF/25V B
C809	1-162-970-11	s	CAPACITOR CERAMIC 0.01MF/25V B
C810	1-162-970-11	s	CAPACITOR CERAMIC 0.01MF/25V B
C811	1-162-970-11	s	CAPACITOR CERAMIC 0.01MF/25V B
C812	1-162-970-11	s	CAPACITOR CERAMIC 0.01MF/25V B
C813	1-162-970-11	s	CAPACITOR CERAMIC 0.01MF/25V B
C814	1-162-970-11	s	CAPACITOR CERAMIC 0.01MF/25V B
C815	1-162-970-11	s	CAPACITOR CERAMIC 0.01MF/25V B
C816	1-162-970-11	s	CAPACITOR CERAMIC 0.01MF/25V B
C817	1-162-970-11	s	CAPACITOR CERAMIC 0.01MF/25V B
C818	1-162-970-11	s	CAPACITOR CERAMIC 0.01MF/25V B
C819	1-162-970-11	s	CAPACITOR CERAMIC 0.01MF/25V B
C820	1-162-970-11	s	CAPACITOR CERAMIC 0.01MF/25V B
C821	1-162-970-11	s	CAPACITOR CERAMIC 0.01MF/25V B
C822	1-162-970-11	s	CAPACITOR CERAMIC 0.01MF/25V B
C823	1-162-970-11	s	CAPACITOR CERAMIC 0.01MF/25V B
C824	1-162-970-11	s	CAPACITOR CERAMIC 0.01MF/25V B
C829	1-107-826-11	s	CAPACITOR,CHIP CERAMIC 0.1MF
C832	1-107-826-11	s	CAPACITOR,CHIP CERAMIC 0.1MF
C835	1-107-826-11	s	CAPACITOR,CHIP CERAMIC 0.1MF
C836	1-107-826-11	s	CAPACITOR,CHIP CERAMIC 0.1MF
C837	1-107-826-11	s	CAPACITOR,CHIP CERAMIC 0.1MF
C850	*2 deleted		
	*1 1-127-708-11	s	CAP, POLYPYRROLE 100MF
C851	1-162-970-11	s	CAPACITOR CERAMIC 0.01MF/25V B
C852	1-162-970-11	s	CAPACITOR CERAMIC 0.01MF/25V B
C853	1-162-970-11	s	CAPACITOR CERAMIC 0.01MF/25V B
C854	1-162-970-11	s	CAPACITOR CERAMIC 0.01MF/25V B
C855	1-162-970-11	s	CAPACITOR CERAMIC 0.01MF/25V B
C856	1-162-970-11	s	CAPACITOR CERAMIC 0.01MF/25V B
C857	1-162-970-11	s	CAPACITOR CERAMIC 0.01MF/25V B
C858	1-162-970-11	s	CAPACITOR CERAMIC 0.01MF/25V B
C859	1-162-970-11	s	CAPACITOR CERAMIC 0.01MF/25V B
C860	*2 deleted		
	*1 1-131-603-11	s	CAP, POLYPYRROLE 100MF
C861	1-107-826-11	s	CAPACITOR,CHIP CERAMIC 0.1MF
C870	*2 1-127-692-11	s	CAP, CHIP CERAMIC 10MF B 3216
C871	*2 1-127-692-11	s	CAP, CHIP CERAMIC 10MF B 3216
C872	*2 1-127-692-11	s	CAP, CHIP CERAMIC 10MF B 3216
C873	*2 1-127-692-11	s	CAP, CHIP CERAMIC 10MF B 3216
C874	*2 1-127-692-11	s	CAP, CHIP CERAMIC 10MF B 3216
C875	*2 1-127-692-11	s	CAP, CHIP CERAMIC 10MF B 3216
C904	1-107-826-11	s	CAPACITOR,CHIP CERAMIC 0.1MF
C905	1-107-826-11	s	CAPACITOR,CHIP CERAMIC 0.1MF
C906	1-107-826-11	s	CAPACITOR,CHIP CERAMIC 0.1MF
C907	1-107-826-11	s	CAPACITOR,CHIP CERAMIC 0.1MF
C908	1-107-826-11	s	CAPACITOR,CHIP CERAMIC 0.1MF
C909	1-107-826-11	s	CAPACITOR,CHIP CERAMIC 0.1MF
C910	*2 1-127-692-11	s	CAP, CHIP CERAMIC 10MF B 3216
	*1 1-162-970-11	s	CAPACITOR CERAMIC 0.01MF/25V B
C911	1-107-826-11	s	CAPACITOR,CHIP CERAMIC 0.1MF
C912	1-107-826-11	s	CAPACITOR,CHIP CERAMIC 0.1MF

(HPR-1A BOARD for HDW PLAYER)

Ref. No. or Q'ty	Part No.	SP	Description
C913	1-107-826-11	s	CAPACITOR,CHIP CERAMIC 0.1MF
C914	1-107-826-11	s	CAPACITOR,CHIP CERAMIC 0.1MF
C915	1-107-826-11	s	CAPACITOR,CHIP CERAMIC 0.1MF
C918	1-107-826-11	s	CAPACITOR,CHIP CERAMIC 0.1MF
C919	1-107-826-11	s	CAPACITOR,CHIP CERAMIC 0.1MF
C921	*2 1-127-692-11	s	CAP, CHIP CERAMIC 10MF B 3216
C923	1-107-826-11	s	CAPACITOR,CHIP CERAMIC 0.1MF
C924	1-107-826-11	s	CAPACITOR,CHIP CERAMIC 0.1MF
C925	1-107-826-11	s	CAPACITOR,CHIP CERAMIC 0.1MF
C926	1-107-826-11	s	CAPACITOR,CHIP CERAMIC 0.1MF
C927	*2 deleted		
	*1 1-107-826-11	s	CAPACITOR,CHIP CERAMIC 0.1MF
C928	*2 deleted		
	*1 1-107-826-11	s	CAPACITOR,CHIP CERAMIC 0.1MF
C929	1-107-826-11	s	CAPACITOR,CHIP CERAMIC 0.1MF
C930	1-107-826-11	s	CAPACITOR,CHIP CERAMIC 0.1MF
C931	1-107-826-11	s	CAPACITOR,CHIP CERAMIC 0.1MF
C932	1-107-826-11	s	CAPACITOR,CHIP CERAMIC 0.1MF
C933	1-107-826-11	s	CAPACITOR,CHIP CERAMIC 0.1MF
C934	*2 1-107-826-11	s	CAPACITOR,CHIP CERAMIC 0.1MF
C1000	1-107-826-11	s	CAPACITOR,CHIP CERAMIC 0.1MF
C1001	1-107-826-11	s	CAPACITOR,CHIP CERAMIC 0.1MF
C1002	1-107-826-11	s	CAPACITOR,CHIP CERAMIC 0.1MF
C1005	1-107-826-11	s	CAPACITOR,CHIP CERAMIC 0.1MF
C1006	1-107-826-11	s	CAPACITOR,CHIP CERAMIC 0.1MF
C1007	1-107-826-11	s	CAPACITOR,CHIP CERAMIC 0.1MF
C1008	1-107-826-11	s	CAPACITOR,CHIP CERAMIC 0.1MF
C1009	1-107-826-11	s	CAPACITOR,CHIP CERAMIC 0.1MF
C1010	1-107-826-11	s	CAPACITOR,CHIP CERAMIC 0.1MF
C1011	1-107-826-11	s	CAPACITOR,CHIP CERAMIC 0.1MF
C1012	1-107-826-11	s	CAPACITOR,CHIP CERAMIC 0.1MF
C1013	1-127-692-11	s	CAP, CHIP CERAMIC 10MF B 3216
C1014	1-127-692-11	s	CAP, CHIP CERAMIC 10MF B 3216
C1015	1-107-826-11	s	CAPACITOR,CHIP CERAMIC 0.1MF
C1016	*2 1-127-692-11	s	CAP, CHIP CERAMIC 10MF B 3216
C1017	1-107-826-11	s	CAPACITOR,CHIP CERAMIC 0.1MF
C1019	1-107-826-11	s	CAPACITOR,CHIP CERAMIC 0.1MF
C1020	1-107-826-11	s	CAPACITOR,CHIP CERAMIC 0.1MF
C1021	1-107-826-11	s	CAPACITOR,CHIP CERAMIC 0.1MF
C1022	1-107-826-11	s	CAPACITOR,CHIP CERAMIC 0.1MF
C1023	1-127-692-11	s	CAP, CHIP CERAMIC 10MF B 3216
C1024	*2 1-127-692-11	s	CAP, CHIP CERAMIC 10MF B 3216
C1025	*2 1-165-870-21	s	CAPACITOR, ELECT 100MF(6.3X6)
	*1 1-131-603-11	s	CAP, POLYPYRROLE 100MF
C1026	*2 1-135-342-11	s	CAPACITOR,SOLID ELECT 56MF
	*1 1-131-603-11	s	CAP, POLYPYRROLE 100MF
C1029	1-107-826-11	s	CAPACITOR,CHIP CERAMIC 0.1MF
C1030	1-131-661-11	s	CAPACITOR,ELECT 100MF/10V CHIP
C1031	1-131-661-11	s	CAPACITOR,ELECT 100MF/10V CHIP
C1033	1-162-970-11	s	CAPACITOR CERAMIC 0.01MF/25V B
C1034	1-107-826-11	s	CAPACITOR,CHIP CERAMIC 0.1MF
C1035	1-107-826-11	s	CAPACITOR,CHIP CERAMIC 0.1MF
C1036	1-107-826-11	s	CAPACITOR,CHIP CERAMIC 0.1MF
C1037	*2 1-165-870-21	s	CAPACITOR, ELECT 100MF(6.3X6)
	*1 1-131-661-11	s	CAPACITOR,ELECT 100MF/10V CHIP
C1038	1-107-826-11	s	CAPACITOR,CHIP CERAMIC 0.1MF
C1039	1-107-826-11	s	CAPACITOR,CHIP CERAMIC 0.1MF
C1040	1-115-416-11	s	CAPACITOR,CERAMIC 1000PF/25V
C1041	1-131-661-11	s	CAPACITOR,ELECT 100MF/10V CHIP
C1042	1-107-826-11	s	CAPACITOR,CHIP CERAMIC 0.1MF

(HPR-1A BOARD for HDW PLAYER)

Ref. No. or Q'ty	Part No.	SP	Description
C1043	1-107-826-11	s	CAPACITOR,CHIP CERAMIC 0.1MF
C1044	1-107-826-11	s	CAPACITOR,CHIP CERAMIC 0.1MF
C1045 *2	deleted		
*1	1-131-661-11	s	CAPACITOR,ELECT 100MF/10V CHIP
C1046	1-107-826-11	s	CAPACITOR,CHIP CERAMIC 0.1MF
C1047	1-107-826-11	s	CAPACITOR,CHIP CERAMIC 0.1MF
C1048	1-107-826-11	s	CAPACITOR,CHIP CERAMIC 0.1MF
C1049	1-125-889-11	s	CAPACITOR, CERAMIC 2.2MF
C1050	1-115-416-11	s	CAPACITOR,CERAMIC 1000PF/25V
C1051	1-162-970-11	s	CAPACITOR CERAMIC 0.01MF/25V B
C1053 *2	1-135-342-11	s	CAPACITOR,SOLID ELECT 56MF
*1	1-131-603-11	s	CAP, POLYPYRROLE 100MF
C1054 *2	1-165-870-21	s	CAPACITOR, ELECT 100MF(6.3X6)
*1	1-131-603-11	s	CAP, POLYPYRROLE 100MF
C1055 *2	1-165-870-21	s	CAPACITOR, ELECT 100MF(6.3X6)
*1	1-131-661-11	s	CAPACITOR,ELECT 100MF/10V CHIP
C1056	1-125-889-11	s	CAPACITOR, CERAMIC 2.2MF
C1059	1-107-826-11	s	CAPACITOR,CHIP CERAMIC 0.1MF
C1060	1-107-826-11	s	CAPACITOR,CHIP CERAMIC 0.1MF
C1061	1-107-826-11	s	CAPACITOR,CHIP CERAMIC 0.1MF
C1600	1-162-970-11	s	CAPACITOR CERAMIC 0.01MF/25V B
C1601	1-162-970-11	s	CAPACITOR CERAMIC 0.01MF/25V B
C1602 *2	deleted		
*1	1-131-603-11	s	CAP, POLYPYRROLE 100MF
C1603	1-162-970-11	s	CAPACITOR CERAMIC 0.01MF/25V B
C1604	1-162-970-11	s	CAPACITOR CERAMIC 0.01MF/25V B
C1605	1-162-970-11	s	CAPACITOR CERAMIC 0.01MF/25V B
C1606	1-162-970-11	s	CAPACITOR CERAMIC 0.01MF/25V B
C1607	1-162-970-11	s	CAPACITOR CERAMIC 0.01MF/25V B
C1608	1-162-970-11	s	CAPACITOR CERAMIC 0.01MF/25V B
C1609	1-162-970-11	s	CAPACITOR CERAMIC 0.01MF/25V B
C1610	1-162-970-11	s	CAPACITOR CERAMIC 0.01MF/25V B
C1611	1-162-970-11	s	CAPACITOR CERAMIC 0.01MF/25V B
C1612	1-162-970-11	s	CAPACITOR CERAMIC 0.01MF/25V B
C1613	1-162-970-11	s	CAPACITOR CERAMIC 0.01MF/25V B
C1614	1-162-970-11	s	CAPACITOR CERAMIC 0.01MF/25V B
C1615 *2	1-127-692-11	s	CAP, CHIP CERAMIC 10MF B 3216
*1	1-131-603-11	s	CAP, POLYPYRROLE 100MF
C1616 *2	1-127-692-11	s	CAP, CHIP CERAMIC 10MF B 3216
C1617 *2	1-127-692-11	s	CAP, CHIP CERAMIC 10MF B 3216
C1618 *2	1-127-692-11	s	CAP, CHIP CERAMIC 10MF B 3216
C1619 *2	1-127-692-11	s	CAP, CHIP CERAMIC 10MF B 3216
C1620 *2	1-127-692-11	s	CAP, CHIP CERAMIC 10MF B 3216
C1621 *2	1-127-692-11	s	CAP, CHIP CERAMIC 10MF B 3216
C1622 *2	1-127-692-11	s	CAP, CHIP CERAMIC 10MF B 3216
C1623 *2	1-127-692-11	s	CAP, CHIP CERAMIC 10MF B 3216
C1624 *2	1-127-692-11	s	CAP, CHIP CERAMIC 10MF B 3216
C1625 *2	1-127-692-11	s	CAP, CHIP CERAMIC 10MF B 3216
C1626 *2	1-127-692-11	s	CAP, CHIP CERAMIC 10MF B 3216
C1627 *2	1-127-692-11	s	CAP, CHIP CERAMIC 10MF B 3216
C1628 *2	1-127-692-11	s	CAP, CHIP CERAMIC 10MF B 3216
C1629 *2	1-127-692-11	s	CAP, CHIP CERAMIC 10MF B 3216
C1630 *2	1-127-692-11	s	CAP, CHIP CERAMIC 10MF B 3216
C1631 *2	1-127-692-11	s	CAP, CHIP CERAMIC 10MF B 3216
CN900 *2	1-764-093-21	o	PIN, CONNECTOR (PC BOARD) 8P
*1	1-580-756-21	o	PIN, CONNECTOR 7P
D1000	8-719-066-98	s	DIODE RB051L-40
D1001	8-719-938-75	s	DIODE SB05-05CP (RECTI)
D1002	8-719-938-75	s	DIODE SB05-05CP (RECTI)

(HPR-1A BOARD for HDW PLAYER)

Ref. No. or Q'ty	Part No.	SP	Description
D1003	8-719-066-98	s	DIODE RB051L-40
E1000 *2	1-535-877-22	s	CHIP,CHECKER (TEST POINT)
E1001 *2	1-535-877-22	s	CHIP,CHECKER (TEST POINT)
E1002 *2	1-535-877-22	s	CHIP,CHECKER (TEST POINT)
E1003 *2	1-535-877-22	s	CHIP,CHECKER (TEST POINT)
E1004 *2	1-535-877-22	s	CHIP,CHECKER (TEST POINT)
E1005 *2	1-535-877-22	s	CHIP,CHECKER (TEST POINT)
E1006 *2	1-535-877-22	s	CHIP,CHECKER (TEST POINT)
E1007 *2	1-535-877-22	s	CHIP,CHECKER (TEST POINT)
F1000 ⚠	1-576-270-11	s	FUSE CHIP 4A/125V (6125)
F1001 ⚠	1-576-270-11	s	FUSE CHIP 4A/125V (6125)
F1002 ⚠	1-576-270-11	s	FUSE CHIP 4A/125V (6125)
FB1000	1-414-864-11	s	INDUCTOR, MICRO (CHIP TYPE)
FB1001	1-414-864-11	s	INDUCTOR, MICRO (CHIP TYPE)
FB1002	1-414-864-11	s	INDUCTOR, MICRO (CHIP TYPE)
IC500	8-759-712-31	s	IC SN65LVDT388DBTR
IC501	8-759-712-31	s	IC SN65LVDT388DBTR
IC502	8-759-712-31	s	IC SN65LVDT388DBTR
IC503 *2	8-759-592-47	s	IC TC7SZ08FU(TE85R)
IC508	6-700-804-01	s	IC SN74LVC574APWR
IC509	6-700-804-01	s	IC SN74LVC574APWR
IC510	6-700-804-01	s	IC SN74LVC574APWR
IC511 *2	8-759-549-15	s	IC SN74LV245APWR
*1	8-759-392-77	s	IC SN74LVC245APW (E20)
IC514 *2	8-759-549-15	s	IC SN74LV245APWR
*1	8-759-392-77	s	IC SN74LVC245APW (E20)
IC515	8-759-392-77	s	IC SN74LVC245APW (E20)
IC518 *2	8-759-549-15	s	IC SN74LV245APWR
IC601 *2	6-705-983-01	s	IC IS42S32200B-6TL-TR
*1	6-702-238-11	s	IC HY57V643220CT-7TR
IC602 *2	6-705-983-01	s	IC IS42S32200B-6TL-TR
*1	6-702-238-11	s	IC HY57V643220CT-7TR
IC707	6-702-238-11	s	IC HY57V643220CT-7TR
IC709	6-700-804-01	s	IC SN74LVC574APWR
IC722	6-700-804-01	s	IC SN74LVC574APWR
IC723	6-700-804-01	s	IC SN74LVC574APWR
IC803	6-700-804-01	s	IC SN74LVC574APWR
IC805	6-700-804-01	s	IC SN74LVC574APWR
IC808	8-759-712-32	s	IC SN65LVDS389DBTR
IC809	8-759-712-32	s	IC SN65LVDS389DBTR
IC810	8-759-712-32	s	IC SN65LVDS389DBTR
IC811	6-700-804-01	s	IC SN74LVC574APWR
IC900	8-759-549-15	s	IC SN74LV245APWR
IC901	8-759-549-15	s	IC SN74LV245APWR
IC902	8-759-549-15	s	IC SN74LV245APWR
IC903	8-759-549-15	s	IC SN74LV245APWR
IC904	8-759-549-15	s	IC SN74LV245APWR
IC905	8-759-549-15	s	IC SN74LV245APWR
IC906	8-759-549-15	s	IC SN74LV245APWR
IC907 *2	deleted		
*1	8-759-661-00	s	IC ISPLSI2192VE-100LT128
IC908	8-759-549-15	s	IC SN74LV245APWR
IC911	8-759-549-15	s	IC SN74LV245APWR
IC912 *2	8-759-497-44	s	IC TC7WH125FU(TE12R)
*1	8-759-327-60	s	IC TC7W125FU-TE12R
IC913	8-759-549-15	s	IC SN74LV245APWR
IC915	8-759-549-15	s	IC SN74LV245APWR
IC916	8-759-471-85	s	IC 74VHC00MTCX

(HPR-1A BOARD for HDW PLAYER)

Ref. No. or Q'ty	Part No.	SP	Description
IC919 *2	6-706-487-01	s	IC TC7SH08FU(T5RSOYJF)
*1	8-759-196-96	s	IC TC7SH08FU (TE85R)
IC920 *2	deleted		
*1	8-759-549-15	s	IC SN74LV245APWR
IC921 *2	deleted		
*1	8-759-549-15	s	IC SN74LV245APWR
IC922 *2	6-706-484-01	s	IC TC7SH04FU(T5RSOYJF)
*1	8-759-271-86	s	IC TC7SH04FU
IC923	8-759-549-15	s	IC SN74LV245APWR
IC1000	8-759-639-86	s	IC SN65LVDS32DR
IC1001	8-759-392-77	s	IC SN74LVC245APW (E20)
IC1002	8-759-392-77	s	IC SN74LVC245APW (E20)
IC1003	8-759-598-13	s	IC CDC2510CPWR
IC1004	8-759-598-13	s	IC CDC2510CPWR
IC1005	8-759-540-36	s	IC SN74LVC157APWR
IC1006	8-759-540-36	s	IC SN74LVC157APWR
IC1008*2	8-759-642-22	s	IC UPC29M05T-E2
*1	8-759-533-85	s	IC L88M05T-FA-TL
IC1009	8-759-597-57	s	IC LTC1628CG#TR
IC1010	8-759-598-13	s	IC CDC2510CPWR
IC1013	8-759-549-15	s	IC SN74LV245APWR
IC1014	8-759-549-15	s	IC SN74LV245APWR
IC1015	8-759-639-85	s	IC SN65LVDS31DR
IC1016*2	8-759-669-41	s	IC SN74LVC125APWR-12
L1000	1-414-441-11	s	INDUCTOR (POWER) 15UH
L1001 *2	1-419-630-11	s	COIL, CHOKE 4.7UH
*1	1-406-864-21	s	COIL,CHOKE 4.7UH
L1003 *2	1-419-630-11	s	COIL, CHOKE 4.7UH
*1	1-406-864-21	s	COIL,CHOKE 4.7UH
L1005 *2	1-419-630-11	s	COIL, CHOKE 4.7UH
*1	1-406-864-21	s	COIL,CHOKE 4.7UH
L1006 *2	1-419-630-11	s	COIL, CHOKE 4.7UH
*1	1-406-864-21	s	COIL,CHOKE 4.7UH
L1007 *2	1-419-630-11	s	COIL, CHOKE 4.7UH
*1	1-406-864-21	s	COIL,CHOKE 4.7UH
L1008	1-414-441-11	s	INDUCTOR (POWER) 15UH
L1009 *2	1-419-630-11	s	COIL, CHOKE 4.7UH
*1	1-406-864-21	s	COIL,CHOKE 4.7UH
Q570	8-729-928-19	s	TRANSISTOR 2SA1774R
Q571	8-729-047-32	s	TRANSISTOR SI4425DY-T1
Q1000	8-729-047-85	s	TRANSISTOR SI4416DY-T1
Q1001	8-729-047-85	s	TRANSISTOR SI4416DY-T1
Q1002	8-729-047-85	s	TRANSISTOR SI4416DY-T1
Q1003	8-729-047-85	s	TRANSISTOR SI4416DY-T1
Q1004	8-729-928-19	s	TRANSISTOR 2SA1774R
Q1005	8-729-928-19	s	TRANSISTOR 2SA1774R
Q1006	8-729-928-19	s	TRANSISTOR 2SA1774R
Q1007	8-729-928-81	s	TRANSISTOR DTC144EE
R524 *2	deleted		
*1	1-216-864-11	s	CONDUCTOR, CHIP (1608)
R525 *2	1-216-864-11	s	CONDUCTOR, CHIP (1608)
R528	1-216-864-11	s	CONDUCTOR, CHIP (1608)
R550	1-216-864-11	s	CONDUCTOR, CHIP (1608)
R551	1-216-864-11	s	CONDUCTOR, CHIP (1608)
R552	1-216-864-11	s	CONDUCTOR, CHIP (1608)
R553	1-216-864-11	s	CONDUCTOR, CHIP (1608)
R554	1-216-864-11	s	CONDUCTOR, CHIP (1608)
R555	1-216-864-11	s	CONDUCTOR, CHIP (1608)
R556	1-216-864-11	s	CONDUCTOR, CHIP (1608)
R557	1-216-864-11	s	CONDUCTOR, CHIP (1608)

(HPR-1A BOARD for HDW PLAYER)

Ref. No. or Q'ty	Part No.	SP	Description
R558	1-211-985-11	s	RESISTOR,CHIP 47 1/10W (1608)
R559	1-211-985-11	s	RESISTOR,CHIP 47 1/10W (1608)
R560	1-218-871-11	s	RESISTOR,CHIP 10K 1/10W (1608)
R561	1-218-871-11	s	RESISTOR,CHIP 10K 1/10W (1608)
R562	1-216-864-11	s	CONDUCTOR, CHIP (1608)
R570	1-218-847-11	s	RESISTOR, CHIP 1K 1/10W (1608)
R571	1-218-847-11	s	RESISTOR, CHIP 1K 1/10W (1608)
R572	1-218-835-11	s	RESISTOR,CHIP 330 1/10W (1608)
R573	1-218-835-11	s	RESISTOR,CHIP 330 1/10W (1608)
R600	1-216-864-11	s	CONDUCTOR, CHIP (1608)
R601	1-216-864-11	s	CONDUCTOR, CHIP (1608)
R602	1-216-864-11	s	CONDUCTOR, CHIP (1608)
R603	1-216-864-11	s	CONDUCTOR, CHIP (1608)
R604	1-216-864-11	s	CONDUCTOR, CHIP (1608)
R606	1-211-977-11	s	RESISTOR,CHIP 22 1/10W (1608)
R607	1-211-977-11	s	RESISTOR,CHIP 22 1/10W (1608)
R608	1-211-977-11	s	RESISTOR,CHIP 22 1/10W (1608)
R613	1-216-864-11	s	CONDUCTOR, CHIP (1608)
R616	1-211-977-11	s	RESISTOR,CHIP 22 1/10W (1608)
R617	1-211-977-11	s	RESISTOR,CHIP 22 1/10W (1608)
R618	1-211-977-11	s	RESISTOR,CHIP 22 1/10W (1608)
R620	1-216-864-11	s	CONDUCTOR, CHIP (1608)
R621	1-216-864-11	s	CONDUCTOR, CHIP (1608)
R622	1-216-864-11	s	CONDUCTOR, CHIP (1608)
R623	1-216-864-11	s	CONDUCTOR, CHIP (1608)
R624	1-216-864-11	s	CONDUCTOR, CHIP (1608)
R628	1-216-864-11	s	CONDUCTOR, CHIP (1608)
R638	1-216-864-11	s	CONDUCTOR, CHIP (1608)
R639	1-216-864-11	s	CONDUCTOR, CHIP (1608)
R640	1-216-864-11	s	CONDUCTOR, CHIP (1608)
R642	1-216-864-11	s	CONDUCTOR, CHIP (1608)
R700	1-218-873-11	s	RESISTOR,CHIP 12K 1/10W (1608)
R701	1-218-871-11	s	RESISTOR,CHIP 10K 1/10W (1608)
R702	1-218-831-11	s	RESISTOR, CHIP 220 1/10W(1608)
R703	1-218-831-11	s	RESISTOR, CHIP 220 1/10W(1608)
R704	1-211-977-11	s	RESISTOR,CHIP 22 1/10W (1608)
R707	1-211-977-11	s	RESISTOR,CHIP 22 1/10W (1608)
R710	1-218-863-11	s	RESISTOR,CHIP 4.7K 1/10W(1608)
R858	1-218-895-11	s	RESISTOR,CHIP 100K 1/10W(1608)
R859	1-218-895-11	s	RESISTOR,CHIP 100K 1/10W(1608)
R860	1-218-895-11	s	RESISTOR,CHIP 100K 1/10W(1608)
R861	1-218-895-11	s	RESISTOR,CHIP 100K 1/10W(1608)
R900	1-216-864-11	s	CONDUCTOR, CHIP (1608)
R901	1-218-823-11	s	RESISTOR,CHIP 100 1/10W (1608)
R902 *2	1-218-847-11	s	RESISTOR, CHIP 1K 1/10W (1608)
R903 *2	1-218-847-11	s	RESISTOR, CHIP 1K 1/10W (1608)
R904	1-216-864-11	s	CONDUCTOR, CHIP (1608)
R905 *2	1-218-847-11	s	RESISTOR, CHIP 1K 1/10W (1608)
R906	1-211-985-11	s	RESISTOR,CHIP 47 1/10W (1608)
R907	1-211-985-11	s	RESISTOR,CHIP 47 1/10W (1608)
R908	1-211-985-11	s	RESISTOR,CHIP 47 1/10W (1608)
R909	1-211-985-11	s	RESISTOR,CHIP 47 1/10W (1608)
R910	1-211-985-11	s	RESISTOR,CHIP 47 1/10W (1608)
R911	1-211-985-11	s	RESISTOR,CHIP 47 1/10W (1608)
R912	1-211-985-11	s	RESISTOR,CHIP 47 1/10W (1608)
R913	1-211-985-11	s	RESISTOR,CHIP 47 1/10W (1608)
R914	1-216-864-11	s	CONDUCTOR, CHIP (1608)
R915	1-211-985-11	s	RESISTOR,CHIP 47 1/10W (1608)
R916 *2	1-218-847-11	s	RESISTOR, CHIP 1K 1/10W (1608)

(HPR-1A BOARD for HDW PLAYER)

Ref. No. or Q'ty	Part No.	SP	Description
R918	1-211-985-11	s	RESISTOR,CHIP 47 1/10W (1608)
R920	1-211-985-11	s	RESISTOR,CHIP 47 1/10W (1608)
R924	1-211-985-11	s	RESISTOR,CHIP 47 1/10W (1608)
R925	1-211-985-11	s	RESISTOR,CHIP 47 1/10W (1608)
R926	1-211-985-11	s	RESISTOR,CHIP 47 1/10W (1608)
R927	1-211-985-11	s	RESISTOR,CHIP 47 1/10W (1608)
R928	1-211-985-11	s	RESISTOR,CHIP 47 1/10W (1608)
R929	1-211-985-11	s	RESISTOR,CHIP 47 1/10W (1608)
R930	1-211-985-11	s	RESISTOR,CHIP 47 1/10W (1608)
R931	1-211-985-11	s	RESISTOR,CHIP 47 1/10W (1608)
R932	1-218-863-11	s	RESISTOR,CHIP 4.7K 1/10W(1608)
R933	1-218-863-11	s	RESISTOR,CHIP 4.7K 1/10W(1608)
R934	1-218-895-11	s	RESISTOR,CHIP 100K 1/10W(1608)
R935	1-218-895-11	s	RESISTOR,CHIP 100K 1/10W(1608)
R936	1-218-895-11	s	RESISTOR,CHIP 100K 1/10W(1608)
R938	1-211-985-11	s	RESISTOR,CHIP 47 1/10W (1608)
R943	1-211-985-11	s	RESISTOR,CHIP 47 1/10W (1608)
R944	1-211-985-11	s	RESISTOR,CHIP 47 1/10W (1608)
R951	1-218-895-11	s	RESISTOR,CHIP 100K 1/10W(1608)
R952	1-218-895-11	s	RESISTOR,CHIP 100K 1/10W(1608)
R953	1-211-985-11	s	RESISTOR,CHIP 47 1/10W (1608)
R954	1-211-985-11	s	RESISTOR,CHIP 47 1/10W (1608)
R955	1-211-985-11	s	RESISTOR,CHIP 47 1/10W (1608)
R956	1-218-895-11	s	RESISTOR,CHIP 100K 1/10W(1608)
R960	1-216-864-11	s	CONDUCTOR, CHIP (1608)
R962 *2	1-216-864-11	s	CONDUCTOR, CHIP (1608)
R965 *2	deleted		
*1	1-216-864-11	s	CONDUCTOR, CHIP (1608)
R967 *2	deleted		
*1	1-211-985-11	s	RESISTOR,CHIP 47 1/10W (1608)
R968	1-211-985-11	s	RESISTOR,CHIP 47 1/10W (1608)
R969	1-211-985-11	s	RESISTOR,CHIP 47 1/10W (1608)
R970	1-211-985-11	s	RESISTOR,CHIP 47 1/10W (1608)
R971	1-211-985-11	s	RESISTOR,CHIP 47 1/10W (1608)
R972	1-211-985-11	s	RESISTOR,CHIP 47 1/10W (1608)
R973	1-211-985-11	s	RESISTOR,CHIP 47 1/10W (1608)
R974	1-211-985-11	s	RESISTOR,CHIP 47 1/10W (1608)
R975	1-211-985-11	s	RESISTOR,CHIP 47 1/10W (1608)
R976	1-211-985-11	s	RESISTOR,CHIP 47 1/10W (1608)
R977	1-211-985-11	s	RESISTOR,CHIP 47 1/10W (1608)
R978	1-211-985-11	s	RESISTOR,CHIP 47 1/10W (1608)
R979 *2	deleted		
*1	1-216-864-11	s	CONDUCTOR, CHIP (1608)
R980	1-211-985-11	s	RESISTOR,CHIP 47 1/10W (1608)
R981	1-211-985-11	s	RESISTOR,CHIP 47 1/10W (1608)
R982	1-211-985-11	s	RESISTOR,CHIP 47 1/10W (1608)
R983	1-211-985-11	s	RESISTOR,CHIP 47 1/10W (1608)
R984	1-211-985-11	s	RESISTOR,CHIP 47 1/10W (1608)
R985	1-211-985-11	s	RESISTOR,CHIP 47 1/10W (1608)
R986	1-211-985-11	s	RESISTOR,CHIP 47 1/10W (1608)
R987	1-218-895-11	s	RESISTOR,CHIP 100K 1/10W(1608)
R989	1-218-895-11	s	RESISTOR,CHIP 100K 1/10W(1608)
R990	1-218-895-11	s	RESISTOR,CHIP 100K 1/10W(1608)
R991	1-218-895-11	s	RESISTOR,CHIP 100K 1/10W(1608)
R992	1-216-864-11	s	CONDUCTOR, CHIP (1608)
R993	1-211-985-11	s	RESISTOR,CHIP 47 1/10W (1608)
R994 *2	deleted		
*1	1-211-985-11	s	RESISTOR,CHIP 47 1/10W (1608)
R995 *2	deleted		
*1	1-211-985-11	s	RESISTOR,CHIP 47 1/10W (1608)

(HPR-1A BOARD for HDW PLAYER)

Ref. No. or Q'ty	Part No.	SP	Description
R996 *2	deleted		
*1	1-218-895-11	s	RESISTOR,CHIP 100K 1/10W(1608)
R997	1-216-864-11	s	CONDUCTOR, CHIP (1608)
R998 *2	deleted		
*1	1-211-985-11	s	RESISTOR,CHIP 47 1/10W (1608)
R999	1-218-895-11	s	RESISTOR,CHIP 100K 1/10W(1608)
R1000	1-218-823-11	s	RESISTOR,CHIP 100 1/10W (1608)
R1001	1-218-823-11	s	RESISTOR,CHIP 100 1/10W (1608)
R1002	1-218-823-11	s	RESISTOR,CHIP 100 1/10W (1608)
R1003	1-218-823-11	s	RESISTOR,CHIP 100 1/10W (1608)
R1004	1-211-985-11	s	RESISTOR,CHIP 47 1/10W (1608)
R1005	1-211-985-11	s	RESISTOR,CHIP 47 1/10W (1608)
R1006	1-211-985-11	s	RESISTOR,CHIP 47 1/10W (1608)
R1008	1-211-985-11	s	RESISTOR,CHIP 47 1/10W (1608)
R1009	1-211-985-11	s	RESISTOR,CHIP 47 1/10W (1608)
R1010	1-211-985-11	s	RESISTOR,CHIP 47 1/10W (1608)
R1011	1-211-985-11	s	RESISTOR,CHIP 47 1/10W (1608)
R1012	1-211-985-11	s	RESISTOR,CHIP 47 1/10W (1608)
R1013	1-211-985-11	s	RESISTOR,CHIP 47 1/10W (1608)
R1015	1-218-847-11	s	RESISTOR, CHIP 1K 1/10W (1608)
R1016	1-218-847-11	s	RESISTOR, CHIP 1K 1/10W (1608)
R1017	1-218-847-11	s	RESISTOR, CHIP 1K 1/10W (1608)
R1018	1-218-847-11	s	RESISTOR, CHIP 1K 1/10W (1608)
R1019	1-211-977-11	s	RESISTOR,CHIP 22 1/10W (1608)
R1020	1-211-977-11	s	RESISTOR,CHIP 22 1/10W (1608)
R1021	1-211-977-11	s	RESISTOR,CHIP 22 1/10W (1608)
R1022	1-211-977-11	s	RESISTOR,CHIP 22 1/10W (1608)
R1023	1-211-977-11	s	RESISTOR,CHIP 22 1/10W (1608)
R1024	1-211-977-11	s	RESISTOR,CHIP 22 1/10W (1608)
R1025	1-211-977-11	s	RESISTOR,CHIP 22 1/10W (1608)
R1028	1-211-977-11	s	RESISTOR,CHIP 22 1/10W (1608)
R1029	1-211-977-11	s	RESISTOR,CHIP 22 1/10W (1608)
R1030	1-211-977-11	s	RESISTOR,CHIP 22 1/10W (1608)
R1031	1-211-977-11	s	RESISTOR,CHIP 22 1/10W (1608)
R1032	1-211-977-11	s	RESISTOR,CHIP 22 1/10W (1608)
R1033	1-211-977-11	s	RESISTOR,CHIP 22 1/10W (1608)
R1034	1-211-977-11	s	RESISTOR,CHIP 22 1/10W (1608)
R1035	1-211-977-11	s	RESISTOR,CHIP 22 1/10W (1608)
R1036	1-211-977-11	s	RESISTOR,CHIP 22 1/10W (1608)
R1037	1-211-985-11	s	RESISTOR,CHIP 47 1/10W (1608)
R1038	1-211-985-11	s	RESISTOR,CHIP 47 1/10W (1608)
R1039	1-211-985-11	s	RESISTOR,CHIP 47 1/10W (1608)
R1049	1-218-847-11	s	RESISTOR, CHIP 1K 1/10W (1608)
R1050	1-218-847-11	s	RESISTOR, CHIP 1K 1/10W (1608)
R1051	1-211-977-11	s	RESISTOR,CHIP 22 1/10W (1608)
R1052	1-211-977-11	s	RESISTOR,CHIP 22 1/10W (1608)
R1053	1-211-977-11	s	RESISTOR,CHIP 22 1/10W (1608)
R1054	1-211-977-11	s	RESISTOR,CHIP 22 1/10W (1608)
R1055	1-211-977-11	s	RESISTOR,CHIP 22 1/10W (1608)
R1056	1-211-977-11	s	RESISTOR,CHIP 22 1/10W (1608)
R1057	1-211-977-11	s	RESISTOR,CHIP 22 1/10W (1608)
R1058	1-211-977-11	s	RESISTOR,CHIP 22 1/10W (1608)
R1059	1-211-977-11	s	RESISTOR,CHIP 22 1/10W (1608)
R1060	1-211-977-11	s	RESISTOR,CHIP 22 1/10W (1608)
R1061	1-219-610-11	s	RESISTOR, (SQUARE TYPE) 0.022
R1062	1-211-977-11	s	RESISTOR,CHIP 22 1/10W (1608)
R1063	1-211-977-11	s	RESISTOR,CHIP 22 1/10W (1608)
R1064	1-218-883-11	s	RESISTOR,CHIP 33K 1/10W (1608)
R1065	1-218-879-11	s	RESISTOR,CHIP 22K 1/10W (1608)

(HPR-1A BOARD for HDW PLAYER)

Ref. No. or Q'ty	Part No.	SP	Description
R1066	1-218-863-11	s	RESISTOR,CHIP 4.7K 1/10W(1608)
R1069	1-218-823-11	s	RESISTOR,CHIP 100 1/10W (1608)
R1071	1-218-863-11	s	RESISTOR,CHIP 4.7K 1/10W(1608)
R1072	1-218-873-11	s	RESISTOR,CHIP 12K 1/10W (1608)
R1073	1-218-871-11	s	RESISTOR,CHIP 10K 1/10W (1608)
R1074	1-211-977-11	s	RESISTOR,CHIP 22 1/10W (1608)
R1075	1-211-977-11	s	RESISTOR,CHIP 22 1/10W (1608)
R1076	1-219-610-11	s	RESISTOR, (SQUARE TYPE) 0.022
R1080	1-211-977-11	s	RESISTOR,CHIP 22 1/10W (1608)
R1081	1-211-977-11	s	RESISTOR,CHIP 22 1/10W (1608)
R1082	1-216-864-11	s	CONDUCTOR, CHIP (1608)
R1089	1-218-863-11	s	RESISTOR,CHIP 4.7K 1/10W(1608)
R1090	1-218-863-11	s	RESISTOR,CHIP 4.7K 1/10W(1608)
R1091	1-218-863-11	s	RESISTOR,CHIP 4.7K 1/10W(1608)
R1092	1-218-863-11	s	RESISTOR,CHIP 4.7K 1/10W(1608)
R1093	1-218-863-11	s	RESISTOR,CHIP 4.7K 1/10W(1608)
R1094	1-218-863-11	s	RESISTOR,CHIP 4.7K 1/10W(1608)
R1095	1-218-887-11	s	RESISTOR,CHIP 47K 1/10W (1608)
RB500	1-239-409-11	s	RESISTOR NETWORK 47 (1608)
RB501	1-239-409-11	s	RESISTOR NETWORK 47 (1608)
RB502	1-239-409-11	s	RESISTOR NETWORK 47 (1608)
RB503	1-239-409-11	s	RESISTOR NETWORK 47 (1608)
RB504 *2	1-233-575-11	s	RES, CHIP NETWORK 22
RB505 *2	1-233-575-11	s	RES, CHIP NETWORK 22
RB506	1-239-409-11	s	RESISTOR NETWORK 47 (1608)
RB507	1-239-409-11	s	RESISTOR NETWORK 47 (1608)
RB508	1-239-409-11	s	RESISTOR NETWORK 47 (1608)
RB509	1-239-409-11	s	RESISTOR NETWORK 47 (1608)
RB510	1-239-409-11	s	RESISTOR NETWORK 47 (1608)
RB511	1-239-409-11	s	RESISTOR NETWORK 47 (1608)
RB512	1-239-409-11	s	RESISTOR NETWORK 47 (1608)
RB513	1-239-409-11	s	RESISTOR NETWORK 47 (1608)
RB514	1-239-409-11	s	RESISTOR NETWORK 47 (1608)
RB515	1-239-409-11	s	RESISTOR NETWORK 47 (1608)
RB516	1-239-409-11	s	RESISTOR NETWORK 47 (1608)
RB517	1-239-409-11	s	RESISTOR NETWORK 47 (1608)
RB518	1-233-412-11	s	RESISTOR,CHIP NETWORK 1K
RB519	1-233-412-11	s	RESISTOR,CHIP NETWORK 1K
RB520	1-233-810-21	s	RES, NETWORK 100K (3216)
RB521 *2	1-233-575-11	s	RES, CHIP NETWORK 22
RB522 *2	1-233-575-11	s	RES, CHIP NETWORK 22
RB523 *2	1-233-575-11	s	RES, CHIP NETWORK 22
RB524 *2	1-233-575-11	s	RES, CHIP NETWORK 22
RB600	1-233-575-11	s	RES, CHIP NETWORK 22
RB601	1-233-575-11	s	RES, CHIP NETWORK 22
RB607	1-233-575-11	s	RES, CHIP NETWORK 22
RB608	1-233-575-11	s	RES, CHIP NETWORK 22
RB704	1-233-575-11	s	RES, CHIP NETWORK 22
RB705	1-233-575-11	s	RES, CHIP NETWORK 22
RB706	1-233-575-11	s	RES, CHIP NETWORK 22
RB707	1-233-575-11	s	RES, CHIP NETWORK 22
RB850	1-233-575-11	s	RES, CHIP NETWORK 22
RB851	1-233-575-11	s	RES, CHIP NETWORK 22
RB852	1-233-575-11	s	RES, CHIP NETWORK 22
RB853	1-233-575-11	s	RES, CHIP NETWORK 22
RB854	1-233-575-11	s	RES, CHIP NETWORK 22
RB855	1-233-575-11	s	RES, CHIP NETWORK 22
RB900	1-233-810-21	s	RES, NETWORK 100K (3216)

(HPR-1A BOARD for HDW PLAYER)

Ref. No. or Q'ty	Part No.	SP	Description
RB901	1-233-810-21	s	RES, NETWORK 100K (3216)
RB902	1-233-810-21	s	RES, NETWORK 100K (3216)
RB903	1-233-810-21	s	RES, NETWORK 100K (3216)
RB904	1-233-810-21	s	RES, NETWORK 100K (3216)
RB905	1-233-810-21	s	RES, NETWORK 100K (3216)
RB906	1-233-810-21	s	RES, NETWORK 100K (3216)
RB907	1-233-810-21	s	RES, NETWORK 100K (3216)
RB908	1-239-409-11	s	RESISTOR NETWORK 47 (1608)
RB909	1-239-409-11	s	RESISTOR NETWORK 47 (1608)
RB910	1-239-409-11	s	RESISTOR NETWORK 47 (1608)
RB911	1-239-409-11	s	RESISTOR NETWORK 47 (1608)
RB912	1-239-409-11	s	RESISTOR NETWORK 47 (1608)
RB913	1-239-409-11	s	RESISTOR NETWORK 47 (1608)
RB914	1-239-409-11	s	RESISTOR NETWORK 47 (1608)
RB915	1-233-810-21	s	RES, NETWORK 100K (3216)
RB916	1-233-810-21	s	RES, NETWORK 100K (3216)
RB917	1-233-810-21	s	RES, NETWORK 100K (3216)
RB918	1-233-414-11	s	RESISTOR,CHIP NETWORK 4.7K
RB919	1-233-414-11	s	RESISTOR,CHIP NETWORK 4.7K
RB920	1-233-414-11	s	RESISTOR,CHIP NETWORK 4.7K
RB921	1-239-409-11	s	RESISTOR NETWORK 47 (1608)
RB922	1-239-409-11	s	RESISTOR NETWORK 47 (1608)
RB923	1-239-409-11	s	RESISTOR NETWORK 47 (1608)
RB924	1-233-414-11	s	RESISTOR,CHIP NETWORK 4.7K
RB925	1-239-409-11	s	RESISTOR NETWORK 47 (1608)
RB926 *2	deleted		
*1	1-233-810-21	s	RES, NETWORK 100K (3216)
RB927 *2	deleted		
*1	1-239-409-11	s	RESISTOR NETWORK 47 (1608)
RB928	1-233-810-21	s	RES, NETWORK 100K (3216)
RB929	1-233-810-21	s	RES, NETWORK 100K (3216)
RB930	1-233-810-21	s	RES, NETWORK 100K (3216)
RB934 *2	deleted		
*1	1-236-907-11	s	RESISTOR BLOCK 100K (1608)
RB1000	1-233-412-11	s	RESISTOR,CHIP NETWORK 1K
RB1001	1-233-411-11	s	RESISTOR,CHIP NETWORK 220/3216
RB1002	1-233-412-11	s	RESISTOR,CHIP NETWORK 1K
RB1003	1-233-411-11	s	RESISTOR,CHIP NETWORK 220/3216
RB1004	1-233-411-11	s	RESISTOR,CHIP NETWORK 220/3216
RB1005	1-233-411-11	s	RESISTOR,CHIP NETWORK 220/3216
RB1006	1-233-412-11	s	RESISTOR,CHIP NETWORK 1K
RB1007	1-233-412-11	s	RESISTOR,CHIP NETWORK 1K
RB1008	1-239-409-11	s	RESISTOR NETWORK 47 (1608)
RB1009	1-233-412-11	s	RESISTOR,CHIP NETWORK 1K
S900	1-692-270-41	s	SWITCH, SLIDE
TP602	1-535-877-22	s	CHIP,CHECKER (TEST POINT)
TP605	1-535-877-22	s	CHIP,CHECKER (TEST POINT)
TP606	1-535-877-22	s	CHIP,CHECKER (TEST POINT)
TP607	1-535-877-22	s	CHIP,CHECKER (TEST POINT)
TP1008	1-535-877-22	s	CHIP,CHECKER (TEST POINT)
TP1009	1-535-877-22	s	CHIP,CHECKER (TEST POINT)
TP1010	1-535-877-22	s	CHIP,CHECKER (TEST POINT)

IF-885 BOARD for MSW-M2000E/P, M2100E/P, BKMW-E2000/E3000

Ref. No. or Q'ty	Part No.	SP	Description
CN1	1-817-290-11	s	JACK, MODULAR (WITH LED)
CN2	1-817-291-11	s	JACK, MODULAR
CN3	1-580-056-21	o	PIN,CONNECTOR 3P
R1	1-216-815-11	s	RESISTOR,CHIP 330 1/10W 1608
R2	1-216-815-11	s	RESISTOR,CHIP 330 1/10W 1608

IF-886 BOARD for MSW-M2000E/P, M2100E/P, BKMW-E2000/E3000

Ref. No. or Q'ty	Part No.	SP	Description
1pc	A-8345-971-A	s	MOUNTED CIRCUIT BOARD, IF-886
C1	1-107-826-11	s	CAPACITOR,CHIP CERAMIC 0.1MF
C2	1-107-826-11	s	CAPACITOR,CHIP CERAMIC 0.1MF
C3	1-107-826-11	s	CAPACITOR,CHIP CERAMIC 0.1MF
C4	1-107-826-11	s	CAPACITOR,CHIP CERAMIC 0.1MF
C5	1-107-826-11	s	CAPACITOR,CHIP CERAMIC 0.1MF
C6	1-107-826-11	s	CAPACITOR,CHIP CERAMIC 0.1MF
C7	1-107-826-11	s	CAPACITOR,CHIP CERAMIC 0.1MF
C8	1-107-826-11	s	CAPACITOR,CHIP CERAMIC 0.1MF
CN2	1-566-567-11	o	CONNECTOR 60P
IC1	8-759-524-27	s	IC TC74VHC244FT(EL)
IC2	8-759-524-27	s	IC TC74VHC244FT(EL)
IC3	8-759-712-32	s	IC SN65LVDS389DBTR
IC4	8-759-712-31	s	IC SN65LVDT388DBTR
IC5	8-759-712-32	s	IC SN65LVDS389DBTR
IC6	8-759-712-32	s	IC SN65LVDS389DBTR
IC7	8-759-712-31	s	IC SN65LVDT388DBTR
IC8	8-759-712-31	s	IC SN65LVDT388DBTR
L1	1-412-923-21	s	INDUCTOR CHIP 0.047UH (2520)
L2	1-412-923-21	s	INDUCTOR CHIP 0.047UH (2520)
L3	1-412-923-21	s	INDUCTOR CHIP 0.047UH (2520)
R1	1-216-833-11	s	RESISTOR,CHIP 10K 1/10W (1608)
R2	1-216-797-11	s	RESISTOR,CHIP 10 1/10W 1608
RB1	1-233-575-11	s	RES, CHIP NETWORK 22
RB2	1-233-575-11	s	RES, CHIP NETWORK 22
RB3	1-233-575-11	s	RES, CHIP NETWORK 22
RB4	1-233-412-11	s	RESISTOR,CHIP NETWORK 1K
RB5	1-233-412-11	s	RESISTOR,CHIP NETWORK 1K
RB6	1-233-412-11	s	RESISTOR,CHIP NETWORK 1K
RB7	1-233-575-11	s	RES, CHIP NETWORK 22
RB8	1-233-575-11	s	RES, CHIP NETWORK 22
RB9	1-233-575-11	s	RES, CHIP NETWORK 22
RB10	1-233-575-11	s	RES, CHIP NETWORK 22
RB11	1-233-575-11	s	RES, CHIP NETWORK 22

KY-464 (MBJ834) BOARD

*HR, *R: HDW-2000, M2000/P
*HP : HDW-M2100/P, A2100
*MR, *R: MSW-2000, M2000/P, A2000/P
*MP : MSW-M2100/P

Ref. No. or Q'ty	Part No.	SP	Description
1pc *HR	9-885-020-34	s	MOUNTED CIRCUIT BOARD, KY-464
*HP	9-885-020-35	s	MOUNTED CIRCUIT BOARD, KY-464
*MR	9-885-020-33	s	MOUNTED CIRCUIT BOARD, KY-464
*MP	9-885-020-36	s	MOUNTED CIRCUIT BOARD, KY-464
1pc	3-204-579-01	o	FRAME (CN)
CN1	1-794-493-11	s	CONNECTOR, BB 40P (RECEPTACLE)
CN10	1-794-229-11	o	CONNECTOR, ROUND TYPE (RECEPTA
F1	⚠ 9-885-011-13	s	FUSE
F2	⚠ 9-885-029-44	s	FUSE
F3	⚠ 9-885-029-44	s	FUSE
F4	⚠ 9-885-011-13	s	FUSE
SW1	1-762-042-11	o	SWITCH, TACTILE (ILLUMINATED)
SW2	1-692-890-11	o	SWITCH, TACTILE
SW3	1-692-890-21	o	SWITCH, TACTILE (WITH LIGHT)
SW4	1-692-890-31	o	SWITCH, TACTILE (WITH LIGHT)
SW5	1-692-890-41	o	SWITCH, TACTILE (WITH LIGHT)
SW6	1-692-892-21	o	SWITCH, TACTILE (WITH LIGHT)
SW7 *R	1-786-003-11	s	SWITCH, TACTILE
SW8 *R	1-786-003-11	s	SWITCH, TACTILE
SW9	1-786-004-11	s	SWITCH, TACTILE
SW10	1-786-005-11	s	SWITCH, TACTILE
SW11	1-786-006-11	s	SWITCH, TACTILE
SW12	1-762-042-11	o	SWITCH, TACTILE (ILLUMINATED)
SW13	1-692-890-11	o	SWITCH, TACTILE
SW14 *R	1-692-891-21	o	SWITCH, TACTILE (WITH LIGHT)
SW15	1-552-539-11	s	SWITCH,KEY BOARD
SW16	1-762-042-11	o	SWITCH, TACTILE (ILLUMINATED)
SW17	1-762-042-11	o	SWITCH, TACTILE (ILLUMINATED)
SW18	1-762-042-11	o	SWITCH, TACTILE (ILLUMINATED)
SW19	1-786-011-11	o	SWITCH, TACTILE (ILLUMINATED)
SW20	1-786-010-11	o	SWITCH, TACTILE (ILLUMINATED)
SW21	1-786-011-11	o	SWITCH, TACTILE (ILLUMINATED)
SW22	1-786-010-11	o	SWITCH, TACTILE (ILLUMINATED)
SW23	1-762-042-11	o	SWITCH, TACTILE (ILLUMINATED)
SW24	1-762-042-11	o	SWITCH, TACTILE (ILLUMINATED)
SW25	1-692-994-11	o	SWITCH, TACTILE (ILLUMINATED)
SW26 *R	1-762-132-11	o	SWITCH, TACTILE (ILLUMINATED)
SW27	1-692-994-11	o	SWITCH, TACTILE (ILLUMINATED)
U4	1-476-345-11	o	ENCODER, ROTARY

KY-465 (AC013AA) BOARD

---

*HR: HDW-2000, M2000/P
*HP: HDW-M2100/P, A2100
*MR: MSW-2000, M2000/P, A2000/P
*MP: MSW-M2100/P

Ref. No. or Q'ty	Part No.	SP	Description
1pc *HR	9-885-012-33	o	MOUNTED CIRCUIT BOARD, KY-465
*HP	9-885-012-36	o	MOUNTED CIRCUIT BOARD, KY-465
*MR	9-885-011-08	o	MOUNTED CIRCUIT BOARD, KY-465
*MP	9-885-012-38	o	MOUNTED CIRCUIT BOARD, KY-465
CN7	1-794-494-11	s	CONECTOR, BB 40P (PLUG)

KY-569 (MBJ907B) BOARD

---

*HR, *R: HDW-2000, D2000, M2000/P, S2000/P
DVW-2000/P, M2000/P
*HP : HDW-M2100/P, A2100
*MR, *R: MSW-2000, M2000/P, M2000E/P, A2000/P
*MP : MSW-M2100/P, M2100E/P

Ref. No. or Q'ty	Part No.	SP	Description
1pc *HR	9-885-061-80	s	MOUNTED CIRCUIT BOARD, KY-569
*HP	9-885-065-13	o	MOUNTED CIRCUIT BOARD, KY-569
*MR	9-885-065-12	o	MOUNTED CIRCUIT BOARD, KY-569
*MP	9-885-065-14	o	MOUNTED CIRCUIT BOARD, KY-569
CN10	1-794-229-11	o	CONNECTOR, ROUND TYPE (RECEPTACLE)
F1	⚠ 9-885-061-92	s	FUSE
F2	⚠ 9-885-029-44	s	FUSE
F3	⚠ 9-885-029-44	s	FUSE
F4	⚠ 9-885-061-93	s	FUSE
SW1	1-762-042-11	s	SWITCH, TACTILE (ILLUMINATED)
SW2	1-692-890-11	s	SWITCH, TACTILE
SW3	1-692-890-21	s	SWITCH, TACTILE (WITH LIGHT)
SW4	1-692-890-31	s	SWITCH, TACTILE (WITH LIGHT)
SW5	1-692-890-41	s	SWITCH, TACTILE (WITH LIGHT)
SW6	1-692-892-21	s	SWITCH, TACTILE (WITH LIGHT)
SW7 *R	1-786-003-11	s	SWITCH, TACTILE
SW8 *R	1-786-003-11	s	SWITCH, TACTILE
SW9	1-786-004-12	s	SWITCH, TACTILE
SW10	1-786-005-12	s	SWITCH, TACTILE
SW11	1-786-006-12	s	SWITCH, TACTILE
SW12	1-762-042-11	s	SWITCH, TACTILE (ILLUMINATED)
SW13	1-692-890-11	s	SWITCH, TACTILE
SW14 *R	1-692-891-21	s	SWITCH, TACTILE (WITH LIGHT)
SW15	1-552-539-00	s	SWITCH,KEY BOARD
SW16	1-762-042-11	s	SWITCH, TACTILE (ILLUMINATED)
SW17	1-762-042-11	s	SWITCH, TACTILE (ILLUMINATED)
SW18	1-762-042-11	s	SWITCH, TACTILE (ILLUMINATED)
SW19	1-786-011-11	o	SWITCH, TACTILE (ILLUMINATION)
SW20	1-786-010-11	o	SWITCH, TACTILE (ILLUMINATION)
SW21	1-786-011-11	o	SWITCH, TACTILE (ILLUMINATION)
SW22	1-786-010-11	o	SWITCH, TACTILE (ILLUMINATION)
SW23	1-762-042-11	s	SWITCH, TACTILE (ILLUMINATED)
SW24	1-762-042-11	s	SWITCH, TACTILE (ILLUMINATED)
SW25	1-692-994-11	s	SWITCH, TACTILE (ILLUMINATED)
SW26 *R	1-762-132-11	s	SWITCH, TACTILE (ILLUMINATED)
SW27	1-692-994-11	s	SWITCH, TACTILE (ILLUMINATED)
U4	1-476-345-11	o	ENCODER, ROTARY

KY-570 (AC027A) BOARD
---

*HR: HDW-2000, D2000, M2000/P, S2000/P
DVW-2000/P, M2000/P
*HP: HDW-M2100/P, A2100
*MR: MSW-2000, M2000/P, M2000E/P, A2000/P
*MP: MSW-M2100/P, M2100E/P

Ref. No. or Q'ty	Part No.	SP	Description
1pc	*HR 9-885-061-84	s	MOUNTED CIRCUIT BOARD, KY-570
	*HP 9-885-065-16	o	MOUNTED CIRCUIT BOARD, KY-570
	*MR 9-885-065-15	o	MOUNTED CIRCUIT BOARD, KY-570
	*MP 9-885-065-17	o	MOUNTED CIRCUIT BOARD, KY-570

LED-357 BOARD

Ref. No. or Q'ty	Part No.	SP	Description
1pc	A-8325-257-A	o	MOUNTED CIRCUIT BOARD, LED-357
C1	1-164-156-11	s	CAPACITOR,CERAMIC 0.1MF/25V F
C2	1-164-156-11	s	CAPACITOR,CERAMIC 0.1MF/25V F
C3	1-164-156-11	s	CAPACITOR,CERAMIC 0.1MF/25V F
CN1	1-760-388-11	o	CONNECTOR PIN (SMD) 9 PIN
D1	8-719-026-16	s	LED CL-150D-CD
D2	8-719-026-16	s	LED CL-150D-CD
D3	8-719-026-16	s	LED CL-150D-CD
D4	8-719-026-16	s	LED CL-150D-CD
D5	8-719-026-16	s	LED CL-150D-CD
D6	8-719-026-16	s	LED CL-150D-CD
D7	8-719-026-16	s	LED CL-150D-CD
D8	8-719-026-16	s	LED CL-150D-CD
D9	8-719-026-16	s	LED CL-150D-CD
D10	8-719-026-16	s	LED CL-150D-CD
Q1	8-729-029-09	s	TRANSISTOR DTC143EUA-T106
Q2	8-729-029-09	s	TRANSISTOR DTC143EUA-T106
Q3	8-729-029-09	s	TRANSISTOR DTC143EUA-T106
Q4	8-729-029-09	s	TRANSISTOR DTC143EUA-T106
Q5	8-729-029-09	s	TRANSISTOR DTC143EUA-T106
R1	1-218-678-11	s	RESISTOR CHIP 270 1/16W (1608)
R2	1-218-678-11	s	RESISTOR CHIP 270 1/16W (1608)
R3	1-218-678-11	s	RESISTOR CHIP 270 1/16W (1608)
R4	1-218-678-11	s	RESISTOR CHIP 270 1/16W (1608)
R5	1-218-678-11	s	RESISTOR CHIP 270 1/16W (1608)
R6	1-218-678-11	s	RESISTOR CHIP 270 1/16W (1608)
R7	1-218-678-11	s	RESISTOR CHIP 270 1/16W (1608)
R8	1-218-678-11	s	RESISTOR CHIP 270 1/16W (1608)
R9	1-218-678-11	s	RESISTOR CHIP 270 1/16W (1608)
R10	1-218-678-11	s	RESISTOR CHIP 270 1/16W (1608)

LP-81 BOARD

Ref. No. or Q'ty	Part No.	SP	Description
1pc	A-8315-623-B	o	MOUNTED CIRCUIT BOARD, LP-81
1pc	3-171-508-04	o	HOLDER, LAMP
CN932	1-564-001-11	o	PIN, CONNECTOR (2P)
D1	8-719-820-27	s	LED TLY-256
D2	8-719-820-27	s	LED TLY-256
D3	8-719-820-27	s	LED TLY-256
D4	8-719-820-27	s	LED TLY-256
D5	8-719-820-27	s	LED TLY-256
D6	8-719-820-27	s	LED TLY-256
D7	8-719-820-27	s	LED TLY-256
D8	8-719-820-27	s	LED TLY-256
D9	8-719-820-27	s	LED TLY-256
D10	8-719-820-27	s	LED TLY-256
R1	1-249-409-11	s	RESISTOR,CARBON 220 1/4W SMALL
R2	1-249-409-11	s	RESISTOR,CARBON 220 1/4W SMALL
R3	1-249-409-11	s	RESISTOR,CARBON 220 1/4W SMALL
R4	1-249-409-11	s	RESISTOR,CARBON 220 1/4W SMALL
R5	1-249-409-11	s	RESISTOR,CARBON 220 1/4W SMALL

MB-884 BOARD

[Lot No. 261 -] HDW-2000, M2000/P, M2100/P, A2100
[Lot No. 4C2 -] HDW-D2000
[Lot No. 462 -] HDW-S2000/P
[Lot No. 434 - 535] DVW-2000/P, M2000/P
[Lot No. 261 -] MSW-2000, M2000/P, A2000/P, M2100/P
[Lot No. 495 -] MSW-M2000E/P, M2100E/P

*1: [Lot No. 261 -] [Board No. suffix 15 -]
*2: [Lot No. 341 -] [Board No. suffix 16 -]

Ref. No. or Q'ty	Part No.	SP	Description
1pc	A-8324-900-B	o	MB-884 ASSY (Including MB-884 mounted circuit board)
CN1	1-778-259-12	o	CONNECTOR, BOARD TO BOARD 148P
CN3	1-778-259-12	o	CONNECTOR, BOARD TO BOARD 148P
CN4	1-778-259-12	o	CONNECTOR, BOARD TO BOARD 148P
CN5	1-778-259-12	o	CONNECTOR, BOARD TO BOARD 148P
CN6	1-778-259-12	o	CONNECTOR, BOARD TO BOARD 148P
CN7	1-778-259-12	o	CONNECTOR, BOARD TO BOARD 148P
CN8	1-778-259-12	o	CONNECTOR, BOARD TO BOARD 148P
CN9	1-778-259-12	o	CONNECTOR, BOARD TO BOARD 148P
CN10	1-778-259-12	o	CONNECTOR, BOARD TO BOARD 148P
CN13	1-778-259-12	o	CONNECTOR, BOARD TO BOARD 148P
CN14	1-778-259-12	o	CONNECTOR, BOARD TO BOARD 148P
CN15	1-778-259-12	o	CONNECTOR, BOARD TO BOARD 148P
CN16	1-778-259-12	o	CONNECTOR, BOARD TO BOARD 148P
CN17	1-778-259-12	o	CONNECTOR, BOARD TO BOARD 148P
CN18	1-778-259-12	o	CONNECTOR, BOARD TO BOARD 148P
CN19	1-778-259-12	o	CONNECTOR, BOARD TO BOARD 148P
CN20	1-778-259-12	o	CONNECTOR, BOARD TO BOARD 148P
CN21	1-778-259-12	o	CONNECTOR, BOARD TO BOARD 148P
CN22	1-778-259-12	o	CONNECTOR, BOARD TO BOARD 148P
CN23	1-778-259-12	o	CONNECTOR, BOARD TO BOARD 148P
CN24	1-778-259-12	o	CONNECTOR, BOARD TO BOARD 148P
CN25	1-778-259-12	o	CONNECTOR, BOARD TO BOARD 148P
CN26	1-778-259-12	o	CONNECTOR, BOARD TO BOARD 148P
CN27	1-778-259-12	o	CONNECTOR, BOARD TO BOARD 148P
CN61	1-566-421-11	o	HEADER,CONNECTOR 50P
CN62	1-566-421-11	o	HEADER,CONNECTOR 50P
CN65	1-691-959-11	o	PIN,CONNECTOR (PC BOARD) 4P
CN67	1-563-765-11	o	RECEPTACLE,MULTI CONNECTOR 20P
CN68	1-580-547-11	o	PIN, CONNECTOR (PC BOARD) 36P
CN69	1-770-308-11	o	HOUSING, CONNECTOR
CN71	1-564-002-11	s	PIN, CONNECTOR 3P
CN72	1-564-002-11	s	PIN, CONNECTOR 3P
CN73	1-564-013-11	o	PIN,CONNECTOR 3P
CN74	1-564-013-11	o	PIN,CONNECTOR 3P
CN85	1-573-806-21	s	PIN,CONNECTOR (6P)(SMD)(1.5MM)
CN86	1-573-806-21	s	PIN,CONNECTOR (6P)(SMD)(1.5MM)
CN87	1-691-591-11	o	PIN,CONNECTOR (8P)(SMD)(1.5MM)
CN100	1-794-227-11	o	PIN, CONNECTOR 24P
Q1	8-729-029-14	s	TRANSISTOR DTC144EUA-T106
Q2	8-729-044-58	s	TRANSISTOR SI2304DS-T1
R1	*2 1-218-895-11	s	RESISTOR,CHIP 100K 1/10W(1608)
	*1 1-218-740-11	s	RESISTOR,CHIP 100K 1/16W(1608)
R2	*2 1-218-863-11	s	RESISTOR,CHIP 4.7K 1/10W(1608)
	*1 1-218-708-11	s	RESISTOR,CHIP 4.7K 1/16W(1608)
THP1	1-803-638-11	s	THERMISTOR, POSITIVE (RUE400)
THP2	1-803-637-11	s	THERMISTOR, POSITIVE (RUE160)
THP3	1-803-637-11	s	THERMISTOR, POSITIVE (RUE160)

MB-884D BOARD [SUFFIX 17-] for DVW

[Lot No. 541 -] DVW-2000/P, M2000/P

Ref. No. or Q'ty	Part No.	SP	Description
1pc	A-1122-398-A	s	MB-884D ASSY (WITH MOUNT) (Including MB-884D mounted circuit board)
CN1	1-778-259-12	o	CONNECTOR, BOARD TO BOARD 148P
CN3	1-778-259-12	o	CONNECTOR, BOARD TO BOARD 148P
CN4	1-778-259-12	o	CONNECTOR, BOARD TO BOARD 148P
CN5	1-778-259-12	o	CONNECTOR, BOARD TO BOARD 148P
CN6	1-778-259-12	o	CONNECTOR, BOARD TO BOARD 148P
CN7	1-778-259-12	o	CONNECTOR, BOARD TO BOARD 148P
CN8	1-778-259-12	o	CONNECTOR, BOARD TO BOARD 148P
CN9	1-778-259-12	o	CONNECTOR, BOARD TO BOARD 148P
CN10	1-778-259-12	o	CONNECTOR, BOARD TO BOARD 148P
CN13	1-778-259-12	o	CONNECTOR, BOARD TO BOARD 148P
CN14	1-778-259-12	o	CONNECTOR, BOARD TO BOARD 148P
CN15	1-778-259-12	o	CONNECTOR, BOARD TO BOARD 148P
CN16	1-778-259-12	o	CONNECTOR, BOARD TO BOARD 148P
CN17	1-778-259-12	o	CONNECTOR, BOARD TO BOARD 148P
CN18	1-778-259-12	o	CONNECTOR, BOARD TO BOARD 148P
CN22	1-778-259-12	o	CONNECTOR, BOARD TO BOARD 148P
CN23	1-778-259-12	o	CONNECTOR, BOARD TO BOARD 148P
CN24	1-778-259-12	o	CONNECTOR, BOARD TO BOARD 148P
CN25	1-778-259-12	o	CONNECTOR, BOARD TO BOARD 148P
CN26	1-778-259-12	o	CONNECTOR, BOARD TO BOARD 148P
CN27	1-778-259-12	o	CONNECTOR, BOARD TO BOARD 148P
CN61	1-573-991-11	o	PIN, CONNECTOR (PC BOARD) 50P
CN62	1-573-991-11	o	PIN, CONNECTOR (PC BOARD) 50P
CN65	1-691-959-11	o	PIN,CONNECTOR (PC BOARD) 4P
CN67	1-563-765-11	o	RECEPTACLE,MULTI CONNECTOR 20P
CN68	1-580-547-11	o	PIN, CONNECTOR (PC BOARD) 36P
CN69	1-770-308-11	o	HOUSING, CONNECTOR
CN71	1-564-002-11	s	PIN, CONNECTOR 3P
CN72	1-564-002-11	s	PIN, CONNECTOR 3P
CN73	1-564-013-11	o	PIN,CONNECTOR 3P
CN74	1-564-013-11	o	PIN,CONNECTOR 3P
CN100	1-794-227-11	o	PIN, CONNECTOR 24P
Q1	8-729-029-14	s	TRANSISTOR DTC144EUA-T106
Q2	6-551-266-01	s	TRANSISTOR SI2304BDS-T1
R1	1-218-895-11	s	RESISTOR,CHIP 100K 1/10W(1608)
R2	1-218-863-11	s	RESISTOR,CHIP 4.7K 1/10W(1608)
THP1	1-803-638-11	s	THERMISTOR, POSITIVE (RUE400)
THP2	1-803-637-11	s	THERMISTOR, POSITIVE (RUE160)
THP3	1-803-637-11	s	THERMISTOR, POSITIVE (RUE160)

MBJ907B (KY-569)

See the KY-569 board.

PC-70 BOARD

Ref. No.
or Q'ty Part No. SP Description

The components on this board are out of spare parts.
When component replacement is required, replace by the assembly (including mounted circuit board) below.

A-8267-589-G s CASSETTE SVC

PTC-101 BOARD

Ref. No.
or Q'ty Part No. SP Description

The components on this board are out of spare parts.
When component replacement is required, replace by the assembly (including mounted circuit board) below.

A-8325-080-A s DIAL ASSY

PTC-102 BOARD

Ref. No.
or Q'ty Part No. SP Description

The components on this board are out of spare parts.
When component replacement is required, replace by the assembly (including mounted circuit board) below.

A-8325-414-A s BOX ASSY, GEAR (RP)

RC-89H BOARD

[Lot No. 261 -] HDW-2000, M2000/P, M2100/P, A2100
[Lot No. 4C2 -] HDW-D2000
[Lot No. 462 -] HDW-S2000/P

*1: [Lot No. 261 -] [Board No. suffix 13 -]
*2: [Lot No. 321 -] [Board No. suffix 14 -]

Ref. No. or Q'ty	Part No.	SP	Description
1pc	A-8344-020-A	o	MOUNTED CIRCUIT BOARD, RC-89H
C1	1-126-391-11	s	CAPACITOR ELECT 47MF/6.3V(105)
C2	1-126-391-11	s	CAPACITOR ELECT 47MF/6.3V(105)
C3	1-107-826-11	s	CAPACITOR,CHIP CERAMIC 0.1MF
C4	1-107-826-11	s	CAPACITOR,CHIP CERAMIC 0.1MF
C5	1-107-826-11	s	CAPACITOR,CHIP CERAMIC 0.1MF
C6	1-107-826-11	s	CAPACITOR,CHIP CERAMIC 0.1MF
C7	1-107-826-11	s	CAPACITOR,CHIP CERAMIC 0.1MF
C8	1-107-826-11	s	CAPACITOR,CHIP CERAMIC 0.1MF
C9	1-107-826-11	s	CAPACITOR,CHIP CERAMIC 0.1MF
C10	1-107-826-11	s	CAPACITOR,CHIP CERAMIC 0.1MF
C11	1-107-826-11	s	CAPACITOR,CHIP CERAMIC 0.1MF
C12	1-107-826-11	s	CAPACITOR,CHIP CERAMIC 0.1MF
C13	1-107-826-11	s	CAPACITOR,CHIP CERAMIC 0.1MF
C14	1-107-826-11	s	CAPACITOR,CHIP CERAMIC 0.1MF
C15	1-107-826-11	s	CAPACITOR,CHIP CERAMIC 0.1MF
C16	1-107-826-11	s	CAPACITOR,CHIP CERAMIC 0.1MF
C17	1-107-826-11	s	CAPACITOR,CHIP CERAMIC 0.1MF
C100	1-107-826-11	s	CAPACITOR,CHIP CERAMIC 0.1MF
C101	1-107-826-11	s	CAPACITOR,CHIP CERAMIC 0.1MF
C102	1-107-826-11	s	CAPACITOR,CHIP CERAMIC 0.1MF
C103	1-107-826-11	s	CAPACITOR,CHIP CERAMIC 0.1MF
CN1	1-793-093-11	o	CONNECTOR, BOARD TO BOARD 60P
IC1	8-759-271-86	s	IC TC7SH04FU
IC3	8-759-656-14	o	IC CXD9102AR
IC4	8-759-524-09	s	IC TC74VHC153FT (EL)
IC5	8-759-524-09	s	IC TC74VHC153FT (EL)
IC100	6-701-388-01	s	IC AD1896YRSRL
IC101	6-701-388-01	s	IC AD1896YRSRL
IC102	6-701-388-01	s	IC AD1896YRSRL
IC103	6-701-388-01	s	IC AD1896YRSRL
R1	*2 1-218-823-11	s	RESISTOR,CHIP 100 1/10W(1608)
	*1 1-218-668-11	s	RESISTOR,CHIP 100 1/16W(1608)
R2	*2 1-218-823-11	s	RESISTOR,CHIP 100 1/10W(1608)
	*1 1-218-668-11	s	RESISTOR,CHIP 100 1/16W (1608)
R4	*2 1-218-985-11	s	RESISTOR,CHIP 47 1/10W (1608)
	*1 1-218-660-91	s	RESISTOR,CHIP 47 1/16W (1608)
R5	1-216-864-11	s	RESISTOR,CHIP 0 1/16W (1608)
R7	1-216-864-11	s	RESISTOR,CHIP 0 1/16W (1608)
R8	*2 1-218-985-11	s	RESISTOR,CHIP 47 1/10W (1608)
	*1 1-218-660-91	s	RESISTOR,CHIP 47 1/16W (1608)
R10	1-216-864-11	s	RESISTOR,CHIP 0 1/16W (1608)
R11	1-216-864-11	s	RESISTOR,CHIP 0 1/16W (1608)
R12	*2 1-218-985-11	s	RESISTOR,CHIP 47 1/10W (1608)
	*1 1-218-660-91	s	RESISTOR,CHIP 47 1/16W (1608)
R13	*2 1-218-985-11	s	RESISTOR,CHIP 47 1/10W (1608)
	*1 1-218-660-91	s	RESISTOR,CHIP 47 1/16W (1608)
R14	1-216-864-11	s	RESISTOR,CHIP 0 1/16W (1608)
R15	1-216-864-11	s	RESISTOR,CHIP 0 1/16W (1608)
R16	1-216-864-11	s	RESISTOR,CHIP 0 1/16W (1608)
R19	1-216-864-11	s	RESISTOR,CHIP 0 1/16W (1608)
R20	*2 1-218-985-11	s	RESISTOR,CHIP 47 1/10W (1608)
	*1 1-218-660-91	s	RESISTOR,CHIP 47 1/16W (1608)

(RC-89H BOARD)

Ref. No. or Q'ty	Part No.	SP	Description
R22	1-216-864-11	s	RESISTOR,CHIP 0 1/16W (1608)
R23	1-216-864-11	s	RESISTOR,CHIP 0 1/16W (1608)
R100	1-216-864-11	s	RESISTOR,CHIP 0 1/16W (1608)
R101	1-216-864-11	s	RESISTOR,CHIP 0 1/16W (1608)
R102	1-216-864-11	s	RESISTOR,CHIP 0 1/16W (1608)
R103	1-216-864-11	s	RESISTOR,CHIP 0 1/16W (1608)
R104	1-218-716-11	s	RESISTOR,CHIP 10K 1/16W(1608)
R105 *2	1-218-871-11	s	RESISTOR,CHIP 10K 1/10W(1608)
*1	1-218-716-11	s	RESISTOR,CHIP 10K 1/16W(1608)
RB1	1-239-409-11	s	RESISTOR NETWORK 47 (1608)
RB2	1-239-409-11	s	RESISTOR NETWORK 47 (1608)
RB3	1-239-409-11	s	RESISTOR NETWORK 47 (1608)
RB4	1-239-409-11	s	RESISTOR NETWORK 47 (1608)
RB6	1-233-270-11	o	RESISTOR, NETWORK (8 GANG) 10K
RB8	1-233-270-11	o	RESISTOR, NETWORK (8 GANG) 10K
RB9	1-233-270-11	o	RESISTOR, NETWORK (8 GANG) 10K
RB10	1-239-409-11	s	RESISTOR NETWORK 47 (1608)
RB11	1-233-270-11	o	RESISTOR, NETWORK (8 GANG) 10K
RB12	1-233-270-11	o	RESISTOR, NETWORK (8 GANG) 10K
RB13	1-233-270-11	o	RESISTOR, NETWORK (8 GANG) 10K
RB14	1-239-409-11	s	RESISTOR NETWORK 47 (1608)

RX-80 BOARD

Since a high frequency circuit is mounted on the RX-80 board, replacement of electrical parts are impossible. Be sure to replace the whole board when the RX-80 board is malfunctioning.

Ref. No. or Q'ty	Part No.	SP	Description
1pc	A-8345-817-A	s	MOUNTED CIRCUIT BOARD, RX-80

SDI-52 BOARD [SUFFIX 15] for MSW RECORDER

[Lot No. 261 -] MSW-2000, M2000/P, A2000/P

*a: [Lot No. 261 -]
*b: [Lot No. 292 -]
*c: [Lot No. 2A1 -]

Ref. No. or Q'ty	Part No.	SP	Description
1pc	A-8324-882-C	s	MOUNTED CIRCUIT BOARD, SDI-52
C100	1-135-993-11	s	CAPACITOR TANTALUM ELECT 33MF
C101	1-107-826-11	s	CAPACITOR,CHIP CERAMIC 0.1MF
C102	1-137-927-91	s	CAPACITOR,TANTALUM ELECT 150MF
C103	1-107-826-11	s	CAPACITOR,CHIP CERAMIC 0.1MF
C104	1-107-826-11	s	CAPACITOR,CHIP CERAMIC 0.1MF
C105	1-107-682-11	s	CAPACITOR,CHIP 1MF/16V (3216)
C106	1-107-826-11	s	CAPACITOR,CHIP CERAMIC 0.1MF
C107	1-162-923-11	s	CAPACITOR,CERAMIC 47PF/50V CH
C108	1-137-927-91	s	CAPACITOR,TANTALUM ELECT 150MF
C109	1-107-826-11	s	CAPACITOR,CHIP CERAMIC 0.1MF
C110	1-107-682-11	s	CAPACITOR,CHIP 1MF/16V (3216)
C111	1-107-826-11	s	CAPACITOR,CHIP CERAMIC 0.1MF
C112	1-104-851-11	s	CAPACITOR,TANTALUM 10MF/10V
C113	1-107-826-11	s	CAPACITOR,CHIP CERAMIC 0.1MF
C114	1-107-826-11	s	CAPACITOR,CHIP CERAMIC 0.1MF
C115	1-107-826-11	s	CAPACITOR,CHIP CERAMIC 0.1MF
C116	1-107-826-11	s	CAPACITOR,CHIP CERAMIC 0.1MF
C117	1-107-826-11	s	CAPACITOR,CHIP CERAMIC 0.1MF
C118	1-162-915-11	s	CAPACITOR,CERAMIC 10PF/50V CH
C119	1-107-826-11	s	CAPACITOR,CHIP CERAMIC 0.1MF
C120	1-107-826-11	s	CAPACITOR,CHIP CERAMIC 0.1MF
C121	1-107-826-11	s	CAPACITOR,CHIP CERAMIC 0.1MF
C122	1-135-993-11	s	CAPACITOR TANTALUM ELECT 33MF
C123	1-135-993-11	s	CAPACITOR TANTALUM ELECT 33MF
C124	1-107-826-11	s	CAPACITOR,CHIP CERAMIC 0.1MF
C125	1-107-826-11	s	CAPACITOR,CHIP CERAMIC 0.1MF
C126	1-107-826-11	s	CAPACITOR,CHIP CERAMIC 0.1MF
C127	1-107-826-11	s	CAPACITOR,CHIP CERAMIC 0.1MF
C128	1-107-826-11	s	CAPACITOR,CHIP CERAMIC 0.1MF
C129	1-107-826-11	s	CAPACITOR,CHIP CERAMIC 0.1MF
C130	1-107-826-11	s	CAPACITOR,CHIP CERAMIC 0.1MF
C131	1-107-826-11	s	CAPACITOR,CHIP CERAMIC 0.1MF
C132	1-107-826-11	s	CAPACITOR,CHIP CERAMIC 0.1MF
C133	1-107-826-11	s	CAPACITOR,CHIP CERAMIC 0.1MF
C134	1-107-826-11	s	CAPACITOR,CHIP CERAMIC 0.1MF
C135	1-107-826-11	s	CAPACITOR,CHIP CERAMIC 0.1MF
C136	1-107-826-11	s	CAPACITOR,CHIP CERAMIC 0.1MF
C137	1-107-826-11	s	CAPACITOR,CHIP CERAMIC 0.1MF
C138	1-107-826-11	s	CAPACITOR,CHIP CERAMIC 0.1MF
C139	1-107-826-11	s	CAPACITOR,CHIP CERAMIC 0.1MF
C140	1-107-826-11	s	CAPACITOR,CHIP CERAMIC 0.1MF
C141	1-107-826-11	s	CAPACITOR,CHIP CERAMIC 0.1MF
C142	1-162-911-11	s	CAPACITOR,CERAMIC 6PF/50V 1608
C143	1-107-826-11	s	CAPACITOR,CHIP CERAMIC 0.1MF
C144	1-107-826-11	s	CAPACITOR,CHIP CERAMIC 0.1MF
C145	1-107-826-11	s	CAPACITOR,CHIP CERAMIC 0.1MF
C146	1-107-826-11	s	CAPACITOR,CHIP CERAMIC 0.1MF
C147	1-107-826-11	s	CAPACITOR,CHIP CERAMIC 0.1MF
C148	1-135-993-11	s	CAPACITOR TANTALUM ELECT 33MF
C149	1-162-907-11	s	CAPACITOR,CERAMIC 2PF/50V(CK)
C150	1-107-826-11	s	CAPACITOR,CHIP CERAMIC 0.1MF
C151	1-107-826-11	s	CAPACITOR,CHIP CERAMIC 0.1MF

(SDI-52 BOARD [SUFFIX 15] for MSW RECORDER)

Ref. No. or Q'ty	Part No.	SP	Description
C152	1-125-891-11	s	CAPACITOR CERAMIC 0.47MF/10V
C153	1-107-826-11	s	CAPACITOR,CHIP CERAMIC 0.1MF
C154	1-107-826-11	s	CAPACITOR,CHIP CERAMIC 0.1MF
C155	1-107-826-11	s	CAPACITOR,CHIP CERAMIC 0.1MF
C156	1-107-826-11	s	CAPACITOR,CHIP CERAMIC 0.1MF
C157	1-107-826-11	s	CAPACITOR,CHIP CERAMIC 0.1MF
C300	1-107-826-11	s	CAPACITOR,CHIP CERAMIC 0.1MF
C301	1-107-826-11	s	CAPACITOR,CHIP CERAMIC 0.1MF
C302	1-107-826-11	s	CAPACITOR,CHIP CERAMIC 0.1MF
C303	1-107-826-11	s	CAPACITOR,CHIP CERAMIC 0.1MF
C304	1-107-826-11	s	CAPACITOR,CHIP CERAMIC 0.1MF
C305	1-107-826-11	s	CAPACITOR,CHIP CERAMIC 0.1MF
C306	1-107-826-11	s	CAPACITOR,CHIP CERAMIC 0.1MF
C307	1-164-230-11	s	CAPACITOR,CERAMIC 220PF/50V
C308	1-107-826-11	s	CAPACITOR,CHIP CERAMIC 0.1MF
C309	1-107-826-11	s	CAPACITOR,CHIP CERAMIC 0.1MF
C310	1-107-826-11	s	CAPACITOR,CHIP CERAMIC 0.1MF
C311	1-135-870-91	s	CAPACITOR, TANTALUM 2.2/16V
C312	1-135-957-11	s	CAP, CHIP TANTALUM ELECT 10MF
C313	1-104-851-11	s	CAPACITOR,TANTALUM 10MF/10V
C314	1-137-927-91	s	CAPACITOR,TANTALUM ELECT 150MF
C315	1-107-826-11	s	CAPACITOR,CHIP CERAMIC 0.1MF
C316	1-128-964-11	s	CAPACITOR,TANTALUM 100MF/6.3V
C317	1-107-826-11	s	CAPACITOR,CHIP CERAMIC 0.1MF
C502	1-107-826-11	s	CAPACITOR,CHIP CERAMIC 0.1MF
C503	1-107-826-11	s	CAPACITOR,CHIP CERAMIC 0.1MF
C504	1-107-826-11	s	CAPACITOR,CHIP CERAMIC 0.1MF
C505	1-107-826-11	s	CAPACITOR,CHIP CERAMIC 0.1MF
C506	1-135-993-11	s	CAPACITOR TANTALUM ELECT 33MF
C507	1-137-927-91	s	CAPACITOR,TANTALUM ELECT 150MF
C508	1-107-826-11	s	CAPACITOR,CHIP CERAMIC 0.1MF
C509	1-107-826-11	s	CAPACITOR,CHIP CERAMIC 0.1MF
C510	1-107-826-11	s	CAPACITOR,CHIP CERAMIC 0.1MF
C511	1-137-927-91	s	CAPACITOR,TANTALUM ELECT 150MF
C512	1-107-826-11	s	CAPACITOR,CHIP CERAMIC 0.1MF
C513	1-135-993-11	s	CAPACITOR TANTALUM ELECT 33MF
C514	1-107-826-11	s	CAPACITOR,CHIP CERAMIC 0.1MF
C515	1-107-826-11	s	CAPACITOR,CHIP CERAMIC 0.1MF
C516	1-107-826-11	s	CAPACITOR,CHIP CERAMIC 0.1MF
C517	1-107-826-11	s	CAPACITOR,CHIP CERAMIC 0.1MF
C518	1-107-826-11	s	CAPACITOR,CHIP CERAMIC 0.1MF
C519	1-107-826-11	s	CAPACITOR,CHIP CERAMIC 0.1MF
C520	1-107-826-11	s	CAPACITOR,CHIP CERAMIC 0.1MF
C521	1-107-826-11	s	CAPACITOR,CHIP CERAMIC 0.1MF
C522	1-107-826-11	s	CAPACITOR,CHIP CERAMIC 0.1MF
C523	1-107-826-11	s	CAPACITOR,CHIP CERAMIC 0.1MF
C524	1-107-826-11	s	CAPACITOR,CHIP CERAMIC 0.1MF
C525	1-135-993-11	s	CAPACITOR TANTALUM ELECT 33MF
C526	1-162-915-11	s	CAPACITOR,CERAMIC 10PF/50V CH
C527	1-107-826-11	s	CAPACITOR,CHIP CERAMIC 0.1MF
C528	1-107-826-11	s	CAPACITOR,CHIP CERAMIC 0.1MF
C529	1-107-826-11	s	CAPACITOR,CHIP CERAMIC 0.1MF
C530	1-107-826-11	s	CAPACITOR,CHIP CERAMIC 0.1MF
C531	1-107-826-11	s	CAPACITOR,CHIP CERAMIC 0.1MF
C532	1-107-826-11	s	CAPACITOR,CHIP CERAMIC 0.1MF
C533	1-107-826-11	s	CAPACITOR,CHIP CERAMIC 0.1MF
C534	1-107-826-11	s	CAPACITOR,CHIP CERAMIC 0.1MF
C535	1-107-826-11	s	CAPACITOR,CHIP CERAMIC 0.1MF
C536	1-107-826-11	s	CAPACITOR,CHIP CERAMIC 0.1MF

(SDI-52 BOARD [SUFFIX 15] for MSW RECORDER)

Ref. No. or Q'ty	Part No.	SP	Description
C537	1-107-826-11	s	CAPACITOR,CHIP CERAMIC 0.1MF
C539	1-107-826-11	s	CAPACITOR,CHIP CERAMIC 0.1MF
C540	1-162-911-11	s	CAPACITOR,CERAMIC 6PF/50V 1608
C542	1-107-826-11	s	CAPACITOR,CHIP CERAMIC 0.1MF
C543	1-107-826-11	s	CAPACITOR,CHIP CERAMIC 0.1MF
C544	1-107-826-11	s	CAPACITOR,CHIP CERAMIC 0.1MF
C545	1-107-826-11	s	CAPACITOR,CHIP CERAMIC 0.1MF
C547	1-107-826-11	s	CAPACITOR,CHIP CERAMIC 0.1MF
C548	1-107-826-11	s	CAPACITOR,CHIP CERAMIC 0.1MF
C549	1-135-993-11	s	CAPACITOR TANTALUM ELECT 33MF
C551	1-162-907-11	s	CAPACITOR,CERAMIC 2PF/50V(CK)
C552	1-162-907-11	s	CAPACITOR,CERAMIC 2PF/50V(CK)
C600	1-107-826-11	s	CAPACITOR,CHIP CERAMIC 0.1MF
C601	1-107-826-11	s	CAPACITOR,CHIP CERAMIC 0.1MF
C602	1-107-826-11	s	CAPACITOR,CHIP CERAMIC 0.1MF
C603	1-107-826-11	s	CAPACITOR,CHIP CERAMIC 0.1MF
C604	1-135-993-11	s	CAPACITOR TANTALUM ELECT 33MF
C605	1-137-927-91	s	CAPACITOR,TANTALUM ELECT 150MF
C606	1-107-826-11	s	CAPACITOR,CHIP CERAMIC 0.1MF
C607	1-107-826-11	s	CAPACITOR,CHIP CERAMIC 0.1MF
C608	1-107-826-11	s	CAPACITOR,CHIP CERAMIC 0.1MF
C609	1-137-927-91	s	CAPACITOR,TANTALUM ELECT 150MF
C610	1-107-826-11	s	CAPACITOR,CHIP CERAMIC 0.1MF
C611	1-135-993-11	s	CAPACITOR TANTALUM ELECT 33MF
C612	1-107-826-11	s	CAPACITOR,CHIP CERAMIC 0.1MF
C613	1-107-826-11	s	CAPACITOR,CHIP CERAMIC 0.1MF
C614	1-107-826-11	s	CAPACITOR,CHIP CERAMIC 0.1MF
C615	1-107-826-11	s	CAPACITOR,CHIP CERAMIC 0.1MF
C616	1-107-826-11	s	CAPACITOR,CHIP CERAMIC 0.1MF
C617	1-107-826-11	s	CAPACITOR,CHIP CERAMIC 0.1MF
C618	1-107-826-11	s	CAPACITOR,CHIP CERAMIC 0.1MF
C619	1-107-826-11	s	CAPACITOR,CHIP CERAMIC 0.1MF
C620	1-107-826-11	s	CAPACITOR,CHIP CERAMIC 0.1MF
C621	1-107-826-11	s	CAPACITOR,CHIP CERAMIC 0.1MF
C622	1-107-826-11	s	CAPACITOR,CHIP CERAMIC 0.1MF
C623	1-135-993-11	s	CAPACITOR TANTALUM ELECT 33MF
C624	1-162-915-11	s	CAPACITOR,CERAMIC 10PF/50V CH
C625	1-107-826-11	s	CAPACITOR,CHIP CERAMIC 0.1MF
C626	1-107-826-11	s	CAPACITOR,CHIP CERAMIC 0.1MF
C627	1-107-826-11	s	CAPACITOR,CHIP CERAMIC 0.1MF
C628	1-107-826-11	s	CAPACITOR,CHIP CERAMIC 0.1MF
C629	1-107-826-11	s	CAPACITOR,CHIP CERAMIC 0.1MF
C630	1-107-826-11	s	CAPACITOR,CHIP CERAMIC 0.1MF
C631	1-107-826-11	s	CAPACITOR,CHIP CERAMIC 0.1MF
C632	1-107-826-11	s	CAPACITOR,CHIP CERAMIC 0.1MF
C633	1-107-826-11	s	CAPACITOR,CHIP CERAMIC 0.1MF
C634	1-107-826-11	s	CAPACITOR,CHIP CERAMIC 0.1MF
C635	1-107-826-11	s	CAPACITOR,CHIP CERAMIC 0.1MF
C636	1-107-826-11	s	CAPACITOR,CHIP CERAMIC 0.1MF
C637	1-162-911-11	s	CAPACITOR,CERAMIC 6PF/50V 1608
C638	1-107-826-11	s	CAPACITOR,CHIP CERAMIC 0.1MF
C639	1-107-826-11	s	CAPACITOR,CHIP CERAMIC 0.1MF
C640	1-107-826-11	s	CAPACITOR,CHIP CERAMIC 0.1MF
C641	1-107-826-11	s	CAPACITOR,CHIP CERAMIC 0.1MF
C642	1-107-826-11	s	CAPACITOR,CHIP CERAMIC 0.1MF
C643	1-135-993-11	s	CAPACITOR TANTALUM ELECT 33MF
C644	1-162-907-11	s	CAPACITOR,CERAMIC 2PF/50V(CK)
C700	1-107-826-11	s	CAPACITOR,CHIP CERAMIC 0.1MF
C701	1-107-826-11	s	CAPACITOR,CHIP CERAMIC 0.1MF

(SDI-52 BOARD [SUFFIX 15] for MSW RECORDER)

Ref. No. or Q'ty	Part No.	SP	Description
C702	1-107-826-11	s	CAPACITOR,CHIP CERAMIC 0.1MF
C703	1-107-826-11	s	CAPACITOR,CHIP CERAMIC 0.1MF
C704	1-107-826-11	s	CAPACITOR,CHIP CERAMIC 0.1MF
C705	1-107-826-11	s	CAPACITOR,CHIP CERAMIC 0.1MF
C706	1-107-826-11	s	CAPACITOR,CHIP CERAMIC 0.1MF
C707	1-107-826-11	s	CAPACITOR,CHIP CERAMIC 0.1MF
C708	1-107-826-11	s	CAPACITOR,CHIP CERAMIC 0.1MF
C709	1-107-826-11	s	CAPACITOR,CHIP CERAMIC 0.1MF
C710	1-107-826-11	s	CAPACITOR,CHIP CERAMIC 0.1MF
C713	1-107-826-11	s	CAPACITOR,CHIP CERAMIC 0.1MF
C714	1-107-826-11	s	CAPACITOR,CHIP CERAMIC 0.1MF
C801	1-164-156-11	s	CAPACITOR,CERAMIC 0.1MF/25V F
C802	1-164-156-11	s	CAPACITOR,CERAMIC 0.1MF/25V F
C803	1-164-156-11	s	CAPACITOR,CERAMIC 0.1MF/25V F
C804	1-164-156-11	s	CAPACITOR,CERAMIC 0.1MF/25V F
C805	1-164-156-11	s	CAPACITOR,CERAMIC 0.1MF/25V F
C806	1-164-156-11	s	CAPACITOR,CERAMIC 0.1MF/25V F
C807	1-164-156-11	s	CAPACITOR,CERAMIC 0.1MF/25V F
C808	1-164-156-11	s	CAPACITOR,CERAMIC 0.1MF/25V F
C809	1-164-156-11	s	CAPACITOR,CERAMIC 0.1MF/25V F
C810	1-107-686-11	s	CAPACITOR,TANTALUM 4.7MF/16V
C811	1-111-253-11	s	CAPACITOR TANTALUM 100MF/6.3V
C812	1-164-156-11	s	CAPACITOR,CERAMIC 0.1MF/25V F
C813	1-164-156-11	s	CAPACITOR,CERAMIC 0.1MF/25V F
C814	1-164-156-11	s	CAPACITOR,CERAMIC 0.1MF/25V F
C815	1-164-156-11	s	CAPACITOR,CERAMIC 0.1MF/25V F
C816	1-164-156-11	s	CAPACITOR,CERAMIC 0.1MF/25V F
C817	1-164-156-11	s	CAPACITOR,CERAMIC 0.1MF/25V F
C818	1-164-156-11	s	CAPACITOR,CERAMIC 0.1MF/25V F
C819	1-164-156-11	s	CAPACITOR,CERAMIC 0.1MF/25V F
C820	1-164-156-11	s	CAPACITOR,CERAMIC 0.1MF/25V F
C821	1-164-156-11	s	CAPACITOR,CERAMIC 0.1MF/25V F
C822	1-164-156-11	s	CAPACITOR,CERAMIC 0.1MF/25V F
C823	1-164-156-11	s	CAPACITOR,CERAMIC 0.1MF/25V F
C824	1-164-156-11	s	CAPACITOR,CERAMIC 0.1MF/25V F
CN100	1-764-243-11	o	CONNECTOR (COAXIAL)
CN101	1-764-243-11	o	CONNECTOR (COAXIAL)
CN500	1-764-243-11	o	CONNECTOR (COAXIAL)
CN501	1-764-243-11	o	CONNECTOR (COAXIAL)
CN600	1-764-243-11	o	CONNECTOR (COAXIAL)
CN800	1-580-789-21	o	PIN,CONNECTOR (SMD) 6P
D300	8-719-941-04	s	DIODE SB007-03CP
D301	8-719-941-04	s	DIODE SB007-03CP
D700	8-719-064-52	s	DIODE CL-191YG-CD-T
D701	8-719-064-52	s	DIODE CL-191YG-CD-T
D800	8-719-820-41	s	DIODE 1SS302
FB100	1-414-864-11	s	INDUCTOR, MICRO (CHIP TYPE)
FB101	1-414-864-11	s	INDUCTOR, MICRO (CHIP TYPE)
FB102	1-414-864-11	s	INDUCTOR, MICRO (CHIP TYPE)
FB103	1-414-864-11	s	INDUCTOR, MICRO (CHIP TYPE)
FB104	1-414-864-11	s	INDUCTOR, MICRO (CHIP TYPE)
FB105	1-414-864-11	s	INDUCTOR, MICRO (CHIP TYPE)
FB106	1-414-864-11	s	INDUCTOR, MICRO (CHIP TYPE)
FB500	1-414-864-11	s	INDUCTOR, MICRO (CHIP TYPE)
FB501	1-414-864-11	s	INDUCTOR, MICRO (CHIP TYPE)
FB502	1-414-864-11	s	INDUCTOR, MICRO (CHIP TYPE)
FB503	1-414-864-11	s	INDUCTOR, MICRO (CHIP TYPE)
FB504	1-414-864-11	s	INDUCTOR, MICRO (CHIP TYPE)

(SDI-52 BOARD [SUFFIX 15] for MSW RECORDER)

Ref. No. or Q'ty	Part No.	SP	Description
FB505	1-414-864-11	s	INDUCTOR, MICRO (CHIP TYPE)
FB600	1-414-864-11	s	INDUCTOR, MICRO (CHIP TYPE)
FB601	1-414-864-11	s	INDUCTOR, MICRO (CHIP TYPE)
FB602	1-414-864-11	s	INDUCTOR, MICRO (CHIP TYPE)
FB603	1-414-864-11	s	INDUCTOR, MICRO (CHIP TYPE)
FB604	1-414-864-11	s	INDUCTOR, MICRO (CHIP TYPE)
FB605	1-414-864-11	s	INDUCTOR, MICRO (CHIP TYPE)
IC100	8-759-337-40	s	IC NJM2904V(TE2)
IC101	8-759-533-85	s	IC L88M05T-FA-TL
IC102	8-759-460-72	s	IC BA033FP
IC103	8-752-078-34	s	IC CXB1342R
IC104	8-759-549-15	s	IC SN74LV245APWR
IC105	8-759-549-15	s	IC SN74LV245APWR
IC107	8-759-523-84	s	IC TC74VHC14FT (EL)
IC108	8-759-523-95	s	IC TC74VHC74FT(EL)
IC109	8-759-523-94	s	IC TC74VHC32FT(EL)
IC300 *b	8-759-475-48	s	IC TC74LCX245FT(EL)
*a	8-759-549-15	s	IC SN74LV245APWR
IC302	8-759-491-46	s	IC TC74VHCT04AFT (EL)
IC303	8-759-524-09	s	IC TC74VHC153FT (EL)
IC304	8-759-523-95	s	IC TC74VHC74FT(EL)
IC305	8-759-392-01	s	IC TC7SH86FU (TE85R)
IC306	8-759-524-49	s	IC TC74VHC540FT (EL)
IC307	8-759-832-05	s	IC BA18BC0FP-E2
IC502	8-759-549-15	s	IC SN74LV245APWR
IC503	8-759-549-15	s	IC SN74LV245APWR
IC504	8-759-533-85	s	IC L88M05T-FA-TL
IC505	8-759-337-40	s	IC NJM2904V(TE2)
IC506	8-759-460-72	s	IC BA033FP
IC507	8-752-078-32	s	IC CXB1341R
IC600	8-759-549-15	s	IC SN74LV245APWR
IC601	8-759-549-15	s	IC SN74LV245APWR
IC602	8-759-533-85	s	IC L88M05T-FA-TL
IC604	8-759-460-72	s	IC BA033FP
IC605	8-752-078-32	s	IC CXB1341R
IC606	8-759-337-40	s	IC NJM2904V(TE2)
IC700	8-759-491-46	s	IC TC74VHCT04AFT (EL)
IC701	8-759-524-07	s	IC TC74VHC138FT(EL)
IC704	8-752-392-03	s	IC CXD1095BR
IC707	8-759-523-81	s	IC TC74VHC08FT(EL)
IC801	6-802-601-01	s	IC XC18V02-SDI52-V100
IC802	6-702-238-11	s	IC HY57V643220CT-7TR
IC804	8-749-018-41	s	IC SI-3025LSA-TL
IC806	8-759-524-27	s	IC TC74VHC244FT(EL)
IC807	8-759-491-46	s	IC TC74VHCT04AFT (EL)
L100	1-410-797-11	s	CHIP INDUCTOR 0.015UH (3225)
L300	1-416-344-11	s	COIL, CHOKE 10UH
Q1	8-729-029-14	s	TRANSISTOR DTC144EUA-T106
Q100	8-729-140-63	s	TRANSISTOR 2SA1611-M5M6
Q101	8-729-043-92	s	TRANSISTOR 2SC5084-0(TE85L)
Q102	8-729-043-92	s	TRANSISTOR 2SC5084-0(TE85L)
Q103	8-729-043-92	s	TRANSISTOR 2SC5084-0(TE85L)
Q104	8-729-043-92	s	TRANSISTOR 2SC5084-0(TE85L)
Q500	8-729-140-63	s	TRANSISTOR 2SA1611-M5M6
Q501	8-729-117-32	s	TRANSISTOR 2SC4177
Q502	8-729-117-32	s	TRANSISTOR 2SC4177
Q503	8-729-043-92	s	TRANSISTOR 2SC5084-0(TE85L)

(SDI-52 BOARD [SUFFIX 15] for MSW RECORDER)

Ref. No. or Q'ty	Part No.	SP	Description
Q505	8-729-043-92	s	TRANSISTOR 2SC5084-0(TE85L)
Q508	8-729-043-92	s	TRANSISTOR 2SC5084-0(TE85L)
Q510	8-729-043-92	s	TRANSISTOR 2SC5084-0(TE85L)
Q600	8-729-140-63	s	TRANSISTOR 2SA1611-M5M6
Q601	8-729-117-32	s	TRANSISTOR 2SC4177
Q602	8-729-117-32	s	TRANSISTOR 2SC4177
Q603	8-729-043-92	s	TRANSISTOR 2SC5084-0(TE85L)
Q604	8-729-043-92	s	TRANSISTOR 2SC5084-0(TE85L)
Q605	8-729-043-92	s	TRANSISTOR 2SC5084-0(TE85L)
Q606	8-729-043-92	s	TRANSISTOR 2SC5084-0(TE85L)
R100	1-218-668-11	s	RESISTOR,CHIP 100 1/16W (1608)
R101	1-218-711-11	s	RESISTOR,METAL 6.2K 1/16W
R102	1-218-699-11	s	RESISTOR,CHIP 2.0K 1/16W(1608)
R103	1-218-710-11	s	RESISTOR,CHIP 5.6K 1/16W(1608)
R104	1-218-678-11	s	RESISTOR CHIP 270 1/16W (1608)
R105	1-218-665-11	s	RESISTOR,CHIP 75 1/16W (1608)
R106	1-218-660-91	s	RESISTOR,CHIP 47 1/16W (1608)
R107	1-218-712-11	s	RESISTOR,METAL 6.8K 1/16W
R109	1-218-684-11	s	RESISTOR,CHIP 470 1/16W (1608)
R110	1-218-718-11	s	RESISTOR CHIP 12K 1/16W (1608)
R112	1-218-694-11	s	RESISTOR,CHIP 1.2K1/16W(1608)
R115	1-218-684-11	s	RESISTOR,CHIP 470 1/16W (1608)
R116	1-218-665-11	s	RESISTOR,CHIP 75 1/16W (1608)
R117	1-218-665-11	s	RESISTOR,CHIP 75 1/16W (1608)
R118	1-218-680-11	s	RESISTOR,CHIP 330 1/16W(1608)
R119	1-218-680-11	s	RESISTOR,CHIP 330 1/16W(1608)
R120	1-218-700-11	s	RESISTOR,CHIP 2.2K 1/16W(1608)
R121	1-218-700-11	s	RESISTOR,CHIP 2.2K 1/16W(1608)
R122	1-218-700-11	s	RESISTOR,CHIP 2.2K 1/16W(1608)
R124	1-218-678-11	s	RESISTOR CHIP 270 1/16W (1608)
R125	1-218-678-11	s	RESISTOR CHIP 270 1/16W (1608)
R126	1-218-660-91	s	RESISTOR,CHIP 47 1/16W (1608)
R127	1-216-623-11	s	RESISTOR,CHIP 68 1/10W(2012)
R128	1-216-612-11	s	RESISTOR,CHIP 24 1/10W(2012)
R129	1-216-618-11	s	RESISTOR,CHIP 43 1/10W(2012)
R130	1-218-674-11	s	RESISTOR CHIP 180 1/16W (1608)
R131	1-218-660-91	s	RESISTOR,CHIP 47 1/16W (1608)
R132	1-216-623-11	s	RESISTOR,CHIP 68 1/10W(2012)
R133	1-216-612-11	s	RESISTOR,CHIP 24 1/10W(2012)
R134	1-216-649-11	s	RESISTOR,CHIP 820 1/10W (2012)
R135	*c deleted		
	*a 1-216-864-11	s	CONDUCTOR, CHIP (1608)
R136	1-216-864-11	s	CONDUCTOR, CHIP (1608)
R137	1-218-660-91	s	RESISTOR,CHIP 47 1/16W (1608)
R138	1-218-660-91	s	RESISTOR,CHIP 47 1/16W (1608)
R139	1-218-660-91	s	RESISTOR,CHIP 47 1/16W (1608)
R140	*c 1-216-864-11	s	CONDUCTOR, CHIP (1608)
R141	1-216-631-11	s	RESISTOR,CHIP 150 1/10W (2012)
R142	1-216-631-11	s	RESISTOR,CHIP 150 1/10W (2012)
R143	1-218-692-11	s	RESISTOR,CHIP 1.0K 1/16W(1608)
R144	1-218-664-11	s	RESISTOR,CHIP 68 1/16W (1608)
R145	1-218-660-91	s	RESISTOR,CHIP 47 1/16W (1608)
R146	1-218-700-11	s	RESISTOR,CHIP 2.2K 1/16W(1608)
R147	1-218-718-11	s	RESISTOR CHIP 12K 1/16W (1608)
R148	1-216-854-11	s	RESISTOR, CHIP 560K 1/16W 1608
R151	1-218-740-11	s	RESISTOR,CHIP 100K 1/16W(1608)
R300	1-218-644-11	s	RESISTOR,CHIP 10 1/16W
R304	1-216-864-11	s	CONDUCTOR, CHIP (1608)
R305	*b 1-216-864-11	s	CONDUCTOR, CHIP (1608)
R306	1-216-864-11	s	CONDUCTOR, CHIP (1608)

(SDI-52 BOARD [SUFFIX 15] for MSW RECORDER)

Ref. No. or Q'ty	Part No.	SP	Description
R309	1-216-864-11	s	CONDUCTOR, CHIP (1608)
R313	1-218-644-11	s	RESISTOR,CHIP 10 1/16W
R314	1-218-644-11	s	RESISTOR,CHIP 10 1/16W
R315	1-218-660-91	s	RESISTOR,CHIP 47 1/16W (1608)
R316	*b 1-216-864-11	s	CONDUCTOR, CHIP (1608)
R317	1-216-864-11	s	CONDUCTOR, CHIP (1608)
R318	1-216-864-11	s	CONDUCTOR, CHIP (1608)
R320	1-216-864-11	s	CONDUCTOR, CHIP (1608)
R321	*b 1-216-864-11	s	CONDUCTOR, CHIP (1608)
R323	1-218-722-11	s	RESISTOR, CHIP 18K 1/16W 1608
R324	1-218-740-11	s	RESISTOR,CHIP 100K 1/16W(1608)
R325	1-218-740-11	s	RESISTOR,CHIP 100K 1/16W(1608)
R326	1-218-740-11	s	RESISTOR,CHIP 100K 1/16W(1608)
R500	1-218-728-11	s	RESISTOR,CHIP 33K 1/16W
R501	1-218-728-11	s	RESISTOR,CHIP 33K 1/16W
R502	1-218-676-11	s	RESISTOR,CHIP 220 1/16W(1608)
R503	1-218-676-11	s	RESISTOR,CHIP 220 1/16W(1608)
R507	1-218-660-91	s	RESISTOR,CHIP 47 1/16W (1608)
R508	1-218-668-11	s	RESISTOR,CHIP 100 1/16W (1608)
R509	1-218-711-11	s	RESISTOR,METAL 6.2K 1/16W
R510	1-218-701-11	s	RESISTOR,CHIP 2.4K 1/16W(1608)
R511	1-218-710-11	s	RESISTOR,CHIP 5.6K 1/16W(1608)
R512	1-218-668-11	s	RESISTOR,CHIP 100 1/16W (1608)
R513	1-218-720-11	s	RESISTOR,CHIP 15K 1/16W(1608)
R514	1-218-720-11	s	RESISTOR,CHIP 15K 1/16W(1608)
R515	1-218-660-91	s	RESISTOR,CHIP 47 1/16W (1608)
R516	1-218-712-11	s	RESISTOR,METAL 6.8K 1/16W
R517	1-218-700-11	s	RESISTOR,CHIP 2.2K 1/16W(1608)
R518	1-218-718-11	s	RESISTOR CHIP 12K 1/16W (1608)
R519	1-218-660-91	s	RESISTOR,CHIP 47 1/16W (1608)
R520	1-218-692-11	s	RESISTOR,CHIP 1.0K 1/16W(1608)
R522	1-218-660-91	s	RESISTOR,CHIP 47 1/16W (1608)
R523	1-218-700-11	s	RESISTOR,CHIP 2.2K 1/16W(1608)
R524	1-218-696-11	s	RESISTOR,CHIP 1.5K 1/16W(1608)
R525	1-218-674-11	s	RESISTOR CHIP 180 1/16W (1608)
R526	1-218-660-91	s	RESISTOR,CHIP 47 1/16W (1608)
R527	1-218-678-11	s	RESISTOR CHIP 270 1/16W (1608)
R528	1-218-700-11	s	RESISTOR,CHIP 2.2K 1/16W(1608)
R529	1-218-684-11	s	RESISTOR,CHIP 470 1/16W (1608)
R530	1-218-714-11	s	RESISTOR,CHIP 8.2K 1/16W(1608)
R531	1-218-716-11	s	RESISTOR,CHIP 10K 1/16W(1608)
R533	1-218-678-11	s	RESISTOR CHIP 270 1/16W (1608)
R534	1-218-678-11	s	RESISTOR CHIP 270 1/16W (1608)
R535	1-218-660-91	s	RESISTOR,CHIP 47 1/16W (1608)
R537	1-216-623-11	s	RESISTOR,CHIP 68 1/10W(2012)
R538	1-216-612-11	s	RESISTOR,CHIP 24 1/10W(2012)
R539	1-216-618-11	s	RESISTOR,CHIP 43 1/10W(2012)
R542	1-218-674-11	s	RESISTOR CHIP 180 1/16W (1608)
R544	1-216-623-11	s	RESISTOR,CHIP 68 1/10W(2012)
R545	1-216-612-11	s	RESISTOR,CHIP 24 1/10W(2012)
R546	1-216-649-11	s	RESISTOR,CHIP 820 1/10W (2012)
R549	1-218-644-11	s	RESISTOR,CHIP 10 1/16W
R550	1-218-644-11	s	RESISTOR,CHIP 10 1/16W
R551	1-218-660-91	s	RESISTOR,CHIP 47 1/16W (1608)
R554	1-216-631-11	s	RESISTOR,CHIP 150 1/10W (2012)
R557	1-216-631-11	s	RESISTOR,CHIP 150 1/10W (2012)
R558	1-218-692-11	s	RESISTOR,CHIP 1.0K 1/16W(1608)
R559	1-218-692-11	s	RESISTOR,CHIP 1.0K 1/16W(1608)
R560	1-218-664-11	s	RESISTOR,CHIP 68 1/16W (1608)

(SDI-52 BOARD [SUFFIX 15] for MSW RECORDER)

Ref. No. or Q'ty	Part No.	SP	Description
R561	1-218-664-11	s	RESISTOR,CHIP 68 1/16W (1608)
R600	1-218-660-91	s	RESISTOR,CHIP 47 1/16W (1608)
R603	1-218-660-91	s	RESISTOR,CHIP 47 1/16W (1608)
R604	1-218-668-11	s	RESISTOR,CHIP 100 1/16W (1608)
R605	1-218-711-11	s	RESISTOR,METAL 6.2K 1/16W
R606	1-218-701-11	s	RESISTOR,CHIP 2.4K 1/16W(1608)
R607	1-218-710-11	s	RESISTOR,CHIP 5.6K 1/16W(1608)
R608	1-218-678-11	s	RESISTOR CHIP 270 1/16W (1608)
R609	1-218-720-11	s	RESISTOR,CHIP 15K 1/16W(1608)
R610	1-218-720-11	s	RESISTOR,CHIP 15K 1/16W(1608)
R611	1-218-660-91	s	RESISTOR,CHIP 47 1/16W (1608)
R612	1-218-712-11	s	RESISTOR,METAL 6.8K 1/16W
R613	1-218-700-11	s	RESISTOR,CHIP 2.2K 1/16W(1608)
R614	1-218-718-11	s	RESISTOR CHIP 12K 1/16W (1608)
R615	1-218-660-91	s	RESISTOR,CHIP 47 1/16W (1608)
R616	1-218-692-11	s	RESISTOR,CHIP 1.0K 1/16W(1608)
R618	1-218-660-91	s	RESISTOR,CHIP 47 1/16W (1608)
R619	1-218-700-11	s	RESISTOR,CHIP 2.2K 1/16W(1608)
R620	1-218-696-11	s	RESISTOR,CHIP 1.5K 1/16W(1608)
R621	1-218-674-11	s	RESISTOR CHIP 180 1/16W (1608)
R622	1-218-660-91	s	RESISTOR,CHIP 47 1/16W (1608)
R623	1-218-678-11	s	RESISTOR CHIP 270 1/16W (1608)
R624	1-218-700-11	s	RESISTOR,CHIP 2.2K 1/16W(1608)
R625	1-218-684-11	s	RESISTOR,CHIP 470 1/16W (1608)
R626	1-218-714-11	s	RESISTOR,CHIP 8.2K 1/16W(1608)
R627	1-218-716-11	s	RESISTOR,CHIP 10K 1/16W(1608)
R629	1-218-678-11	s	RESISTOR CHIP 270 1/16W (1608)
R630	1-218-678-11	s	RESISTOR CHIP 270 1/16W (1608)
R631	1-218-660-91	s	RESISTOR,CHIP 47 1/16W (1608)
R632	1-216-623-11	s	RESISTOR,CHIP 68 1/10W(2012)
R633	1-216-612-11	s	RESISTOR,CHIP 24 1/10W(2012)
R634	1-216-618-11	s	RESISTOR,CHIP 43 1/10W(2012)
R635	1-218-674-11	s	RESISTOR CHIP 180 1/16W (1608)
R636	1-216-623-11	s	RESISTOR,CHIP 68 1/10W(2012)
R637	1-216-612-11	s	RESISTOR,CHIP 24 1/10W(2012)
R638	1-216-649-11	s	RESISTOR,CHIP 820 1/10W (2012)
R639	1-218-660-91	s	RESISTOR,CHIP 47 1/16W (1608)
R640	1-218-660-91	s	RESISTOR,CHIP 47 1/16W (1608)
R641	1-218-660-91	s	RESISTOR,CHIP 47 1/16W (1608)
R642	1-216-631-11	s	RESISTOR,CHIP 150 1/10W (2012)
R643	1-216-631-11	s	RESISTOR,CHIP 150 1/10W (2012)
R644	1-218-692-11	s	RESISTOR,CHIP 1.0K 1/16W(1608)
R645	1-218-664-11	s	RESISTOR,CHIP 68 1/16W (1608)
R700	1-218-644-11	s	RESISTOR,CHIP 10 1/16W
R702	1-218-692-11	s	RESISTOR,CHIP 1.0K 1/16W(1608)
R705	1-216-864-11	s	CONDUCTOR, CHIP (1608)
R706	1-218-692-11	s	RESISTOR,CHIP 1.0K 1/16W(1608)
R707	1-218-668-11	s	RESISTOR,CHIP 100 1/16W (1608)
R710	1-216-864-11	s	CONDUCTOR, CHIP (1608)
R801	1-218-716-11	s	RESISTOR,CHIP 10K 1/16W(1608)
R802	1-218-680-11	s	RESISTOR,CHIP 330 1/16W(1608)
R803	1-218-708-11	s	RESISTOR,CHIP 4.7K 1/16W(1608)
R805	1-218-652-11	s	RESISTOR,CHIP 22 1/16W (1608)
R806	1-218-652-11	s	RESISTOR,CHIP 22 1/16W (1608)
R807	1-218-652-11	s	RESISTOR,CHIP 22 1/16W (1608)
R808	1-218-652-11	s	RESISTOR,CHIP 22 1/16W (1608)
R809	1-218-660-91	s	RESISTOR,CHIP 47 1/16W (1608)
R811	1-216-864-11	s	CONDUCTOR, CHIP (1608)
R812	1-218-644-11	s	RESISTOR,CHIP 10 1/16W

(SDI-52 BOARD [SUFFIX 15] for MSW RECORDER)

Ref. No. or Q'ty	Part No.	SP	Description
R815	1-216-864-11	s	CONDUCTOR, CHIP (1608)
R816	1-218-708-11	s	RESISTOR,CHIP 4.7K 1/16W(1608)
R818	1-216-864-11	s	CONDUCTOR, CHIP (1608)
RB100	1-239-407-11	s	NETWORK RESISTOR(CHIP) 330
RB101	1-239-407-11	s	NETWORK RESISTOR(CHIP) 330
RB102	1-239-407-11	s	NETWORK RESISTOR(CHIP) 330
RB103	1-233-936-11	s	RESISTOR,NETWORK 10 (1608)
RB104	1-233-936-11	s	RESISTOR,NETWORK 10 (1608)
RB105	1-233-936-11	s	RESISTOR,NETWORK 10 (1608)
RB106	1-233-936-11	s	RESISTOR,NETWORK 10 (1608)
RB107	1-233-936-11	s	RESISTOR,NETWORK 10 (1608)
RB301	1-239-409-11	s	RESISTOR NETWORK 47 (1608)
RB303	1-239-412-11	s	NETWORK, RESISTOR 100 (1608)
RB304	1-239-412-11	s	NETWORK, RESISTOR 100 (1608)
RB500	1-239-407-11	s	NETWORK RESISTOR(CHIP) 330
RB501	1-239-407-11	s	NETWORK RESISTOR(CHIP) 330
RB502	1-239-407-11	s	NETWORK RESISTOR(CHIP) 330
RB604	1-239-407-11	s	NETWORK RESISTOR(CHIP) 330
RB605	1-239-407-11	s	NETWORK RESISTOR(CHIP) 330
RB606	1-239-407-11	s	NETWORK RESISTOR(CHIP) 330
RB612	1-233-936-11	s	RESISTOR,NETWORK 10 (1608)
RB700	1-234-397-11	s	NETWORK, RES (8 GANG) 100K
RB701	1-234-397-11	s	NETWORK, RES (8 GANG) 100K
RB702	1-234-397-11	s	NETWORK, RES (8 GANG) 100K
RB703	1-239-711-11	s	NETWORK, RESISTOR 0 (1608)
RB704	1-239-711-11	s	NETWORK, RESISTOR 0 (1608)
RB705	1-233-936-11	s	RESISTOR,NETWORK 10 (1608)
RB706	1-233-936-11	s	RESISTOR,NETWORK 10 (1608)
RB707	1-233-936-11	s	RESISTOR,NETWORK 10 (1608)
RB708	1-233-936-11	s	RESISTOR,NETWORK 10 (1608)
RB709	1-233-665-11	s	NETWORK, RES (8 GANG) 47K
RB710	1-233-665-11	s	NETWORK, RES (8 GANG) 47K
RB711	1-233-665-11	s	NETWORK, RES (8 GANG) 47K
RB712	1-233-665-11	s	NETWORK, RES (8 GANG) 47K
RB713	1-233-665-11	s	NETWORK, RES (8 GANG) 47K
RB801	1-236-908-11	s	RESISTOR,NETWORK 10K (3216)
RB802	1-233-936-11	s	RESISTOR,NETWORK 10 (1608)
RB803	1-233-936-11	s	RESISTOR,NETWORK 10 (1608)
RB804	1-233-936-11	s	RESISTOR,NETWORK 10 (1608)
RB806	1-233-936-11	s	RESISTOR,NETWORK 10 (1608)
RB807	1-233-936-11	s	RESISTOR,NETWORK 10 (1608)
RB808	1-233-936-11	s	RESISTOR,NETWORK 10 (1608)
RB809	1-233-936-11	s	RESISTOR,NETWORK 10 (1608)
RB810	1-233-936-11	s	RESISTOR,NETWORK 10 (1608)
RB811	1-233-936-11	s	RESISTOR,NETWORK 10 (1608)
RB813	1-233-936-11	s	RESISTOR,NETWORK 10 (1608)
RB814	1-233-936-11	s	RESISTOR,NETWORK 10 (1608)
RB815	1-233-936-11	s	RESISTOR,NETWORK 10 (1608)
RB816	1-233-936-11	s	RESISTOR,NETWORK 10 (1608)
RB817	1-233-936-11	s	RESISTOR,NETWORK 10 (1608)

SDI-52 BOARD [SUFFIX 17-] for DVW and MSW RECORDER

[Lot No. 421 -] MSW-2000, M2000/P, A2000/P
[Lot No. 495 -] MSW-M2000E/P
[Lot No. 434 -] DVW-2000/P, M2000/P

Ref. No. or Q'ty	Part No.	SP	Description
1pc	A-8324-905-D	s	MOUNTED CIRCUIT BOARD, SDI-52
C100	1-128-451-11	s	CAPACITOR ELECT 22MF/16V(105C)
C101	1-107-826-11	s	CAPACITOR,CHIP CERAMIC 0.1MF
C102	1-128-590-11	s	CAPACITOR ELECT 100MF/6.3V(105
C103	1-107-826-11	s	CAPACITOR,CHIP CERAMIC 0.1MF
C104	1-107-826-11	s	CAPACITOR,CHIP CERAMIC 0.1MF
C105	1-125-827-11	s	CAPACITOR,CERAMIC 1MF/25V
C106	1-107-826-11	s	CAPACITOR,CHIP CERAMIC 0.1MF
C107	1-162-923-11	s	CAPACITOR,CERAMIC 47PF/50V CH
C108	1-128-590-11	s	CAPACITOR ELECT 100MF/6.3V(105
C109	1-107-826-11	s	CAPACITOR,CHIP CERAMIC 0.1MF
C110	1-125-827-11	s	CAPACITOR,CERAMIC 1MF/25V
C111	1-107-826-11	s	CAPACITOR,CHIP CERAMIC 0.1MF
C112	1-127-692-11	s	CAP, CHIP CERAMIC 10MF B 3216
C113	1-107-826-11	s	CAPACITOR,CHIP CERAMIC 0.1MF
C114	1-107-826-11	s	CAPACITOR,CHIP CERAMIC 0.1MF
C115	1-107-826-11	s	CAPACITOR,CHIP CERAMIC 0.1MF
C116	1-107-826-11	s	CAPACITOR,CHIP CERAMIC 0.1MF
C117	1-107-826-11	s	CAPACITOR,CHIP CERAMIC 0.1MF
C118	1-162-915-11	s	CAPACITOR,CERAMIC 10PF/50V CH
C119	1-107-826-11	s	CAPACITOR,CHIP CERAMIC 0.1MF
C120	1-107-826-11	s	CAPACITOR,CHIP CERAMIC 0.1MF
C121	1-107-826-11	s	CAPACITOR,CHIP CERAMIC 0.1MF
C122	1-165-811-11	s	CAPACITOR CHIP CERAMIC 22MF B
C123	1-165-811-11	s	CAPACITOR CHIP CERAMIC 22MF B
C124	1-107-826-11	s	CAPACITOR,CHIP CERAMIC 0.1MF
C125	1-107-826-11	s	CAPACITOR,CHIP CERAMIC 0.1MF
C126	1-107-826-11	s	CAPACITOR,CHIP CERAMIC 0.1MF
C127	1-107-826-11	s	CAPACITOR,CHIP CERAMIC 0.1MF
C128	1-107-826-11	s	CAPACITOR,CHIP CERAMIC 0.1MF
C129	1-107-826-11	s	CAPACITOR,CHIP CERAMIC 0.1MF
C130	1-107-826-11	s	CAPACITOR,CHIP CERAMIC 0.1MF
C131	1-107-826-11	s	CAPACITOR,CHIP CERAMIC 0.1MF
C132	1-107-826-11	s	CAPACITOR,CHIP CERAMIC 0.1MF
C133	1-107-826-11	s	CAPACITOR,CHIP CERAMIC 0.1MF
C134	1-107-826-11	s	CAPACITOR,CHIP CERAMIC 0.1MF
C135	1-107-826-11	s	CAPACITOR,CHIP CERAMIC 0.1MF
C136	1-107-826-11	s	CAPACITOR,CHIP CERAMIC 0.1MF
C137	1-107-826-11	s	CAPACITOR,CHIP CERAMIC 0.1MF
C138	1-107-826-11	s	CAPACITOR,CHIP CERAMIC 0.1MF
C139	1-107-826-11	s	CAPACITOR,CHIP CERAMIC 0.1MF
C140	1-107-826-11	s	CAPACITOR,CHIP CERAMIC 0.1MF
C141	1-107-826-11	s	CAPACITOR,CHIP CERAMIC 0.1MF
C142	1-162-911-11	s	CAPACITOR,CERAMIC 6PF/50V 1608
C143	1-107-826-11	s	CAPACITOR,CHIP CERAMIC 0.1MF
C144	1-107-826-11	s	CAPACITOR,CHIP CERAMIC 0.1MF
C145	1-107-826-11	s	CAPACITOR,CHIP CERAMIC 0.1MF
C146	1-107-826-11	s	CAPACITOR,CHIP CERAMIC 0.1MF
C147	1-107-826-11	s	CAPACITOR,CHIP CERAMIC 0.1MF
C148	1-165-811-11	s	CAPACITOR CHIP CERAMIC 22MF B
C149	1-162-907-11	s	CAPACITOR,CERAMIC 2PF/50V(CK)
C150	1-107-826-11	s	CAPACITOR,CHIP CERAMIC 0.1MF
C151	1-107-826-11	s	CAPACITOR,CHIP CERAMIC 0.1MF
C152	1-125-891-11	s	CAPACITOR CERAMIC 0.47MF/10V
C153	1-107-826-11	s	CAPACITOR,CHIP CERAMIC 0.1MF
C154	1-107-826-11	s	CAPACITOR,CHIP CERAMIC 0.1MF

(SDI-52 BOARD [SUFFIX 17-] for DVW and MSW RECORDER)

Ref. No. or Q'ty	Part No.	SP	Description
C155	1-107-826-11	s	CAPACITOR,CHIP CERAMIC 0.1MF
C156	1-107-826-11	s	CAPACITOR,CHIP CERAMIC 0.1MF
C157	1-107-826-11	s	CAPACITOR,CHIP CERAMIC 0.1MF
C300	1-107-826-11	s	CAPACITOR,CHIP CERAMIC 0.1MF
C301	1-107-826-11	s	CAPACITOR,CHIP CERAMIC 0.1MF
C302	1-107-826-11	s	CAPACITOR,CHIP CERAMIC 0.1MF
C303	1-107-826-11	s	CAPACITOR,CHIP CERAMIC 0.1MF
C304	1-107-826-11	s	CAPACITOR,CHIP CERAMIC 0.1MF
C305	1-107-826-11	s	CAPACITOR,CHIP CERAMIC 0.1MF
C306	1-107-826-11	s	CAPACITOR,CHIP CERAMIC 0.1MF
C307	1-164-230-11	s	CAPACITOR,CERAMIC 220PF/50V
C308	1-107-826-11	s	CAPACITOR,CHIP CERAMIC 0.1MF
C309	1-107-826-11	s	CAPACITOR,CHIP CERAMIC 0.1MF
C310	1-107-826-11	s	CAPACITOR,CHIP CERAMIC 0.1MF
C311	1-125-889-11	s	CAPACITOR, CERAMIC 2.2MF
C312	1-127-692-11	s	CAP, CHIP CERAMIC 10MF B 3216
C313	1-127-692-11	s	CAP, CHIP CERAMIC 10MF B 3216
C314	1-128-590-11	s	CAPACITOR ELECT 100MF/6.3V(105
C315	1-107-826-11	s	CAPACITOR,CHIP CERAMIC 0.1MF
C316	1-128-590-11	s	CAPACITOR ELECT 100MF/6.3V(105
C317	1-107-826-11	s	CAPACITOR,CHIP CERAMIC 0.1MF
C318	1-165-811-11	s	CAPACITOR CHIP CERAMIC 22MF B
C502	1-107-826-11	s	CAPACITOR,CHIP CERAMIC 0.1MF
C503	1-107-826-11	s	CAPACITOR,CHIP CERAMIC 0.1MF
C504	1-107-826-11	s	CAPACITOR,CHIP CERAMIC 0.1MF
C505	1-107-826-11	s	CAPACITOR,CHIP CERAMIC 0.1MF
C506	1-128-451-11	s	CAPACITOR ELECT 22MF/16V(105C)
C507	1-128-590-11	s	CAPACITOR ELECT 100MF/6.3V(105
C508	1-107-826-11	s	CAPACITOR,CHIP CERAMIC 0.1MF
C509	1-107-826-11	s	CAPACITOR,CHIP CERAMIC 0.1MF
C510	1-107-826-11	s	CAPACITOR,CHIP CERAMIC 0.1MF
C511	1-128-590-11	s	CAPACITOR ELECT 100MF/6.3V(105
C512	1-107-826-11	s	CAPACITOR,CHIP CERAMIC 0.1MF
C513	1-165-811-11	s	CAPACITOR CHIP CERAMIC 22MF B
C514	1-107-826-11	s	CAPACITOR,CHIP CERAMIC 0.1MF
C515	1-107-826-11	s	CAPACITOR,CHIP CERAMIC 0.1MF
C516	1-107-826-11	s	CAPACITOR,CHIP CERAMIC 0.1MF
C517	1-107-826-11	s	CAPACITOR,CHIP CERAMIC 0.1MF
C518	1-107-826-11	s	CAPACITOR,CHIP CERAMIC 0.1MF
C519	1-107-826-11	s	CAPACITOR,CHIP CERAMIC 0.1MF
C520	1-107-826-11	s	CAPACITOR,CHIP CERAMIC 0.1MF
C521	1-107-826-11	s	CAPACITOR,CHIP CERAMIC 0.1MF
C522	1-107-826-11	s	CAPACITOR,CHIP CERAMIC 0.1MF
C523	1-107-826-11	s	CAPACITOR,CHIP CERAMIC 0.1MF
C524	1-107-826-11	s	CAPACITOR,CHIP CERAMIC 0.1MF
C525	1-165-811-11	s	CAPACITOR CHIP CERAMIC 22MF B
C526	1-162-915-11	s	CAPACITOR,CERAMIC 10PF/50V CH
C527	1-107-826-11	s	CAPACITOR,CHIP CERAMIC 0.1MF
C528	1-107-826-11	s	CAPACITOR,CHIP CERAMIC 0.1MF
C529	1-107-826-11	s	CAPACITOR,CHIP CERAMIC 0.1MF
C530	1-107-826-11	s	CAPACITOR,CHIP CERAMIC 0.1MF
C531	1-107-826-11	s	CAPACITOR,CHIP CERAMIC 0.1MF
C532	1-107-826-11	s	CAPACITOR,CHIP CERAMIC 0.1MF
C533	1-107-826-11	s	CAPACITOR,CHIP CERAMIC 0.1MF
C534	1-107-826-11	s	CAPACITOR,CHIP CERAMIC 0.1MF
C535	1-107-826-11	s	CAPACITOR,CHIP CERAMIC 0.1MF
C536	1-107-826-11	s	CAPACITOR,CHIP CERAMIC 0.1MF
C537	1-107-826-11	s	CAPACITOR,CHIP CERAMIC 0.1MF
C539	1-107-826-11	s	CAPACITOR,CHIP CERAMIC 0.1MF

(SDI-52 BOARD [SUFFIX 17-] for DVW and MSW RECORDER)

Ref. No. or Q'ty	Part No.	SP	Description
C540	1-162-911-11	s	CAPACITOR,CERAMIC 6PF/50V 1608
C542	1-107-826-11	s	CAPACITOR,CHIP CERAMIC 0.1MF
C543	1-107-826-11	s	CAPACITOR,CHIP CERAMIC 0.1MF
C544	1-107-826-11	s	CAPACITOR,CHIP CERAMIC 0.1MF
C545	1-107-826-11	s	CAPACITOR,CHIP CERAMIC 0.1MF
C547	1-107-826-11	s	CAPACITOR,CHIP CERAMIC 0.1MF
C548	1-107-826-11	s	CAPACITOR,CHIP CERAMIC 0.1MF
C549	1-165-811-11	s	CAPACITOR CHIP CERAMIC 22MF B
C551	1-162-907-11	s	CAPACITOR,CERAMIC 2PF/50V(CK)
C552	1-162-907-11	s	CAPACITOR,CERAMIC 2PF/50V(CK)
C600	1-107-826-11	s	CAPACITOR,CHIP CERAMIC 0.1MF
C601	1-107-826-11	s	CAPACITOR,CHIP CERAMIC 0.1MF
C602	1-107-826-11	s	CAPACITOR,CHIP CERAMIC 0.1MF
C603	1-107-826-11	s	CAPACITOR,CHIP CERAMIC 0.1MF
C604	1-128-451-11	s	CAPACITOR ELECT 22MF/16V(105C)
C605	1-128-590-11	s	CAPACITOR ELECT 100MF/6.3V(105
C606	1-107-826-11	s	CAPACITOR,CHIP CERAMIC 0.1MF
C607	1-107-826-11	s	CAPACITOR,CHIP CERAMIC 0.1MF
C608	1-107-826-11	s	CAPACITOR,CHIP CERAMIC 0.1MF
C609	1-128-590-11	s	CAPACITOR ELECT 100MF/6.3V(105
C610	1-107-826-11	s	CAPACITOR,CHIP CERAMIC 0.1MF
C611	1-165-811-11	s	CAPACITOR CHIP CERAMIC 22MF B
C612	1-107-826-11	s	CAPACITOR,CHIP CERAMIC 0.1MF
C613	1-107-826-11	s	CAPACITOR,CHIP CERAMIC 0.1MF
C614	1-107-826-11	s	CAPACITOR,CHIP CERAMIC 0.1MF
C615	1-107-826-11	s	CAPACITOR,CHIP CERAMIC 0.1MF
C616	1-107-826-11	s	CAPACITOR,CHIP CERAMIC 0.1MF
C617	1-107-826-11	s	CAPACITOR,CHIP CERAMIC 0.1MF
C618	1-107-826-11	s	CAPACITOR,CHIP CERAMIC 0.1MF
C619	1-107-826-11	s	CAPACITOR,CHIP CERAMIC 0.1MF
C620	1-107-826-11	s	CAPACITOR,CHIP CERAMIC 0.1MF
C621	1-107-826-11	s	CAPACITOR,CHIP CERAMIC 0.1MF
C622	1-107-826-11	s	CAPACITOR,CHIP CERAMIC 0.1MF
C623	1-165-811-11	s	CAPACITOR CHIP CERAMIC 22MF B
C624	1-162-915-11	s	CAPACITOR,CERAMIC 10PF/50V CH
C625	1-107-826-11	s	CAPACITOR,CHIP CERAMIC 0.1MF
C626	1-107-826-11	s	CAPACITOR,CHIP CERAMIC 0.1MF
C627	1-107-826-11	s	CAPACITOR,CHIP CERAMIC 0.1MF
C628	1-107-826-11	s	CAPACITOR,CHIP CERAMIC 0.1MF
C629	1-107-826-11	s	CAPACITOR,CHIP CERAMIC 0.1MF
C630	1-107-826-11	s	CAPACITOR,CHIP CERAMIC 0.1MF
C631	1-107-826-11	s	CAPACITOR,CHIP CERAMIC 0.1MF
C632	1-107-826-11	s	CAPACITOR,CHIP CERAMIC 0.1MF
C633	1-107-826-11	s	CAPACITOR,CHIP CERAMIC 0.1MF
C634	1-107-826-11	s	CAPACITOR,CHIP CERAMIC 0.1MF
C635	1-107-826-11	s	CAPACITOR,CHIP CERAMIC 0.1MF
C636	1-107-826-11	s	CAPACITOR,CHIP CERAMIC 0.1MF
C637	1-162-911-11	s	CAPACITOR,CERAMIC 6PF/50V 1608
C638	1-107-826-11	s	CAPACITOR,CHIP CERAMIC 0.1MF
C639	1-107-826-11	s	CAPACITOR,CHIP CERAMIC 0.1MF
C640	1-107-826-11	s	CAPACITOR,CHIP CERAMIC 0.1MF
C641	1-107-826-11	s	CAPACITOR,CHIP CERAMIC 0.1MF
C642	1-107-826-11	s	CAPACITOR,CHIP CERAMIC 0.1MF
C643	1-165-811-11	s	CAPACITOR CHIP CERAMIC 22MF B
C644	1-162-907-11	s	CAPACITOR,CERAMIC 2PF/50V(CK)
C700	1-107-826-11	s	CAPACITOR,CHIP CERAMIC 0.1MF
C701	1-107-826-11	s	CAPACITOR,CHIP CERAMIC 0.1MF
C702	1-107-826-11	s	CAPACITOR,CHIP CERAMIC 0.1MF
C703	1-107-826-11	s	CAPACITOR,CHIP CERAMIC 0.1MF

(SDI-52 BOARD [SUFFIX 17-] for DVW and MSW RECORDER)

Ref. No. or Q'ty	Part No.	SP	Description
C704	1-107-826-11	s	CAPACITOR,CHIP CERAMIC 0.1MF
C705	1-107-826-11	s	CAPACITOR,CHIP CERAMIC 0.1MF
C706	1-107-826-11	s	CAPACITOR,CHIP CERAMIC 0.1MF
C707	1-107-826-11	s	CAPACITOR,CHIP CERAMIC 0.1MF
C708	1-107-826-11	s	CAPACITOR,CHIP CERAMIC 0.1MF
C709	1-107-826-11	s	CAPACITOR,CHIP CERAMIC 0.1MF
C710	1-107-826-11	s	CAPACITOR,CHIP CERAMIC 0.1MF
C713	1-107-826-11	s	CAPACITOR,CHIP CERAMIC 0.1MF
C714	1-107-826-11	s	CAPACITOR,CHIP CERAMIC 0.1MF
C801	1-131-992-11	s	CAP, CERAMIC 100000PF F 1608
C802	1-131-992-11	s	CAP, CERAMIC 100000PF F 1608
C803	1-131-992-11	s	CAP, CERAMIC 100000PF F 1608
C804	1-131-992-11	s	CAP, CERAMIC 100000PF F 1608
C805	1-131-992-11	s	CAP, CERAMIC 100000PF F 1608
C806	1-131-992-11	s	CAP, CERAMIC 100000PF F 1608
C807	1-131-992-11	s	CAP, CERAMIC 100000PF F 1608
C808	1-131-992-11	s	CAP, CERAMIC 100000PF F 1608
C809	1-131-992-11	s	CAP, CERAMIC 100000PF F 1608
C810	1-127-760-11	s	CAPACITOR,CERAMIC 4.7MF/6.3V
C811	1-128-590-11	s	CAPACITOR ELECT 100MF/6.3V(105
C812	1-131-992-11	s	CAP, CERAMIC 100000PF F 1608
C813	1-131-992-11	s	CAP, CERAMIC 100000PF F 1608
C814	1-131-992-11	s	CAP, CERAMIC 100000PF F 1608
C815	1-131-992-11	s	CAP, CERAMIC 100000PF F 1608
C816	1-131-992-11	s	CAP, CERAMIC 100000PF F 1608
C817	1-131-992-11	s	CAP, CERAMIC 100000PF F 1608
C818	1-131-992-11	s	CAP, CERAMIC 100000PF F 1608
C819	1-131-992-11	s	CAP, CERAMIC 100000PF F 1608
C820	1-131-992-11	s	CAP, CERAMIC 100000PF F 1608
C821	1-131-992-11	s	CAP, CERAMIC 100000PF F 1608
C822	1-131-992-11	s	CAP, CERAMIC 100000PF F 1608
C823	1-131-992-11	s	CAP, CERAMIC 100000PF F 1608
C824	1-131-992-11	s	CAP, CERAMIC 100000PF F 1608
CN100	1-764-243-11	o	CONNECTOR (COAXIAL)
CN101	1-764-243-11	o	CONNECTOR (COAXIAL)
CN500	1-764-243-11	o	CONNECTOR (COAXIAL)
CN501	1-764-243-11	o	CONNECTOR (COAXIAL)
CN600	1-764-243-11	o	CONNECTOR (COAXIAL)
CN800	1-580-789-91	s	PIN, CONNECTOR 6P
D300	8-719-975-40	s	DIODE RB411D (RECTI)
D301	8-719-975-40	s	DIODE RB411D (RECTI)
D700	8-719-064-52	s	DIODE CL-191YG-CD-T
D701	8-719-064-52	s	DIODE CL-191YG-CD-T
D800	8-719-820-41	s	DIODE 1SS302
E700	1-535-877-22	s	CHIP,CHECKER (TEST POINT)
E701	1-535-877-22	s	CHIP,CHECKER (TEST POINT)
E702	1-535-877-22	s	CHIP,CHECKER (TEST POINT)
E703	1-535-877-22	s	CHIP,CHECKER (TEST POINT)
E704	1-535-877-22	s	CHIP,CHECKER (TEST POINT)
E705	1-535-877-22	s	CHIP,CHECKER (TEST POINT)
E706	1-535-877-22	s	CHIP,CHECKER (TEST POINT)
E707	1-535-877-22	s	CHIP,CHECKER (TEST POINT)
FB100	1-414-864-11	s	INDUCTOR, MICRO (CHIP TYPE)
FB101	1-414-864-11	s	INDUCTOR, MICRO (CHIP TYPE)
FB102	1-414-864-11	s	INDUCTOR, MICRO (CHIP TYPE)
FB103	1-414-864-11	s	INDUCTOR, MICRO (CHIP TYPE)
FB104	1-414-864-11	s	INDUCTOR, MICRO (CHIP TYPE)

(SDI-52 BOARD [SUFFIX 17-] for DVW and MSW RECORDER)

Ref. No. or Q'ty	Part No.	SP	Description
FB105	1-414-864-11	s	INDUCTOR, MICRO (CHIP TYPE)
FB106	1-414-864-11	s	INDUCTOR, MICRO (CHIP TYPE)
FB500	1-414-864-11	s	INDUCTOR, MICRO (CHIP TYPE)
FB501	1-414-864-11	s	INDUCTOR, MICRO (CHIP TYPE)
FB502	1-414-864-11	s	INDUCTOR, MICRO (CHIP TYPE)
FB503	1-414-864-11	s	INDUCTOR, MICRO (CHIP TYPE)
FB504	1-414-864-11	s	INDUCTOR, MICRO (CHIP TYPE)
FB505	1-414-864-11	s	INDUCTOR, MICRO (CHIP TYPE)
FB600	1-414-864-11	s	INDUCTOR, MICRO (CHIP TYPE)
FB601	1-414-864-11	s	INDUCTOR, MICRO (CHIP TYPE)
FB602	1-414-864-11	s	INDUCTOR, MICRO (CHIP TYPE)
FB603	1-414-864-11	s	INDUCTOR, MICRO (CHIP TYPE)
FB604	1-414-864-11	s	INDUCTOR, MICRO (CHIP TYPE)
FB605	1-414-864-11	s	INDUCTOR, MICRO (CHIP TYPE)
IC100	8-759-337-40	s	IC NJM2904V(TE2)
IC101	8-759-533-85	s	IC L88M05T-FA-TL
IC102	8-759-460-72	s	IC BA033FP
IC103	8-752-078-34	s	IC CXB1342R
IC104	8-759-549-15	s	IC SN74LV245APWR
IC105	8-759-549-15	s	IC SN74LV245APWR
IC107	8-759-523-84	s	IC TC74VHC14FT (EL)
IC108	8-759-523-95	s	IC TC74VHC74FT(EL)
IC109	8-759-523-94	s	IC TC74VHC32FT(EL)
IC300	8-759-392-77	s	IC SN74LVC245APW (E20)
IC302	8-759-491-46	s	IC TC74VHCT04AFT (EL)
IC303	8-759-524-09	s	IC TC74VHC153FT (EL)
IC304	8-759-523-95	s	IC TC74VHC74FT(EL)
IC305	8-759-392-01	s	IC TC7SH86FU (TE85R)
IC306	8-759-524-49	s	IC TC74VHC540FT (EL)
IC307	8-759-832-05	s	IC BA18BC0FP-E2
IC502	8-759-549-15	s	IC SN74LV245APWR
IC503	8-759-549-15	s	IC SN74LV245APWR
IC504	8-759-533-85	s	IC L88M05T-FA-TL
IC505	8-759-337-40	s	IC NJM2904V(TE2)
IC506	8-759-460-72	s	IC BA033FP
IC507	8-752-078-32	s	IC CXB1341R
IC600	8-759-549-15	s	IC SN74LV245APWR
IC601	8-759-549-15	s	IC SN74LV245APWR
IC602	8-759-533-85	s	IC L88M05T-FA-TL
IC604	8-759-460-72	s	IC BA033FP
IC605	8-752-078-32	s	IC CXB1341R
IC606	8-759-337-40	s	IC NJM2904V(TE2)
IC700	8-759-491-46	s	IC TC74VHCT04AFT (EL)
IC701	8-759-524-07	s	IC TC74VHC138FT(EL)
IC704	8-752-392-03	s	IC CXD1095BR
IC707	8-759-523-81	s	IC TC74VHC08FT(EL)
IC801	6-802-601-02	s	IC XC18V02-SDI52-V100
IC802	6-705-983-01	s	IC IS42S32200B-6TL-TR
IC804	8-749-018-41	s	IC SI-3025LSA-TL
IC806	8-759-524-27	s	IC TC74VHC244FT(EL)
IC807	8-759-491-46	s	IC TC74VHCT04AFT (EL)
L100	1-410-797-11	s	CHIP INDUCTOR 0.015UH (3225)
L300	1-416-344-11	s	COIL, CHOKE 10UH
Q1	8-729-928-81	s	TRANSISTOR DTC144EE
Q100	8-729-140-63	s	TRANSISTOR 2SA1611-M5M6
Q101	8-729-043-92	s	TRANSISTOR 2SC5084-0(TE85L)
Q102	8-729-043-92	s	TRANSISTOR 2SC5084-0(TE85L)
Q103	8-729-043-92	s	TRANSISTOR 2SC5084-0(TE85L)

(SDI-52 BOARD [SUFFIX 17-] for DVW and MSW RECORDER)

Ref. No. or Q'ty	Part No.	SP	Description
Q104	8-729-043-92	s	TRANSISTOR 2SC5084-0(TE85L)
Q500	8-729-140-63	s	TRANSISTOR 2SA1611-M5M6
Q501	8-729-105-68	s	TRANSISTOR 2SC3356-K
Q502	8-729-105-68	s	TRANSISTOR 2SC3356-K
Q503	8-729-043-92	s	TRANSISTOR 2SC5084-0(TE85L)
Q505	8-729-043-92	s	TRANSISTOR 2SC5084-0(TE85L)
Q508	8-729-043-92	s	TRANSISTOR 2SC5084-0(TE85L)
Q510	8-729-043-92	s	TRANSISTOR 2SC5084-0(TE85L)
Q600	8-729-140-63	s	TRANSISTOR 2SA1611-M5M6
Q601	8-729-105-68	s	TRANSISTOR 2SC3356-K
Q602	8-729-105-68	s	TRANSISTOR 2SC3356-K
Q603	8-729-043-92	s	TRANSISTOR 2SC5084-0(TE85L)
Q604	8-729-043-92	s	TRANSISTOR 2SC5084-0(TE85L)
Q605	8-729-043-92	s	TRANSISTOR 2SC5084-0(TE85L)
Q606	8-729-043-92	s	TRANSISTOR 2SC5084-0(TE85L)
R100	1-218-823-11	s	RESISTOR,CHIP 100 1/10W (1608)
R101	1-218-866-11	s	RESISTOR,CHIP 6.2K 1/10W(1608)
R102	1-218-854-11	s	RESISTOR,CHIP 2K 1/10W (1608)
R103	1-218-865-11	s	RESISTOR,CHIP 5.6K 1/10W(1608)
R104	1-218-833-11	s	RESISTOR,CHIP 270 1/10W (1608)
R105	1-211-990-11	s	RESISTOR,CHIP 75 1/10W (1608)
R106	1-211-985-11	s	RESISTOR,CHIP 47 1/10W (1608)
R107	1-218-867-11	s	RESISTOR,CHIP 6.8K 1/10W(1608)
R109	1-218-839-11	s	RESISTOR,CHIP 470 1/10W (1608)
R110	1-218-873-11	s	RESISTOR,CHIP 12K 1/10W (1608)
R112	1-218-833-11	s	RESISTOR,CHIP 270 1/10W (1608)
R115	1-218-839-11	s	RESISTOR,CHIP 470 1/10W (1608)
R116	1-211-990-11	s	RESISTOR,CHIP 75 1/10W (1608)
R117	1-211-990-11	s	RESISTOR,CHIP 75 1/10W (1608)
R118	1-218-835-11	s	RESISTOR,CHIP 330 1/10W (1608)
R119	1-218-835-11	s	RESISTOR,CHIP 330 1/10W (1608)
R120	1-218-855-11	s	RESISTOR,CHIP 2.2K 1/10W(1608)
R121	1-218-855-11	s	RESISTOR,CHIP 2.2K 1/10W(1608)
R122	1-218-855-11	s	RESISTOR,CHIP 2.2K 1/10W(1608)
R124	1-218-833-11	s	RESISTOR,CHIP 270 1/10W (1608)
R125	1-218-833-11	s	RESISTOR,CHIP 270 1/10W (1608)
R126	1-211-985-11	s	RESISTOR,CHIP 47 1/10W (1608)
R127	1-211-989-11	s	RESISTOR,CHIP 68 1/10W (1608)
R128	1-211-978-11	s	RESISTOR,CHIP 24 1/10W (1608)
R129	1-211-984-11	s	RESISTOR,CHIP 43 1/10W (1608)
R130	1-218-829-11	s	RESISTOR,CHIP 180 1/10W (1608)
R131	1-211-985-11	s	RESISTOR,CHIP 47 1/10W (1608)
R132	1-211-989-11	s	RESISTOR,CHIP 68 1/10W (1608)
R133	1-211-978-11	s	RESISTOR,CHIP 24 1/10W (1608)
R134	1-218-845-11	s	RESISTOR,CHIP 820 1/10W (1608)
R135	1-216-864-11	s	CONDUCTOR, CHIP (1608)
R136	1-216-864-11	s	CONDUCTOR, CHIP (1608)
R137	1-211-985-11	s	RESISTOR,CHIP 47 1/10W (1608)
R138	1-211-985-11	s	RESISTOR,CHIP 47 1/10W (1608)
R139	1-211-985-11	s	RESISTOR,CHIP 47 1/10W (1608)
R141	1-218-827-11	s	RESISTOR,CHIP 150 1/10W (1608)
R142	1-218-827-11	s	RESISTOR,CHIP 150 1/10W (1608)
R143	1-218-847-11	s	RESISTOR, CHIP 1K 1/10W (1608)
R144	1-211-989-11	s	RESISTOR,CHIP 68 1/10W (1608)
R145	1-211-985-11	s	RESISTOR,CHIP 47 1/10W (1608)
R146	1-218-855-11	s	RESISTOR,CHIP 2.2K 1/10W(1608)
R147	1-218-873-11	s	RESISTOR,CHIP 12K 1/10W (1608)
R148	1-218-911-11	s	RESISTOR,CHIP 470K 1/10W(1608)
R151	1-218-895-11	s	RESISTOR,CHIP 100K 1/10W(1608)

(SDI-52 BOARD [SUFFIX 17-] for DVW and MSW RECORDER)

Ref. No. or Q'ty	Part No.	SP	Description
R300	1-211-969-11	s	RESISTOR,CHIP 10 1/10W (1608)
R304	1-216-864-11	s	CONDUCTOR, CHIP (1608)
R305	1-216-864-11	s	CONDUCTOR, CHIP (1608)
R309	1-216-864-11	s	CONDUCTOR, CHIP (1608)
R313	1-211-969-11	s	RESISTOR,CHIP 10 1/10W (1608)
R314	1-211-969-11	s	RESISTOR,CHIP 10 1/10W (1608)
R315	1-211-985-11	s	RESISTOR,CHIP 47 1/10W (1608)
R316	1-216-864-11	s	CONDUCTOR, CHIP (1608)
R317	1-216-864-11	s	CONDUCTOR, CHIP (1608)
R321	1-216-864-11	s	CONDUCTOR, CHIP (1608)
R323	1-218-877-11	s	RESISTOR,CHIP 18K 1/10W (1608)
R324	1-218-895-11	s	RESISTOR,CHIP 100K 1/10W(1608)
R325	1-218-895-11	s	RESISTOR,CHIP 100K 1/10W(1608)
R326	1-218-895-11	s	RESISTOR,CHIP 100K 1/10W(1608)
R327	1-218-446-11	s	RESISTOR,CHIP 1 (1608)
R328	1-218-446-11	s	RESISTOR,CHIP 1 (1608)
R500	1-218-883-11	s	RESISTOR,CHIP 33K 1/10W (1608)
R501	1-218-883-11	s	RESISTOR,CHIP 33K 1/10W (1608)
R502	1-218-831-11	s	RESISTOR, CHIP 220 1/10W(1608)
R503	1-218-831-11	s	RESISTOR, CHIP 220 1/10W(1608)
R507	1-211-985-11	s	RESISTOR,CHIP 47 1/10W (1608)
R508	1-218-823-11	s	RESISTOR,CHIP 100 1/10W (1608)
R509	1-218-866-11	s	RESISTOR,CHIP 6.2K 1/10W(1608)
R510	1-218-856-11	s	RESISTOR,CHIP 2.4K 1/10W(1608)
R511	1-218-865-11	s	RESISTOR,CHIP 5.6K 1/10W(1608)
R512	1-218-823-11	s	RESISTOR,CHIP 100 1/10W (1608)
R513	1-218-875-11	s	RESISTOR,CHIP 15K 1/10W (1608)
R514	1-218-875-11	s	RESISTOR,CHIP 15K 1/10W (1608)
R515	1-211-985-11	s	RESISTOR,CHIP 47 1/10W (1608)
R516	1-218-867-11	s	RESISTOR,CHIP 6.8K 1/10W(1608)
R517	1-218-855-11	s	RESISTOR,CHIP 2.2K 1/10W(1608)
R518	1-218-873-11	s	RESISTOR,CHIP 12K 1/10W (1608)
R519	1-211-985-11	s	RESISTOR,CHIP 47 1/10W (1608)
R520	1-218-847-11	s	RESISTOR, CHIP 1K 1/10W (1608)
R522	1-211-985-11	s	RESISTOR,CHIP 47 1/10W (1608)
R523	1-218-855-11	s	RESISTOR,CHIP 2.2K 1/10W(1608)
R524	1-218-851-11	s	RESISTOR,CHIP 1.5K 1/10W(1608)
R525	1-211-976-11	s	RESISTOR,CHIP 20 1/10W (1608)
R526	1-211-984-11	s	RESISTOR,CHIP 43 1/10W (1608)
R527	1-218-833-11	s	RESISTOR,CHIP 270 1/10W (1608)
R528	1-218-855-11	s	RESISTOR,CHIP 2.2K 1/10W(1608)
R529	1-218-839-11	s	RESISTOR,CHIP 470 1/10W (1608)
R530	1-218-866-11	s	RESISTOR,CHIP 6.2K 1/10W(1608)
R531	1-218-871-11	s	RESISTOR,CHIP 10K 1/10W (1608)
R533	1-218-833-11	s	RESISTOR,CHIP 270 1/10W (1608)
R534	1-218-833-11	s	RESISTOR,CHIP 270 1/10W (1608)
R535	1-211-985-11	s	RESISTOR,CHIP 47 1/10W (1608)
R537	1-211-989-11	s	RESISTOR,CHIP 68 1/10W (1608)
R538	1-211-978-11	s	RESISTOR,CHIP 24 1/10W (1608)
R539	1-211-984-11	s	RESISTOR,CHIP 43 1/10W (1608)
R542	1-218-829-11	s	RESISTOR,CHIP 180 1/10W (1608)
R544	1-211-989-11	s	RESISTOR,CHIP 68 1/10W (1608)
R545	1-211-978-11	s	RESISTOR,CHIP 24 1/10W (1608)
R546	1-218-845-11	s	RESISTOR,CHIP 820 1/10W (1608)
R549	1-211-969-11	s	RESISTOR,CHIP 10 1/10W (1608)
R550	1-211-969-11	s	RESISTOR,CHIP 10 1/10W (1608)
R551	1-211-985-11	s	RESISTOR,CHIP 47 1/10W (1608)
R554	1-218-827-11	s	RESISTOR,CHIP 150 1/10W (1608)
R557	1-218-827-11	s	RESISTOR,CHIP 150 1/10W (1608)

(SDI-52 BOARD [SUFFIX 17-] for DVW and MSW RECORDER)

Ref. No. or Q'ty	Part No.	SP	Description
R558	1-218-847-11	s	RESISTOR, CHIP 1K 1/10W (1608)
R559	1-218-847-11	s	RESISTOR, CHIP 1K 1/10W (1608)
R560	1-211-989-11	s	RESISTOR,CHIP 68 1/10W (1608)
R561	1-211-989-11	s	RESISTOR,CHIP 68 1/10W (1608)
R600	1-211-985-11	s	RESISTOR,CHIP 47 1/10W (1608)
R603	1-211-985-11	s	RESISTOR,CHIP 47 1/10W (1608)
R604	1-218-823-11	s	RESISTOR,CHIP 100 1/10W (1608)
R605	1-218-866-11	s	RESISTOR,CHIP 6.2K 1/10W(1608)
R606	1-218-856-11	s	RESISTOR,CHIP 2.4K 1/10W(1608)
R607	1-218-865-11	s	RESISTOR,CHIP 5.6K 1/10W(1608)
R608	1-218-833-11	s	RESISTOR,CHIP 270 1/10W (1608)
R609	1-218-875-11	s	RESISTOR,CHIP 15K 1/10W (1608)
R610	1-218-875-11	s	RESISTOR,CHIP 15K 1/10W (1608)
R611	1-211-985-11	s	RESISTOR,CHIP 47 1/10W (1608)
R612	1-218-867-11	s	RESISTOR,CHIP 6.8K 1/10W(1608)
R613	1-218-855-11	s	RESISTOR,CHIP 2.2K 1/10W(1608)
R614	1-218-873-11	s	RESISTOR,CHIP 12K 1/10W (1608)
R615	1-211-985-11	s	RESISTOR,CHIP 47 1/10W (1608)
R616	1-218-847-11	s	RESISTOR, CHIP 1K 1/10W (1608)
R618	1-211-985-11	s	RESISTOR,CHIP 47 1/10W (1608)
R619	1-218-855-11	s	RESISTOR,CHIP 2.2K 1/10W(1608)
R620	1-218-851-11	s	RESISTOR,CHIP 1.5K 1/10W(1608)
R621	1-211-976-11	s	RESISTOR,CHIP 20 1/10W (1608)
R622	1-211-984-11	s	RESISTOR,CHIP 43 1/10W (1608)
R623	1-218-833-11	s	RESISTOR,CHIP 270 1/10W (1608)
R624	1-218-855-11	s	RESISTOR,CHIP 2.2K 1/10W(1608)
R625	1-218-839-11	s	RESISTOR,CHIP 470 1/10W (1608)
R626	1-218-866-11	s	RESISTOR,CHIP 6.2K 1/10W(1608)
R627	1-218-871-11	s	RESISTOR,CHIP 10K 1/10W (1608)
R629	1-218-833-11	s	RESISTOR,CHIP 270 1/10W (1608)
R630	1-218-833-11	s	RESISTOR,CHIP 270 1/10W (1608)
R631	1-211-985-11	s	RESISTOR,CHIP 47 1/10W (1608)
R632	1-211-989-11	s	RESISTOR,CHIP 68 1/10W (1608)
R633	1-211-978-11	s	RESISTOR,CHIP 24 1/10W (1608)
R634	1-211-984-11	s	RESISTOR,CHIP 43 1/10W (1608)
R635	1-218-829-11	s	RESISTOR,CHIP 180 1/10W (1608)
R636	1-211-989-11	s	RESISTOR,CHIP 68 1/10W (1608)
R637	1-211-978-11	s	RESISTOR,CHIP 24 1/10W (1608)
R638	1-218-845-11	s	RESISTOR,CHIP 820 1/10W (1608)
R639	1-211-985-11	s	RESISTOR,CHIP 47 1/10W (1608)
R640	1-211-985-11	s	RESISTOR,CHIP 47 1/10W (1608)
R641	1-211-985-11	s	RESISTOR,CHIP 47 1/10W (1608)
R642	1-218-827-11	s	RESISTOR,CHIP 150 1/10W (1608)
R643	1-218-827-11	s	RESISTOR,CHIP 150 1/10W (1608)
R644	1-218-847-11	s	RESISTOR, CHIP 1K 1/10W (1608)
R645	1-211-989-11	s	RESISTOR,CHIP 68 1/10W (1608)
R700	1-211-969-11	s	RESISTOR,CHIP 10 1/10W (1608)
R702	1-218-847-11	s	RESISTOR, CHIP 1K 1/10W (1608)
R705	1-216-864-11	s	CONDUCTOR, CHIP (1608)
R706	1-218-847-11	s	RESISTOR, CHIP 1K 1/10W (1608)
R707	1-218-823-11	s	RESISTOR,CHIP 100 1/10W (1608)
R710	1-216-864-11	s	CONDUCTOR, CHIP (1608)
R801	1-218-871-11	s	RESISTOR,CHIP 10K 1/10W (1608)
R802	1-218-835-11	s	RESISTOR,CHIP 330 1/10W (1608)
R803	1-218-863-11	s	RESISTOR,CHIP 4.7K 1/10W(1608)
R805	1-211-977-11	s	RESISTOR,CHIP 22 1/10W (1608)
R806	1-211-977-11	s	RESISTOR,CHIP 22 1/10W (1608)
R807	1-211-977-11	s	RESISTOR,CHIP 22 1/10W (1608)
R808	1-211-977-11	s	RESISTOR,CHIP 22 1/10W (1608)

(SDI-52 BOARD [SUFFIX 17-] for DVW and MSW RECORDER)

Ref. No. or Q'ty	Part No.	SP	Description
R809	1-211-985-11	s	RESISTOR,CHIP 47 1/10W (1608)
R811	1-216-864-11	s	CONDUCTOR, CHIP (1608)
R812	1-211-969-11	s	RESISTOR,CHIP 10 1/10W (1608)
R815	1-216-864-11	s	CONDUCTOR, CHIP (1608)
R816	1-218-863-11	s	RESISTOR,CHIP 4.7K 1/10W(1608)
R818	1-216-864-11	s	CONDUCTOR, CHIP (1608)
RB100	1-233-411-11	s	RESISTOR,CHIP NETWORK 220/3216
RB101	1-233-411-11	s	RESISTOR,CHIP NETWORK 220/3216
RB102	1-233-411-11	s	RESISTOR,CHIP NETWORK 220/3216
RB103	1-233-574-11	s	RESISTOR,CHIP NETWORK 10
RB104	1-233-574-11	s	RESISTOR,CHIP NETWORK 10
RB105	1-233-574-11	s	RESISTOR,CHIP NETWORK 10
RB106	1-233-574-11	s	RESISTOR,CHIP NETWORK 10
RB107	1-233-574-11	s	RESISTOR,CHIP NETWORK 10
RB301	1-239-409-11	s	RESISTOR NETWORK 47 (1608)
RB303	1-233-576-11	s	RESISTOR,CHIP NETWORK 100
RB304	1-233-576-11	s	RESISTOR,CHIP NETWORK 100
RB500	1-233-411-11	s	RESISTOR,CHIP NETWORK 220/3216
RB501	1-233-411-11	s	RESISTOR,CHIP NETWORK 220/3216
RB502	1-233-411-11	s	RESISTOR,CHIP NETWORK 220/3216
RB604	1-233-411-11	s	RESISTOR,CHIP NETWORK 220/3216
RB605	1-233-411-11	s	RESISTOR,CHIP NETWORK 220/3216
RB606	1-233-411-11	s	RESISTOR,CHIP NETWORK 220/3216
RB612	1-233-574-11	s	RESISTOR,CHIP NETWORK 10
RB700	1-234-397-11	s	NETWORK, RES (8 GANG) 100K
RB701	1-234-397-11	s	NETWORK, RES (8 GANG) 100K
RB702	1-234-397-11	s	NETWORK, RES (8 GANG) 100K
RB703	1-234-523-21	s	RESISTOR,CHIP NETWORK
RB704	1-234-523-21	s	RESISTOR,CHIP NETWORK
RB705	1-233-574-11	s	RESISTOR,CHIP NETWORK 10
RB706	1-233-574-11	s	RESISTOR,CHIP NETWORK 10
RB707	1-233-574-11	s	RESISTOR,CHIP NETWORK 10
RB708	1-233-574-11	s	RESISTOR,CHIP NETWORK 10
RB709	1-233-665-11	s	NETWORK, RES (8 GANG) 47K
RB710	1-233-665-11	s	NETWORK, RES (8 GANG) 47K
RB711	1-233-665-11	s	NETWORK, RES (8 GANG) 47K
RB712	1-233-665-11	s	NETWORK, RES (8 GANG) 47K
RB713	1-233-665-11	s	NETWORK, RES (8 GANG) 47K
RB801	1-236-908-11	s	RESISTOR,NETWORK 10K (3216)
RB802	1-233-574-11	s	RESISTOR,CHIP NETWORK 10
RB803	1-233-574-11	s	RESISTOR,CHIP NETWORK 10
RB804	1-233-574-11	s	RESISTOR,CHIP NETWORK 10
RB806	1-233-574-11	s	RESISTOR,CHIP NETWORK 10
RB807	1-233-574-11	s	RESISTOR,CHIP NETWORK 10
RB808	1-233-411-11	s	RESISTOR,CHIP NETWORK 220/3216
RB809	1-233-411-11	s	RESISTOR,CHIP NETWORK 220/3216
RB810	1-233-411-11	s	RESISTOR,CHIP NETWORK 220/3216
RB811	1-233-411-11	s	RESISTOR,CHIP NETWORK 220/3216
RB813	1-233-574-11	s	RESISTOR,CHIP NETWORK 10
RB814	1-233-574-11	s	RESISTOR,CHIP NETWORK 10
RB815	1-233-574-11	s	RESISTOR,CHIP NETWORK 10
RB816	1-233-574-11	s	RESISTOR,CHIP NETWORK 10
RB817	1-233-574-11	s	RESISTOR,CHIP NETWORK 10
TP100	1-535-877-22	s	CHIP,CHECKER (TEST POINT)
TP300	1-535-877-22	s	CHIP,CHECKER (TEST POINT)
TP500	1-535-877-22	s	CHIP,CHECKER (TEST POINT)
TP600	1-535-877-22	s	CHIP,CHECKER (TEST POINT)

SDI-52A BOARD [SUFFIX 15] for HDW and MSW PLAYER

[Lot No. 261 -] HDW-2000, M2000/P, M2100/P, A2100
MSW-M2100/P

*a: [Lot No. 261 -]
*b: [Lot No. 292 -]

Ref. No. or Q'ty	Part No.	SP	Description
C300	1-107-826-11	s	CAPACITOR,CHIP CERAMIC 0.1MF
C301	1-107-826-11	s	CAPACITOR,CHIP CERAMIC 0.1MF
C302	1-107-826-11	s	CAPACITOR,CHIP CERAMIC 0.1MF
C303	1-107-826-11	s	CAPACITOR,CHIP CERAMIC 0.1MF
C306	1-107-826-11	s	CAPACITOR,CHIP CERAMIC 0.1MF
C307	1-164-230-11	s	CAPACITOR,CERAMIC 220PF/50V
C308	1-107-826-11	s	CAPACITOR,CHIP CERAMIC 0.1MF
C309	1-107-826-11	s	CAPACITOR,CHIP CERAMIC 0.1MF
C311	1-135-870-91	s	CAPACITOR, TANTALUM 2.2/16V
C312	1-135-957-11	s	CAP, CHIP TANTALUM ELECT 10MF
C313	1-137-704-91	s	CAPACITOR, TANTALUM 10MF(3216)
C314	1-137-927-91	s	CAPACITOR,TANTALUM ELECT 150MF
C315	1-107-826-11	s	CAPACITOR,CHIP CERAMIC 0.1MF
C316	1-128-964-11	s	CAPACITOR,TANTALUM 100MF/6.3V
C317	1-107-826-11	s	CAPACITOR,CHIP CERAMIC 0.1MF
C502	1-107-826-11	s	CAPACITOR,CHIP CERAMIC 0.1MF
C503	1-107-826-11	s	CAPACITOR,CHIP CERAMIC 0.1MF
C504	1-107-826-11	s	CAPACITOR,CHIP CERAMIC 0.1MF
C505	1-107-826-11	s	CAPACITOR,CHIP CERAMIC 0.1MF
C506	1-135-993-11	s	CAPACITOR TANTALUM ELECT 33MF
C507	1-137-927-91	s	CAPACITOR,TANTALUM ELECT 150MF
C508	1-107-826-11	s	CAPACITOR,CHIP CERAMIC 0.1MF
C509	1-107-826-11	s	CAPACITOR,CHIP CERAMIC 0.1MF
C510	1-107-826-11	s	CAPACITOR,CHIP CERAMIC 0.1MF
C511	1-137-927-91	s	CAPACITOR,TANTALUM ELECT 150MF
C512	1-107-826-11	s	CAPACITOR,CHIP CERAMIC 0.1MF
C513	1-135-993-11	s	CAPACITOR TANTALUM ELECT 33MF
C514	1-107-826-11	s	CAPACITOR,CHIP CERAMIC 0.1MF
C515	1-107-826-11	s	CAPACITOR,CHIP CERAMIC 0.1MF
C516	1-107-826-11	s	CAPACITOR,CHIP CERAMIC 0.1MF
C517	1-107-826-11	s	CAPACITOR,CHIP CERAMIC 0.1MF
C518	1-107-826-11	s	CAPACITOR,CHIP CERAMIC 0.1MF
C519	1-107-826-11	s	CAPACITOR,CHIP CERAMIC 0.1MF
C520	1-107-826-11	s	CAPACITOR,CHIP CERAMIC 0.1MF
C521	1-107-826-11	s	CAPACITOR,CHIP CERAMIC 0.1MF
C522	1-107-826-11	s	CAPACITOR,CHIP CERAMIC 0.1MF
C523	1-107-826-11	s	CAPACITOR,CHIP CERAMIC 0.1MF
C524	1-107-826-11	s	CAPACITOR,CHIP CERAMIC 0.1MF
C525	1-135-993-11	s	CAPACITOR TANTALUM ELECT 33MF
C526	1-162-915-11	s	CAPACITOR,CERAMIC 10PF/50V CH
C527	1-107-826-11	s	CAPACITOR,CHIP CERAMIC 0.1MF
C528	1-107-826-11	s	CAPACITOR,CHIP CERAMIC 0.1MF
C529	1-107-826-11	s	CAPACITOR,CHIP CERAMIC 0.1MF
C530	1-107-826-11	s	CAPACITOR,CHIP CERAMIC 0.1MF
C531	1-107-826-11	s	CAPACITOR,CHIP CERAMIC 0.1MF
C532	1-107-826-11	s	CAPACITOR,CHIP CERAMIC 0.1MF
C533	1-107-826-11	s	CAPACITOR,CHIP CERAMIC 0.1MF
C534	1-107-826-11	s	CAPACITOR,CHIP CERAMIC 0.1MF
C535	1-107-826-11	s	CAPACITOR,CHIP CERAMIC 0.1MF
C536	1-107-826-11	s	CAPACITOR,CHIP CERAMIC 0.1MF
C537	1-107-826-11	s	CAPACITOR,CHIP CERAMIC 0.1MF
C539	1-107-826-11	s	CAPACITOR,CHIP CERAMIC 0.1MF
C540	1-162-911-11	s	CAPACITOR,CERAMIC 6PF/50V 1608
C542	1-107-826-11	s	CAPACITOR,CHIP CERAMIC 0.1MF
C543	1-107-826-11	s	CAPACITOR,CHIP CERAMIC 0.1MF

(SDI-52A BOARD [SUFFIX 15] for HDW and MSW PLAYER)

Ref. No. or Q'ty	Part No.	SP	Description
C544	1-107-826-11	s	CAPACITOR,CHIP CERAMIC 0.1MF
C545	1-107-826-11	s	CAPACITOR,CHIP CERAMIC 0.1MF
C547	1-107-826-11	s	CAPACITOR,CHIP CERAMIC 0.1MF
C548	1-107-826-11	s	CAPACITOR,CHIP CERAMIC 0.1MF
C549	1-135-993-11	s	CAPACITOR TANTALUM ELECT 33MF
C551	1-162-907-11	s	CAPACITOR,CERAMIC 2PF/50V(CK)
C552	1-162-907-11	s	CAPACITOR,CERAMIC 2PF/50V(CK)
C600	1-107-826-11	s	CAPACITOR,CHIP CERAMIC 0.1MF
C601	1-107-826-11	s	CAPACITOR,CHIP CERAMIC 0.1MF
C602	1-107-826-11	s	CAPACITOR,CHIP CERAMIC 0.1MF
C603	1-107-826-11	s	CAPACITOR,CHIP CERAMIC 0.1MF
C604	1-135-993-11	s	CAPACITOR TANTALUM ELECT 33MF
C605	1-137-927-91	s	CAPACITOR,TANTALUM ELECT 150MF
C606	1-107-826-11	s	CAPACITOR,CHIP CERAMIC 0.1MF
C607	1-107-826-11	s	CAPACITOR,CHIP CERAMIC 0.1MF
C608	1-107-826-11	s	CAPACITOR,CHIP CERAMIC 0.1MF
C609	1-137-927-91	s	CAPACITOR,TANTALUM ELECT 150MF
C610	1-107-826-11	s	CAPACITOR,CHIP CERAMIC 0.1MF
C611	1-135-993-11	s	CAPACITOR TANTALUM ELECT 33MF
C612	1-107-826-11	s	CAPACITOR,CHIP CERAMIC 0.1MF
C613	1-107-826-11	s	CAPACITOR,CHIP CERAMIC 0.1MF
C614	1-107-826-11	s	CAPACITOR,CHIP CERAMIC 0.1MF
C615	1-107-826-11	s	CAPACITOR,CHIP CERAMIC 0.1MF
C616	1-107-826-11	s	CAPACITOR,CHIP CERAMIC 0.1MF
C617	1-107-826-11	s	CAPACITOR,CHIP CERAMIC 0.1MF
C618	1-107-826-11	s	CAPACITOR,CHIP CERAMIC 0.1MF
C619	1-107-826-11	s	CAPACITOR,CHIP CERAMIC 0.1MF
C620	1-107-826-11	s	CAPACITOR,CHIP CERAMIC 0.1MF
C621	1-107-826-11	s	CAPACITOR,CHIP CERAMIC 0.1MF
C622	1-107-826-11	s	CAPACITOR,CHIP CERAMIC 0.1MF
C623	1-135-993-11	s	CAPACITOR TANTALUM ELECT 33MF
C624	1-162-915-11	s	CAPACITOR,CERAMIC 10PF/50V CH
C625	1-107-826-11	s	CAPACITOR,CHIP CERAMIC 0.1MF
C626	1-107-826-11	s	CAPACITOR,CHIP CERAMIC 0.1MF
C627	1-107-826-11	s	CAPACITOR,CHIP CERAMIC 0.1MF
C628	1-107-826-11	s	CAPACITOR,CHIP CERAMIC 0.1MF
C629	1-107-826-11	s	CAPACITOR,CHIP CERAMIC 0.1MF
C630	1-107-826-11	s	CAPACITOR,CHIP CERAMIC 0.1MF
C631	1-107-826-11	s	CAPACITOR,CHIP CERAMIC 0.1MF
C632	1-107-826-11	s	CAPACITOR,CHIP CERAMIC 0.1MF
C633	1-107-826-11	s	CAPACITOR,CHIP CERAMIC 0.1MF
C634	1-107-826-11	s	CAPACITOR,CHIP CERAMIC 0.1MF
C635	1-107-826-11	s	CAPACITOR,CHIP CERAMIC 0.1MF
C636	1-107-826-11	s	CAPACITOR,CHIP CERAMIC 0.1MF
C637	1-162-911-11	s	CAPACITOR,CERAMIC 6PF/50V 1608
C638	1-107-826-11	s	CAPACITOR,CHIP CERAMIC 0.1MF
C639	1-107-826-11	s	CAPACITOR,CHIP CERAMIC 0.1MF
C640	1-107-826-11	s	CAPACITOR,CHIP CERAMIC 0.1MF
C641	1-107-826-11	s	CAPACITOR,CHIP CERAMIC 0.1MF
C642	1-107-826-11	s	CAPACITOR,CHIP CERAMIC 0.1MF
C643	1-135-993-11	s	CAPACITOR TANTALUM ELECT 33MF
C644	1-162-907-11	s	CAPACITOR,CERAMIC 2PF/50V(CK)
C700	1-107-826-11	s	CAPACITOR,CHIP CERAMIC 0.1MF
C705	1-107-826-11	s	CAPACITOR,CHIP CERAMIC 0.1MF
C706	1-107-826-11	s	CAPACITOR,CHIP CERAMIC 0.1MF
C707	1-107-826-11	s	CAPACITOR,CHIP CERAMIC 0.1MF
C708	1-107-826-11	s	CAPACITOR,CHIP CERAMIC 0.1MF
C709	1-107-826-11	s	CAPACITOR,CHIP CERAMIC 0.1MF
C710	1-107-826-11	s	CAPACITOR,CHIP CERAMIC 0.1MF

(SDI-52A BOARD [SUFFIX 15] for HDW and MSW PLAYER)

Ref. No. or Q'ty	Part No.	SP	Description
C713	1-107-826-11	s	CAPACITOR,CHIP CERAMIC 0.1MF
C714	1-107-826-11	s	CAPACITOR,CHIP CERAMIC 0.1MF
C801	1-164-156-11	s	CAPACITOR,CERAMIC 0.1MF/25V F
C802	1-164-156-11	s	CAPACITOR,CERAMIC 0.1MF/25V F
C803	1-164-156-11	s	CAPACITOR,CERAMIC 0.1MF/25V F
C804	1-164-156-11	s	CAPACITOR,CERAMIC 0.1MF/25V F
C805	1-164-156-11	s	CAPACITOR,CERAMIC 0.1MF/25V F
C806	1-164-156-11	s	CAPACITOR,CERAMIC 0.1MF/25V F
C807	1-164-156-11	s	CAPACITOR,CERAMIC 0.1MF/25V F
C808	1-164-156-11	s	CAPACITOR,CERAMIC 0.1MF/25V F
C809	1-164-156-11	s	CAPACITOR,CERAMIC 0.1MF/25V F
C810	1-107-686-11	s	CAPACITOR,TANTALUM 4.7MF/16V
C811	1-111-253-11	s	CAPACITOR TANTALUM 100MF/6.3V
C812	1-164-156-11	s	CAPACITOR,CERAMIC 0.1MF/25V F
C813	1-164-156-11	s	CAPACITOR,CERAMIC 0.1MF/25V F
C814	1-164-156-11	s	CAPACITOR,CERAMIC 0.1MF/25V F
C815	1-164-156-11	s	CAPACITOR,CERAMIC 0.1MF/25V F
C816	1-164-156-11	s	CAPACITOR,CERAMIC 0.1MF/25V F
C817	1-164-156-11	s	CAPACITOR,CERAMIC 0.1MF/25V F
C818	1-164-156-11	s	CAPACITOR,CERAMIC 0.1MF/25V F
C819	1-164-156-11	s	CAPACITOR,CERAMIC 0.1MF/25V F
C820	1-164-156-11	s	CAPACITOR,CERAMIC 0.1MF/25V F
C821	1-164-156-11	s	CAPACITOR,CERAMIC 0.1MF/25V F
C822	1-164-156-11	s	CAPACITOR,CERAMIC 0.1MF/25V F
C823	1-164-156-11	s	CAPACITOR,CERAMIC 0.1MF/25V F
C824	1-164-156-11	s	CAPACITOR,CERAMIC 0.1MF/25V F
CN500	1-764-243-11	o	CONNECTOR (COAXIAL)
CN501	1-764-243-11	o	CONNECTOR (COAXIAL)
CN600	1-764-243-11	o	CONNECTOR (COAXIAL)
CN800	1-580-789-21	o	PIN,CONNECTOR (SMD) 6P
D300	8-719-941-04	s	DIODE SB007-03CP
D301	8-719-941-04	s	DIODE SB007-03CP
D701	8-719-064-52	s	DIODE CL-191YG-CD-T
D800	8-719-820-41	s	DIODE 1SS302
FB500	1-414-864-11	s	INDUCTOR, MICRO (CHIP TYPE)
FB501	1-414-864-11	s	INDUCTOR, MICRO (CHIP TYPE)
FB502	1-414-864-11	s	INDUCTOR, MICRO (CHIP TYPE)
FB503	1-414-864-11	s	INDUCTOR, MICRO (CHIP TYPE)
FB504	1-414-864-11	s	INDUCTOR, MICRO (CHIP TYPE)
FB505	1-414-864-11	s	INDUCTOR, MICRO (CHIP TYPE)
FB600	1-414-864-11	s	INDUCTOR, MICRO (CHIP TYPE)
FB601	1-414-864-11	s	INDUCTOR, MICRO (CHIP TYPE)
FB602	1-414-864-11	s	INDUCTOR, MICRO (CHIP TYPE)
FB603	1-414-864-11	s	INDUCTOR, MICRO (CHIP TYPE)
FB604	1-414-864-11	s	INDUCTOR, MICRO (CHIP TYPE)
FB605	1-414-864-11	s	INDUCTOR, MICRO (CHIP TYPE)
IC300 *b	8-759-475-48	s	IC TC74LCX245FT(EL)
*a	8-759-549-15	s	IC SN74LV245APWR
IC302	8-759-491-46	s	IC TC74VHCT04AFT (EL)
IC303	8-759-524-09	s	IC TC74VHC153FT (EL)
IC304	8-759-523-95	s	IC TC74VHC74FT(EL)
IC305	8-759-392-01	s	IC TC7SH86FU (TE85R)
IC307	8-759-832-05	s	IC BA18BC0FP-E2
IC502	8-759-549-15	s	IC SN74LV245APWR
IC503	8-759-549-15	s	IC SN74LV245APWR
IC504	8-759-533-85	s	IC L88M05T-FA-TL
IC505	8-759-337-40	s	IC NJM2904V(TE2)

(SDI-52A BOARD [SUFFIX 15] for HDW and MSW PLAYER)

Ref. No. or Q'ty	Part No.	SP	Description
IC506	8-759-460-72	s	IC BA033FP
IC507	8-752-078-32	s	IC CXB1341R
IC600	8-759-549-15	s	IC SN74LV245APWR
IC601	8-759-549-15	s	IC SN74LV245APWR
IC602	8-759-533-85	s	IC L88M05T-FA-TL
IC604	8-759-460-72	s	IC BA033FP
IC605	8-752-078-32	s	IC CXB1341R
IC606	8-759-337-40	s	IC NJM2904V(TE2)
IC700	8-759-491-46	s	IC TC74VHCT04AFT (EL)
IC701	8-759-524-07	s	IC TC74VHC138FT(EL)
IC704	8-752-392-03	s	IC CXD1095BR
IC707	8-759-523-81	s	IC TC74VHC08FT(EL)
IC801	6-802-601-01	s	IC XC18V02-SDI52-V100
IC802	6-702-238-11	s	IC HY57V643220CT-7TR
IC804	8-749-018-41	s	IC SI-3025LSA-TL
IC806	8-759-524-27	s	IC TC74VHC244FT(EL)
IC807	8-759-491-46	s	IC TC74VHCT04AFT (EL)
L300	1-416-344-11	s	COIL, CHOKE 10UH
Q1	8-729-029-14	s	TRANSISTOR DTC144EUA-T106
Q500	8-729-140-63	s	TRANSISTOR 2SA1611-M5M6
Q501	8-729-117-32	s	TRANSISTOR 2SC4177
Q502	8-729-117-32	s	TRANSISTOR 2SC4177
Q503	8-729-043-92	s	TRANSISTOR 2SC5084-0(TE85L)
Q505	8-729-043-92	s	TRANSISTOR 2SC5084-0(TE85L)
Q508	8-729-043-92	s	TRANSISTOR 2SC5084-0(TE85L)
Q510	8-729-043-92	s	TRANSISTOR 2SC5084-0(TE85L)
Q600	8-729-140-63	s	TRANSISTOR 2SA1611-M5M6
Q601	8-729-117-32	s	TRANSISTOR 2SC4177
Q602	8-729-117-32	s	TRANSISTOR 2SC4177
Q603	8-729-043-92	s	TRANSISTOR 2SC5084-0(TE85L)
Q604	8-729-043-92	s	TRANSISTOR 2SC5084-0(TE85L)
Q605	8-729-043-92	s	TRANSISTOR 2SC5084-0(TE85L)
Q606	8-729-043-92	s	TRANSISTOR 2SC5084-0(TE85L)
R136	1-216-864-11	s	CONDUCTOR, CHIP (1608)
R152	1-218-652-11	s	RESISTOR,CHIP 22 1/16W (1608)
R153	1-218-652-11	s	RESISTOR,CHIP 22 1/16W (1608)
R300	1-218-644-11	s	RESISTOR,CHIP 10 1/16W
R304	1-216-864-11	s	CONDUCTOR, CHIP (1608)
R305 *b	1-216-864-11	s	CONDUCTOR, CHIP (1608)
R306	1-216-864-11	s	CONDUCTOR, CHIP (1608)
R309	1-216-864-11	s	CONDUCTOR, CHIP (1608)
R313	1-218-644-11	s	RESISTOR,CHIP 10 1/16W
R314	1-218-644-11	s	RESISTOR,CHIP 10 1/16W
R315	1-218-660-91	s	RESISTOR,CHIP 47 1/16W (1608)
R316 *b	1-216-864-11	s	CONDUCTOR, CHIP (1608)
R317	1-216-864-11	s	CONDUCTOR, CHIP (1608)
R318	1-216-864-11	s	CONDUCTOR, CHIP (1608)
R320	1-216-864-11	s	CONDUCTOR, CHIP (1608)
R321 *b	1-216-864-11	s	CONDUCTOR, CHIP (1608)
R322	1-216-864-11	s	CONDUCTOR, CHIP (1608)
R323	1-218-722-11	s	RESISTOR, CHIP 18K 1/16W 1608
R324	1-218-740-11	s	RESISTOR,CHIP 100K 1/16W(1608)
R325	1-218-740-11	s	RESISTOR,CHIP 100K 1/16W(1608)
R326	1-218-740-11	s	RESISTOR,CHIP 100K 1/16W(1608)
R500	1-218-728-11	s	RESISTOR,CHIP 33K 1/16W
R501	1-218-728-11	s	RESISTOR,CHIP 33K 1/16W
R502	1-218-676-11	s	RESISTOR,CHIP 220 1/16W(1608)
R503	1-218-676-11	s	RESISTOR,CHIP 220 1/16W(1608)

(SDI-52A BOARD [SUFFIX 15] for HDW and MSW PLAYER)

Ref. No. or Q'ty	Part No.	SP	Description
R507	1-218-660-91	s	RESISTOR,CHIP 47 1/16W (1608)
R508	1-218-668-11	s	RESISTOR,CHIP 100 1/16W (1608)
R509	1-218-711-11	s	RESISTOR,METAL 6.2K 1/16W
R510	1-218-701-11	s	RESISTOR,CHIP 2.4K 1/16W(1608)
R511	1-218-710-11	s	RESISTOR,CHIP 5.6K 1/16W(1608)
R512	1-218-668-11	s	RESISTOR,CHIP 100 1/16W (1608)
R513	1-218-720-11	s	RESISTOR,CHIP 15K 1/16W(1608)
R514	1-218-720-11	s	RESISTOR,CHIP 15K 1/16W(1608)
R515	1-218-660-91	s	RESISTOR,CHIP 47 1/16W (1608)
R516	1-218-712-11	s	RESISTOR,METAL 6.8K 1/16W
R517	1-218-700-11	s	RESISTOR,CHIP 2.2K 1/16W(1608)
R518	1-218-718-11	s	RESISTOR CHIP 12K 1/16W (1608)
R519	1-218-660-91	s	RESISTOR,CHIP 47 1/16W (1608)
R520	1-218-692-11	s	RESISTOR,CHIP 1.0K 1/16W(1608)
R522	1-218-660-91	s	RESISTOR,CHIP 47 1/16W (1608)
R523	1-218-700-11	s	RESISTOR,CHIP 2.2K 1/16W(1608)
R524	1-218-696-11	s	RESISTOR,CHIP 1.5K 1/16W(1608)
R525	1-218-674-11	s	RESISTOR CHIP 180 1/16W (1608)
R526	1-218-660-91	s	RESISTOR,CHIP 47 1/16W (1608)
R527	1-218-678-11	s	RESISTOR CHIP 270 1/16W (1608)
R528	1-218-700-11	s	RESISTOR,CHIP 2.2K 1/16W(1608)
R529	1-218-684-11	s	RESISTOR,CHIP 470 1/16W (1608)
R530	1-218-714-11	s	RESISTOR,CHIP 8.2K 1/16W(1608)
R531	1-218-716-11	s	RESISTOR,CHIP 10K 1/16W(1608)
R533	1-218-678-11	s	RESISTOR CHIP 270 1/16W (1608)
R534	1-218-678-11	s	RESISTOR CHIP 270 1/16W (1608)
R535	1-218-660-91	s	RESISTOR,CHIP 47 1/16W (1608)
R537	1-216-623-11	s	RESISTOR,CHIP 68 1/10W(2012)
R538	1-216-612-11	s	RESISTOR,CHIP 24 1/10W(2012)
R539	1-216-618-11	s	RESISTOR,CHIP 43 1/10W(2012)
R542	1-218-674-11	s	RESISTOR CHIP 180 1/16W (1608)
R544	1-216-623-11	s	RESISTOR,CHIP 68 1/10W(2012)
R545	1-216-612-11	s	RESISTOR,CHIP 24 1/10W(2012)
R546	1-216-649-11	s	RESISTOR,CHIP 820 1/10W (2012)
R549	1-218-644-11	s	RESISTOR,CHIP 10 1/16W
R550	1-218-644-11	s	RESISTOR,CHIP 10 1/16W
R551	1-218-660-91	s	RESISTOR,CHIP 47 1/16W (1608)
R554	1-216-631-11	s	RESISTOR,CHIP 150 1/10W (2012)
R557	1-216-631-11	s	RESISTOR,CHIP 150 1/10W (2012)
R558	1-218-692-11	s	RESISTOR,CHIP 1.0K 1/16W(1608)
R559	1-218-692-11	s	RESISTOR,CHIP 1.0K 1/16W(1608)
R560	1-218-664-11	s	RESISTOR,CHIP 68 1/16W (1608)
R561	1-218-664-11	s	RESISTOR,CHIP 68 1/16W (1608)
R600	1-218-660-91	s	RESISTOR,CHIP 47 1/16W (1608)
R602	1-216-864-11	s	CONDUCTOR, CHIP (1608)
R603	1-218-660-91	s	RESISTOR,CHIP 47 1/16W (1608)
R604	1-218-668-11	s	RESISTOR,CHIP 100 1/16W (1608)
R605	1-218-711-11	s	RESISTOR,METAL 6.2K 1/16W
R606	1-218-701-11	s	RESISTOR,CHIP 2.4K 1/16W(1608)
R607	1-218-710-11	s	RESISTOR,CHIP 5.6K 1/16W(1608)
R608	1-218-678-11	s	RESISTOR CHIP 270 1/16W (1608)
R609	1-218-720-11	s	RESISTOR,CHIP 15K 1/16W(1608)
R610	1-218-720-11	s	RESISTOR,CHIP 15K 1/16W(1608)
R611	1-218-660-91	s	RESISTOR,CHIP 47 1/16W (1608)
R612	1-218-712-11	s	RESISTOR,METAL 6.8K 1/16W
R613	1-218-700-11	s	RESISTOR,CHIP 2.2K 1/16W(1608)
R614	1-218-718-11	s	RESISTOR CHIP 12K 1/16W (1608)
R615	1-218-660-91	s	RESISTOR,CHIP 47 1/16W (1608)
R616	1-218-692-11	s	RESISTOR,CHIP 1.0K 1/16W(1608)

(SDI-52A BOARD [SUFFIX 15] for HDW and MSW PLAYER)

Ref. No. or Q'ty	Part No.	SP	Description
R618	1-218-660-91	s	RESISTOR,CHIP 47 1/16W (1608)
R619	1-218-700-11	s	RESISTOR,CHIP 2.2K 1/16W(1608)
R620	1-218-696-11	s	RESISTOR,CHIP 1.5K 1/16W(1608)
R621	1-218-674-11	s	RESISTOR CHIP 180 1/16W (1608)
R622	1-218-660-91	s	RESISTOR,CHIP 47 1/16W (1608)
R623	1-218-678-11	s	RESISTOR CHIP 270 1/16W (1608)
R624	1-218-700-11	s	RESISTOR,CHIP 2.2K 1/16W(1608)
R625	1-218-684-11	s	RESISTOR,CHIP 470 1/16W (1608)
R626	1-218-714-11	s	RESISTOR,CHIP 8.2K 1/16W(1608)
R627	1-218-716-11	s	RESISTOR,CHIP 10K 1/16W(1608)
R629	1-218-678-11	s	RESISTOR CHIP 270 1/16W (1608)
R630	1-218-678-11	s	RESISTOR CHIP 270 1/16W (1608)
R631	1-218-660-91	s	RESISTOR,CHIP 47 1/16W (1608)
R632	1-216-623-11	s	RESISTOR,CHIP 68 1/10W(2012)
R633	1-216-612-11	s	RESISTOR,CHIP 24 1/10W(2012)
R634	1-216-618-11	s	RESISTOR,CHIP 43 1/10W(2012)
R635	1-218-674-11	s	RESISTOR CHIP 180 1/16W (1608)
R636	1-216-623-11	s	RESISTOR,CHIP 68 1/10W(2012)
R637	1-216-612-11	s	RESISTOR,CHIP 24 1/10W(2012)
R638	1-216-649-11	s	RESISTOR,CHIP 820 1/10W (2012)
R639	1-218-660-91	s	RESISTOR,CHIP 47 1/16W (1608)
R640	1-218-660-91	s	RESISTOR,CHIP 47 1/16W (1608)
R641	1-218-660-91	s	RESISTOR,CHIP 47 1/16W (1608)
R642	1-216-631-11	s	RESISTOR,CHIP 150 1/10W (2012)
R643	1-216-631-11	s	RESISTOR,CHIP 150 1/10W (2012)
R644	1-218-692-11	s	RESISTOR,CHIP 1.0K 1/16W(1608)
R645	1-218-664-11	s	RESISTOR,CHIP 68 1/16W (1608)
R700	1-218-644-11	s	RESISTOR,CHIP 10 1/16W
R702	1-218-692-11	s	RESISTOR,CHIP 1.0K 1/16W(1608)
R705	1-216-864-11	s	CONDUCTOR, CHIP (1608)
R707	1-218-668-11	s	RESISTOR,CHIP 100 1/16W (1608)
R708	1-216-864-11	s	CONDUCTOR, CHIP (1608)
R710	1-216-864-11	s	CONDUCTOR, CHIP (1608)
R801	1-218-716-11	s	RESISTOR,CHIP 10K 1/16W(1608)
R802	1-218-680-11	s	RESISTOR,CHIP 330 1/16W(1608)
R803	1-218-708-11	s	RESISTOR,CHIP 4.7K 1/16W(1608)
R805	1-218-652-11	s	RESISTOR,CHIP 22 1/16W (1608)
R806	1-218-652-11	s	RESISTOR,CHIP 22 1/16W (1608)
R807	1-218-652-11	s	RESISTOR,CHIP 22 1/16W (1608)
R808	1-218-652-11	s	RESISTOR,CHIP 22 1/16W (1608)
R809	1-218-660-91	s	RESISTOR,CHIP 47 1/16W (1608)
R811	1-216-864-11	s	CONDUCTOR, CHIP (1608)
R812	1-218-644-11	s	RESISTOR,CHIP 10 1/16W
R815	1-216-864-11	s	CONDUCTOR, CHIP (1608)
R816	1-218-708-11	s	RESISTOR,CHIP 4.7K 1/16W(1608)
R818	1-216-864-11	s	CONDUCTOR, CHIP (1608)
RB301	1-239-409-11	s	RESISTOR NETWORK 47 (1608)
RB500	1-239-407-11	s	NETWORK RESISTOR(CHIP) 330
RB501	1-239-407-11	s	NETWORK RESISTOR(CHIP) 330
RB502	1-239-407-11	s	NETWORK RESISTOR(CHIP) 330
RB604	1-239-407-11	s	NETWORK RESISTOR(CHIP) 330
RB605	1-239-407-11	s	NETWORK RESISTOR(CHIP) 330
RB606	1-239-407-11	s	NETWORK RESISTOR(CHIP) 330
RB612	1-233-936-11	s	RESISTOR,NETWORK 10 (1608)
RB700	1-234-397-11	s	NETWORK, RES (8 GANG) 100K
RB701	1-234-397-11	s	NETWORK, RES (8 GANG) 100K
RB702	1-234-397-11	s	NETWORK, RES (8 GANG) 100K
RB703	1-239-711-11	s	NETWORK, RESISTOR 0 (1608)

(SDI-52A BOARD [SUFFIX 15] for HDW and MSW PLAYER)

Ref. No. or Q'ty	Part No.	SP	Description
RB704	1-239-711-11	s	NETWORK, RESISTOR 0 (1608)
RB705	1-233-936-11	s	RESISTOR,NETWORK 10 (1608)
RB706	1-233-936-11	s	RESISTOR,NETWORK 10 (1608)
RB707	1-233-936-11	s	RESISTOR,NETWORK 10 (1608)
RB708	1-233-936-11	s	RESISTOR,NETWORK 10 (1608)
RB709	1-233-665-11	s	NETWORK, RES (8 GANG) 47K
RB710	1-233-665-11	s	NETWORK, RES (8 GANG) 47K
RB711	1-233-665-11	s	NETWORK, RES (8 GANG) 47K
RB712	1-233-665-11	s	NETWORK, RES (8 GANG) 47K
RB713	1-233-665-11	s	NETWORK, RES (8 GANG) 47K
RB801	1-236-908-11	s	RESISTOR,NETWORK 10K (3216)
RB802	1-233-936-11	s	RESISTOR,NETWORK 10 (1608)
RB803	1-233-936-11	s	RESISTOR,NETWORK 10 (1608)
RB804	1-233-936-11	s	RESISTOR,NETWORK 10 (1608)
RB806	1-233-936-11	s	RESISTOR,NETWORK 10 (1608)
RB807	1-233-936-11	s	RESISTOR,NETWORK 10 (1608)
RB808	1-233-936-11	s	RESISTOR,NETWORK 10 (1608)
RB809	1-233-936-11	s	RESISTOR,NETWORK 10 (1608)
RB810	1-233-936-11	s	RESISTOR,NETWORK 10 (1608)
RB811	1-233-936-11	s	RESISTOR,NETWORK 10 (1608)
RB813	1-233-936-11	s	RESISTOR,NETWORK 10 (1608)
RB814	1-233-936-11	s	RESISTOR,NETWORK 10 (1608)
RB815	1-233-936-11	s	RESISTOR,NETWORK 10 (1608)
RB816	1-233-936-11	s	RESISTOR,NETWORK 10 (1608)
RB817	1-233-936-11	s	RESISTOR,NETWORK 10 (1608)

SDI-52A BOARD [SUFFIX 17-] for HDW and MSW PLAYER

[Lot No. 421 -] HDW-2000, M2000/P, M2100/P, A2100
[Lot No. 4C2 -] HDW-D2000
[Lot No. 462 -] HDW-S2000/P
[Lot No. 421 -] MSW-M2100/P
[Lot No. 495 -] MSW-M2100E/P

Ref. No. or Q'ty	Part No.	SP	Description
1pc	A-8327-282-D	s	MOUNTED CIRCUIT BOARD, SDI-52A
C100	1-128-451-11	s	CAPACITOR ELECT 22MF/16V(105C)
C112	1-127-692-11	s	CAP, CHIP CERAMIC 10MF B 3216
C122	1-165-811-11	s	CAPACITOR CHIP CERAMIC 22MF B
C123	1-165-811-11	s	CAPACITOR CHIP CERAMIC 22MF B
C300	1-107-826-11	s	CAPACITOR,CHIP CERAMIC 0.1MF
C301	1-107-826-11	s	CAPACITOR,CHIP CERAMIC 0.1MF
C302	1-107-826-11	s	CAPACITOR,CHIP CERAMIC 0.1MF
C303	1-107-826-11	s	CAPACITOR,CHIP CERAMIC 0.1MF
C306	1-107-826-11	s	CAPACITOR,CHIP CERAMIC 0.1MF
C307	1-164-230-11	s	CAPACITOR,CERAMIC 220PF/50V
C308	1-107-826-11	s	CAPACITOR,CHIP CERAMIC 0.1MF
C309	1-107-826-11	s	CAPACITOR,CHIP CERAMIC 0.1MF
C311	1-125-889-11	s	CAPACITOR, CERAMIC 2.2MF
C312	1-127-692-11	s	CAP, CHIP CERAMIC 10MF B 3216
C313	1-127-692-11	s	CAP, CHIP CERAMIC 10MF B 3216
C314	1-128-590-11	s	CAPACITOR ELECT 100MF/6.3V(105
C315	1-107-826-11	s	CAPACITOR,CHIP CERAMIC 0.1MF
C316	1-128-590-11	s	CAPACITOR ELECT 100MF/6.3V(105
C317	1-107-826-11	s	CAPACITOR,CHIP CERAMIC 0.1MF
C318	1-165-811-11	s	CAPACITOR CHIP CERAMIC 22MF B
C502	1-107-826-11	s	CAPACITOR,CHIP CERAMIC 0.1MF
C503	1-107-826-11	s	CAPACITOR,CHIP CERAMIC 0.1MF
C504	1-107-826-11	s	CAPACITOR,CHIP CERAMIC 0.1MF
C505	1-107-826-11	s	CAPACITOR,CHIP CERAMIC 0.1MF
C506	1-128-451-11	s	CAPACITOR ELECT 22MF/16V(105C)
C507	1-128-590-11	s	CAPACITOR ELECT 100MF/6.3V(105
C508	1-107-826-11	s	CAPACITOR,CHIP CERAMIC 0.1MF
C509	1-107-826-11	s	CAPACITOR,CHIP CERAMIC 0.1MF
C510	1-107-826-11	s	CAPACITOR,CHIP CERAMIC 0.1MF
C511	1-128-590-11	s	CAPACITOR ELECT 100MF/6.3V(105
C512	1-107-826-11	s	CAPACITOR,CHIP CERAMIC 0.1MF
C513	1-165-811-11	s	CAPACITOR CHIP CERAMIC 22MF B
C514	1-107-826-11	s	CAPACITOR,CHIP CERAMIC 0.1MF
C515	1-107-826-11	s	CAPACITOR,CHIP CERAMIC 0.1MF
C516	1-107-826-11	s	CAPACITOR,CHIP CERAMIC 0.1MF
C517	1-107-826-11	s	CAPACITOR,CHIP CERAMIC 0.1MF
C518	1-107-826-11	s	CAPACITOR,CHIP CERAMIC 0.1MF
C519	1-107-826-11	s	CAPACITOR,CHIP CERAMIC 0.1MF
C520	1-107-826-11	s	CAPACITOR,CHIP CERAMIC 0.1MF
C521	1-107-826-11	s	CAPACITOR,CHIP CERAMIC 0.1MF
C522	1-107-826-11	s	CAPACITOR,CHIP CERAMIC 0.1MF
C523	1-107-826-11	s	CAPACITOR,CHIP CERAMIC 0.1MF
C524	1-107-826-11	s	CAPACITOR,CHIP CERAMIC 0.1MF
C525	1-165-811-11	s	CAPACITOR CHIP CERAMIC 22MF B
C526	1-162-915-11	s	CAPACITOR,CERAMIC 10PF/50V CH
C527	1-107-826-11	s	CAPACITOR,CHIP CERAMIC 0.1MF
C528	1-107-826-11	s	CAPACITOR,CHIP CERAMIC 0.1MF
C529	1-107-826-11	s	CAPACITOR,CHIP CERAMIC 0.1MF
C530	1-107-826-11	s	CAPACITOR,CHIP CERAMIC 0.1MF
C531	1-107-826-11	s	CAPACITOR,CHIP CERAMIC 0.1MF
C532	1-107-826-11	s	CAPACITOR,CHIP CERAMIC 0.1MF
C533	1-107-826-11	s	CAPACITOR,CHIP CERAMIC 0.1MF
C534	1-107-826-11	s	CAPACITOR,CHIP CERAMIC 0.1MF
C535	1-107-826-11	s	CAPACITOR,CHIP CERAMIC 0.1MF

(SDI-52A BOARD [SUFFIX 17-] for HDW and MSW PLAYER)

Ref. No. or Q'ty	Part No.	SP	Description
C536	1-107-826-11	s	CAPACITOR,CHIP CERAMIC 0.1MF
C537	1-107-826-11	s	CAPACITOR,CHIP CERAMIC 0.1MF
C539	1-107-826-11	s	CAPACITOR,CHIP CERAMIC 0.1MF
C540	1-162-911-11	s	CAPACITOR,CERAMIC 6PF/50V 1608
C542	1-107-826-11	s	CAPACITOR,CHIP CERAMIC 0.1MF
C543	1-107-826-11	s	CAPACITOR,CHIP CERAMIC 0.1MF
C544	1-107-826-11	s	CAPACITOR,CHIP CERAMIC 0.1MF
C545	1-107-826-11	s	CAPACITOR,CHIP CERAMIC 0.1MF
C547	1-107-826-11	s	CAPACITOR,CHIP CERAMIC 0.1MF
C548	1-107-826-11	s	CAPACITOR,CHIP CERAMIC 0.1MF
C549	1-165-811-11	s	CAPACITOR CHIP CERAMIC 22MF B
C551	1-162-907-11	s	CAPACITOR,CERAMIC 2PF/50V(CK)
C552	1-162-907-11	s	CAPACITOR,CERAMIC 2PF/50V(CK)
C600	1-107-826-11	s	CAPACITOR,CHIP CERAMIC 0.1MF
C601	1-107-826-11	s	CAPACITOR,CHIP CERAMIC 0.1MF
C602	1-107-826-11	s	CAPACITOR,CHIP CERAMIC 0.1MF
C603	1-107-826-11	s	CAPACITOR,CHIP CERAMIC 0.1MF
C604	1-128-451-11	s	CAPACITOR ELECT 22MF/16V(105C)
C605	1-128-590-11	s	CAPACITOR ELECT 100MF/6.3V(105
C606	1-107-826-11	s	CAPACITOR,CHIP CERAMIC 0.1MF
C607	1-107-826-11	s	CAPACITOR,CHIP CERAMIC 0.1MF
C608	1-107-826-11	s	CAPACITOR,CHIP CERAMIC 0.1MF
C609	1-128-590-11	s	CAPACITOR ELECT 100MF/6.3V(105
C610	1-107-826-11	s	CAPACITOR,CHIP CERAMIC 0.1MF
C611	1-165-811-11	s	CAPACITOR CHIP CERAMIC 22MF B
C612	1-107-826-11	s	CAPACITOR,CHIP CERAMIC 0.1MF
C613	1-107-826-11	s	CAPACITOR,CHIP CERAMIC 0.1MF
C614	1-107-826-11	s	CAPACITOR,CHIP CERAMIC 0.1MF
C615	1-107-826-11	s	CAPACITOR,CHIP CERAMIC 0.1MF
C616	1-107-826-11	s	CAPACITOR,CHIP CERAMIC 0.1MF
C617	1-107-826-11	s	CAPACITOR,CHIP CERAMIC 0.1MF
C618	1-107-826-11	s	CAPACITOR,CHIP CERAMIC 0.1MF
C619	1-107-826-11	s	CAPACITOR,CHIP CERAMIC 0.1MF
C620	1-107-826-11	s	CAPACITOR,CHIP CERAMIC 0.1MF
C621	1-107-826-11	s	CAPACITOR,CHIP CERAMIC 0.1MF
C622	1-107-826-11	s	CAPACITOR,CHIP CERAMIC 0.1MF
C623	1-165-811-11	s	CAPACITOR CHIP CERAMIC 22MF B
C624	1-162-915-11	s	CAPACITOR,CERAMIC 10PF/50V CH
C625	1-107-826-11	s	CAPACITOR,CHIP CERAMIC 0.1MF
C626	1-107-826-11	s	CAPACITOR,CHIP CERAMIC 0.1MF
C627	1-107-826-11	s	CAPACITOR,CHIP CERAMIC 0.1MF
C628	1-107-826-11	s	CAPACITOR,CHIP CERAMIC 0.1MF
C629	1-107-826-11	s	CAPACITOR,CHIP CERAMIC 0.1MF
C630	1-107-826-11	s	CAPACITOR,CHIP CERAMIC 0.1MF
C631	1-107-826-11	s	CAPACITOR,CHIP CERAMIC 0.1MF
C632	1-107-826-11	s	CAPACITOR,CHIP CERAMIC 0.1MF
C633	1-107-826-11	s	CAPACITOR,CHIP CERAMIC 0.1MF
C634	1-107-826-11	s	CAPACITOR,CHIP CERAMIC 0.1MF
C635	1-107-826-11	s	CAPACITOR,CHIP CERAMIC 0.1MF
C636	1-107-826-11	s	CAPACITOR,CHIP CERAMIC 0.1MF
C637	1-162-911-11	s	CAPACITOR,CERAMIC 6PF/50V 1608
C638	1-107-826-11	s	CAPACITOR,CHIP CERAMIC 0.1MF
C639	1-107-826-11	s	CAPACITOR,CHIP CERAMIC 0.1MF
C640	1-107-826-11	s	CAPACITOR,CHIP CERAMIC 0.1MF
C641	1-107-826-11	s	CAPACITOR,CHIP CERAMIC 0.1MF
C642	1-107-826-11	s	CAPACITOR,CHIP CERAMIC 0.1MF
C643	1-165-811-11	s	CAPACITOR CHIP CERAMIC 22MF B
C644	1-162-907-11	s	CAPACITOR,CERAMIC 2PF/50V(CK)
C700	1-107-826-11	s	CAPACITOR,CHIP CERAMIC 0.1MF

(SDI-52A BOARD [SUFFIX 17-] for HDW and MSW PLAYER)

Ref. No. or Q'ty	Part No.	SP	Description
C705	1-107-826-11	s	CAPACITOR,CHIP CERAMIC 0.1MF
C706	1-107-826-11	s	CAPACITOR,CHIP CERAMIC 0.1MF
C707	1-107-826-11	s	CAPACITOR,CHIP CERAMIC 0.1MF
C708	1-107-826-11	s	CAPACITOR,CHIP CERAMIC 0.1MF
C709	1-107-826-11	s	CAPACITOR,CHIP CERAMIC 0.1MF
C710	1-107-826-11	s	CAPACITOR,CHIP CERAMIC 0.1MF
C713	1-107-826-11	s	CAPACITOR,CHIP CERAMIC 0.1MF
C714	1-107-826-11	s	CAPACITOR,CHIP CERAMIC 0.1MF
C801	1-131-992-11	s	CAP, CERAMIC 100000PF F 1608
C802	1-131-992-11	s	CAP, CERAMIC 100000PF F 1608
C803	1-131-992-11	s	CAP, CERAMIC 100000PF F 1608
C804	1-131-992-11	s	CAP, CERAMIC 100000PF F 1608
C805	1-131-992-11	s	CAP, CERAMIC 100000PF F 1608
C806	1-131-992-11	s	CAP, CERAMIC 100000PF F 1608
C807	1-131-992-11	s	CAP, CERAMIC 100000PF F 1608
C808	1-131-992-11	s	CAP, CERAMIC 100000PF F 1608
C809	1-131-992-11	s	CAP, CERAMIC 100000PF F 1608
C810	1-127-760-11	s	CAPACITOR,CERAMIC 4.7MF/6.3V
C811	1-128-590-11	s	CAPACITOR ELECT 100MF/6.3V(105
C812	1-131-992-11	s	CAP, CERAMIC 100000PF F 1608
C813	1-131-992-11	s	CAP, CERAMIC 100000PF F 1608
C814	1-131-992-11	s	CAP, CERAMIC 100000PF F 1608
C815	1-131-992-11	s	CAP, CERAMIC 100000PF F 1608
C816	1-131-992-11	s	CAP, CERAMIC 100000PF F 1608
C817	1-131-992-11	s	CAP, CERAMIC 100000PF F 1608
C818	1-131-992-11	s	CAP, CERAMIC 100000PF F 1608
C819	1-131-992-11	s	CAP, CERAMIC 100000PF F 1608
C820	1-131-992-11	s	CAP, CERAMIC 100000PF F 1608
C821	1-131-992-11	s	CAP, CERAMIC 100000PF F 1608
C822	1-131-992-11	s	CAP, CERAMIC 100000PF F 1608
C823	1-131-992-11	s	CAP, CERAMIC 100000PF F 1608
C824	1-131-992-11	s	CAP, CERAMIC 100000PF F 1608
CN500	1-764-243-11	o	CONNECTOR (COAXIAL)
CN501	1-764-243-11	o	CONNECTOR (COAXIAL)
CN600	1-764-243-11	o	CONNECTOR (COAXIAL)
CN800	1-580-789-91	s	PIN, CONNECTOR 6P
D300	8-719-975-40	s	DIODE RB411D (RECTI)
D301	8-719-975-40	s	DIODE RB411D (RECTI)
D701	8-719-064-52	s	DIODE CL-191YG-CD-T
D800	8-719-820-41	s	DIODE 1SS302
E700	1-535-877-22	s	CHIP,CHECKER (TEST POINT)
E701	1-535-877-22	s	CHIP,CHECKER (TEST POINT)
E702	1-535-877-22	s	CHIP,CHECKER (TEST POINT)
E703	1-535-877-22	s	CHIP,CHECKER (TEST POINT)
E704	1-535-877-22	s	CHIP,CHECKER (TEST POINT)
E705	1-535-877-22	s	CHIP,CHECKER (TEST POINT)
E706	1-535-877-22	s	CHIP,CHECKER (TEST POINT)
E707	1-535-877-22	s	CHIP,CHECKER (TEST POINT)
FB500	1-414-864-11	s	INDUCTOR, MICRO (CHIP TYPE)
FB501	1-414-864-11	s	INDUCTOR, MICRO (CHIP TYPE)
FB502	1-414-864-11	s	INDUCTOR, MICRO (CHIP TYPE)
FB503	1-414-864-11	s	INDUCTOR, MICRO (CHIP TYPE)
FB504	1-414-864-11	s	INDUCTOR, MICRO (CHIP TYPE)
FB505	1-414-864-11	s	INDUCTOR, MICRO (CHIP TYPE)
FB600	1-414-864-11	s	INDUCTOR, MICRO (CHIP TYPE)
FB601	1-414-864-11	s	INDUCTOR, MICRO (CHIP TYPE)
FB602	1-414-864-11	s	INDUCTOR, MICRO (CHIP TYPE)
FB603	1-414-864-11	s	INDUCTOR, MICRO (CHIP TYPE)

(SDI-52A BOARD [SUFFIX 17-] for HDW and MSW PLAYER)

Ref. No. or Q'ty	Part No.	SP	Description
FB604	1-414-864-11	s	INDUCTOR, MICRO (CHIP TYPE)
FB605	1-414-864-11	s	INDUCTOR, MICRO (CHIP TYPE)
IC300	8-759-392-77	s	IC SN74LVC245APW (E20)
IC302	8-759-491-46	s	IC TC74VHCT04AFT (EL)
IC303	8-759-524-09	s	IC TC74VHC153FT (EL)
IC304	8-759-523-95	s	IC TC74VHC74FT(EL)
IC305	8-759-392-01	s	IC TC7SH86FU (TE85R)
IC307	8-759-832-05	s	IC BA18BC0FP-E2
IC502	8-759-549-15	s	IC SN74LV245APWR
IC503	8-759-549-15	s	IC SN74LV245APWR
IC504	8-759-533-85	s	IC L88M05T-FA-TL
IC505	8-759-337-40	s	IC NJM2904V(TE2)
IC506	8-759-460-72	s	IC BA033FP
IC507	8-752-078-32	s	IC CXB1341R
IC600	8-759-549-15	s	IC SN74LV245APWR
IC601	8-759-549-15	s	IC SN74LV245APWR
IC602	8-759-533-85	s	IC L88M05T-FA-TL
IC604	8-759-460-72	s	IC BA033FP
IC605	8-752-078-32	s	IC CXB1341R
IC606	8-759-337-40	s	IC NJM2904V(TE2)
IC700	8-759-491-46	s	IC TC74VHCT04AFT (EL)
IC701	8-759-524-07	s	IC TC74VHC138FT(EL)
IC704	8-752-392-03	s	IC CXD1095BR
IC707	8-759-523-81	s	IC TC74VHC08FT(EL)
IC801	6-802-601-02	s	IC XC18V02-SDI52-V100
IC802	6-705-983-01	s	IC IS42S32200B-6TL-TR
IC804	8-749-018-41	s	IC SI-3025LSA-TL
IC806	8-759-524-27	s	IC TC74VHC244FT(EL)
IC807	8-759-491-46	s	IC TC74VHCT04AFT (EL)
L300	1-416-344-11	s	COIL, CHOKE 10UH
Q1	8-729-928-81	s	TRANSISTOR DTC144EE
Q500	8-729-140-63	s	TRANSISTOR 2SA1611-M5M6
Q501	8-729-105-68	s	TRANSISTOR 2SC3356-K
Q502	8-729-105-68	s	TRANSISTOR 2SC3356-K
Q503	8-729-043-92	s	TRANSISTOR 2SC5084-0(TE85L)
Q505	8-729-043-92	s	TRANSISTOR 2SC5084-0(TE85L)
Q508	8-729-043-92	s	TRANSISTOR 2SC5084-0(TE85L)
Q510	8-729-043-92	s	TRANSISTOR 2SC5084-0(TE85L)
Q600	8-729-140-63	s	TRANSISTOR 2SA1611-M5M6
Q601	8-729-105-68	s	TRANSISTOR 2SC3356-K
Q602	8-729-105-68	s	TRANSISTOR 2SC3356-K
Q603	8-729-043-92	s	TRANSISTOR 2SC5084-0(TE85L)
Q604	8-729-043-92	s	TRANSISTOR 2SC5084-0(TE85L)
Q605	8-729-043-92	s	TRANSISTOR 2SC5084-0(TE85L)
Q606	8-729-043-92	s	TRANSISTOR 2SC5084-0(TE85L)
R136	1-216-864-11	s	CONDUCTOR, CHIP (1608)
R152	1-211-977-11	s	RESISTOR,CHIP 22 1/10W (1608)
R153	1-211-977-11	s	RESISTOR,CHIP 22 1/10W (1608)
R300	1-211-969-11	s	RESISTOR,CHIP 10 1/10W (1608)
R304	1-216-864-11	s	CONDUCTOR, CHIP (1608)
R305	1-216-864-11	s	CONDUCTOR, CHIP (1608)
R309	1-216-864-11	s	CONDUCTOR, CHIP (1608)
R313	1-211-969-11	s	RESISTOR,CHIP 10 1/10W (1608)
R314	1-211-969-11	s	RESISTOR,CHIP 10 1/10W (1608)
R315	1-211-985-11	s	RESISTOR,CHIP 47 1/10W (1608)
R316	1-216-864-11	s	CONDUCTOR, CHIP (1608)
R317	1-216-864-11	s	CONDUCTOR, CHIP (1608)

(SDI-52A BOARD [SUFFIX 17-] for HDW and MSW PLAYER)

Ref. No. or Q'ty	Part No.	SP	Description
R321	1-216-864-11	s	CONDUCTOR, CHIP (1608)
R322	1-216-864-11	s	CONDUCTOR, CHIP (1608)
R323	1-218-877-11	s	RESISTOR,CHIP 18K 1/10W (1608)
R324	1-218-895-11	s	RESISTOR,CHIP 100K 1/10W(1608)
R325	1-218-895-11	s	RESISTOR,CHIP 100K 1/10W(1608)
R326	1-218-895-11	s	RESISTOR,CHIP 100K 1/10W(1608)
R327	1-218-446-11	s	RESISTOR,CHIP 1 (1608)
R328	1-218-446-11	s	RESISTOR,CHIP 1 (1608)
R500	1-218-883-11	s	RESISTOR,CHIP 33K 1/10W (1608)
R501	1-218-883-11	s	RESISTOR,CHIP 33K 1/10W (1608)
R502	1-218-831-11	s	RESISTOR, CHIP 220 1/10W(1608)
R503	1-218-831-11	s	RESISTOR, CHIP 220 1/10W(1608)
R507	1-211-985-11	s	RESISTOR,CHIP 47 1/10W (1608)
R508	1-218-823-11	s	RESISTOR,CHIP 100 1/10W (1608)
R509	1-218-866-11	s	RESISTOR,CHIP 6.2K 1/10W(1608)
R510	1-218-856-11	s	RESISTOR,CHIP 2.4K 1/10W(1608)
R511	1-218-865-11	s	RESISTOR,CHIP 5.6K 1/10W(1608)
R512	1-218-823-11	s	RESISTOR,CHIP 100 1/10W (1608)
R513	1-218-875-11	s	RESISTOR,CHIP 15K 1/10W (1608)
R514	1-218-875-11	s	RESISTOR,CHIP 15K 1/10W (1608)
R515	1-211-985-11	s	RESISTOR,CHIP 47 1/10W (1608)
R516	1-218-867-11	s	RESISTOR,CHIP 6.8K 1/10W(1608)
R517	1-218-855-11	s	RESISTOR,CHIP 2.2K 1/10W(1608)
R518	1-218-873-11	s	RESISTOR,CHIP 12K 1/10W (1608)
R519	1-211-985-11	s	RESISTOR,CHIP 47 1/10W (1608)
R520	1-218-847-11	s	RESISTOR, CHIP 1K 1/10W (1608)
R522	1-211-985-11	s	RESISTOR,CHIP 47 1/10W (1608)
R523	1-218-855-11	s	RESISTOR,CHIP 2.2K 1/10W(1608)
R524	1-218-851-11	s	RESISTOR,CHIP 1.5K 1/10W(1608)
R525	1-211-976-11	s	RESISTOR,CHIP 20 1/10W (1608)
R526	1-211-984-11	s	RESISTOR,CHIP 43 1/10W (1608)
R527	1-218-833-11	s	RESISTOR,CHIP 270 1/10W (1608)
R528	1-218-855-11	s	RESISTOR,CHIP 2.2K 1/10W(1608)
R529	1-218-839-11	s	RESISTOR,CHIP 470 1/10W (1608)
R530	1-218-866-11	s	RESISTOR,CHIP 6.2K 1/10W(1608)
R531	1-218-871-11	s	RESISTOR,CHIP 10K 1/10W (1608)
R533	1-218-833-11	s	RESISTOR,CHIP 270 1/10W (1608)
R534	1-218-833-11	s	RESISTOR,CHIP 270 1/10W (1608)
R535	1-211-985-11	s	RESISTOR,CHIP 47 1/10W (1608)
R537	1-211-989-11	s	RESISTOR,CHIP 68 1/10W (1608)
R538	1-211-978-11	s	RESISTOR,CHIP 24 1/10W (1608)
R539	1-211-984-11	s	RESISTOR,CHIP 43 1/10W (1608)
R542	1-218-829-11	s	RESISTOR,CHIP 180 1/10W (1608)
R544	1-211-989-11	s	RESISTOR,CHIP 68 1/10W (1608)
R545	1-211-978-11	s	RESISTOR,CHIP 24 1/10W (1608)
R546	1-218-845-11	s	RESISTOR,CHIP 820 1/10W (1608)
R549	1-211-969-11	s	RESISTOR,CHIP 10 1/10W (1608)
R550	1-211-969-11	s	RESISTOR,CHIP 10 1/10W (1608)
R551	1-211-985-11	s	RESISTOR,CHIP 47 1/10W (1608)
R554	1-218-827-11	s	RESISTOR,CHIP 150 1/10W (1608)
R557	1-218-827-11	s	RESISTOR,CHIP 150 1/10W (1608)
R558	1-218-847-11	s	RESISTOR, CHIP 1K 1/10W (1608)
R559	1-218-847-11	s	RESISTOR, CHIP 1K 1/10W (1608)
R560	1-211-989-11	s	RESISTOR,CHIP 68 1/10W (1608)
R561	1-211-989-11	s	RESISTOR,CHIP 68 1/10W (1608)
R600	1-211-985-11	s	RESISTOR,CHIP 47 1/10W (1608)
R602	1-216-864-11	s	CONDUCTOR, CHIP (1608)
R603	1-211-985-11	s	RESISTOR,CHIP 47 1/10W (1608)
R604	1-218-823-11	s	RESISTOR,CHIP 100 1/10W (1608)

(SDI-52A BOARD [SUFFIX 17-] for HDW and MSW PLAYER)

Ref. No. or Q'ty	Part No.	SP	Description
R605	1-218-866-11	s	RESISTOR,CHIP 6.2K 1/10W(1608)
R606	1-218-856-11	s	RESISTOR,CHIP 2.4K 1/10W(1608)
R607	1-218-865-11	s	RESISTOR,CHIP 5.6K 1/10W(1608)
R608	1-218-833-11	s	RESISTOR,CHIP 270 1/10W (1608)
R609	1-218-875-11	s	RESISTOR,CHIP 15K 1/10W (1608)
R610	1-218-875-11	s	RESISTOR,CHIP 15K 1/10W (1608)
R611	1-211-985-11	s	RESISTOR,CHIP 47 1/10W (1608)
R612	1-218-867-11	s	RESISTOR,CHIP 6.8K 1/10W(1608)
R613	1-218-855-11	s	RESISTOR,CHIP 2.2K 1/10W(1608)
R614	1-218-873-11	s	RESISTOR,CHIP 12K 1/10W (1608)
R615	1-211-985-11	s	RESISTOR,CHIP 47 1/10W (1608)
R616	1-218-847-11	s	RESISTOR, CHIP 1K 1/10W (1608)
R618	1-211-985-11	s	RESISTOR,CHIP 47 1/10W (1608)
R619	1-218-855-11	s	RESISTOR,CHIP 2.2K 1/10W(1608)
R620	1-218-851-11	s	RESISTOR,CHIP 1.5K 1/10W(1608)
R621	1-211-976-11	s	RESISTOR,CHIP 20 1/10W (1608)
R622	1-211-984-11	s	RESISTOR,CHIP 43 1/10W (1608)
R623	1-218-833-11	s	RESISTOR,CHIP 270 1/10W (1608)
R624	1-218-855-11	s	RESISTOR,CHIP 2.2K 1/10W(1608)
R625	1-218-839-11	s	RESISTOR,CHIP 470 1/10W (1608)
R626	1-218-866-11	s	RESISTOR,CHIP 6.2K 1/10W(1608)
R627	1-218-871-11	s	RESISTOR,CHIP 10K 1/10W (1608)
R629	1-218-833-11	s	RESISTOR,CHIP 270 1/10W (1608)
R630	1-218-833-11	s	RESISTOR,CHIP 270 1/10W (1608)
R631	1-211-985-11	s	RESISTOR,CHIP 47 1/10W (1608)
R632	1-211-989-11	s	RESISTOR,CHIP 68 1/10W (1608)
R633	1-211-978-11	s	RESISTOR,CHIP 24 1/10W (1608)
R634	1-211-984-11	s	RESISTOR,CHIP 43 1/10W (1608)
R635	1-218-829-11	s	RESISTOR,CHIP 180 1/10W (1608)
R636	1-211-989-11	s	RESISTOR,CHIP 68 1/10W (1608)
R637	1-211-978-11	s	RESISTOR,CHIP 24 1/10W (1608)
R638	1-218-845-11	s	RESISTOR,CHIP 820 1/10W (1608)
R639	1-211-985-11	s	RESISTOR,CHIP 47 1/10W (1608)
R640	1-211-985-11	s	RESISTOR,CHIP 47 1/10W (1608)
R641	1-211-985-11	s	RESISTOR,CHIP 47 1/10W (1608)
R642	1-218-827-11	s	RESISTOR,CHIP 150 1/10W (1608)
R643	1-218-827-11	s	RESISTOR,CHIP 150 1/10W (1608)
R644	1-218-847-11	s	RESISTOR, CHIP 1K 1/10W (1608)
R645	1-211-989-11	s	RESISTOR,CHIP 68 1/10W (1608)
R700	1-211-969-11	s	RESISTOR,CHIP 10 1/10W (1608)
R702	1-218-847-11	s	RESISTOR, CHIP 1K 1/10W (1608)
R705	1-216-864-11	s	CONDUCTOR, CHIP (1608)
R707	1-218-823-11	s	RESISTOR,CHIP 100 1/10W (1608)
R708	1-216-864-11	s	CONDUCTOR, CHIP (1608)
R710	1-216-864-11	s	CONDUCTOR, CHIP (1608)
R801	1-218-871-11	s	RESISTOR,CHIP 10K 1/10W (1608)
R802	1-218-835-11	s	RESISTOR,CHIP 330 1/10W (1608)
R803	1-218-863-11	s	RESISTOR,CHIP 4.7K 1/10W(1608)
R805	1-211-977-11	s	RESISTOR,CHIP 22 1/10W (1608)
R806	1-211-977-11	s	RESISTOR,CHIP 22 1/10W (1608)
R807	1-211-977-11	s	RESISTOR,CHIP 22 1/10W (1608)
R808	1-211-977-11	s	RESISTOR,CHIP 22 1/10W (1608)
R809	1-211-985-11	s	RESISTOR,CHIP 47 1/10W (1608)
R811	1-216-864-11	s	CONDUCTOR, CHIP (1608)
R812	1-211-969-11	s	RESISTOR,CHIP 10 1/10W (1608)
R815	1-216-864-11	s	CONDUCTOR, CHIP (1608)
R816	1-218-863-11	s	RESISTOR,CHIP 4.7K 1/10W(1608)
R818	1-216-864-11	s	CONDUCTOR, CHIP (1608)

(SDI-52A BOARD [SUFFIX 17-] for HDW and MSW PLAYER)

Ref. No. or Q'ty	Part No.	SP	Description
RB301	1-239-409-11	s	RESISTOR NETWORK 47 (1608)
RB500	1-233-411-11	s	RESISTOR,CHIP NETWORK 220/3216
RB501	1-233-411-11	s	RESISTOR,CHIP NETWORK 220/3216
RB502	1-233-411-11	s	RESISTOR,CHIP NETWORK 220/3216
RB604	1-233-411-11	s	RESISTOR,CHIP NETWORK 220/3216
RB605	1-233-411-11	s	RESISTOR,CHIP NETWORK 220/3216
RB606	1-233-411-11	s	RESISTOR,CHIP NETWORK 220/3216
RB612	1-233-574-11	s	RESISTOR,CHIP NETWORK 10
RB700	1-234-397-11	s	NETWORK, RES (8 GANG) 100K
RB701	1-234-397-11	s	NETWORK, RES (8 GANG) 100K
RB702	1-234-397-11	s	NETWORK, RES (8 GANG) 100K
RB703	1-234-523-21	s	RESISTOR,CHIP NETWORK
RB704	1-234-523-21	s	RESISTOR,CHIP NETWORK
RB705	1-233-574-11	s	RESISTOR,CHIP NETWORK 10
RB706	1-233-574-11	s	RESISTOR,CHIP NETWORK 10
RB707	1-233-574-11	s	RESISTOR,CHIP NETWORK 10
RB708	1-233-574-11	s	RESISTOR,CHIP NETWORK 10
RB709	1-233-665-11	s	NETWORK, RES (8 GANG) 47K
RB710	1-233-665-11	s	NETWORK, RES (8 GANG) 47K
RB711	1-233-665-11	s	NETWORK, RES (8 GANG) 47K
RB712	1-233-665-11	s	NETWORK, RES (8 GANG) 47K
RB713	1-233-665-11	s	NETWORK, RES (8 GANG) 47K
RB801	1-236-908-11	s	RESISTOR,NETWORK 10K (3216)
RB802	1-233-574-11	s	RESISTOR,CHIP NETWORK 10
RB803	1-233-574-11	s	RESISTOR,CHIP NETWORK 10
RB804	1-233-574-11	s	RESISTOR,CHIP NETWORK 10
RB806	1-233-574-11	s	RESISTOR,CHIP NETWORK 10
RB807	1-233-574-11	s	RESISTOR,CHIP NETWORK 10
RB808	1-233-411-11	s	RESISTOR,CHIP NETWORK 220/3216
RB809	1-233-411-11	s	RESISTOR,CHIP NETWORK 220/3216
RB810	1-233-411-11	s	RESISTOR,CHIP NETWORK 220/3216
RB811	1-233-411-11	s	RESISTOR,CHIP NETWORK 220/3216
RB813	1-233-574-11	s	RESISTOR,CHIP NETWORK 10
RB814	1-233-574-11	s	RESISTOR,CHIP NETWORK 10
RB815	1-233-574-11	s	RESISTOR,CHIP NETWORK 10
RB816	1-233-574-11	s	RESISTOR,CHIP NETWORK 10
RB817	1-233-574-11	s	RESISTOR,CHIP NETWORK 10
TP300	1-535-877-22	s	CHIP,CHECKER (TEST POINT)
TP500	1-535-877-22	s	CHIP,CHECKER (TEST POINT)
TP600	1-535-877-22	s	CHIP,CHECKER (TEST POINT)

SDI-63 BOARD

Since a high frequency circuit is mounted on the SDI-63 board, replacement of electrical parts are impossible. Be sure to replace the whole board when the SDI-63 board is malfunctioning.

*R: [HDW-2000, M2000/P]
*P: [HDW-A2100, M2100/P]

Ref. No. or Q'ty	Part No.	SP	Description
1pc	*R A-8327-057-A	o	MOUNTED CIRCUIT BOARD, SDI-63
	*P A-8327-117-A	o	MOUNTED CIRCUIT BOARD, SDI-63A

SE-606/606A BOARD
---

*1: [Lot No. 261 - 2A3]
*2: [Lot No. 2A4 -]

Ref. No. or Q'ty	Part No.	SP	Description
1pc	A-8328-379-B	s	MOUNTED CIRCUIT BOARD, SE-606A
C1	*2 1-162-925-11	s	CAPACITOR,CERAMIC 68PF/50V CH
	*1 1-162-923-11	s	CAPACITOR,CERAMIC 47PF/50V CH
C2	*2 1-162-925-11	s	CAPACITOR,CERAMIC 68PF/50V CH
	*1 1-162-923-11	s	CAPACITOR,CERAMIC 47PF/50V CH
C3	*2 1-164-185-11	s	CAPACITOR,CERAMIC 13PF/50V SL
	*1 1-162-915-11	s	CAPACITOR,CERAMIC 10PF/50V CH
C4	*2 1-164-185-11	s	CAPACITOR,CERAMIC 13PF/50V SL
	*1 1-162-915-11	s	CAPACITOR,CERAMIC 10PF/50V CH
CN1	1-774-792-21	s	CONNECTOR, FPC/FFC (4P)

SS-89 BOARD [SUFFIX 16]

[Lot No. 261 - 414] HDW-2000, M2000/P, M2100/P, A2100
MSW-2000, M2000/P, A2000/P, M2100/P

Ref. No. or Q'ty	Part No.	SP	Description
1pc	A-8324-880-C	s	MOUNTED CIRCUIT BOARD, SS-89
6pcs	7-682-902-11	s	SCREW +PWH 2.6X5
1pc	3-179-084-11	s	LEVER (R), C BOARD
1pc	3-179-085-11	s	LEVER (L), C BOARD
C100	1-164-156-11	s	CAPACITOR,CERAMIC 0.1MF/25V F
C101	1-164-156-11	s	CAPACITOR,CERAMIC 0.1MF/25V F
C102	1-164-156-11	s	CAPACITOR,CERAMIC 0.1MF/25V F
C103	1-164-156-11	s	CAPACITOR,CERAMIC 0.1MF/25V F
C104	1-164-156-11	s	CAPACITOR,CERAMIC 0.1MF/25V F
C105	1-164-156-11	s	CAPACITOR,CERAMIC 0.1MF/25V F
C108	1-164-156-11	s	CAPACITOR,CERAMIC 0.1MF/25V F
C109	1-164-156-11	s	CAPACITOR,CERAMIC 0.1MF/25V F
C110	1-164-156-11	s	CAPACITOR,CERAMIC 0.1MF/25V F
C111	1-164-156-11	s	CAPACITOR,CERAMIC 0.1MF/25V F
C112	1-164-156-11	s	CAPACITOR,CERAMIC 0.1MF/25V F
C113	1-164-156-11	s	CAPACITOR,CERAMIC 0.1MF/25V F
C114	1-164-156-11	s	CAPACITOR,CERAMIC 0.1MF/25V F
C116	1-164-156-11	s	CAPACITOR,CERAMIC 0.1MF/25V F
C300	1-164-156-11	s	CAPACITOR,CERAMIC 0.1MF/25V F
C301	1-164-156-11	s	CAPACITOR,CERAMIC 0.1MF/25V F
C302	1-115-416-11	s	CAPACITOR,CERAMIC 1000PF/25V
C303	1-115-416-11	s	CAPACITOR,CERAMIC 1000PF/25V
C304	1-164-739-11	s	CAPACITOR CERAMIC 560PF (1608)
C305	1-164-227-11	s	CAPACITOR,CERAMIC 0.022MF/25V
C306	1-164-227-11	s	CAPACITOR,CERAMIC 0.022MF/25V
C307	1-164-227-11	s	CAPACITOR,CERAMIC 0.022MF/25V
C308	1-164-227-11	s	CAPACITOR,CERAMIC 0.022MF/25V
C309	1-164-227-11	s	CAPACITOR,CERAMIC 0.022MF/25V
C310	1-164-227-11	s	CAPACITOR,CERAMIC 0.022MF/25V
C311	1-162-927-11	s	CAPACITOR,CERAMIC 100PF/50V CH
C312	1-162-927-11	s	CAPACITOR,CERAMIC 100PF/50V CH
C313	1-162-927-11	s	CAPACITOR,CERAMIC 100PF/50V CH
C314	1-162-927-11	s	CAPACITOR,CERAMIC 100PF/50V CH
C315	1-162-927-11	s	CAPACITOR,CERAMIC 100PF/50V CH
C316	1-162-927-11	s	CAPACITOR,CERAMIC 100PF/50V CH
C317	1-162-927-11	s	CAPACITOR,CERAMIC 100PF/50V CH
C318	1-164-156-11	s	CAPACITOR,CERAMIC 0.1MF/25V F
C320	1-164-156-11	s	CAPACITOR,CERAMIC 0.1MF/25V F
C321	1-164-227-11	s	CAPACITOR,CERAMIC 0.022MF/25V
C322	1-164-227-11	s	CAPACITOR,CERAMIC 0.022MF/25V
C323	1-162-927-11	s	CAPACITOR,CERAMIC 100PF/50V CH
C324	1-164-227-11	s	CAPACITOR,CERAMIC 0.022MF/25V
C326	1-164-227-11	s	CAPACITOR,CERAMIC 0.022MF/25V
C327	1-164-227-11	s	CAPACITOR,CERAMIC 0.022MF/25V
C328	1-164-227-11	s	CAPACITOR,CERAMIC 0.022MF/25V
C329	1-164-227-11	s	CAPACITOR,CERAMIC 0.022MF/25V
C330	1-164-227-11	s	CAPACITOR,CERAMIC 0.022MF/25V
C331	1-164-227-11	s	CAPACITOR,CERAMIC 0.022MF/25V
C332	1-164-227-11	s	CAPACITOR,CERAMIC 0.022MF/25V
C333	1-162-927-11	s	CAPACITOR,CERAMIC 100PF/50V CH
C334	1-162-927-11	s	CAPACITOR,CERAMIC 100PF/50V CH
C335	1-162-927-11	s	CAPACITOR,CERAMIC 100PF/50V CH
C336	1-162-927-11	s	CAPACITOR,CERAMIC 100PF/50V CH
C337	1-162-927-11	s	CAPACITOR,CERAMIC 100PF/50V CH
C338	1-162-927-11	s	CAPACITOR,CERAMIC 100PF/50V CH
C339	1-126-391-11	s	CAPACITOR ELECT 47MF/6.3V(105)

(SS-89 BOARD [SUFFIX 16])

Ref. No. or Q'ty	Part No.	SP	Description
C340	1-164-227-11	s	CAPACITOR,CERAMIC 0.022MF/25V
C341	1-126-391-11	s	CAPACITOR ELECT 47MF/6.3V(105)
C342	1-164-227-11	s	CAPACITOR,CERAMIC 0.022MF/25V
C343	1-164-156-11	s	CAPACITOR,CERAMIC 0.1MF/25V F
C344	1-164-156-11	s	CAPACITOR,CERAMIC 0.1MF/25V F
C345	1-164-156-11	s	CAPACITOR,CERAMIC 0.1MF/25V F
C346	1-164-156-11	s	CAPACITOR,CERAMIC 0.1MF/25V F
C347	1-164-156-11	s	CAPACITOR,CERAMIC 0.1MF/25V F
C348	1-164-156-11	s	CAPACITOR,CERAMIC 0.1MF/25V F
C349	1-164-156-11	s	CAPACITOR,CERAMIC 0.1MF/25V F
C350	1-164-156-11	s	CAPACITOR,CERAMIC 0.1MF/25V F
C351	1-164-156-11	s	CAPACITOR,CERAMIC 0.1MF/25V F
C352	1-164-156-11	s	CAPACITOR,CERAMIC 0.1MF/25V F
C353	1-164-156-11	s	CAPACITOR,CERAMIC 0.1MF/25V F
C354	1-164-156-11	s	CAPACITOR,CERAMIC 0.1MF/25V F
C355	1-164-156-11	s	CAPACITOR,CERAMIC 0.1MF/25V F
C356	1-164-156-11	s	CAPACITOR,CERAMIC 0.1MF/25V F
C357	1-164-156-11	s	CAPACITOR,CERAMIC 0.1MF/25V F
C358	1-164-156-11	s	CAPACITOR,CERAMIC 0.1MF/25V F
C359	1-164-156-11	s	CAPACITOR,CERAMIC 0.1MF/25V F
C360	1-164-156-11	s	CAPACITOR,CERAMIC 0.1MF/25V F
C361	1-164-156-11	s	CAPACITOR,CERAMIC 0.1MF/25V F
C362	1-164-156-11	s	CAPACITOR,CERAMIC 0.1MF/25V F
C363	1-164-156-11	s	CAPACITOR,CERAMIC 0.1MF/25V F
C364	1-164-156-11	s	CAPACITOR,CERAMIC 0.1MF/25V F
C365	1-164-156-11	s	CAPACITOR,CERAMIC 0.1MF/25V F
C366	1-164-156-11	s	CAPACITOR,CERAMIC 0.1MF/25V F
C367	1-164-156-11	s	CAPACITOR,CERAMIC 0.1MF/25V F
C368	1-164-156-11	s	CAPACITOR,CERAMIC 0.1MF/25V F
C369	1-126-391-11	s	CAPACITOR ELECT 47MF/6.3V(105)
C370	1-126-391-11	s	CAPACITOR ELECT 47MF/6.3V(105)
C371	1-162-970-11	s	CAPACITOR CERAMIC 0.01MF/25V B
C372	1-115-416-11	s	CAPACITOR,CERAMIC 1000PF/25V
C373	1-162-970-11	s	CAPACITOR CERAMIC 0.01MF/25V B
C374	1-115-416-11	s	CAPACITOR,CERAMIC 1000PF/25V
C375	1-164-156-11	s	CAPACITOR,CERAMIC 0.1MF/25V F
C376	1-164-156-11	s	CAPACITOR,CERAMIC 0.1MF/25V F
C377	1-164-156-11	s	CAPACITOR,CERAMIC 0.1MF/25V F
C378	1-164-156-11	s	CAPACITOR,CERAMIC 0.1MF/25V F
C500	1-164-227-11	s	CAPACITOR,CERAMIC 0.022MF/25V
C501	1-125-891-11	s	CAPACITOR CERAMIC 0.47MF/10V
C502	1-164-227-11	s	CAPACITOR,CERAMIC 0.022MF/25V
C503	1-126-396-11	s	CAPACITOR,ELECT 47MF/16V(CHIP)
C505	1-164-227-11	s	CAPACITOR,CERAMIC 0.022MF/25V
C509	1-115-416-11	s	CAPACITOR,CERAMIC 1000PF/25V
C510	1-164-227-11	s	CAPACITOR,CERAMIC 0.022MF/25V
C511	1-164-227-11	s	CAPACITOR,CERAMIC 0.022MF/25V
C512	1-115-416-11	s	CAPACITOR,CERAMIC 1000PF/25V
C513	1-164-227-11	s	CAPACITOR,CERAMIC 0.022MF/25V
C514	1-164-227-11	s	CAPACITOR,CERAMIC 0.022MF/25V
C515	1-164-227-11	s	CAPACITOR,CERAMIC 0.022MF/25V
C516	1-164-227-11	s	CAPACITOR,CERAMIC 0.022MF/25V
C517	1-164-227-11	s	CAPACITOR,CERAMIC 0.022MF/25V
C518	1-115-416-11	s	CAPACITOR,CERAMIC 1000PF/25V
C519	1-164-227-11	s	CAPACITOR,CERAMIC 0.022MF/25V
C520	1-162-970-11	s	CAPACITOR CERAMIC 0.01MF/25V B
C521	1-126-391-11	s	CAPACITOR ELECT 47MF/6.3V(105)
C523	1-164-227-11	s	CAPACITOR,CERAMIC 0.022MF/25V
C524	1-164-227-11	s	CAPACITOR,CERAMIC 0.022MF/25V

(SS-89 BOARD [SUFFIX 16])

Ref. No. or Q'ty	Part No.	SP	Description
C525	1-164-227-11	s	CAPACITOR,CERAMIC 0.022MF/25V
C526	1-164-227-11	s	CAPACITOR,CERAMIC 0.022MF/25V
C527	1-164-227-11	s	CAPACITOR,CERAMIC 0.022MF/25V
C528	1-164-227-11	s	CAPACITOR,CERAMIC 0.022MF/25V
C529	1-162-970-11	s	CAPACITOR CERAMIC 0.01MF/25V B
C530	1-164-227-11	s	CAPACITOR,CERAMIC 0.022MF/25V
C531	1-164-227-11	s	CAPACITOR,CERAMIC 0.022MF/25V
C534	1-164-227-11	s	CAPACITOR,CERAMIC 0.022MF/25V
C535	1-164-227-11	s	CAPACITOR,CERAMIC 0.022MF/25V
C536	1-126-394-11	s	CAPACITOR,ELECT 10MF/16V(CHIP)
C537	1-115-416-11	s	CAPACITOR,CERAMIC 1000PF/25V
C538	1-115-416-11	s	CAPACITOR,CERAMIC 1000PF/25V
C539	1-164-227-11	s	CAPACITOR,CERAMIC 0.022MF/25V
C540	1-164-227-11	s	CAPACITOR,CERAMIC 0.022MF/25V
C541	1-165-176-11	s	CAPACITOR,CERAMIC 47000PF/16V
C542	1-165-176-11	s	CAPACITOR,CERAMIC 47000PF/16V
C543	1-115-416-11	s	CAPACITOR,CERAMIC 1000PF/25V
C546	1-115-416-11	s	CAPACITOR,CERAMIC 1000PF/25V
C551	1-115-416-11	s	CAPACITOR,CERAMIC 1000PF/25V
C552	1-164-227-11	s	CAPACITOR,CERAMIC 0.022MF/25V
C553	1-164-227-11	s	CAPACITOR,CERAMIC 0.022MF/25V
C554	1-164-227-11	s	CAPACITOR,CERAMIC 0.022MF/25V
C555	1-162-970-11	s	CAPACITOR CERAMIC 0.01MF/25V B
C556	1-162-970-11	s	CAPACITOR CERAMIC 0.01MF/25V B
C557	1-162-970-11	s	CAPACITOR CERAMIC 0.01MF/25V B
C558	1-164-156-11	s	CAPACITOR,CERAMIC 0.1MF/25V F
C559	1-164-156-11	s	CAPACITOR,CERAMIC 0.1MF/25V F
C560	1-162-970-11	s	CAPACITOR CERAMIC 0.01MF/25V B
C561	1-164-218-11	s	CAPACITOR,CERAMIC 180PF/50V CH
C562	1-164-218-11	s	CAPACITOR,CERAMIC 180PF/50V CH
C563	1-164-227-11	s	CAPACITOR,CERAMIC 0.022MF/25V
C564	1-164-227-11	s	CAPACITOR,CERAMIC 0.022MF/25V
C565	1-162-966-11	s	CAPACITOR,CERAMIC 2200PF/50V B
C566	1-164-230-11	s	CAPACITOR,CERAMIC 220PF/50V
C567	1-164-230-11	s	CAPACITOR,CERAMIC 220PF/50V
C568	1-164-218-11	s	CAPACITOR,CERAMIC 180PF/50V CH
C569	1-164-218-11	s	CAPACITOR,CERAMIC 180PF/50V CH
C570	1-164-230-11	s	CAPACITOR,CERAMIC 220PF/50V
C571	1-164-230-11	s	CAPACITOR,CERAMIC 220PF/50V
C572	1-164-227-11	s	CAPACITOR,CERAMIC 0.022MF/25V
C573	1-164-227-11	s	CAPACITOR,CERAMIC 0.022MF/25V
C574	1-164-156-11	s	CAPACITOR,CERAMIC 0.1MF/25V F
C575	1-164-227-11	s	CAPACITOR,CERAMIC 0.022MF/25V
C576	1-164-227-11	s	CAPACITOR,CERAMIC 0.022MF/25V
C577	1-164-156-11	s	CAPACITOR,CERAMIC 0.1MF/25V F
C578	1-164-156-11	s	CAPACITOR,CERAMIC 0.1MF/25V F
C579	1-164-156-11	s	CAPACITOR,CERAMIC 0.1MF/25V F
C580	1-164-156-11	s	CAPACITOR,CERAMIC 0.1MF/25V F
C581	1-164-156-11	s	CAPACITOR,CERAMIC 0.1MF/25V F
C700	1-164-315-11	s	CAPACITOR,CERAMIC 470PF/50V CH
C701	1-164-315-11	s	CAPACITOR,CERAMIC 470PF/50V CH
C702	1-164-156-11	s	CAPACITOR,CERAMIC 0.1MF/25V F
C703	1-164-227-11	s	CAPACITOR,CERAMIC 0.022MF/25V
C704	1-164-227-11	s	CAPACITOR,CERAMIC 0.022MF/25V
C705	1-164-227-11	s	CAPACITOR,CERAMIC 0.022MF/25V
C706	1-164-227-11	s	CAPACITOR,CERAMIC 0.022MF/25V
C707	1-164-156-11	s	CAPACITOR,CERAMIC 0.1MF/25V F
C708	1-164-156-11	s	CAPACITOR,CERAMIC 0.1MF/25V F
C709	1-164-156-11	s	CAPACITOR,CERAMIC 0.1MF/25V F

(SS-89 BOARD [SUFFIX 16])

Ref. No. or Q'ty	Part No.	SP	Description
C710	1-164-156-11	s	CAPACITOR,CERAMIC 0.1MF/25V F
C711	1-164-156-11	s	CAPACITOR,CERAMIC 0.1MF/25V F
C712	1-164-156-11	s	CAPACITOR,CERAMIC 0.1MF/25V F
C713	1-162-970-11	s	CAPACITOR CERAMIC 0.01MF/25V B
C714	1-162-970-11	s	CAPACITOR CERAMIC 0.01MF/25V B
C715	1-162-970-11	s	CAPACITOR CERAMIC 0.01MF/25V B
C716	1-164-227-11	s	CAPACITOR,CERAMIC 0.022MF/25V
C717	1-162-968-11	s	CAPACITOR,CERAMIC 4700PF/50V B
C718	1-164-227-11	s	CAPACITOR,CERAMIC 0.022MF/25V
C719	1-115-416-11	s	CAPACITOR,CERAMIC 1000PF/25V
C720	1-164-227-11	s	CAPACITOR,CERAMIC 0.022MF/25V
C721	1-162-968-11	s	CAPACITOR,CERAMIC 4700PF/50V B
C722	1-164-227-11	s	CAPACITOR,CERAMIC 0.022MF/25V
C723	1-162-968-11	s	CAPACITOR,CERAMIC 4700PF/50V B
C724	1-162-970-11	s	CAPACITOR CERAMIC 0.01MF/25V B
C725	1-162-970-11	s	CAPACITOR CERAMIC 0.01MF/25V B
C726	1-162-970-11	s	CAPACITOR CERAMIC 0.01MF/25V B
C727	1-162-970-11	s	CAPACITOR CERAMIC 0.01MF/25V B
C728	1-164-227-11	s	CAPACITOR,CERAMIC 0.022MF/25V
C729	1-164-227-11	s	CAPACITOR,CERAMIC 0.022MF/25V
C730	1-164-227-11	s	CAPACITOR,CERAMIC 0.022MF/25V
C731	1-164-227-11	s	CAPACITOR,CERAMIC 0.022MF/25V
C732	1-164-227-11	s	CAPACITOR,CERAMIC 0.022MF/25V
C733	1-164-227-11	s	CAPACITOR,CERAMIC 0.022MF/25V
C734	1-164-227-11	s	CAPACITOR,CERAMIC 0.022MF/25V
C735	1-164-227-11	s	CAPACITOR,CERAMIC 0.022MF/25V
C736	1-164-227-11	s	CAPACITOR,CERAMIC 0.022MF/25V
C737	1-164-227-11	s	CAPACITOR,CERAMIC 0.022MF/25V
C738	1-164-227-11	s	CAPACITOR,CERAMIC 0.022MF/25V
C739	1-164-156-11	s	CAPACITOR,CERAMIC 0.1MF/25V F
C740	1-164-156-11	s	CAPACITOR,CERAMIC 0.1MF/25V F
C741	1-164-227-11	s	CAPACITOR,CERAMIC 0.022MF/25V
C742	1-164-227-11	s	CAPACITOR,CERAMIC 0.022MF/25V
C743	1-164-156-11	s	CAPACITOR,CERAMIC 0.1MF/25V F
C744	1-164-156-11	s	CAPACITOR,CERAMIC 0.1MF/25V F
C745	1-127-715-11	s	CAPACITOR,CERAMIC 0.22MF B1608
C746	1-127-715-11	s	CAPACITOR,CERAMIC 0.22MF B1608
C747	1-164-227-11	s	CAPACITOR,CERAMIC 0.022MF/25V
C748	1-164-227-11	s	CAPACITOR,CERAMIC 0.022MF/25V
C749	1-164-156-11	s	CAPACITOR,CERAMIC 0.1MF/25V F
C750	1-164-156-11	s	CAPACITOR,CERAMIC 0.1MF/25V F
C751	1-164-156-11	s	CAPACITOR,CERAMIC 0.1MF/25V F
C752	1-164-227-11	s	CAPACITOR,CERAMIC 0.022MF/25V
C753	1-164-227-11	s	CAPACITOR,CERAMIC 0.022MF/25V
C754	1-164-156-11	s	CAPACITOR,CERAMIC 0.1MF/25V F
C755	1-164-227-11	s	CAPACITOR,CERAMIC 0.022MF/25V
C756	1-164-227-11	s	CAPACITOR,CERAMIC 0.022MF/25V
C757	1-162-966-11	s	CAPACITOR,CERAMIC 2200PF/50V B
C758	1-162-966-11	s	CAPACITOR,CERAMIC 2200PF/50V B
C759	1-164-227-11	s	CAPACITOR,CERAMIC 0.022MF/25V
C760	1-164-227-11	s	CAPACITOR,CERAMIC 0.022MF/25V
C761	1-162-968-11	s	CAPACITOR,CERAMIC 4700PF/50V B
C762	1-162-968-11	s	CAPACITOR,CERAMIC 4700PF/50V B
C763	1-164-227-11	s	CAPACITOR,CERAMIC 0.022MF/25V
C764	1-162-968-11	s	CAPACITOR,CERAMIC 4700PF/50V B
C765	1-162-968-11	s	CAPACITOR,CERAMIC 4700PF/50V B
C766	1-164-227-11	s	CAPACITOR,CERAMIC 0.022MF/25V
C767	1-162-919-11	s	CAPACITOR,CERAMIC 22PF/50V CH
C768	1-162-919-11	s	CAPACITOR,CERAMIC 22PF/50V CH

(SS-89 BOARD [SUFFIX 16])

Ref. No. or Q'ty	Part No.	SP	Description
C769	1-164-156-11	s	CAPACITOR,CERAMIC 0.1MF/25V F
C770	1-164-156-11	s	CAPACITOR,CERAMIC 0.1MF/25V F
C771	1-164-227-11	s	CAPACITOR,CERAMIC 0.022MF/25V
C772	1-164-227-11	s	CAPACITOR,CERAMIC 0.022MF/25V
C773	1-164-156-11	s	CAPACITOR,CERAMIC 0.1MF/25V F
C774	1-164-156-11	s	CAPACITOR,CERAMIC 0.1MF/25V F
C775	1-164-227-11	s	CAPACITOR,CERAMIC 0.022MF/25V
C776	1-164-227-11	s	CAPACITOR,CERAMIC 0.022MF/25V
C777	1-164-156-11	s	CAPACITOR,CERAMIC 0.1MF/25V F
C778	1-164-156-11	s	CAPACITOR,CERAMIC 0.1MF/25V F
C779	1-115-416-11	s	CAPACITOR,CERAMIC 1000PF/25V
C780	1-115-416-11	s	CAPACITOR,CERAMIC 1000PF/25V
C781	1-115-416-11	s	CAPACITOR,CERAMIC 1000PF/25V
C782	1-115-416-11	s	CAPACITOR,CERAMIC 1000PF/25V
C783	1-115-416-11	s	CAPACITOR,CERAMIC 1000PF/25V
C784	1-115-416-11	s	CAPACITOR,CERAMIC 1000PF/25V
C785	1-115-416-11	s	CAPACITOR,CERAMIC 1000PF/25V
C786	1-115-416-11	s	CAPACITOR,CERAMIC 1000PF/25V
C787	1-164-227-11	s	CAPACITOR,CERAMIC 0.022MF/25V
C788	1-164-227-11	s	CAPACITOR,CERAMIC 0.022MF/25V
C789	1-164-227-11	s	CAPACITOR,CERAMIC 0.022MF/25V
C790	1-125-891-11	s	CAPACITOR CERAMIC 0.47MF/10V
C793	1-164-156-11	s	CAPACITOR,CERAMIC 0.1MF/25V F
C796	1-126-396-11	s	CAPACITOR,ELECT 47MF/16V(CHIP)
C797	1-164-156-11	s	CAPACITOR,CERAMIC 0.1MF/25V F
C798	1-164-156-11	s	CAPACITOR,CERAMIC 0.1MF/25V F
C799	1-164-227-11	s	CAPACITOR,CERAMIC 0.022MF/25V
C800	1-164-227-11	s	CAPACITOR,CERAMIC 0.022MF/25V
C801	1-164-227-11	s	CAPACITOR,CERAMIC 0.022MF/25V
C900	1-127-573-11	s	CAPACITOR,CERAMIC 1MFB(2012)
C901	1-127-715-11	s	CAPACITOR,CERAMIC 0.22MF B1608
C902	1-162-966-11	s	CAPACITOR,CERAMIC 2200PF/50V B
C903	1-127-715-11	s	CAPACITOR,CERAMIC 0.22MF B1608
C904	1-127-715-11	s	CAPACITOR,CERAMIC 0.22MF B1608
C905	1-127-573-11	s	CAPACITOR,CERAMIC 1MFB(2012)
C906	1-127-573-11	s	CAPACITOR,CERAMIC 1MFB(2012)
C907	1-164-156-11	s	CAPACITOR,CERAMIC 0.1MF/25V F
C908	1-164-156-11	s	CAPACITOR,CERAMIC 0.1MF/25V F
C909	1-164-156-11	s	CAPACITOR,CERAMIC 0.1MF/25V F
C910	1-125-891-11	s	CAPACITOR CERAMIC 0.47MF/10V
C911	1-125-891-11	s	CAPACITOR CERAMIC 0.47MF/10V
C912	1-164-156-11	s	CAPACITOR,CERAMIC 0.1MF/25V F
C913	1-164-156-11	s	CAPACITOR,CERAMIC 0.1MF/25V F
C914	1-126-391-11	s	CAPACITOR ELECT 47MF/6.3V(105)
C915	1-126-391-11	s	CAPACITOR ELECT 47MF/6.3V(105)
C916	1-126-396-11	s	CAPACITOR,ELECT 47MF/16V(CHIP)
C917	1-126-396-11	s	CAPACITOR,ELECT 47MF/16V(CHIP)
C918	1-127-715-11	s	CAPACITOR,CERAMIC 0.22MF B1608
C919	1-126-396-11	s	CAPACITOR,ELECT 47MF/16V(CHIP)
C920	1-115-416-11	s	CAPACITOR,CERAMIC 1000PF/25V
C921	1-115-416-11	s	CAPACITOR,CERAMIC 1000PF/25V
C922	1-126-394-11	s	CAPACITOR,ELECT 10MF/16V(CHIP)
C923	1-127-715-11	s	CAPACITOR,CERAMIC 0.22MF B1608
C1100	1-164-156-11	s	CAPACITOR,CERAMIC 0.1MF/25V F
C1101	1-164-156-11	s	CAPACITOR,CERAMIC 0.1MF/25V F
C1102	1-164-156-11	s	CAPACITOR,CERAMIC 0.1MF/25V F
C1103	1-164-156-11	s	CAPACITOR,CERAMIC 0.1MF/25V F
C1104	1-164-156-11	s	CAPACITOR,CERAMIC 0.1MF/25V F
C1105	1-164-156-11	s	CAPACITOR,CERAMIC 0.1MF/25V F

(SS-89 BOARD [SUFFIX 16])

Ref. No. or Q'ty	Part No.	SP	Description
C1106	1-164-156-11	s	CAPACITOR,CERAMIC 0.1MF/25V F
C1107	1-164-156-11	s	CAPACITOR,CERAMIC 0.1MF/25V F
C1108	1-164-156-11	s	CAPACITOR,CERAMIC 0.1MF/25V F
C1109	1-164-156-11	s	CAPACITOR,CERAMIC 0.1MF/25V F
C1110	1-164-156-11	s	CAPACITOR,CERAMIC 0.1MF/25V F
C1111	1-164-156-11	s	CAPACITOR,CERAMIC 0.1MF/25V F
C1112	1-164-156-11	s	CAPACITOR,CERAMIC 0.1MF/25V F
C1113	1-164-156-11	s	CAPACITOR,CERAMIC 0.1MF/25V F
C1118	1-164-156-11	s	CAPACITOR,CERAMIC 0.1MF/25V F
C1119	1-164-156-11	s	CAPACITOR,CERAMIC 0.1MF/25V F
C1120	1-164-156-11	s	CAPACITOR,CERAMIC 0.1MF/25V F
C1121	1-164-156-11	s	CAPACITOR,CERAMIC 0.1MF/25V F
C1122	1-164-156-11	s	CAPACITOR,CERAMIC 0.1MF/25V F
C1300	1-164-156-11	s	CAPACITOR,CERAMIC 0.1MF/25V F
C1301	1-164-156-11	s	CAPACITOR,CERAMIC 0.1MF/25V F
C1302	1-164-156-11	s	CAPACITOR,CERAMIC 0.1MF/25V F
C1303	1-164-156-11	s	CAPACITOR,CERAMIC 0.1MF/25V F
C1304	1-164-156-11	s	CAPACITOR,CERAMIC 0.1MF/25V F
C1305	1-126-391-11	s	CAPACITOR ELECT 47MF/6.3V(105)
C1306	1-164-156-11	s	CAPACITOR,CERAMIC 0.1MF/25V F
C1307	1-164-156-11	s	CAPACITOR,CERAMIC 0.1MF/25V F
C1308	1-164-156-11	s	CAPACITOR,CERAMIC 0.1MF/25V F
C1309	1-164-156-11	s	CAPACITOR,CERAMIC 0.1MF/25V F
C1310	1-164-156-11	s	CAPACITOR,CERAMIC 0.1MF/25V F
C1311	1-164-156-11	s	CAPACITOR,CERAMIC 0.1MF/25V F
C1312	1-164-156-11	s	CAPACITOR,CERAMIC 0.1MF/25V F
C1313	1-164-156-11	s	CAPACITOR,CERAMIC 0.1MF/25V F
C1314	1-164-156-11	s	CAPACITOR,CERAMIC 0.1MF/25V F
C1315	1-164-156-11	s	CAPACITOR,CERAMIC 0.1MF/25V F
C1316	1-164-156-11	s	CAPACITOR,CERAMIC 0.1MF/25V F
C1317	1-164-156-11	s	CAPACITOR,CERAMIC 0.1MF/25V F
C1318	1-164-156-11	s	CAPACITOR,CERAMIC 0.1MF/25V F
C1319	1-164-156-11	s	CAPACITOR,CERAMIC 0.1MF/25V F
C1320	1-164-156-11	s	CAPACITOR,CERAMIC 0.1MF/25V F
C1321	1-164-156-11	s	CAPACITOR,CERAMIC 0.1MF/25V F
C1322	1-164-156-11	s	CAPACITOR,CERAMIC 0.1MF/25V F
C1323	1-164-156-11	s	CAPACITOR,CERAMIC 0.1MF/25V F
C1324	1-164-156-11	s	CAPACITOR,CERAMIC 0.1MF/25V F
C1325	1-164-156-11	s	CAPACITOR,CERAMIC 0.1MF/25V F
C1326	1-164-156-11	s	CAPACITOR,CERAMIC 0.1MF/25V F
C1327	1-164-156-11	s	CAPACITOR,CERAMIC 0.1MF/25V F
C1328	1-164-156-11	s	CAPACITOR,CERAMIC 0.1MF/25V F
C1329	1-164-156-11	s	CAPACITOR,CERAMIC 0.1MF/25V F
C1330	1-164-156-11	s	CAPACITOR,CERAMIC 0.1MF/25V F
C1331	1-164-156-11	s	CAPACITOR,CERAMIC 0.1MF/25V F
C1332	1-126-391-11	s	CAPACITOR ELECT 47MF/6.3V(105)
C1333	1-164-156-11	s	CAPACITOR,CERAMIC 0.1MF/25V F
C1334	1-164-156-11	s	CAPACITOR,CERAMIC 0.1MF/25V F
C1335	1-164-156-11	s	CAPACITOR,CERAMIC 0.1MF/25V F
C1336	1-164-156-11	s	CAPACITOR,CERAMIC 0.1MF/25V F
C1337	1-164-156-11	s	CAPACITOR,CERAMIC 0.1MF/25V F
C1338	1-164-156-11	s	CAPACITOR,CERAMIC 0.1MF/25V F
C1339	1-164-156-11	s	CAPACITOR,CERAMIC 0.1MF/25V F
C1340	1-126-391-11	s	CAPACITOR ELECT 47MF/6.3V(105)
C1341	1-126-391-11	s	CAPACITOR ELECT 47MF/6.3V(105)
C1342	1-162-970-11	s	CAPACITOR CERAMIC 0.01MF/25V B
C1343	1-164-156-11	s	CAPACITOR,CERAMIC 0.1MF/25V F
C1344	1-164-156-11	s	CAPACITOR,CERAMIC 0.1MF/25V F
C1502	1-164-156-11	s	CAPACITOR,CERAMIC 0.1MF/25V F

(SS-89 BOARD [SUFFIX 16])

Ref. No. or Q'ty	Part No.	SP	Description
C1503	1-164-156-11	s	CAPACITOR,CERAMIC 0.1MF/25V F
C1504	1-164-156-11	s	CAPACITOR,CERAMIC 0.1MF/25V F
C1505	1-162-915-11	s	CAPACITOR,CERAMIC 10PF/50V CH
C1506	1-162-915-11	s	CAPACITOR,CERAMIC 10PF/50V CH
C1507	1-162-915-11	s	CAPACITOR,CERAMIC 10PF/50V CH
C1508	1-162-915-11	s	CAPACITOR,CERAMIC 10PF/50V CH
C1509	1-162-915-11	s	CAPACITOR,CERAMIC 10PF/50V CH
C1510	1-162-915-11	s	CAPACITOR,CERAMIC 10PF/50V CH
C1511	1-162-915-11	s	CAPACITOR,CERAMIC 10PF/50V CH
C1512	1-162-915-11	s	CAPACITOR,CERAMIC 10PF/50V CH
C1513	1-162-915-11	s	CAPACITOR,CERAMIC 10PF/50V CH
C1514	1-164-156-11	s	CAPACITOR,CERAMIC 0.1MF/25V F
C1515	1-164-156-11	s	CAPACITOR,CERAMIC 0.1MF/25V F
C1516	1-107-826-11	s	CAPACITOR,CHIP CERAMIC 0.1MF
C1517	1-107-826-11	s	CAPACITOR,CHIP CERAMIC 0.1MF
C1518	1-107-826-11	s	CAPACITOR,CHIP CERAMIC 0.1MF
C1519	1-164-156-11	s	CAPACITOR,CERAMIC 0.1MF/25V F
C1520	1-107-826-11	s	CAPACITOR,CHIP CERAMIC 0.1MF
C1521	1-107-826-11	s	CAPACITOR,CHIP CERAMIC 0.1MF
C1522	1-164-156-11	s	CAPACITOR,CERAMIC 0.1MF/25V F
C1523	1-164-156-11	s	CAPACITOR,CERAMIC 0.1MF/25V F
C1524	1-164-156-11	s	CAPACITOR,CERAMIC 0.1MF/25V F
C1525	1-164-156-11	s	CAPACITOR,CERAMIC 0.1MF/25V F
C1526	1-164-156-11	s	CAPACITOR,CERAMIC 0.1MF/25V F
C1527	1-164-156-11	s	CAPACITOR,CERAMIC 0.1MF/25V F
C1528	1-164-156-11	s	CAPACITOR,CERAMIC 0.1MF/25V F
C1529	1-164-156-11	s	CAPACITOR,CERAMIC 0.1MF/25V F
C1530	1-164-156-11	s	CAPACITOR,CERAMIC 0.1MF/25V F
C1531	1-164-156-11	s	CAPACITOR,CERAMIC 0.1MF/25V F
C1700	1-164-156-11	s	CAPACITOR,CERAMIC 0.1MF/25V F
C1701	1-164-156-11	s	CAPACITOR,CERAMIC 0.1MF/25V F
C1702	1-164-156-11	s	CAPACITOR,CERAMIC 0.1MF/25V F
C1703	1-164-156-11	s	CAPACITOR,CERAMIC 0.1MF/25V F
C1704	1-164-156-11	s	CAPACITOR,CERAMIC 0.1MF/25V F
C1705	1-164-156-11	s	CAPACITOR,CERAMIC 0.1MF/25V F
C2100	1-164-156-11	s	CAPACITOR,CERAMIC 0.1MF/25V F
C2101	1-164-156-11	s	CAPACITOR,CERAMIC 0.1MF/25V F
C2102	1-164-156-11	s	CAPACITOR,CERAMIC 0.1MF/25V F
C2103	1-164-156-11	s	CAPACITOR,CERAMIC 0.1MF/25V F
C2104	1-164-156-11	s	CAPACITOR,CERAMIC 0.1MF/25V F
C2105	1-164-156-11	s	CAPACITOR,CERAMIC 0.1MF/25V F
C2106	1-164-156-11	s	CAPACITOR,CERAMIC 0.1MF/25V F
C2107	1-164-156-11	s	CAPACITOR,CERAMIC 0.1MF/25V F
C2108	1-164-156-11	s	CAPACITOR,CERAMIC 0.1MF/25V F
C2109	1-164-156-11	s	CAPACITOR,CERAMIC 0.1MF/25V F
C2110	1-164-156-11	s	CAPACITOR,CERAMIC 0.1MF/25V F
C2111	1-164-156-11	s	CAPACITOR,CERAMIC 0.1MF/25V F
C2112	1-164-156-11	s	CAPACITOR,CERAMIC 0.1MF/25V F
C2113	1-164-156-11	s	CAPACITOR,CERAMIC 0.1MF/25V F
C2114	1-164-156-11	s	CAPACITOR,CERAMIC 0.1MF/25V F
C2115	1-164-156-11	s	CAPACITOR,CERAMIC 0.1MF/25V F
C2306	1-164-156-11	s	CAPACITOR,CERAMIC 0.1MF/25V F
C2307	1-164-156-11	s	CAPACITOR,CERAMIC 0.1MF/25V F
C2308	1-164-156-11	s	CAPACITOR,CERAMIC 0.1MF/25V F
C2309	1-164-156-11	s	CAPACITOR,CERAMIC 0.1MF/25V F
C2310	1-126-394-11	s	CAPACITOR,ELECT 10MF/16V(CHIP)
C2311	1-126-400-11	s	CAPACITOR ELECT 22MF/35V(CHIP)
C2312	1-126-400-11	s	CAPACITOR ELECT 22MF/35V(CHIP)
C2313	1-164-156-11	s	CAPACITOR,CERAMIC 0.1MF/25V F

(SS-89 BOARD [SUFFIX 16])

Ref. No. or Q'ty	Part No.	SP	Description
C2314	1-126-394-11	s	CAPACITOR,ELECT 10MF/16V(CHIP)
C2315	1-126-396-11	s	CAPACITOR,ELECT 47MF/16V(CHIP)
C2316	1-164-156-11	s	CAPACITOR,CERAMIC 0.1MF/25V F
C2317	1-127-971-11	s	CAPACITOR,FILM 0.01MF (3216)
C2318	1-162-966-11	s	CAPACITOR,CERAMIC 2200PF/50V B
C2320	1-127-971-11	s	CAPACITOR,FILM 0.01MF (3216)
C2321	1-162-923-11	s	CAPACITOR,CERAMIC 47PF/50V CH
C2322	1-164-156-11	s	CAPACITOR,CERAMIC 0.1MF/25V F
C2323	1-164-156-11	s	CAPACITOR,CERAMIC 0.1MF/25V F
C2324	1-164-156-11	s	CAPACITOR,CERAMIC 0.1MF/25V F
C2325	1-164-156-11	s	CAPACITOR,CERAMIC 0.1MF/25V F
C2326	1-162-915-11	s	CAPACITOR,CERAMIC 10PF/50V CH
C2327	1-164-156-11	s	CAPACITOR,CERAMIC 0.1MF/25V F
C2328	1-126-396-11	s	CAPACITOR,ELECT 47MF/16V(CHIP)
C2329	1-126-396-11	s	CAPACITOR,ELECT 47MF/16V(CHIP)
C2330	1-126-396-11	s	CAPACITOR,ELECT 47MF/16V(CHIP)
C2331	1-126-396-11	s	CAPACITOR,ELECT 47MF/16V(CHIP)
C2332	1-164-156-11	s	CAPACITOR,CERAMIC 0.1MF/25V F
C2333	1-164-156-11	s	CAPACITOR,CERAMIC 0.1MF/25V F
C2334	1-164-156-11	s	CAPACITOR,CERAMIC 0.1MF/25V F
C2335	1-164-156-11	s	CAPACITOR,CERAMIC 0.1MF/25V F
C2336	1-164-156-11	s	CAPACITOR,CERAMIC 0.1MF/25V F
C2337	1-164-156-11	s	CAPACITOR,CERAMIC 0.1MF/25V F
C2338	1-126-400-11	s	CAPACITOR ELECT 22MF/35V(CHIP)
C2339	1-126-400-11	s	CAPACITOR ELECT 22MF/35V(CHIP)
C2340	1-126-396-11	s	CAPACITOR,ELECT 47MF/16V(CHIP)
C2341	1-126-396-11	s	CAPACITOR,ELECT 47MF/16V(CHIP)
C2342	1-126-396-11	s	CAPACITOR,ELECT 47MF/16V(CHIP)
C2343	1-126-396-11	s	CAPACITOR,ELECT 47MF/16V(CHIP)
CN100	1-774-391-11	o	CONNECTOR, BOARD TO BOARD 60P
CN101	1-580-057-11	o	PIN,CONNECTOR 4P
CN200	1-760-388-11	o	CONNECTOR PIN (SMD) 9 PIN
CN702	1-580-057-11	o	PIN,CONNECTOR 4P
CN1100	1-774-391-11	o	CONNECTOR, BOARD TO BOARD 60P
CN1102	1-569-775-21	o	PIN, CONNECTOR 5P
D100	8-719-024-81	s	DIODE 1SS300-TE85L
D101	8-719-071-10	s	DIODE CL-191HR-CD-T
D102	8-719-064-52	s	DIODE CL-191YG-CD-T
D103	8-719-064-52	s	DIODE CL-191YG-CD-T
D106	8-719-820-41	s	DIODE 1SS302
D300	8-719-024-81	s	DIODE 1SS300-TE85L
D301	8-719-801-78	s	DIODE 1SS184
D302	8-719-024-81	s	DIODE 1SS300-TE85L
D303	8-719-801-78	s	DIODE 1SS184
D304	8-719-820-41	s	DIODE 1SS302
D305	8-719-024-81	s	DIODE 1SS300-TE85L
D306	8-719-801-78	s	DIODE 1SS184
D307	8-719-024-81	s	DIODE 1SS300-TE85L
D308	8-719-801-78	s	DIODE 1SS184
D309	8-719-024-81	s	DIODE 1SS300-TE85L
D310	8-719-801-78	s	DIODE 1SS184
D311	8-719-024-81	s	DIODE 1SS300-TE85L
D312	8-719-801-78	s	DIODE 1SS184
D313	8-719-024-81	s	DIODE 1SS300-TE85L
D314	8-719-801-78	s	DIODE 1SS184
D315	8-719-024-81	s	DIODE 1SS300-TE85L
D316	8-719-801-78	s	DIODE 1SS184
D317	8-719-024-81	s	DIODE 1SS300-TE85L

(SS-89 BOARD [SUFFIX 16])

Ref. No. or Q'ty	Part No.	SP	Description
D500	8-719-024-81	s	DIODE 1SS300-TE85L
D700	8-719-801-78	s	DIODE 1SS184
D701	8-719-024-81	s	DIODE 1SS300-TE85L
D900	8-719-801-78	s	DIODE 1SS184
D901	8-719-801-78	s	DIODE 1SS184
D902	8-719-801-78	s	DIODE 1SS184
D1100	8-719-071-10	s	DIODE CL-191HR-CD-T
D1101	8-719-064-52	s	DIODE CL-191YG-CD-T
D1102	8-719-064-52	s	DIODE CL-191YG-CD-T
D1301	8-719-820-41	s	DIODE 1SS302
D1500	8-719-024-81	s	DIODE 1SS300-TE85L
D1501	8-719-064-52	s	DIODE CL-191YG-CD-T
D1502	8-719-064-52	s	DIODE CL-191YG-CD-T
D1503	8-719-064-52	s	DIODE CL-191YG-CD-T
D2300	8-719-024-81	s	DIODE 1SS300-TE85L
D2301	8-719-801-78	s	DIODE 1SS184
F900	⚠ 1-576-212-21	s	FUSE CHIP 1.25A (6125)
F901	⚠ 1-576-212-21	s	FUSE CHIP 1.25A (6125)
F902	⚠ 1-576-212-21	s	FUSE CHIP 1.25A (6125)
F903	⚠ 1-576-212-21	s	FUSE CHIP 1.25A (6125)
IC104	8-759-524-10	s	IC TC74VHC157FT (EL)
IC105	8-759-523-94	s	IC TC74VHC32FT(EL)
IC106	8-759-523-81	s	IC TC74VHC08FT(EL)
IC107	9-910-999-33	s	DELETED FROM RP MASTER
IC111	8-759-524-50	s	IC TC74VHC541FT(EL)
IC112	8-759-549-01	s	IC SN74LV125APWR
IC117	6-702-238-11	s	IC HY57V643220CT-7TR
IC300	8-759-278-58	s	IC NJM4558V (TE2)
IC301	8-759-278-58	s	IC NJM4558V (TE2)
IC302	8-759-278-58	s	IC NJM4558V (TE2)
IC303	8-759-278-58	s	IC NJM4558V (TE2)
IC304	8-759-278-58	s	IC NJM4558V (TE2)
IC305	8-759-549-15	s	IC SN74LV245APWR
IC306	8-759-278-58	s	IC NJM4558V (TE2)
IC309	8-759-700-78	s	IC NJM082M
IC310	8-759-523-02	s	IC TC74HC4053AFT(EL)
IC312	8-759-549-01	s	IC SN74LV125APWR
IC313	8-759-549-01	s	IC SN74LV125APWR
IC500	8-759-685-33	s	IC BU2500FV-E2
IC502	8-759-278-58	s	IC NJM4558V (TE2)
IC503	8-759-278-58	s	IC NJM4558V (TE2)
IC504	8-759-278-58	s	IC NJM4558V (TE2)
IC505	8-759-442-54	s	IC RH5RL50AA-T1
IC506	8-759-278-58	s	IC NJM4558V (TE2)
IC508	8-759-278-58	s	IC NJM4558V (TE2)
IC509	8-759-338-95	s	IC NJM2903V (TE2)
IC510	8-759-338-95	s	IC NJM2903V (TE2)
IC511	8-759-338-95	s	IC NJM2903V (TE2)
IC512	8-759-549-15	s	IC SN74LV245APWR
IC513	8-759-337-40	s	IC NJM2904V(TE2)
IC514	8-759-338-95	s	IC NJM2903V (TE2)
IC515	8-759-337-40	s	IC NJM2904V(TE2)
IC516	8-759-338-95	s	IC NJM2903V (TE2)
IC517	8-759-833-99	s	IC MC74HC4052ADTR2
IC518	8-759-278-58	s	IC NJM4558V (TE2)
IC519	8-759-523-00	s	IC TC74HC4051AFT(EL)
IC520	8-759-549-01	s	IC SN74LV125APWR
IC521	8-759-491-50	s	IC TC74VHCT244AFT(EL)

(SS-89 BOARD [SUFFIX 16])

Ref. No. or Q'ty	Part No.	SP	Description
IC700	8-759-491-50	s	IC TC74VHCT244AFT(EL)
IC701	8-759-422-21	s	IC NJM4580VTE2
IC702	8-759-523-02	s	IC TC74HC4053AFT(EL)
IC703	8-759-422-21	s	IC NJM4580VTE2
IC704	8-759-422-21	s	IC NJM4580VTE2
IC705	8-759-523-02	s	IC TC74HC4053AFT(EL)
IC706	8-759-700-78	s	IC NJM082M
IC707	8-759-422-21	s	IC NJM4580VTE2
IC708	8-759-422-21	s	IC NJM4580VTE2
IC709	8-759-422-21	s	IC NJM4580VTE2
IC710	8-759-422-21	s	IC NJM4580VTE2
IC711	8-759-523-02	s	IC TC74HC4053AFT(EL)
IC712	8-759-422-21	s	IC NJM4580VTE2
IC713	8-759-422-21	s	IC NJM4580VTE2
IC714	8-759-523-02	s	IC TC74HC4053AFT(EL)
IC715	8-759-523-02	s	IC TC74HC4053AFT(EL)
IC716	8-759-422-21	s	IC NJM4580VTE2
IC717	8-759-491-50	s	IC TC74VHCT244AFT(EL)
IC718	8-759-422-21	s	IC NJM4580VTE2
IC719	8-759-422-21	s	IC NJM4580VTE2
IC720	8-759-338-95	s	IC NJM2903V (TE2)
IC721	8-759-422-21	s	IC NJM4580VTE2
IC722	8-759-422-21	s	IC NJM4580VTE2
IC723	8-759-422-21	s	IC NJM4580VTE2
IC725	8-759-700-78	s	IC NJM082M
IC726	8-759-442-54	s	IC RH5RL50AA-T1
IC727	8-759-422-21	s	IC NJM4580VTE2
IC909	8-759-523-97	s	IC TC74VHC123AFT(EL)
IC910	8-759-338-95	s	IC NJM2903V (TE2)
IC911	8-759-182-84	s	IC PQ05SZ5U
IC912	8-759-523-94	s	IC TC74VHC32FT(EL)
IC913	8-759-542-84	s	IC S-80821ANUP-EDJ-T2
IC914	8-759-542-84	s	IC S-80821ANUP-EDJ-T2
IC915	8-759-542-84	s	IC S-80821ANUP-EDJ-T2
IC1100	8-759-549-15	s	IC SN74LV245APWR
IC1102	8-759-524-10	s	IC TC74VHC157FT (EL)
IC1103	9-910-999-33	s	DELETED FROM RP MASTER
IC1107	8-759-491-46	s	IC TC74VHCT04AFT (EL)
IC1108	8-759-523-94	s	IC TC74VHC32FT(EL)
IC1109	8-759-523-81	s	IC TC74VHC08FT(EL)
IC1110	8-759-836-52	l	IC HY57V641620HGT-P-TR
IC1111	8-759-836-52	l	IC HY57V641620HGT-P-TR
IC1112	8-759-524-48	s	IC TC74VHC393FT (EL)
IC1300	8-759-549-15	s	IC SN74LV245APWR
IC1301	8-759-524-07	s	IC TC74VHC138FT(EL)
IC1302	8-759-523-92	s	IC TC74VHC21FT(EL)
IC1303	8-759-271-86	s	IC TC7SH04FU
IC1304	8-759-523-92	s	IC TC74VHC21FT(EL)
IC1305	8-759-523-94	s	IC TC74VHC32FT(EL)
IC1306	8-759-549-15	s	IC SN74LV245APWR
IC1307	8-759-549-15	s	IC SN74LV245APWR
IC1308	8-759-549-15	s	IC SN74LV245APWR
IC1309	8-759-549-15	s	IC SN74LV245APWR
IC1310	8-759-523-94	s	IC TC74VHC32FT(EL)
IC1311	8-759-710-28	s	IC NJM4565M-A
IC1312	8-759-549-15	s	IC SN74LV245APWR
IC1500	8-759-092-26	s	IC DS3691M
IC1501	8-759-092-26	s	IC DS3691M
IC1502	8-759-660-49	s	IC AM26LV32CNSR

(SS-89 BOARD [SUFFIX 16])

Ref. No. or Q'ty	Part No.	SP	Description
IC1503	8-759-523-02	s	IC TC74HC4053AFT(EL)
IC1504	8-759-523-02	s	IC TC74HC4053AFT(EL)
IC1505	8-759-523-02	s	IC TC74HC4053AFT(EL)
IC1506	8-759-524-18	s	IC TC74VHC163FT(EL)
IC1507	8-759-660-50	s	IC SN75LV4737ADBR
IC1508	8-759-092-26	s	IC DS3691M
IC1509	8-759-523-78	s	IC TC74VHC00FT(EL)
IC1510	8-759-271-86	s	IC TC7SH04FU
IC1511	8-759-491-50	s	IC TC74VHCT244AFT(EL)
IC1512	8-759-429-23	s	IC TL16C550CPT
IC1513	8-759-578-68	s	IC SN74LVCC4245APWR
IC1514	8-759-392-01	s	IC TC7SH86FU (TE85R)
IC1700	8-759-523-94	s	IC TC74VHC32FT(EL)
IC1701	8-759-523-95	s	IC TC74VHC74FT(EL)
IC1703	8-759-523-81	s	IC TC74VHC08FT(EL)
IC1704	8-759-523-95	s	IC TC74VHC74FT(EL)
IC1705	8-759-523-94	s	IC TC74VHC32FT(EL)
IC1706	8-759-549-01	s	IC SN74LV125APWR
IC2100	8-759-549-15	s	IC SN74LV245APWR
IC2101	8-759-549-01	s	IC SN74LV125APWR
IC2102	8-759-549-15	s	IC SN74LV245APWR
IC2103	8-759-549-15	s	IC SN74LV245APWR
IC2104	8-759-549-15	s	IC SN74LV245APWR
IC2105	8-759-549-15	s	IC SN74LV245APWR
IC2106	8-759-549-15	s	IC SN74LV245APWR
IC2107	8-759-549-15	s	IC SN74LV245APWR
IC2108	8-759-549-15	s	IC SN74LV245APWR
IC2110	8-759-549-15	s	IC SN74LV245APWR
IC2111	8-759-549-15	s	IC SN74LV245APWR
IC2112	8-759-549-15	s	IC SN74LV245APWR
IC2113	8-759-549-01	s	IC SN74LV125APWR
IC2131	8-759-196-96	s	IC TC7SH08FU (TE85R)
IC2132	8-759-523-78	s	IC TC74VHC00FT(EL)
IC2134	8-759-548-97	s	IC SN74LV04APWR
IC2301	8-759-524-09	s	IC TC74VHC153FT (EL)
IC2302	8-759-524-09	s	IC TC74VHC153FT (EL)
IC2303	8-759-369-73	s	IC NJM4556AM
IC2304	8-759-700-78	s	IC NJM082M
IC2305	8-759-338-95	s	IC NJM2903V (TE2)
IC2306	8-759-523-84	s	IC TC74VHC14FT (EL)
IC2307	8-759-647-49	s	IC AL422B-TEL
IC2308	8-759-523-95	s	IC TC74VHC74FT(EL)
IC2309	8-759-196-97	s	IC TC7SH32FU (TE85R)
IC2310	8-759-689-93	s	IC XCS20XL-4VQ100C
L300	1-416-344-11	s	COIL, CHOKE 10UH
L301	1-416-344-11	s	COIL, CHOKE 10UH
L902	1-416-344-11	s	COIL, CHOKE 10UH
L904	1-416-344-11	s	COIL, CHOKE 10UH
L1300	1-416-344-11	s	COIL, CHOKE 10UH
L1301	1-416-344-11	s	COIL, CHOKE 10UH
Q100	8-729-928-81	s	TRANSISTOR DTC144EE
Q101	8-729-928-81	s	TRANSISTOR DTC144EE
Q102	8-729-928-81	s	TRANSISTOR DTC144EE
Q300	8-729-807-51	s	TRANSISTOR 2SD1623-S
Q303	8-729-230-27	s	TRANSISTOR 2SA1213Y-TE12L
Q500	8-729-807-51	s	TRANSISTOR 2SD1623-S
Q700	8-729-117-32	s	TRANSISTOR 2SC4177
Q701	8-729-117-32	s	TRANSISTOR 2SC4177

(SS-89 BOARD [SUFFIX 16])

Ref. No. or Q'ty	Part No.	SP	Description
Q900	8-729-928-81	s	TRANSISTOR DTC144EE
Q901	8-729-928-81	s	TRANSISTOR DTC144EE
Q902	8-729-117-32	s	TRANSISTOR 2SC4177
Q903	8-729-140-63	s	TRANSISTOR 2SA1611-M5M6
Q1100	8-729-928-81	s	TRANSISTOR DTC144EE
Q1101	8-729-928-81	s	TRANSISTOR DTC144EE
Q1102	8-729-928-81	s	TRANSISTOR DTC144EE
Q1500	8-729-928-81	s	TRANSISTOR DTC144EE
Q1501	8-729-928-81	s	TRANSISTOR DTC144EE
Q1502	8-729-928-81	s	TRANSISTOR DTC144EE
Q2300	8-729-142-90	s	TRANSISTOR 2SK853-K5
Q2301	8-729-142-90	s	TRANSISTOR 2SK853-K5
Q2302	8-729-928-27	s	TRANSISTOR DTA144EE
Q2303	8-729-928-27	s	TRANSISTOR DTA144EE
R100	1-218-708-11	s	RESISTOR,CHIP 4.7K 1/16W(1608)
R101	1-218-732-11	s	RESISTOR,CHIP 47K 1/16W(1608)
R102	1-218-732-11	s	RESISTOR,CHIP 47K 1/16W(1608)
R103	1-218-708-11	s	RESISTOR,CHIP 4.7K 1/16W(1608)
R104	1-218-652-11	s	RESISTOR,CHIP 22 1/16W (1608)
R105	1-218-652-11	s	RESISTOR,CHIP 22 1/16W (1608)
R106	1-216-864-11	s	CONDUCTOR, CHIP (1608)
R107	1-218-732-11	s	RESISTOR,CHIP 47K 1/16W(1608)
R108	1-218-732-11	s	RESISTOR,CHIP 47K 1/16W(1608)
R109	1-218-732-11	s	RESISTOR,CHIP 47K 1/16W(1608)
R110	1-218-732-11	s	RESISTOR,CHIP 47K 1/16W(1608)
R112	1-216-864-11	s	CONDUCTOR, CHIP (1608)
R113	1-216-864-11	s	CONDUCTOR, CHIP (1608)
R114	1-218-652-11	s	RESISTOR,CHIP 22 1/16W (1608)
R115	1-218-652-11	s	RESISTOR,CHIP 22 1/16W (1608)
R124	1-218-716-11	s	RESISTOR,CHIP 10K 1/16W(1608)
R125	1-218-716-11	s	RESISTOR,CHIP 10K 1/16W(1608)
R126	1-218-732-11	s	RESISTOR,CHIP 47K 1/16W(1608)
R127	1-218-732-11	s	RESISTOR,CHIP 47K 1/16W(1608)
R128	1-216-845-11	s	RESISTOR,CHIP 100K 1/10W(1608)
R140	1-218-732-11	s	RESISTOR,CHIP 47K 1/16W(1608)
R141	1-218-732-11	s	RESISTOR,CHIP 47K 1/16W(1608)
R142	1-218-732-11	s	RESISTOR,CHIP 47K 1/16W(1608)
R300	1-218-732-11	s	RESISTOR,CHIP 47K 1/16W(1608)
R301	1-218-724-11	s	RESISTOR,CHIP 22K 1/16W(1608)
R302	1-216-857-11	s	RESISTOR,CHIP 1M 1/10W(1608)
R303	1-218-694-11	s	RESISTOR,CHIP 1.2K1/16W(1608)
R304	1-216-857-11	s	RESISTOR,CHIP 1M 1/10W(1608)
R305	1-218-694-11	s	RESISTOR,CHIP 1.2K1/16W(1608)
R306	1-218-694-11	s	RESISTOR,CHIP 1.2K1/16W(1608)
R307	1-218-708-11	s	RESISTOR,CHIP 4.7K 1/16W(1608)
R308	1-218-716-11	s	RESISTOR,CHIP 10K 1/16W(1608)
R309	1-218-668-11	s	RESISTOR,CHIP 100 1/16W (1608)
R310	1-218-716-11	s	RESISTOR,CHIP 10K 1/16W(1608)
R311	1-218-716-11	s	RESISTOR,CHIP 10K 1/16W(1608)
R312	1-218-708-11	s	RESISTOR,CHIP 4.7K 1/16W(1608)
R313	1-218-708-11	s	RESISTOR,CHIP 4.7K 1/16W(1608)
R314	1-218-708-11	s	RESISTOR,CHIP 4.7K 1/16W(1608)
R315	1-218-708-11	s	RESISTOR,CHIP 4.7K 1/16W(1608)
R316	1-218-708-11	s	RESISTOR,CHIP 4.7K 1/16W(1608)
R317	1-218-708-11	s	RESISTOR,CHIP 4.7K 1/16W(1608)
R318	1-218-668-11	s	RESISTOR,CHIP 100 1/16W (1608)
R319	1-218-668-11	s	RESISTOR,CHIP 100 1/16W (1608)
R320	1-218-732-11	s	RESISTOR,CHIP 47K 1/16W(1608)
R321	1-218-732-11	s	RESISTOR,CHIP 47K 1/16W(1608)

(SS-89 BOARD [SUFFIX 16])

Ref. No. or Q'ty	Part No.	SP	Description
R322	1-218-732-11	s	RESISTOR,CHIP 47K 1/16W(1608)
R323	1-218-668-11	s	RESISTOR,CHIP 100 1/16W (1608)
R324	1-218-700-11	s	RESISTOR,CHIP 2.2K 1/16W(1608)
R325	1-218-724-11	s	RESISTOR,CHIP 22K 1/16W(1608)
R326	1-218-700-11	s	RESISTOR,CHIP 2.2K 1/16W(1608)
R327	1-218-716-11	s	RESISTOR,CHIP 10K 1/16W(1608)
R328	1-218-716-11	s	RESISTOR,CHIP 10K 1/16W(1608)
R329	1-218-716-11	s	RESISTOR,CHIP 10K 1/16W(1608)
R330	1-218-724-11	s	RESISTOR,CHIP 22K 1/16W(1608)
R331	1-218-716-11	s	RESISTOR,CHIP 10K 1/16W(1608)
R332	1-218-716-11	s	RESISTOR,CHIP 10K 1/16W(1608)
R333	1-218-716-11	s	RESISTOR,CHIP 10K 1/16W(1608)
R334	1-218-716-11	s	RESISTOR,CHIP 10K 1/16W(1608)
R335	1-218-716-11	s	RESISTOR,CHIP 10K 1/16W(1608)
R336	1-218-716-11	s	RESISTOR,CHIP 10K 1/16W(1608)
R337	1-218-716-11	s	RESISTOR,CHIP 10K 1/16W(1608)
R338	1-218-716-11	s	RESISTOR,CHIP 10K 1/16W(1608)
R339	1-216-864-11	s	CONDUCTOR, CHIP (1608)
R340	1-218-716-11	s	RESISTOR,CHIP 10K 1/16W(1608)
R341	1-218-716-11	s	RESISTOR,CHIP 10K 1/16W(1608)
R342	1-218-716-11	s	RESISTOR,CHIP 10K 1/16W(1608)
R343	1-216-809-11	s	RESISTOR,CHIP 100 1/10W 1608
R344	1-218-668-11	s	RESISTOR,CHIP 100 1/16W (1608)
R345	1-218-716-11	s	RESISTOR,CHIP 10K 1/16W(1608)
R346	1-218-656-11	s	RESISTOR,CHIP 33 1/16W (1608)
R347	1-218-656-11	s	RESISTOR,CHIP 33 1/16W (1608)
R348	1-218-656-11	s	RESISTOR,CHIP 33 1/16W (1608)
R349	1-218-656-11	s	RESISTOR,CHIP 33 1/16W (1608)
R501	1-218-728-11	s	RESISTOR,CHIP 33K 1/16W
R502	1-218-724-11	s	RESISTOR,CHIP 22K 1/16W(1608)
R503	1-218-724-11	s	RESISTOR,CHIP 22K 1/16W(1608)
R504	1-218-724-11	s	RESISTOR,CHIP 22K 1/16W(1608)
R505	1-218-732-11	s	RESISTOR,CHIP 47K 1/16W(1608)
R506	1-218-732-11	s	RESISTOR,CHIP 47K 1/16W(1608)
R507	1-218-740-11	s	RESISTOR,CHIP 100K 1/16W(1608)
R508	1-218-740-11	s	RESISTOR,CHIP 100K 1/16W(1608)
R509	1-218-732-11	s	RESISTOR,CHIP 47K 1/16W(1608)
R510	1-218-732-11	s	RESISTOR,CHIP 47K 1/16W(1608)
R511	1-218-732-11	s	RESISTOR,CHIP 47K 1/16W(1608)
R512	1-218-732-11	s	RESISTOR,CHIP 47K 1/16W(1608)
R513	1-218-728-11	s	RESISTOR,CHIP 33K 1/16W
R514	1-218-724-11	s	RESISTOR,CHIP 22K 1/16W(1608)
R515	1-218-724-11	s	RESISTOR,CHIP 22K 1/16W(1608)
R516	1-218-668-11	s	RESISTOR,CHIP 100 1/16W (1608)
R517	1-218-736-11	s	RESISTOR,CHIP 68K 1/16W(1608)
R518	1-218-736-11	s	RESISTOR,CHIP 68K 1/16W(1608)
R519	1-218-740-11	s	RESISTOR,CHIP 100K 1/16W(1608)
R520	1-218-736-11	s	RESISTOR,CHIP 68K 1/16W(1608)
R521	1-218-740-11	s	RESISTOR,CHIP 100K 1/16W(1608)
R522	1-216-864-11	s	CONDUCTOR, CHIP (1608)
R523	1-216-864-11	s	CONDUCTOR, CHIP (1608)
R524	1-216-864-11	s	CONDUCTOR, CHIP (1608)
R525	1-218-718-11	s	RESISTOR CHIP 12K 1/16W (1608)
R526	1-218-718-11	s	RESISTOR CHIP 12K 1/16W (1608)
R527	1-218-718-11	s	RESISTOR CHIP 12K 1/16W (1608)
R528	1-218-716-11	s	RESISTOR,CHIP 10K 1/16W(1608)
R529	1-218-716-11	s	RESISTOR,CHIP 10K 1/16W(1608)
R530	1-218-716-11	s	RESISTOR,CHIP 10K 1/16W(1608)
R531	1-218-724-11	s	RESISTOR,CHIP 22K 1/16W(1608)

(SS-89 BOARD [SUFFIX 16])

Ref. No. or Q'ty	Part No.	SP	Description
R532	1-218-724-11	s	RESISTOR,CHIP 22K 1/16W(1608)
R533	1-218-724-11	s	RESISTOR,CHIP 22K 1/16W(1608)
R534	1-218-736-11	s	RESISTOR,CHIP 68K 1/16W(1608)
R535	1-218-736-11	s	RESISTOR,CHIP 68K 1/16W(1608)
R536	1-218-724-11	s	RESISTOR,CHIP 22K 1/16W(1608)
R537	1-218-724-11	s	RESISTOR,CHIP 22K 1/16W(1608)
R538	1-218-724-11	s	RESISTOR,CHIP 22K 1/16W(1608)
R539	1-218-724-11	s	RESISTOR,CHIP 22K 1/16W(1608)
R540	1-218-736-11	s	RESISTOR,CHIP 68K 1/16W(1608)
R541	1-218-736-11	s	RESISTOR,CHIP 68K 1/16W(1608)
R542	1-218-736-11	s	RESISTOR,CHIP 68K 1/16W(1608)
R543	1-218-736-11	s	RESISTOR,CHIP 68K 1/16W(1608)
R544	1-218-732-11	s	RESISTOR,CHIP 47K 1/16W(1608)
R545	1-218-732-11	s	RESISTOR,CHIP 47K 1/16W(1608)
R546	1-218-716-11	s	RESISTOR,CHIP 10K 1/16W(1608)
R547	1-218-716-11	s	RESISTOR,CHIP 10K 1/16W(1608)
R548	1-218-696-11	s	RESISTOR,CHIP 1.5K 1/16W(1608)
R549	1-218-696-11	s	RESISTOR,CHIP 1.5K 1/16W(1608)
R550	1-218-716-11	s	RESISTOR,CHIP 10K 1/16W(1608)
R551	1-218-716-11	s	RESISTOR,CHIP 10K 1/16W(1608)
R552	1-218-716-11	s	RESISTOR,CHIP 10K 1/16W(1608)
R553	1-218-716-11	s	RESISTOR,CHIP 10K 1/16W(1608)
R554	1-218-716-11	s	RESISTOR,CHIP 10K 1/16W(1608)
R555	1-216-855-11	s	RESISTOR, CHIP 680K 1/10W 1608
R556	1-218-716-11	s	RESISTOR,CHIP 10K 1/16W(1608)
R557	1-216-855-11	s	RESISTOR, CHIP 680K 1/10W 1608
R558	1-218-722-11	s	RESISTOR, CHIP 18K 1/16W 1608
R559	1-218-722-11	s	RESISTOR, CHIP 18K 1/16W 1608
R562	1-218-716-11	s	RESISTOR,CHIP 10K 1/16W(1608)
R563	1-218-716-11	s	RESISTOR,CHIP 10K 1/16W(1608)
R564	1-218-716-11	s	RESISTOR,CHIP 10K 1/16W(1608)
R567	1-218-752-11	s	RESISTOR,CHIP 330K 1/16W(1608)
R568	1-218-752-11	s	RESISTOR,CHIP 330K 1/16W(1608)
R569	1-218-752-11	s	RESISTOR,CHIP 330K 1/16W(1608)
R570	1-218-752-11	s	RESISTOR,CHIP 330K 1/16W(1608)
R571	1-218-700-11	s	RESISTOR,CHIP 2.2K 1/16W(1608)
R572	1-218-700-11	s	RESISTOR,CHIP 2.2K 1/16W(1608)
R573	1-218-700-11	s	RESISTOR,CHIP 2.2K 1/16W(1608)
R574	1-218-700-11	s	RESISTOR,CHIP 2.2K 1/16W(1608)
R575	1-218-700-11	s	RESISTOR,CHIP 2.2K 1/16W(1608)
R576	1-218-700-11	s	RESISTOR,CHIP 2.2K 1/16W(1608)
R577	1-218-716-11	s	RESISTOR,CHIP 10K 1/16W(1608)
R578	1-218-716-11	s	RESISTOR,CHIP 10K 1/16W(1608)
R579	1-218-716-11	s	RESISTOR,CHIP 10K 1/16W(1608)
R580	1-218-716-11	s	RESISTOR,CHIP 10K 1/16W(1608)
R581	1-218-736-11	s	RESISTOR,CHIP 68K 1/16W(1608)
R582	1-218-724-11	s	RESISTOR,CHIP 22K 1/16W(1608)
R583	1-218-736-11	s	RESISTOR,CHIP 68K 1/16W(1608)
R584	1-218-724-11	s	RESISTOR,CHIP 22K 1/16W(1608)
R585	1-218-736-11	s	RESISTOR,CHIP 68K 1/16W(1608)
R586	1-218-736-11	s	RESISTOR,CHIP 68K 1/16W(1608)
R587	1-218-736-11	s	RESISTOR,CHIP 68K 1/16W(1608)
R588	1-218-736-11	s	RESISTOR,CHIP 68K 1/16W(1608)
R589	1-218-736-11	s	RESISTOR,CHIP 68K 1/16W(1608)
R590	1-218-736-11	s	RESISTOR,CHIP 68K 1/16W(1608)
R591	1-218-736-11	s	RESISTOR,CHIP 68K 1/16W(1608)
R592	1-218-736-11	s	RESISTOR,CHIP 68K 1/16W(1608)
R593	1-218-736-11	s	RESISTOR,CHIP 68K 1/16W(1608)
R594	1-218-736-11	s	RESISTOR,CHIP 68K 1/16W(1608)

(SS-89 BOARD [SUFFIX 16])

Ref. No. or Q'ty	Part No.	SP	Description
R595	1-218-724-11	s	RESISTOR,CHIP 22K 1/16W(1608)
R596	1-218-724-11	s	RESISTOR,CHIP 22K 1/16W(1608)
R597	1-216-864-11	s	CONDUCTOR, CHIP (1608)
R598	1-218-732-11	s	RESISTOR,CHIP 47K 1/16W(1608)
R599	1-218-732-11	s	RESISTOR,CHIP 47K 1/16W(1608)
R600	1-218-716-11	s	RESISTOR,CHIP 10K 1/16W(1608)
R601	1-218-732-11	s	RESISTOR,CHIP 47K 1/16W(1608)
R602	1-218-732-11	s	RESISTOR,CHIP 47K 1/16W(1608)
R603	1-218-722-11	s	RESISTOR, CHIP 18K 1/16W 1608
R604	1-218-722-11	s	RESISTOR, CHIP 18K 1/16W 1608
R605	1-218-722-11	s	RESISTOR, CHIP 18K 1/16W 1608
R606	1-218-722-11	s	RESISTOR, CHIP 18K 1/16W 1608
R607	1-218-700-11	s	RESISTOR,CHIP 2.2K 1/16W(1608)
R608	1-218-698-11	s	RESISTOR,CHIP 1.8K 1/16W(1608)
R609	1-218-698-11	s	RESISTOR,CHIP 1.8K 1/16W(1608)
R610	1-218-752-11	s	RESISTOR,CHIP 330K 1/16W(1608)
R611	1-218-752-11	s	RESISTOR,CHIP 330K 1/16W(1608)
R612	1-218-698-11	s	RESISTOR,CHIP 1.8K 1/16W(1608)
R613	1-218-752-11	s	RESISTOR,CHIP 330K 1/16W(1608)
R614	1-218-752-11	s	RESISTOR,CHIP 330K 1/16W(1608)
R615	1-218-700-11	s	RESISTOR,CHIP 2.2K 1/16W(1608)
R616	1-218-700-11	s	RESISTOR,CHIP 2.2K 1/16W(1608)
R617	1-218-700-11	s	RESISTOR,CHIP 2.2K 1/16W(1608)
R618	1-218-700-11	s	RESISTOR,CHIP 2.2K 1/16W(1608)
R619	1-218-698-11	s	RESISTOR,CHIP 1.8K 1/16W(1608)
R620	1-218-698-11	s	RESISTOR,CHIP 1.8K 1/16W(1608)
R621	1-218-698-11	s	RESISTOR,CHIP 1.8K 1/16W(1608)
R622	1-218-698-11	s	RESISTOR,CHIP 1.8K 1/16W(1608)
R623	1-218-714-11	s	RESISTOR,CHIP 8.2K 1/16W(1608)
R624	1-218-716-11	s	RESISTOR,CHIP 10K 1/16W(1608)
R625	1-218-716-11	s	RESISTOR,CHIP 10K 1/16W(1608)
R626	1-218-736-11	s	RESISTOR,CHIP 68K 1/16W(1608)
R627	1-218-736-11	s	RESISTOR,CHIP 68K 1/16W(1608)
R628	1-218-736-11	s	RESISTOR,CHIP 68K 1/16W(1608)
R629	1-218-724-11	s	RESISTOR,CHIP 22K 1/16W(1608)
R630	1-218-692-11	s	RESISTOR,CHIP 1.0K 1/16W(1608)
R631	1-216-864-11	s	CONDUCTOR, CHIP (1608)
R633	1-216-864-11	s	CONDUCTOR, CHIP (1608)
R700	1-218-732-11	s	RESISTOR,CHIP 47K 1/16W(1608)
R701	1-218-732-11	s	RESISTOR,CHIP 47K 1/16W(1608)
R702	1-218-732-11	s	RESISTOR,CHIP 47K 1/16W(1608)
R703	1-218-732-11	s	RESISTOR,CHIP 47K 1/16W(1608)
R704	1-218-732-11	s	RESISTOR,CHIP 47K 1/16W(1608)
R705	1-218-728-11	s	RESISTOR,CHIP 33K 1/16W
R706	1-218-728-11	s	RESISTOR,CHIP 33K 1/16W
R707	1-218-732-11	s	RESISTOR,CHIP 47K 1/16W(1608)
R708	1-218-740-11	s	RESISTOR,CHIP 100K 1/16W(1608)
R709	1-218-740-11	s	RESISTOR,CHIP 100K 1/16W(1608)
R710	1-218-734-11	s	RESISTOR,CHIP 56K 1/16W(1608)
R711	1-218-728-11	s	RESISTOR,CHIP 33K 1/16W
R712	1-218-728-11	s	RESISTOR,CHIP 33K 1/16W
R713	1-218-728-11	s	RESISTOR,CHIP 33K 1/16W
R714	1-218-728-11	s	RESISTOR,CHIP 33K 1/16W
R715	1-218-706-11	s	RESISTOR,CHIP 3.9K 1/16W(1608)
R716	1-218-706-11	s	RESISTOR,CHIP 3.9K 1/16W(1608)
R717	1-218-736-11	s	RESISTOR,CHIP 68K 1/16W(1608)
R718	1-218-736-11	s	RESISTOR,CHIP 68K 1/16W(1608)
R719	1-218-736-11	s	RESISTOR,CHIP 68K 1/16W(1608)
R720	1-218-736-11	s	RESISTOR,CHIP 68K 1/16W(1608)

(SS-89 BOARD [SUFFIX 16])

Ref. No. or Q'ty	Part No.	SP	Description
R721	1-218-716-11	s	RESISTOR,CHIP 10K 1/16W(1608)
R722	1-218-716-11	s	RESISTOR,CHIP 10K 1/16W(1608)
R723	1-218-724-11	s	RESISTOR,CHIP 22K 1/16W(1608)
R724	1-218-724-11	s	RESISTOR,CHIP 22K 1/16W(1608)
R725	1-218-704-11	s	RESISTOR,CHIP 3.3K 1/16W(1608)
R726	1-218-704-11	s	RESISTOR,CHIP 3.3K 1/16W(1608)
R727	1-218-724-11	s	RESISTOR,CHIP 22K 1/16W(1608)
R728	1-218-724-11	s	RESISTOR,CHIP 22K 1/16W(1608)
R729	1-218-728-11	s	RESISTOR,CHIP 33K 1/16W
R730	1-218-728-11	s	RESISTOR,CHIP 33K 1/16W
R731	1-218-728-11	s	RESISTOR,CHIP 33K 1/16W
R732	1-218-728-11	s	RESISTOR,CHIP 33K 1/16W
R733	1-218-728-11	s	RESISTOR,CHIP 33K 1/16W
R734	1-218-728-11	s	RESISTOR,CHIP 33K 1/16W
R735	1-218-720-11	s	RESISTOR,CHIP 15K 1/16W(1608)
R736	1-218-720-11	s	RESISTOR,CHIP 15K 1/16W(1608)
R737	1-218-728-11	s	RESISTOR,CHIP 33K 1/16W
R738	1-218-728-11	s	RESISTOR,CHIP 33K 1/16W
R739	1-218-726-11	s	RESISTOR CHIP 27K 1/16W (1608)
R740	1-218-726-11	s	RESISTOR CHIP 27K 1/16W (1608)
R741	1-218-716-11	s	RESISTOR,CHIP 10K 1/16W(1608)
R742	1-218-716-11	s	RESISTOR,CHIP 10K 1/16W(1608)
R743	1-218-692-11	s	RESISTOR,CHIP 1.0K 1/16W(1608)
R744	1-218-732-11	s	RESISTOR,CHIP 47K 1/16W(1608)
R745	1-218-732-11	s	RESISTOR,CHIP 47K 1/16W(1608)
R746	1-218-732-11	s	RESISTOR,CHIP 47K 1/16W(1608)
R747	1-218-752-11	s	RESISTOR,CHIP 330K 1/16W(1608)
R748	1-218-752-11	s	RESISTOR,CHIP 330K 1/16W(1608)
R749	1-218-744-11	s	RESISTOR,CHIP 150K 1/16W
R750	1-218-744-11	s	RESISTOR,CHIP 150K 1/16W
R751	1-218-704-11	s	RESISTOR,CHIP 3.3K 1/16W(1608)
R752	1-218-732-11	s	RESISTOR,CHIP 47K 1/16W(1608)
R753	1-218-718-11	s	RESISTOR CHIP 12K 1/16W (1608)
R754	1-218-728-11	s	RESISTOR,CHIP 33K 1/16W
R755	1-218-732-11	s	RESISTOR,CHIP 47K 1/16W(1608)
R756	1-218-732-11	s	RESISTOR,CHIP 47K 1/16W(1608)
R757	1-218-692-11	s	RESISTOR,CHIP 1.0K 1/16W(1608)
R758	1-218-732-11	s	RESISTOR,CHIP 47K 1/16W(1608)
R759	1-218-732-11	s	RESISTOR,CHIP 47K 1/16W(1608)
R760	1-218-740-11	s	RESISTOR,CHIP 100K 1/16W(1608)
R761	1-218-740-11	s	RESISTOR,CHIP 100K 1/16W(1608)
R762	1-218-740-11	s	RESISTOR,CHIP 100K 1/16W(1608)
R763	1-218-740-11	s	RESISTOR,CHIP 100K 1/16W(1608)
R764	1-218-692-11	s	RESISTOR,CHIP 1.0K 1/16W(1608)
R765	1-218-716-11	s	RESISTOR,CHIP 10K 1/16W(1608)
R766	1-218-716-11	s	RESISTOR,CHIP 10K 1/16W(1608)
R767	1-218-716-11	s	RESISTOR,CHIP 10K 1/16W(1608)
R768	1-218-716-11	s	RESISTOR,CHIP 10K 1/16W(1608)
R769	1-218-726-11	s	RESISTOR CHIP 27K 1/16W (1608)
R770	1-218-726-11	s	RESISTOR CHIP 27K 1/16W (1608)
R771	1-218-740-11	s	RESISTOR,CHIP 100K 1/16W(1608)
R772	1-218-714-11	s	RESISTOR,CHIP 8.2K 1/16W(1608)
R773	1-218-740-11	s	RESISTOR,CHIP 100K 1/16W(1608)
R774	1-218-714-11	s	RESISTOR,CHIP 8.2K 1/16W(1608)
R775	1-218-732-11	s	RESISTOR,CHIP 47K 1/16W(1608)
R776	1-218-732-11	s	RESISTOR,CHIP 47K 1/16W(1608)
R777	1-218-724-11	s	RESISTOR,CHIP 22K 1/16W(1608)
R778	1-218-724-11	s	RESISTOR,CHIP 22K 1/16W(1608)
R779	1-218-732-11	s	RESISTOR,CHIP 47K 1/16W(1608)

(SS-89 BOARD [SUFFIX 16])

Ref. No. or Q'ty	Part No.	SP	Description
R780	1-218-732-11	s	RESISTOR,CHIP 47K 1/16W(1608)
R781	1-218-692-11	s	RESISTOR,CHIP 1.0K 1/16W(1608)
R782	1-218-732-11	s	RESISTOR,CHIP 47K 1/16W(1608)
R783	1-218-692-11	s	RESISTOR,CHIP 1.0K 1/16W(1608)
R784	1-218-732-11	s	RESISTOR,CHIP 47K 1/16W(1608)
R785	1-218-732-11	s	RESISTOR,CHIP 47K 1/16W(1608)
R786	1-218-732-11	s	RESISTOR,CHIP 47K 1/16W(1608)
R787	1-218-692-11	s	RESISTOR,CHIP 1.0K 1/16W(1608)
R788	1-218-726-11	s	RESISTOR CHIP 27K 1/16W (1608)
R789	1-218-726-11	s	RESISTOR CHIP 27K 1/16W (1608)
R790	1-218-724-11	s	RESISTOR,CHIP 22K 1/16W(1608)
R791	1-218-716-11	s	RESISTOR,CHIP 10K 1/16W(1608)
R792	1-218-732-11	s	RESISTOR,CHIP 47K 1/16W(1608)
R793	1-218-732-11	s	RESISTOR,CHIP 47K 1/16W(1608)
R794	1-218-732-11	s	RESISTOR,CHIP 47K 1/16W(1608)
R795	1-218-732-11	s	RESISTOR,CHIP 47K 1/16W(1608)
R796	1-218-724-11	s	RESISTOR,CHIP 22K 1/16W(1608)
R797	1-218-716-11	s	RESISTOR,CHIP 10K 1/16W(1608)
R798	1-218-732-11	s	RESISTOR,CHIP 47K 1/16W(1608)
R799	1-218-726-11	s	RESISTOR CHIP 27K 1/16W (1608)
R800	1-218-732-11	s	RESISTOR,CHIP 47K 1/16W(1608)
R801	1-218-732-11	s	RESISTOR,CHIP 47K 1/16W(1608)
R802	1-218-714-11	s	RESISTOR,CHIP 8.2K 1/16W(1608)
R803	1-218-714-11	s	RESISTOR,CHIP 8.2K 1/16W(1608)
R804	1-218-716-11	s	RESISTOR,CHIP 10K 1/16W(1608)
R805	1-218-716-11	s	RESISTOR,CHIP 10K 1/16W(1608)
R806	1-218-702-11	s	RESISTOR CHIP 2.7K 1/16W(1608)
R807	1-218-702-11	s	RESISTOR CHIP 2.7K 1/16W(1608)
R808	1-218-748-11	s	RESISTOR,CHIP 220K 1/16W(1608)
R809	1-218-748-11	s	RESISTOR,CHIP 220K 1/16W(1608)
R810	1-218-702-11	s	RESISTOR CHIP 2.7K 1/16W(1608)
R811	1-218-748-11	s	RESISTOR,CHIP 220K 1/16W(1608)
R812	1-218-702-11	s	RESISTOR CHIP 2.7K 1/16W(1608)
R813	1-218-748-11	s	RESISTOR,CHIP 220K 1/16W(1608)
R814	1-218-714-11	s	RESISTOR,CHIP 8.2K 1/16W(1608)
R815	1-218-714-11	s	RESISTOR,CHIP 8.2K 1/16W(1608)
R816	1-218-716-11	s	RESISTOR,CHIP 10K 1/16W(1608)
R817	1-218-716-11	s	RESISTOR,CHIP 10K 1/16W(1608)
R818	1-218-692-11	s	RESISTOR,CHIP 1.0K 1/16W(1608)
R819	1-218-692-11	s	RESISTOR,CHIP 1.0K 1/16W(1608)
R820	1-218-748-11	s	RESISTOR,CHIP 220K 1/16W(1608)
R821	1-218-748-11	s	RESISTOR,CHIP 220K 1/16W(1608)
R822	1-218-748-11	s	RESISTOR,CHIP 220K 1/16W(1608)
R823	1-218-748-11	s	RESISTOR,CHIP 220K 1/16W(1608)
R824	1-218-748-11	s	RESISTOR,CHIP 220K 1/16W(1608)
R825	1-218-748-11	s	RESISTOR,CHIP 220K 1/16W(1608)
R826	1-218-704-11	s	RESISTOR,CHIP 3.3K 1/16W(1608)
R827	1-218-732-11	s	RESISTOR,CHIP 47K 1/16W(1608)
R828	1-218-748-11	s	RESISTOR,CHIP 220K 1/16W(1608)
R829	1-218-748-11	s	RESISTOR,CHIP 220K 1/16W(1608)
R830	1-218-708-11	s	RESISTOR,CHIP 4.7K 1/16W(1608)
R831	1-218-708-11	s	RESISTOR,CHIP 4.7K 1/16W(1608)
R834	1-218-692-11	s	RESISTOR,CHIP 1.0K 1/16W(1608)
R835	1-218-726-11	s	RESISTOR CHIP 27K 1/16W (1608)
R900	1-218-718-11	s	RESISTOR CHIP 12K 1/16W (1608)
R901	1-218-716-11	s	RESISTOR,CHIP 10K 1/16W(1608)
R902	1-218-692-11	s	RESISTOR,CHIP 1.0K 1/16W(1608)
R903	1-218-718-11	s	RESISTOR CHIP 12K 1/16W (1608)
R904	1-218-716-11	s	RESISTOR,CHIP 10K 1/16W(1608)

(SS-89 BOARD [SUFFIX 16])

Ref. No. or Q'ty	Part No.	SP	Description
R905	1-218-718-11	s	RESISTOR CHIP 12K 1/16W (1608)
R906	1-218-716-11	s	RESISTOR,CHIP 10K 1/16W(1608)
R907	1-218-730-11	s	RESISTOR METAL FILM CHIP 39K
R908	1-218-732-11	s	RESISTOR,CHIP 47K 1/16W(1608)
R909	1-218-732-11	s	RESISTOR,CHIP 47K 1/16W(1608)
R910	1-218-732-11	s	RESISTOR,CHIP 47K 1/16W(1608)
R911	1-218-732-11	s	RESISTOR,CHIP 47K 1/16W(1608)
R912	1-218-732-11	s	RESISTOR,CHIP 47K 1/16W(1608)
R913	1-218-740-11	s	RESISTOR,CHIP 100K 1/16W(1608)
R914	1-218-740-11	s	RESISTOR,CHIP 100K 1/16W(1608)
R915	1-218-740-11	s	RESISTOR,CHIP 100K 1/16W(1608)
R916	1-218-740-11	s	RESISTOR,CHIP 100K 1/16W(1608)
R917	1-218-724-11	s	RESISTOR,CHIP 22K 1/16W(1608)
R918	1-218-724-11	s	RESISTOR,CHIP 22K 1/16W(1608)
R919	1-218-732-11	s	RESISTOR,CHIP 47K 1/16W(1608)
R920	1-218-732-11	s	RESISTOR,CHIP 47K 1/16W(1608)
R921	1-218-724-11	s	RESISTOR,CHIP 22K 1/16W(1608)
R922	1-218-720-11	s	RESISTOR,CHIP 15K 1/16W(1608)
R923	1-218-730-11	s	RESISTOR METAL FILM CHIP 39K
R924	1-218-730-11	s	RESISTOR METAL FILM CHIP 39K
R925	1-218-730-11	s	RESISTOR METAL FILM CHIP 39K
R926	1-218-718-11	s	RESISTOR CHIP 12K 1/16W (1608)
R927	1-218-752-11	s	RESISTOR,CHIP 330K 1/16W(1608)
R928	1-218-724-11	s	RESISTOR,CHIP 22K 1/16W(1608)
R1100	1-218-652-11	s	RESISTOR,CHIP 22 1/16W (1608)
R1101	1-218-652-11	s	RESISTOR,CHIP 22 1/16W (1608)
R1102	1-216-864-11	s	CONDUCTOR, CHIP (1608)
R1103	1-216-864-11	s	CONDUCTOR, CHIP (1608)
R1104	1-216-864-11	s	CONDUCTOR, CHIP (1608)
R1105	1-218-732-11	s	RESISTOR,CHIP 47K 1/16W(1608)
R1106	1-218-708-11	s	RESISTOR,CHIP 4.7K 1/16W(1608)
R1107	1-218-732-11	s	RESISTOR,CHIP 47K 1/16W(1608)
R1108	1-218-732-11	s	RESISTOR,CHIP 47K 1/16W(1608)
R1109	1-216-864-11	s	CONDUCTOR, CHIP (1608)
R1125	1-218-732-11	s	RESISTOR,CHIP 47K 1/16W(1608)
R1300	1-218-716-11	s	RESISTOR,CHIP 10K 1/16W(1608)
R1301	1-218-712-11	s	RESISTOR,METAL 6.8K 1/16W
R1302	1-218-668-11	s	RESISTOR,CHIP 100 1/16W (1608)
R1304	1-218-732-11	s	RESISTOR,CHIP 47K 1/16W(1608)
R1305	1-218-732-11	s	RESISTOR,CHIP 47K 1/16W(1608)
R1306	1-216-864-11	s	CONDUCTOR, CHIP (1608)
R1307	1-218-700-11	s	RESISTOR,CHIP 2.2K 1/16W(1608)
R1308	1-218-700-11	s	RESISTOR,CHIP 2.2K 1/16W(1608)
R1309	1-218-708-11	s	RESISTOR,CHIP 4.7K 1/16W(1608)
R1310	1-218-708-11	s	RESISTOR,CHIP 4.7K 1/16W(1608)
R1311	1-218-732-11	s	RESISTOR,CHIP 47K 1/16W(1608)
R1312	1-218-732-11	s	RESISTOR,CHIP 47K 1/16W(1608)
R1313	1-218-732-11	s	RESISTOR,CHIP 47K 1/16W(1608)
R1319	1-218-716-11	s	RESISTOR,CHIP 10K 1/16W(1608)
R1320	1-218-712-11	s	RESISTOR,METAL 6.8K 1/16W
R1321	1-216-864-11	s	CONDUCTOR, CHIP (1608)
R1340	1-218-732-11	s	RESISTOR,CHIP 47K 1/16W(1608)
R1506	1-218-740-11	s	RESISTOR,CHIP 100K 1/16W(1608)
R1507	1-218-716-11	s	RESISTOR,CHIP 10K 1/16W(1608)
R1508	1-218-716-11	s	RESISTOR,CHIP 10K 1/16W(1608)
R1509	1-218-668-11	s	RESISTOR,CHIP 100 1/16W (1608)
R1510	1-218-740-11	s	RESISTOR,CHIP 100K 1/16W(1608)
R1511	1-218-740-11	s	RESISTOR,CHIP 100K 1/16W(1608)
R1512	1-218-716-11	s	RESISTOR,CHIP 10K 1/16W(1608)

(SS-89 BOARD [SUFFIX 16])

Ref. No. or Q'ty	Part No.	SP	Description
R1513	1-218-716-11	s	RESISTOR,CHIP 10K 1/16W(1608)
R1514	1-218-652-11	s	RESISTOR,CHIP 22 1/16W (1608)
R1515	1-218-652-11	s	RESISTOR,CHIP 22 1/16W (1608)
R1516	1-218-716-11	s	RESISTOR,CHIP 10K 1/16W(1608)
R1517	1-218-716-11	s	RESISTOR,CHIP 10K 1/16W(1608)
R1518	1-218-716-11	s	RESISTOR,CHIP 10K 1/16W(1608)
R1519	1-218-652-11	s	RESISTOR,CHIP 22 1/16W (1608)
R1520	1-218-652-11	s	RESISTOR,CHIP 22 1/16W (1608)
R1522	1-218-740-11	s	RESISTOR,CHIP 100K 1/16W(1608)
R1523	1-218-740-11	s	RESISTOR,CHIP 100K 1/16W(1608)
R1524	1-218-716-11	s	RESISTOR,CHIP 10K 1/16W(1608)
R1525	1-218-716-11	s	RESISTOR,CHIP 10K 1/16W(1608)
R1526	1-216-864-11	s	CONDUCTOR, CHIP (1608)
R1527	1-218-668-11	s	RESISTOR,CHIP 100 1/16W (1608)
R1528	1-218-716-11	s	RESISTOR,CHIP 10K 1/16W(1608)
R1529	1-218-716-11	s	RESISTOR,CHIP 10K 1/16W(1608)
R1530	1-218-716-11	s	RESISTOR,CHIP 10K 1/16W(1608)
R1531	1-218-716-11	s	RESISTOR,CHIP 10K 1/16W(1608)
R1532	1-218-716-11	s	RESISTOR,CHIP 10K 1/16W(1608)
R1533	1-218-716-11	s	RESISTOR,CHIP 10K 1/16W(1608)
R1534	1-218-716-11	s	RESISTOR,CHIP 10K 1/16W(1608)
R1535	1-218-672-11	s	RESISTOR,CHIP 150 1/16W(1608)
R1536	1-218-692-11	s	RESISTOR,CHIP 1.0K 1/16W(1608)
R1537	1-218-672-11	s	RESISTOR,CHIP 150 1/16W(1608)
R1538	1-218-692-11	s	RESISTOR,CHIP 1.0K 1/16W(1608)
R1539	1-218-672-11	s	RESISTOR,CHIP 150 1/16W(1608)
R1540	1-218-692-11	s	RESISTOR,CHIP 1.0K 1/16W(1608)
R1700	1-218-732-11	s	RESISTOR,CHIP 47K 1/16W(1608)
R1701	1-218-732-11	s	RESISTOR,CHIP 47K 1/16W(1608)
R1702	1-218-732-11	s	RESISTOR,CHIP 47K 1/16W(1608)
R1703	1-218-732-11	s	RESISTOR,CHIP 47K 1/16W(1608)
R1704	1-218-732-11	s	RESISTOR,CHIP 47K 1/16W(1608)
R1705	1-218-732-11	s	RESISTOR,CHIP 47K 1/16W(1608)
R1706	1-218-668-11	s	RESISTOR,CHIP 100 1/16W (1608)
R1707	1-218-732-11	s	RESISTOR,CHIP 47K 1/16W(1608)
R1708	1-218-732-11	s	RESISTOR,CHIP 47K 1/16W(1608)
R1709	1-218-732-11	s	RESISTOR,CHIP 47K 1/16W(1608)
R1710	1-218-732-11	s	RESISTOR,CHIP 47K 1/16W(1608)
R2100	1-218-732-11	s	RESISTOR,CHIP 47K 1/16W(1608)
R2101	1-218-732-11	s	RESISTOR,CHIP 47K 1/16W(1608)
R2102	1-218-732-11	s	RESISTOR,CHIP 47K 1/16W(1608)
R2103	1-218-732-11	s	RESISTOR,CHIP 47K 1/16W(1608)
R2104	1-218-732-11	s	RESISTOR,CHIP 47K 1/16W(1608)
R2105	1-218-732-11	s	RESISTOR,CHIP 47K 1/16W(1608)
R2108	1-216-864-11	s	CONDUCTOR, CHIP (1608)
R2110	1-216-864-11	s	CONDUCTOR, CHIP (1608)
R2111	1-218-668-11	s	RESISTOR,CHIP 100 1/16W (1608)
R2112	1-218-732-11	s	RESISTOR,CHIP 47K 1/16W(1608)
R2113	1-218-716-11	s	RESISTOR,CHIP 10K 1/16W(1608)
R2114	1-218-716-11	s	RESISTOR,CHIP 10K 1/16W(1608)
R2115	1-218-652-11	s	RESISTOR,CHIP 22 1/16W (1608)
R2116	1-216-864-11	s	CONDUCTOR, CHIP (1608)
R2118	1-216-864-11	s	CONDUCTOR, CHIP (1608)
R2120	1-216-864-11	s	CONDUCTOR, CHIP (1608)
R2121	1-218-732-11	s	RESISTOR,CHIP 47K 1/16W(1608)
R2123	1-218-732-11	s	RESISTOR,CHIP 47K 1/16W(1608)
R2124	1-218-668-11	s	RESISTOR,CHIP 100 1/16W (1608)
R2125	1-218-732-11	s	RESISTOR,CHIP 47K 1/16W(1608)
R2127	1-216-864-11	s	CONDUCTOR, CHIP (1608)

(SS-89 BOARD [SUFFIX 16])

Ref. No. or Q'ty	Part No.	SP	Description
R2128	1-216-864-11	s	CONDUCTOR, CHIP (1608)
R2130	1-216-864-11	s	CONDUCTOR, CHIP (1608)
R2131	1-218-732-11	s	RESISTOR,CHIP 47K 1/16W(1608)
R2132	1-218-732-11	s	RESISTOR,CHIP 47K 1/16W(1608)
R2134	1-218-732-11	s	RESISTOR,CHIP 47K 1/16W(1608)
R2135	1-216-864-11	s	CONDUCTOR, CHIP (1608)
R2136	1-218-732-11	s	RESISTOR,CHIP 47K 1/16W(1608)
R2137	1-218-668-11	s	RESISTOR,CHIP 100 1/16W (1608)
R2138	1-218-652-11	s	RESISTOR,CHIP 22 1/16W (1608)
R2139	1-218-652-11	s	RESISTOR,CHIP 22 1/16W (1608)
R2140	1-218-652-11	s	RESISTOR,CHIP 22 1/16W (1608)
R2141	1-218-740-11	s	RESISTOR,CHIP 100K 1/16W(1608)
R2142	1-218-716-11	s	RESISTOR,CHIP 10K 1/16W(1608)
R2143	1-218-716-11	s	RESISTOR,CHIP 10K 1/16W(1608)
R2144	1-218-716-11	s	RESISTOR,CHIP 10K 1/16W(1608)
R2306	1-218-708-11	s	RESISTOR,CHIP 4.7K 1/16W(1608)
R2307	1-218-722-11	s	RESISTOR, CHIP 18K 1/16W 1608
R2308	1-218-716-11	s	RESISTOR,CHIP 10K 1/16W(1608)
R2309	1-218-710-11	s	RESISTOR,CHIP 5.6K 1/16W(1608)
R2310	1-218-716-11	s	RESISTOR,CHIP 10K 1/16W(1608)
R2311	1-218-704-11	s	RESISTOR,CHIP 3.3K 1/16W(1608)
R2312	1-218-704-11	s	RESISTOR,CHIP 3.3K 1/16W(1608)
R2313	1-218-724-11	s	RESISTOR,CHIP 22K 1/16W(1608)
R2314	1-218-724-11	s	RESISTOR,CHIP 22K 1/16W(1608)
R2315	1-218-716-11	s	RESISTOR,CHIP 10K 1/16W(1608)
R2316	1-216-857-11	s	RESISTOR,CHIP 1M 1/10W(1608)
R2317	1-218-704-11	s	RESISTOR,CHIP 3.3K 1/16W(1608)
R2318	1-218-716-11	s	RESISTOR,CHIP 10K 1/16W(1608)
R2319	1-218-698-11	s	RESISTOR,CHIP 1.8K 1/16W(1608)
R2320	1-218-748-11	s	RESISTOR,CHIP 220K 1/16W(1608)
R2321	1-218-684-11	s	RESISTOR,CHIP 470 1/16W (1608)
R2322	1-218-716-11	s	RESISTOR,CHIP 10K 1/16W(1608)
R2324	1-218-716-11	s	RESISTOR,CHIP 10K 1/16W(1608)
R2326	1-218-752-11	s	RESISTOR,CHIP 330K 1/16W(1608)
R2327	1-218-704-11	s	RESISTOR,CHIP 3.3K 1/16W(1608)
R2328	1-218-724-11	s	RESISTOR,CHIP 22K 1/16W(1608)
R2329	1-218-752-11	s	RESISTOR,CHIP 330K 1/16W(1608)
R2330	1-218-704-11	s	RESISTOR,CHIP 3.3K 1/16W(1608)
R2331	1-218-724-11	s	RESISTOR,CHIP 22K 1/16W(1608)
R2332	1-218-716-11	s	RESISTOR,CHIP 10K 1/16W(1608)
R2333	1-218-710-11	s	RESISTOR,CHIP 5.6K 1/16W(1608)
R2334	1-218-676-11	s	RESISTOR,CHIP 220 1/16W(1608)
R2335	1-218-716-11	s	RESISTOR,CHIP 10K 1/16W(1608)
R2336	1-218-716-11	s	RESISTOR,CHIP 10K 1/16W(1608)
R2337	1-218-692-11	s	RESISTOR,CHIP 1.0K 1/16W(1608)
R2338	1-218-716-11	s	RESISTOR,CHIP 10K 1/16W(1608)
R2339	1-218-720-11	s	RESISTOR,CHIP 15K 1/16W(1608)
R2340	1-218-660-91	s	RESISTOR,CHIP 47 1/16W (1608)
R2341	1-218-660-91	s	RESISTOR,CHIP 47 1/16W (1608)
R2342	1-218-660-91	s	RESISTOR,CHIP 47 1/16W (1608)
R2343	1-218-660-91	s	RESISTOR,CHIP 47 1/16W (1608)
R2344	1-218-716-11	s	RESISTOR,CHIP 10K 1/16W(1608)
R2345	1-218-716-11	s	RESISTOR,CHIP 10K 1/16W(1608)
R2346	1-218-716-11	s	RESISTOR,CHIP 10K 1/16W(1608)
R2347	1-218-716-11	s	RESISTOR,CHIP 10K 1/16W(1608)
R2348	1-216-864-11	s	CONDUCTOR, CHIP (1608)
R2349	1-216-864-11	s	CONDUCTOR, CHIP (1608)
R2350	1-218-700-11	s	RESISTOR,CHIP 2.2K 1/16W(1608)
R2351	1-218-700-11	s	RESISTOR,CHIP 2.2K 1/16W(1608)

(SS-89 BOARD [SUFFIX 16])

Ref. No. or Q'ty	Part No.	SP	Description
R2352	1-218-700-11	s	RESISTOR,CHIP 2.2K 1/16W(1608)
R2353	1-218-700-11	s	RESISTOR,CHIP 2.2K 1/16W(1608)
R2354	1-218-716-11	s	RESISTOR,CHIP 10K 1/16W(1608)
R2355	1-216-864-11	s	CONDUCTOR, CHIP (1608)
R2356	1-216-864-11	s	CONDUCTOR, CHIP (1608)
R2357	1-216-864-11	s	CONDUCTOR, CHIP (1608)
RB100	1-233-578-11	s	RESISTOR,CHIP NETWORK 47K
RB101	1-233-576-11	s	RESISTOR,CHIP NETWORK 100
RB102	1-233-810-21	s	RES, NETWORK 100K (3216)
RB103	1-233-578-11	s	RESISTOR,CHIP NETWORK 47K
RB104	1-233-575-11	s	RES, CHIP NETWORK 22
RB105	1-233-575-11	s	RES, CHIP NETWORK 22
RB106	1-233-575-11	s	RES, CHIP NETWORK 22
RB107	1-233-575-11	s	RES, CHIP NETWORK 22
RB108	1-233-575-11	s	RES, CHIP NETWORK 22
RB109	1-233-575-11	s	RES, CHIP NETWORK 22
RB110	1-233-575-11	s	RES, CHIP NETWORK 22
RB111	1-233-575-11	s	RES, CHIP NETWORK 22
RB112	1-233-575-11	s	RES, CHIP NETWORK 22
RB113	1-233-575-11	s	RES, CHIP NETWORK 22
RB114	1-233-575-11	s	RES, CHIP NETWORK 22
RB300	1-233-270-11	o	RESISTOR, NETWORK (8 GANG) 10K
RB301	1-236-908-11	s	RESISTOR,NETWORK 10K (3216)
RB302	1-233-810-21	s	RES, NETWORK 100K (3216)
RB1100	1-233-665-11	s	NETWORK, RES (8 GANG) 47K
RB1101	1-233-665-11	s	NETWORK, RES (8 GANG) 47K
RB1102	1-233-665-11	s	NETWORK, RES (8 GANG) 47K
RB1103	1-233-576-11	s	RESISTOR,CHIP NETWORK 100
RB1104	1-233-578-11	s	RESISTOR,CHIP NETWORK 47K
RB1105	1-233-575-11	s	RES, CHIP NETWORK 22
RB1106	1-233-575-11	s	RES, CHIP NETWORK 22
RB1107	1-233-575-11	s	RES, CHIP NETWORK 22
RB1108	1-233-575-11	s	RES, CHIP NETWORK 22
RB1109	1-233-575-11	s	RES, CHIP NETWORK 22
RB1110	1-233-575-11	s	RES, CHIP NETWORK 22
RB1111	1-233-575-11	s	RES, CHIP NETWORK 22
RB1112	1-233-575-11	s	RES, CHIP NETWORK 22
RB1113	1-233-575-11	s	RES, CHIP NETWORK 22
RB1114	1-233-575-11	s	RES, CHIP NETWORK 22
RB1115	1-233-575-11	s	RES, CHIP NETWORK 22
RB1116	1-233-575-11	s	RES, CHIP NETWORK 22
RB1500	1-233-270-11	o	RESISTOR, NETWORK (8 GANG) 10K
RB1501	1-233-270-11	o	RESISTOR, NETWORK (8 GANG) 10K
RB1502	1-233-665-11	s	NETWORK, RES (8 GANG) 47K
RB1700	1-233-575-11	s	RES, CHIP NETWORK 22
RB1701	1-233-578-11	s	RESISTOR,CHIP NETWORK 47K
RB1702	1-233-575-11	s	RES, CHIP NETWORK 22
RB2100	1-233-665-11	s	NETWORK, RES (8 GANG) 47K
RB2101	1-233-665-11	s	NETWORK, RES (8 GANG) 47K
RB2102	1-234-397-11	s	NETWORK, RES (8 GANG) 100K
RB2103	1-234-397-11	s	NETWORK, RES (8 GANG) 100K
RB2104	1-234-397-11	s	NETWORK, RES (8 GANG) 100K
RB2105	1-233-575-11	s	RES, CHIP NETWORK 22
RB2106	1-233-575-11	s	RES, CHIP NETWORK 22
RB2107	1-233-575-11	s	RES, CHIP NETWORK 22
RB2108	1-233-575-11	s	RES, CHIP NETWORK 22
RB2109	1-233-575-11	s	RES, CHIP NETWORK 22
RB2110	1-233-575-11	s	RES, CHIP NETWORK 22

(SS-89 BOARD [SUFFIX 16])

Ref. No. or Q'ty	Part No.	SP	Description
RB2111	1-234-397-11	s	NETWORK, RES (8 GANG) 100K
RB2112	1-234-397-11	s	NETWORK, RES (8 GANG) 100K
RB2113	1-234-397-11	s	NETWORK, RES (8 GANG) 100K
RB2114	1-233-575-11	s	RES, CHIP NETWORK 22
RB2115	1-233-575-11	s	RES, CHIP NETWORK 22
RB2116	1-233-575-11	s	RES, CHIP NETWORK 22
RB2117	1-233-575-11	s	RES, CHIP NETWORK 22
RB2118	1-233-575-11	s	RES, CHIP NETWORK 22
RB2119	1-234-397-11	s	NETWORK, RES (8 GANG) 100K
RB2120	1-234-397-11	s	NETWORK, RES (8 GANG) 100K
RB2121	1-233-477-11	s	NETWORK, RES (8 GANG) 1K
RB2122	1-234-397-11	s	NETWORK, RES (8 GANG) 100K
RB2123	1-233-575-11	s	RES, CHIP NETWORK 22
RB2124	1-233-575-11	s	RES, CHIP NETWORK 22
RB2125	1-233-575-11	s	RES, CHIP NETWORK 22
RB2126	1-233-575-11	s	RES, CHIP NETWORK 22
RB2127	1-233-575-11	s	RES, CHIP NETWORK 22
RB2128	1-233-575-11	s	RES, CHIP NETWORK 22
RB2129	1-233-575-11	s	RES, CHIP NETWORK 22
RB2130	1-233-575-11	s	RES, CHIP NETWORK 22
RV300	1-241-265-11	s	RESISTOR ADJ 20K (CERMET)
S100	1-572-473-11	s	SWITCH, TACTIL
S101	1-692-270-41	s	SWITCH, SLIDE
S300	1-572-473-11	s	SWITCH, TACTIL
S900	1-572-473-11	s	SWITCH, TACTIL
S1100	1-572-473-11	s	SWITCH, TACTIL
S1500	1-572-473-11	s	SWITCH, TACTIL
S1501	1-692-271-31	s	SWITCH, SLIDE
S1502	1-692-271-31	s	SWITCH, SLIDE
X100	1-781-810-21	s	OSCILLATOR, CRYSTAL (SMD)
X1100	1-781-810-21	s	OSCILLATOR, CRYSTAL (SMD)

SS-89 BOARD [SUFFIX 17-]

[Lot No. 421 -] HDW-2000, M2000/P, M2100/P, A2100
[Lot No. 4C2 -] HDW-D2000
[Lot No. 462 -] HDW-S2000/P
[Lot No. 434 -] DVW-2000/P, M2000/P
[Lot No. 421 -] MSW-2000, M2000/P, A2000/P, M2100/P
[Lot No. 495 -] MSW-M2000E/P, M2100E/P

Ref. No. or Q'ty	Part No.	SP	Description
1pc	A-8324-880-D	s	MOUNTED CIRCUIT BOARD, SS-89
C100	1-131-992-11	s	CAP, CERAMIC 100000PF F 1608
C101	1-131-992-11	s	CAP, CERAMIC 100000PF F 1608
C102	1-131-992-11	s	CAP, CERAMIC 100000PF F 1608
C103	1-131-992-11	s	CAP, CERAMIC 100000PF F 1608
C104	1-131-992-11	s	CAP, CERAMIC 100000PF F 1608
C105	1-131-992-11	s	CAP, CERAMIC 100000PF F 1608
C108	1-131-992-11	s	CAP, CERAMIC 100000PF F 1608
C109	1-131-992-11	s	CAP, CERAMIC 100000PF F 1608
C110	1-131-992-11	s	CAP, CERAMIC 100000PF F 1608
C111	1-131-992-11	s	CAP, CERAMIC 100000PF F 1608
C112	1-131-992-11	s	CAP, CERAMIC 100000PF F 1608
C113	1-131-992-11	s	CAP, CERAMIC 100000PF F 1608
C114	1-131-992-11	s	CAP, CERAMIC 100000PF F 1608
C116	1-131-992-11	s	CAP, CERAMIC 100000PF F 1608
C121	1-131-992-11	s	CAP, CERAMIC 100000PF F 1608
C122	1-131-992-11	s	CAP, CERAMIC 100000PF F 1608
C300	1-131-992-11	s	CAP, CERAMIC 100000PF F 1608
C301	1-131-992-11	s	CAP, CERAMIC 100000PF F 1608
C302	1-115-416-11	s	CAPACITOR,CERAMIC 1000PF/25V
C303	1-115-416-11	s	CAPACITOR,CERAMIC 1000PF/25V
C304	1-164-739-11	s	CAPACITOR CERAMIC 560PF (1608)
C305	1-164-227-11	s	CAPACITOR,CERAMIC 0.022MF/25V
C306	1-164-227-11	s	CAPACITOR,CERAMIC 0.022MF/25V
C307	1-164-227-11	s	CAPACITOR,CERAMIC 0.022MF/25V
C308	1-164-227-11	s	CAPACITOR,CERAMIC 0.022MF/25V
C309	1-164-227-11	s	CAPACITOR,CERAMIC 0.022MF/25V
C310	1-164-227-11	s	CAPACITOR,CERAMIC 0.022MF/25V
C311	1-162-927-11	s	CAPACITOR,CERAMIC 100PF/50V CH
C312	1-162-927-11	s	CAPACITOR,CERAMIC 100PF/50V CH
C313	1-162-927-11	s	CAPACITOR,CERAMIC 100PF/50V CH
C314	1-162-927-11	s	CAPACITOR,CERAMIC 100PF/50V CH
C315	1-162-927-11	s	CAPACITOR,CERAMIC 100PF/50V CH
C316	1-162-927-11	s	CAPACITOR,CERAMIC 100PF/50V CH
C317	1-162-927-11	s	CAPACITOR,CERAMIC 100PF/50V CH
C318	1-131-992-11	s	CAP, CERAMIC 100000PF F 1608
C320	1-131-992-11	s	CAP, CERAMIC 100000PF F 1608
C321	1-164-227-11	s	CAPACITOR,CERAMIC 0.022MF/25V
C322	1-164-227-11	s	CAPACITOR,CERAMIC 0.022MF/25V
C323	1-162-927-11	s	CAPACITOR,CERAMIC 100PF/50V CH
C324	1-164-227-11	s	CAPACITOR,CERAMIC 0.022MF/25V
C326	1-164-227-11	s	CAPACITOR,CERAMIC 0.022MF/25V
C327	1-164-227-11	s	CAPACITOR,CERAMIC 0.022MF/25V
C328	1-164-227-11	s	CAPACITOR,CERAMIC 0.022MF/25V
C329	1-164-227-11	s	CAPACITOR,CERAMIC 0.022MF/25V
C330	1-164-227-11	s	CAPACITOR,CERAMIC 0.022MF/25V
C331	1-164-227-11	s	CAPACITOR,CERAMIC 0.022MF/25V
C332	1-164-227-11	s	CAPACITOR,CERAMIC 0.022MF/25V
C333	1-162-927-11	s	CAPACITOR,CERAMIC 100PF/50V CH
C334	1-162-927-11	s	CAPACITOR,CERAMIC 100PF/50V CH
C335	1-162-927-11	s	CAPACITOR,CERAMIC 100PF/50V CH
C336	1-162-927-11	s	CAPACITOR,CERAMIC 100PF/50V CH
C337	1-162-927-11	s	CAPACITOR,CERAMIC 100PF/50V CH
C338	1-162-927-11	s	CAPACITOR,CERAMIC 100PF/50V CH

(SS-89 BOARD [SUFFIX 17-])

Ref. No. or Q'ty	Part No.	SP	Description
C339	1-126-391-11	s	CAPACITOR ELECT 47MF/6.3V(105)
C340	1-164-227-11	s	CAPACITOR,CERAMIC 0.022MF/25V
C341	1-126-391-11	s	CAPACITOR ELECT 47MF/6.3V(105)
C342	1-164-227-11	s	CAPACITOR,CERAMIC 0.022MF/25V
C343	1-131-992-11	s	CAP, CERAMIC 100000PF F 1608
C344	1-131-992-11	s	CAP, CERAMIC 100000PF F 1608
C345	1-131-992-11	s	CAP, CERAMIC 100000PF F 1608
C346	1-131-992-11	s	CAP, CERAMIC 100000PF F 1608
C347	1-131-992-11	s	CAP, CERAMIC 100000PF F 1608
C348	1-131-992-11	s	CAP, CERAMIC 100000PF F 1608
C349	1-131-992-11	s	CAP, CERAMIC 100000PF F 1608
C350	1-131-992-11	s	CAP, CERAMIC 100000PF F 1608
C351	1-131-992-11	s	CAP, CERAMIC 100000PF F 1608
C352	1-131-992-11	s	CAP, CERAMIC 100000PF F 1608
C353	1-131-992-11	s	CAP, CERAMIC 100000PF F 1608
C354	1-131-992-11	s	CAP, CERAMIC 100000PF F 1608
C355	1-131-992-11	s	CAP, CERAMIC 100000PF F 1608
C356	1-131-992-11	s	CAP, CERAMIC 100000PF F 1608
C357	1-131-992-11	s	CAP, CERAMIC 100000PF F 1608
C358	1-131-992-11	s	CAP, CERAMIC 100000PF F 1608
C359	1-131-992-11	s	CAP, CERAMIC 100000PF F 1608
C360	1-131-992-11	s	CAP, CERAMIC 100000PF F 1608
C361	1-131-992-11	s	CAP, CERAMIC 100000PF F 1608
C362	1-131-992-11	s	CAP, CERAMIC 100000PF F 1608
C363	1-131-992-11	s	CAP, CERAMIC 100000PF F 1608
C364	1-131-992-11	s	CAP, CERAMIC 100000PF F 1608
C365	1-131-992-11	s	CAP, CERAMIC 100000PF F 1608
C366	1-131-992-11	s	CAP, CERAMIC 100000PF F 1608
C367	1-131-992-11	s	CAP, CERAMIC 100000PF F 1608
C368	1-131-992-11	s	CAP, CERAMIC 100000PF F 1608
C369	1-126-391-11	s	CAPACITOR ELECT 47MF/6.3V(105)
C370	1-126-391-11	s	CAPACITOR ELECT 47MF/6.3V(105)
C371	1-162-970-11	s	CAPACITOR CERAMIC 0.01MF/25V B
C372	1-115-416-11	s	CAPACITOR,CERAMIC 1000PF/25V
C373	1-162-970-11	s	CAPACITOR CERAMIC 0.01MF/25V B
C374	1-115-416-11	s	CAPACITOR,CERAMIC 1000PF/25V
C375	1-131-992-11	s	CAP, CERAMIC 100000PF F 1608
C376	1-131-992-11	s	CAP, CERAMIC 100000PF F 1608
C377	1-131-992-11	s	CAP, CERAMIC 100000PF F 1608
C378	1-131-992-11	s	CAP, CERAMIC 100000PF F 1608
C500	1-164-227-11	s	CAPACITOR,CERAMIC 0.022MF/25V
C501	1-125-891-11	s	CAPACITOR CERAMIC 0.47MF/10V
C502	1-164-227-11	s	CAPACITOR,CERAMIC 0.022MF/25V
C503	1-126-396-11	s	CAPACITOR,ELECT 47MF/16V(CHIP)
C505	1-164-227-11	s	CAPACITOR,CERAMIC 0.022MF/25V
C509	1-115-416-11	s	CAPACITOR,CERAMIC 1000PF/25V
C510	1-164-227-11	s	CAPACITOR,CERAMIC 0.022MF/25V
C511	1-164-227-11	s	CAPACITOR,CERAMIC 0.022MF/25V
C512	1-115-416-11	s	CAPACITOR,CERAMIC 1000PF/25V
C513	1-164-227-11	s	CAPACITOR,CERAMIC 0.022MF/25V
C514	1-164-227-11	s	CAPACITOR,CERAMIC 0.022MF/25V
C515	1-164-227-11	s	CAPACITOR,CERAMIC 0.022MF/25V
C516	1-164-227-11	s	CAPACITOR,CERAMIC 0.022MF/25V
C517	1-164-227-11	s	CAPACITOR,CERAMIC 0.022MF/25V
C518	1-115-416-11	s	CAPACITOR,CERAMIC 1000PF/25V
C519	1-164-227-11	s	CAPACITOR,CERAMIC 0.022MF/25V
C520	1-162-970-11	s	CAPACITOR CERAMIC 0.01MF/25V B
C521	1-126-391-11	s	CAPACITOR ELECT 47MF/6.3V(105)
C523	1-164-227-11	s	CAPACITOR,CERAMIC 0.022MF/25V

(SS-89 BOARD [SUFFIX 17-])

Ref. No. or Q'ty	Part No.	SP	Description
C524	1-164-227-11	s	CAPACITOR,CERAMIC 0.022MF/25V
C525	1-164-227-11	s	CAPACITOR,CERAMIC 0.022MF/25V
C526	1-164-227-11	s	CAPACITOR,CERAMIC 0.022MF/25V
C527	1-164-227-11	s	CAPACITOR,CERAMIC 0.022MF/25V
C528	1-164-227-11	s	CAPACITOR,CERAMIC 0.022MF/25V
C529	1-162-970-11	s	CAPACITOR CERAMIC 0.01MF/25V B
C530	1-164-227-11	s	CAPACITOR,CERAMIC 0.022MF/25V
C531	1-164-227-11	s	CAPACITOR,CERAMIC 0.022MF/25V
C534	1-164-227-11	s	CAPACITOR,CERAMIC 0.022MF/25V
C535	1-164-227-11	s	CAPACITOR,CERAMIC 0.022MF/25V
C536	1-126-394-11	s	CAPACITOR,ELECT 10MF/16V(CHIP)
C537	1-115-416-11	s	CAPACITOR,CERAMIC 1000PF/25V
C538	1-115-416-11	s	CAPACITOR,CERAMIC 1000PF/25V
C539	1-164-227-11	s	CAPACITOR,CERAMIC 0.022MF/25V
C540	1-164-227-11	s	CAPACITOR,CERAMIC 0.022MF/25V
C541	1-165-176-11	s	CAPACITOR,CERAMIC 47000PF/16V
C542	1-165-176-11	s	CAPACITOR,CERAMIC 47000PF/16V
C543	1-115-416-11	s	CAPACITOR,CERAMIC 1000PF/25V
C546	1-115-416-11	s	CAPACITOR,CERAMIC 1000PF/25V
C551	1-115-416-11	s	CAPACITOR,CERAMIC 1000PF/25V
C552	1-164-227-11	s	CAPACITOR,CERAMIC 0.022MF/25V
C553	1-164-227-11	s	CAPACITOR,CERAMIC 0.022MF/25V
C554	1-164-227-11	s	CAPACITOR,CERAMIC 0.022MF/25V
C555	1-162-970-11	s	CAPACITOR CERAMIC 0.01MF/25V B
C556	1-162-970-11	s	CAPACITOR CERAMIC 0.01MF/25V B
C557	1-162-970-11	s	CAPACITOR CERAMIC 0.01MF/25V B
C558	1-131-992-11	s	CAP, CERAMIC 100000PF F 1608
C559	1-131-992-11	s	CAP, CERAMIC 100000PF F 1608
C560	1-162-970-11	s	CAPACITOR CERAMIC 0.01MF/25V B
C561	1-164-218-11	s	CAPACITOR,CERAMIC 180PF/50V CH
C562	1-164-218-11	s	CAPACITOR,CERAMIC 180PF/50V CH
C563	1-164-227-11	s	CAPACITOR,CERAMIC 0.022MF/25V
C564	1-164-227-11	s	CAPACITOR,CERAMIC 0.022MF/25V
C565	1-162-966-11	s	CAPACITOR,CERAMIC 2200PF/50V B
C566	1-164-230-11	s	CAPACITOR,CERAMIC 220PF/50V
C567	1-164-230-11	s	CAPACITOR,CERAMIC 220PF/50V
C568	1-164-218-11	s	CAPACITOR,CERAMIC 180PF/50V CH
C569	1-164-218-11	s	CAPACITOR,CERAMIC 180PF/50V CH
C570	1-164-230-11	s	CAPACITOR,CERAMIC 220PF/50V
C571	1-164-230-11	s	CAPACITOR,CERAMIC 220PF/50V
C572	1-164-227-11	s	CAPACITOR,CERAMIC 0.022MF/25V
C573	1-164-227-11	s	CAPACITOR,CERAMIC 0.022MF/25V
C574	1-131-992-11	s	CAP, CERAMIC 100000PF F 1608
C575	1-164-227-11	s	CAPACITOR,CERAMIC 0.022MF/25V
C576	1-164-227-11	s	CAPACITOR,CERAMIC 0.022MF/25V
C577	1-131-992-11	s	CAP, CERAMIC 100000PF F 1608
C578	1-131-992-11	s	CAP, CERAMIC 100000PF F 1608
C579	1-131-992-11	s	CAP, CERAMIC 100000PF F 1608
C580	1-131-992-11	s	CAP, CERAMIC 100000PF F 1608
C581	1-131-992-11	s	CAP, CERAMIC 100000PF F 1608
C700	1-164-315-11	s	CAPACITOR,CERAMIC 470PF/50V CH
C701	1-164-315-11	s	CAPACITOR,CERAMIC 470PF/50V CH
C702	1-131-992-11	s	CAP, CERAMIC 100000PF F 1608
C703	1-164-227-11	s	CAPACITOR,CERAMIC 0.022MF/25V
C704	1-164-227-11	s	CAPACITOR,CERAMIC 0.022MF/25V
C705	1-164-227-11	s	CAPACITOR,CERAMIC 0.022MF/25V
C706	1-164-227-11	s	CAPACITOR,CERAMIC 0.022MF/25V
C707	1-131-992-11	s	CAP, CERAMIC 100000PF F 1608
C708	1-131-992-11	s	CAP, CERAMIC 100000PF F 1608

(SS-89 BOARD [SUFFIX 17-])

Ref. No. or Q'ty	Part No.	SP	Description
C709	1-131-992-11	s	CAP, CERAMIC 100000PF F 1608
C710	1-131-992-11	s	CAP, CERAMIC 100000PF F 1608
C711	1-131-992-11	s	CAP, CERAMIC 100000PF F 1608
C712	1-131-992-11	s	CAP, CERAMIC 100000PF F 1608
C713	1-162-970-11	s	CAPACITOR CERAMIC 0.01MF/25V B
C714	1-162-970-11	s	CAPACITOR CERAMIC 0.01MF/25V B
C715	1-162-970-11	s	CAPACITOR CERAMIC 0.01MF/25V B
C716	1-164-227-11	s	CAPACITOR,CERAMIC 0.022MF/25V
C717	1-162-968-11	s	CAPACITOR,CERAMIC 4700PF/50V B
C718	1-164-227-11	s	CAPACITOR,CERAMIC 0.022MF/25V
C719	1-115-416-11	s	CAPACITOR,CERAMIC 1000PF/25V
C720	1-164-227-11	s	CAPACITOR,CERAMIC 0.022MF/25V
C721	1-162-968-11	s	CAPACITOR,CERAMIC 4700PF/50V B
C722	1-164-227-11	s	CAPACITOR,CERAMIC 0.022MF/25V
C723	1-162-968-11	s	CAPACITOR,CERAMIC 4700PF/50V B
C724	1-162-970-11	s	CAPACITOR CERAMIC 0.01MF/25V B
C725	1-162-970-11	s	CAPACITOR CERAMIC 0.01MF/25V B
C726	1-162-970-11	s	CAPACITOR CERAMIC 0.01MF/25V B
C727	1-162-970-11	s	CAPACITOR CERAMIC 0.01MF/25V B
C728	1-164-227-11	s	CAPACITOR,CERAMIC 0.022MF/25V
C729	1-164-227-11	s	CAPACITOR,CERAMIC 0.022MF/25V
C730	1-164-227-11	s	CAPACITOR,CERAMIC 0.022MF/25V
C731	1-164-227-11	s	CAPACITOR,CERAMIC 0.022MF/25V
C732	1-164-227-11	s	CAPACITOR,CERAMIC 0.022MF/25V
C733	1-164-227-11	s	CAPACITOR,CERAMIC 0.022MF/25V
C734	1-164-227-11	s	CAPACITOR,CERAMIC 0.022MF/25V
C735	1-164-227-11	s	CAPACITOR,CERAMIC 0.022MF/25V
C736	1-164-227-11	s	CAPACITOR,CERAMIC 0.022MF/25V
C737	1-164-227-11	s	CAPACITOR,CERAMIC 0.022MF/25V
C738	1-164-227-11	s	CAPACITOR,CERAMIC 0.022MF/25V
C739	1-131-992-11	s	CAP, CERAMIC 100000PF F 1608
C740	1-131-992-11	s	CAP, CERAMIC 100000PF F 1608
C741	1-164-227-11	s	CAPACITOR,CERAMIC 0.022MF/25V
C742	1-164-227-11	s	CAPACITOR,CERAMIC 0.022MF/25V
C743	1-131-992-11	s	CAP, CERAMIC 100000PF F 1608
C744	1-131-992-11	s	CAP, CERAMIC 100000PF F 1608
C745	1-127-715-11	s	CAPACITOR,CERAMIC 0.22MF B1608
C746	1-127-715-11	s	CAPACITOR,CERAMIC 0.22MF B1608
C747	1-164-227-11	s	CAPACITOR,CERAMIC 0.022MF/25V
C748	1-164-227-11	s	CAPACITOR,CERAMIC 0.022MF/25V
C749	1-131-992-11	s	CAP, CERAMIC 100000PF F 1608
C750	1-131-992-11	s	CAP, CERAMIC 100000PF F 1608
C751	1-131-992-11	s	CAP, CERAMIC 100000PF F 1608
C752	1-164-227-11	s	CAPACITOR,CERAMIC 0.022MF/25V
C753	1-164-227-11	s	CAPACITOR,CERAMIC 0.022MF/25V
C754	1-131-992-11	s	CAP, CERAMIC 100000PF F 1608
C755	1-164-227-11	s	CAPACITOR,CERAMIC 0.022MF/25V
C756	1-164-227-11	s	CAPACITOR,CERAMIC 0.022MF/25V
C757	1-162-966-11	s	CAPACITOR,CERAMIC 2200PF/50V B
C758	1-162-966-11	s	CAPACITOR,CERAMIC 2200PF/50V B
C759	1-164-227-11	s	CAPACITOR,CERAMIC 0.022MF/25V
C760	1-164-227-11	s	CAPACITOR,CERAMIC 0.022MF/25V
C761	1-162-968-11	s	CAPACITOR,CERAMIC 4700PF/50V B
C762	1-162-968-11	s	CAPACITOR,CERAMIC 4700PF/50V B
C763	1-164-227-11	s	CAPACITOR,CERAMIC 0.022MF/25V
C764	1-162-968-11	s	CAPACITOR,CERAMIC 4700PF/50V B
C765	1-162-968-11	s	CAPACITOR,CERAMIC 4700PF/50V B
C766	1-164-227-11	s	CAPACITOR,CERAMIC 0.022MF/25V
C767	1-162-919-11	s	CAPACITOR,CERAMIC 22PF/50V CH

(SS-89 BOARD [SUFFIX 17-])

Ref. No. or Q'ty	Part No.	SP	Description
C768	1-162-919-11	s	CAPACITOR,CERAMIC 22PF/50V CH
C769	1-131-992-11	s	CAP, CERAMIC 100000PF F 1608
C770	1-131-992-11	s	CAP, CERAMIC 100000PF F 1608
C771	1-164-227-11	s	CAPACITOR,CERAMIC 0.022MF/25V
C772	1-164-227-11	s	CAPACITOR,CERAMIC 0.022MF/25V
C773	1-131-992-11	s	CAP, CERAMIC 100000PF F 1608
C774	1-131-992-11	s	CAP, CERAMIC 100000PF F 1608
C775	1-164-227-11	s	CAPACITOR,CERAMIC 0.022MF/25V
C776	1-164-227-11	s	CAPACITOR,CERAMIC 0.022MF/25V
C777	1-131-992-11	s	CAP, CERAMIC 100000PF F 1608
C778	1-131-992-11	s	CAP, CERAMIC 100000PF F 1608
C779	1-115-416-11	s	CAPACITOR,CERAMIC 1000PF/25V
C780	1-115-416-11	s	CAPACITOR,CERAMIC 1000PF/25V
C781	1-115-416-11	s	CAPACITOR,CERAMIC 1000PF/25V
C782	1-115-416-11	s	CAPACITOR,CERAMIC 1000PF/25V
C783	1-115-416-11	s	CAPACITOR,CERAMIC 1000PF/25V
C784	1-115-416-11	s	CAPACITOR,CERAMIC 1000PF/25V
C785	1-115-416-11	s	CAPACITOR,CERAMIC 1000PF/25V
C786	1-115-416-11	s	CAPACITOR,CERAMIC 1000PF/25V
C787	1-164-227-11	s	CAPACITOR,CERAMIC 0.022MF/25V
C788	1-164-227-11	s	CAPACITOR,CERAMIC 0.022MF/25V
C789	1-164-227-11	s	CAPACITOR,CERAMIC 0.022MF/25V
C790	1-125-891-11	s	CAPACITOR CERAMIC 0.47MF/10V
C793	1-131-992-11	s	CAP, CERAMIC 100000PF F 1608
C796	1-126-396-11	s	CAPACITOR,ELECT 47MF/16V(CHIP)
C797	1-131-992-11	s	CAP, CERAMIC 100000PF F 1608
C798	1-131-992-11	s	CAP, CERAMIC 100000PF F 1608
C799	1-164-227-11	s	CAPACITOR,CERAMIC 0.022MF/25V
C800	1-164-227-11	s	CAPACITOR,CERAMIC 0.022MF/25V
C801	1-164-227-11	s	CAPACITOR,CERAMIC 0.022MF/25V
C900	1-127-573-11	s	CAPACITOR,CERAMIC 1MFB(2012)
C901	1-127-715-11	s	CAPACITOR,CERAMIC 0.22MF B1608
C902	1-162-966-11	s	CAPACITOR,CERAMIC 2200PF/50V B
C903	1-127-715-11	s	CAPACITOR,CERAMIC 0.22MF B1608
C904	1-127-715-11	s	CAPACITOR,CERAMIC 0.22MF B1608
C905	1-127-573-11	s	CAPACITOR,CERAMIC 1MFB(2012)
C906	1-127-573-11	s	CAPACITOR,CERAMIC 1MFB(2012)
C907	1-131-992-11	s	CAP, CERAMIC 100000PF F 1608
C908	1-131-992-11	s	CAP, CERAMIC 100000PF F 1608
C909	1-131-992-11	s	CAP, CERAMIC 100000PF F 1608
C910	1-125-891-11	s	CAPACITOR CERAMIC 0.47MF/10V
C911	1-125-891-11	s	CAPACITOR CERAMIC 0.47MF/10V
C912	1-131-992-11	s	CAP, CERAMIC 100000PF F 1608
C913	1-131-992-11	s	CAP, CERAMIC 100000PF F 1608
C914	1-126-391-11	s	CAPACITOR ELECT 47MF/6.3V(105)
C915	1-126-391-11	s	CAPACITOR ELECT 47MF/6.3V(105)
C916	1-126-396-11	s	CAPACITOR,ELECT 47MF/16V(CHIP)
C917	1-126-396-11	s	CAPACITOR,ELECT 47MF/16V(CHIP)
C918	1-127-715-11	s	CAPACITOR,CERAMIC 0.22MF B1608
C919	1-126-396-11	s	CAPACITOR,ELECT 47MF/16V(CHIP)
C920	1-115-416-11	s	CAPACITOR,CERAMIC 1000PF/25V
C921	1-115-416-11	s	CAPACITOR,CERAMIC 1000PF/25V
C922	1-126-394-11	s	CAPACITOR,ELECT 10MF/16V(CHIP)
C923	1-127-715-11	s	CAPACITOR,CERAMIC 0.22MF B1608
C1100	1-131-992-11	s	CAP, CERAMIC 100000PF F 1608
C1101	1-131-992-11	s	CAP, CERAMIC 100000PF F 1608
C1102	1-131-992-11	s	CAP, CERAMIC 100000PF F 1608
C1103	1-131-992-11	s	CAP, CERAMIC 100000PF F 1608
C1104	1-131-992-11	s	CAP, CERAMIC 100000PF F 1608

(SS-89 BOARD [SUFFIX 17-])

Ref. No. or Q'ty	Part No.	SP	Description
C1105	1-131-992-11	s	CAP, CERAMIC 100000PF F 1608
C1106	1-131-992-11	s	CAP, CERAMIC 100000PF F 1608
C1107	1-131-992-11	s	CAP, CERAMIC 100000PF F 1608
C1108	1-131-992-11	s	CAP, CERAMIC 100000PF F 1608
C1109	1-131-992-11	s	CAP, CERAMIC 100000PF F 1608
C1110	1-131-992-11	s	CAP, CERAMIC 100000PF F 1608
C1111	1-131-992-11	s	CAP, CERAMIC 100000PF F 1608
C1112	1-131-992-11	s	CAP, CERAMIC 100000PF F 1608
C1113	1-131-992-11	s	CAP, CERAMIC 100000PF F 1608
C1118	1-131-992-11	s	CAP, CERAMIC 100000PF F 1608
C1119	1-131-992-11	s	CAP, CERAMIC 100000PF F 1608
C1120	1-131-992-11	s	CAP, CERAMIC 100000PF F 1608
C1121	1-131-992-11	s	CAP, CERAMIC 100000PF F 1608
C1122	1-131-992-11	s	CAP, CERAMIC 100000PF F 1608
C1300	1-131-992-11	s	CAP, CERAMIC 100000PF F 1608
C1301	1-131-992-11	s	CAP, CERAMIC 100000PF F 1608
C1302	1-131-992-11	s	CAP, CERAMIC 100000PF F 1608
C1303	1-131-992-11	s	CAP, CERAMIC 100000PF F 1608
C1304	1-131-992-11	s	CAP, CERAMIC 100000PF F 1608
C1305	1-126-391-11	s	CAPACITOR ELECT 47MF/6.3V(105)
C1306	1-131-992-11	s	CAP, CERAMIC 100000PF F 1608
C1307	1-131-992-11	s	CAP, CERAMIC 100000PF F 1608
C1308	1-131-992-11	s	CAP, CERAMIC 100000PF F 1608
C1309	1-131-992-11	s	CAP, CERAMIC 100000PF F 1608
C1310	1-131-992-11	s	CAP, CERAMIC 100000PF F 1608
C1311	1-131-992-11	s	CAP, CERAMIC 100000PF F 1608
C1312	1-131-992-11	s	CAP, CERAMIC 100000PF F 1608
C1313	1-131-992-11	s	CAP, CERAMIC 100000PF F 1608
C1314	1-131-992-11	s	CAP, CERAMIC 100000PF F 1608
C1315	1-131-992-11	s	CAP, CERAMIC 100000PF F 1608
C1316	1-131-992-11	s	CAP, CERAMIC 100000PF F 1608
C1317	1-131-992-11	s	CAP, CERAMIC 100000PF F 1608
C1318	1-131-992-11	s	CAP, CERAMIC 100000PF F 1608
C1319	1-131-992-11	s	CAP, CERAMIC 100000PF F 1608
C1320	1-131-992-11	s	CAP, CERAMIC 100000PF F 1608
C1321	1-131-992-11	s	CAP, CERAMIC 100000PF F 1608
C1322	1-131-992-11	s	CAP, CERAMIC 100000PF F 1608
C1323	1-131-992-11	s	CAP, CERAMIC 100000PF F 1608
C1324	1-131-992-11	s	CAP, CERAMIC 100000PF F 1608
C1325	1-131-992-11	s	CAP, CERAMIC 100000PF F 1608
C1326	1-131-992-11	s	CAP, CERAMIC 100000PF F 1608
C1327	1-131-992-11	s	CAP, CERAMIC 100000PF F 1608
C1328	1-131-992-11	s	CAP, CERAMIC 100000PF F 1608
C1329	1-131-992-11	s	CAP, CERAMIC 100000PF F 1608
C1330	1-131-992-11	s	CAP, CERAMIC 100000PF F 1608
C1331	1-131-992-11	s	CAP, CERAMIC 100000PF F 1608
C1332	1-126-391-11	s	CAPACITOR ELECT 47MF/6.3V(105)
C1333	1-131-992-11	s	CAP, CERAMIC 100000PF F 1608
C1334	1-131-992-11	s	CAP, CERAMIC 100000PF F 1608
C1335	1-131-992-11	s	CAP, CERAMIC 100000PF F 1608
C1336	1-131-992-11	s	CAP, CERAMIC 100000PF F 1608
C1337	1-131-992-11	s	CAP, CERAMIC 100000PF F 1608
C1338	1-131-992-11	s	CAP, CERAMIC 100000PF F 1608
C1339	1-131-992-11	s	CAP, CERAMIC 100000PF F 1608
C1340	1-126-391-11	s	CAPACITOR ELECT 47MF/6.3V(105)
C1341	1-126-391-11	s	CAPACITOR ELECT 47MF/6.3V(105)
C1342	1-162-970-11	s	CAPACITOR CERAMIC 0.01MF/25V B
C1343	1-131-992-11	s	CAP, CERAMIC 100000PF F 1608
C1344	1-131-992-11	s	CAP, CERAMIC 100000PF F 1608

(SS-89 BOARD [SUFFIX 17-])

Ref. No. or Q'ty	Part No.	SP	Description
C1502	1-131-992-11	s	CAP, CERAMIC 100000PF F 1608
C1503	1-131-992-11	s	CAP, CERAMIC 100000PF F 1608
C1504	1-131-992-11	s	CAP, CERAMIC 100000PF F 1608
C1505	1-162-915-11	s	CAPACITOR,CERAMIC 10PF/50V CH
C1506	1-162-915-11	s	CAPACITOR,CERAMIC 10PF/50V CH
C1507	1-162-915-11	s	CAPACITOR,CERAMIC 10PF/50V CH
C1508	1-162-915-11	s	CAPACITOR,CERAMIC 10PF/50V CH
C1509	1-162-915-11	s	CAPACITOR,CERAMIC 10PF/50V CH
C1510	1-162-915-11	s	CAPACITOR,CERAMIC 10PF/50V CH
C1511	1-162-915-11	s	CAPACITOR,CERAMIC 10PF/50V CH
C1512	1-162-915-11	s	CAPACITOR,CERAMIC 10PF/50V CH
C1513	1-162-915-11	s	CAPACITOR,CERAMIC 10PF/50V CH
C1514	1-131-992-11	s	CAP, CERAMIC 100000PF F 1608
C1515	1-131-992-11	s	CAP, CERAMIC 100000PF F 1608
C1516	1-107-826-11	s	CAPACITOR,CHIP CERAMIC 0.1MF
C1517	1-107-826-11	s	CAPACITOR,CHIP CERAMIC 0.1MF
C1518	1-107-826-11	s	CAPACITOR,CHIP CERAMIC 0.1MF
C1519	1-131-992-11	s	CAP, CERAMIC 100000PF F 1608
C1520	1-107-826-11	s	CAPACITOR,CHIP CERAMIC 0.1MF
C1521	1-107-826-11	s	CAPACITOR,CHIP CERAMIC 0.1MF
C1522	1-131-992-11	s	CAP, CERAMIC 100000PF F 1608
C1523	1-131-992-11	s	CAP, CERAMIC 100000PF F 1608
C1524	1-131-992-11	s	CAP, CERAMIC 100000PF F 1608
C1525	1-131-992-11	s	CAP, CERAMIC 100000PF F 1608
C1526	1-131-992-11	s	CAP, CERAMIC 100000PF F 1608
C1527	1-131-992-11	s	CAP, CERAMIC 100000PF F 1608
C1528	1-131-992-11	s	CAP, CERAMIC 100000PF F 1608
C1529	1-131-992-11	s	CAP, CERAMIC 100000PF F 1608
C1530	1-131-992-11	s	CAP, CERAMIC 100000PF F 1608
C1531	1-131-992-11	s	CAP, CERAMIC 100000PF F 1608
C1532	1-131-992-11	s	CAP, CERAMIC 100000PF F 1608
C1700	1-131-992-11	s	CAP, CERAMIC 100000PF F 1608
C1701	1-131-992-11	s	CAP, CERAMIC 100000PF F 1608
C1702	1-131-992-11	s	CAP, CERAMIC 100000PF F 1608
C1703	1-131-992-11	s	CAP, CERAMIC 100000PF F 1608
C1704	1-131-992-11	s	CAP, CERAMIC 100000PF F 1608
C1705	1-131-992-11	s	CAP, CERAMIC 100000PF F 1608
C2100	1-131-992-11	s	CAP, CERAMIC 100000PF F 1608
C2101	1-131-992-11	s	CAP, CERAMIC 100000PF F 1608
C2102	1-131-992-11	s	CAP, CERAMIC 100000PF F 1608
C2103	1-131-992-11	s	CAP, CERAMIC 100000PF F 1608
C2104	1-131-992-11	s	CAP, CERAMIC 100000PF F 1608
C2105	1-131-992-11	s	CAP, CERAMIC 100000PF F 1608
C2106	1-131-992-11	s	CAP, CERAMIC 100000PF F 1608
C2107	1-131-992-11	s	CAP, CERAMIC 100000PF F 1608
C2108	1-131-992-11	s	CAP, CERAMIC 100000PF F 1608
C2109	1-131-992-11	s	CAP, CERAMIC 100000PF F 1608
C2110	1-131-992-11	s	CAP, CERAMIC 100000PF F 1608
C2111	1-131-992-11	s	CAP, CERAMIC 100000PF F 1608
C2112	1-131-992-11	s	CAP, CERAMIC 100000PF F 1608
C2113	1-131-992-11	s	CAP, CERAMIC 100000PF F 1608
C2114	1-131-992-11	s	CAP, CERAMIC 100000PF F 1608
C2115	1-131-992-11	s	CAP, CERAMIC 100000PF F 1608
C2306	1-131-992-11	s	CAP, CERAMIC 100000PF F 1608
C2307	1-131-992-11	s	CAP, CERAMIC 100000PF F 1608
C2308	1-131-992-11	s	CAP, CERAMIC 100000PF F 1608
C2309	1-131-992-11	s	CAP, CERAMIC 100000PF F 1608
C2310	1-126-394-11	s	CAPACITOR,ELECT 10MF/16V(CHIP)
C2311	1-126-400-11	s	CAPACITOR ELECT 22MF/35V(CHIP)

(SS-89 BOARD [SUFFIX 17-])

Ref. No. or Q'ty	Part No.	SP	Description
C2312	1-126-400-11	s	CAPACITOR ELECT 22MF/35V(CHIP)
C2313	1-131-992-11	s	CAP, CERAMIC 100000PF F 1608
C2314	1-126-394-11	s	CAPACITOR,ELECT 10MF/16V(CHIP)
C2315	1-126-396-11	s	CAPACITOR,ELECT 47MF/16V(CHIP)
C2316	1-131-992-11	s	CAP, CERAMIC 100000PF F 1608
C2317	1-127-971-11	s	CAPACITOR,FILM 0.01MF (3216)
C2318	1-162-966-11	s	CAPACITOR,CERAMIC 2200PF/50V B
C2320	1-127-971-11	s	CAPACITOR,FILM 0.01MF (3216)
C2321	1-162-923-11	s	CAPACITOR,CERAMIC 47PF/50V CH
C2322	1-131-992-11	s	CAP, CERAMIC 100000PF F 1608
C2323	1-131-992-11	s	CAP, CERAMIC 100000PF F 1608
C2324	1-131-992-11	s	CAP, CERAMIC 100000PF F 1608
C2325	1-131-992-11	s	CAP, CERAMIC 100000PF F 1608
C2326	1-162-915-11	s	CAPACITOR,CERAMIC 10PF/50V CH
C2327	1-131-992-11	s	CAP, CERAMIC 100000PF F 1608
C2328	1-100-159-91	s	CAP, CERAMIC 22MF B (SMD) 3216
C2329	1-100-159-91	s	CAP, CERAMIC 22MF B (SMD) 3216
C2330	1-100-159-91	s	CAP, CERAMIC 22MF B (SMD) 3216
C2331	1-100-159-91	s	CAP, CERAMIC 22MF B (SMD) 3216
C2332	1-131-992-11	s	CAP, CERAMIC 100000PF F 1608
C2333	1-131-992-11	s	CAP, CERAMIC 100000PF F 1608
C2334	1-131-992-11	s	CAP, CERAMIC 100000PF F 1608
C2335	1-131-992-11	s	CAP, CERAMIC 100000PF F 1608
C2336	1-131-992-11	s	CAP, CERAMIC 100000PF F 1608
C2337	1-131-992-11	s	CAP, CERAMIC 100000PF F 1608
C2338	1-126-400-11	s	CAPACITOR ELECT 22MF/35V(CHIP)
C2339	1-126-400-11	s	CAPACITOR ELECT 22MF/35V(CHIP)
CN100	1-774-391-11	o	CONNECTOR, BOARD TO BOARD 60P
CN101	1-580-057-91	s	PIN, CONNECTOR 4P
CN200	1-760-388-11	s	CONNECTOR PIN (SMD) 9 PIN
CN702	1-580-057-91	s	PIN, CONNECTOR 4P
CN1100	1-774-391-11	o	CONNECTOR, BOARD TO BOARD 60P
CN1102	1-569-775-11	s	PIN, CONNECTOR
D100	8-719-024-81	s	DIODE 1SS300-TE85L
D101	8-719-071-10	s	DIODE CL-191HR-CD-T
D102	8-719-064-52	s	DIODE CL-191YG-CD-T
D103	8-719-064-52	s	DIODE CL-191YG-CD-T
D106	8-719-820-41	s	DIODE 1SS302
D300	8-719-024-81	s	DIODE 1SS300-TE85L
D301	8-719-801-78	s	DIODE 1SS184
D302	8-719-024-81	s	DIODE 1SS300-TE85L
D303	8-719-801-78	s	DIODE 1SS184
D304	8-719-820-41	s	DIODE 1SS302
D305	8-719-024-81	s	DIODE 1SS300-TE85L
D306	8-719-801-78	s	DIODE 1SS184
D307	8-719-024-81	s	DIODE 1SS300-TE85L
D308	8-719-801-78	s	DIODE 1SS184
D309	8-719-024-81	s	DIODE 1SS300-TE85L
D310	8-719-801-78	s	DIODE 1SS184
D311	8-719-024-81	s	DIODE 1SS300-TE85L
D312	8-719-801-78	s	DIODE 1SS184
D313	8-719-024-81	s	DIODE 1SS300-TE85L
D314	8-719-801-78	s	DIODE 1SS184
D315	8-719-024-81	s	DIODE 1SS300-TE85L
D316	8-719-801-78	s	DIODE 1SS184
D317	8-719-024-81	s	DIODE 1SS300-TE85L
D500	8-719-024-81	s	DIODE 1SS300-TE85L
D700	8-719-801-78	s	DIODE 1SS184

(SS-89 BOARD [SUFFIX 17-])

Ref. No. or Q'ty	Part No.	SP	Description
D701	8-719-024-81	s	DIODE 1SS300-TE85L
D900	8-719-801-78	s	DIODE 1SS184
D901	8-719-801-78	s	DIODE 1SS184
D902	8-719-801-78	s	DIODE 1SS184
D1100	8-719-071-10	s	DIODE CL-191HR-CD-T
D1101	8-719-064-52	s	DIODE CL-191YG-CD-T
D1102	8-719-064-52	s	DIODE CL-191YG-CD-T
D1301	8-719-820-41	s	DIODE 1SS302
D1500	8-719-024-81	s	DIODE 1SS300-TE85L
D1501	8-719-064-52	s	DIODE CL-191YG-CD-T
D1502	8-719-064-52	s	DIODE CL-191YG-CD-T
D1503	8-719-064-52	s	DIODE CL-191YG-CD-T
D2300	8-719-024-81	s	DIODE 1SS300-TE85L
D2301	8-719-801-78	s	DIODE 1SS184
E300	1-535-877-22	s	CHIP,CHECKER (TEST POINT)
E500	1-535-877-22	s	CHIP,CHECKER (TEST POINT)
E700	1-535-877-22	s	CHIP,CHECKER (TEST POINT)
E1300	1-535-877-22	s	CHIP,CHECKER (TEST POINT)
E1500	1-535-877-22	s	CHIP,CHECKER (TEST POINT)
E2300	1-535-877-22	s	CHIP,CHECKER (TEST POINT)
F900	⚠ 1-576-212-21	s	FUSE CHIP 1.25A (6125)
F901	⚠ 1-576-212-21	s	FUSE CHIP 1.25A (6125)
F902	⚠ 1-576-212-21	s	FUSE CHIP 1.25A (6125)
F903	⚠ 1-576-212-21	s	FUSE CHIP 1.25A (6125)
IC104	8-759-524-10	s	IC TC74VHC157FT (EL)
IC105	8-759-523-94	s	IC TC74VHC32FT(EL)
IC106	8-759-523-81	s	IC TC74VHC08FT(EL)
IC107	8-759-681-67	s	IC MBM29LV160BE-90TN
IC108	8-759-196-97	s	IC TC7SH32FU (TE85R)
IC109	8-759-271-86	s	IC TC7SH04FU
IC111	8-759-524-50	s	IC TC74VHC541FT(EL)
IC112	8-759-549-01	s	IC SN74LV125APWR
IC117	6-705-983-01	s	IC IS42S32200B-6TL-TR
IC300	8-759-278-58	s	IC NJM4558V (TE2)
IC301	8-759-278-58	s	IC NJM4558V (TE2)
IC302	8-759-278-58	s	IC NJM4558V (TE2)
IC303	8-759-278-58	s	IC NJM4558V (TE2)
IC304	8-759-278-58	s	IC NJM4558V (TE2)
IC305	8-759-549-15	s	IC SN74LV245APWR
IC306	8-759-278-58	s	IC NJM4558V (TE2)
IC309	8-759-700-78	s	IC NJM082M
IC310	8-759-523-02	s	IC TC74HC4053AFT(EL)
IC312	8-759-549-01	s	IC SN74LV125APWR
IC313	8-759-549-01	s	IC SN74LV125APWR
IC500	8-759-685-33	s	IC BU2500FV-E2
IC502	8-759-278-58	s	IC NJM4558V (TE2)
IC503	8-759-278-58	s	IC NJM4558V (TE2)
IC504	8-759-278-58	s	IC NJM4558V (TE2)
IC505	8-759-442-54	s	IC RH5RL50AA-T1
IC506	8-759-278-58	s	IC NJM4558V (TE2)
IC508	8-759-278-58	s	IC NJM4558V (TE2)
IC509	8-759-338-95	s	IC NJM2903V (TE2)
IC510	8-759-338-95	s	IC NJM2903V (TE2)
IC511	8-759-338-95	s	IC NJM2903V (TE2)
IC512	8-759-549-15	s	IC SN74LV245APWR
IC513	8-759-337-40	s	IC NJM2904V(TE2)
IC514	8-759-338-95	s	IC NJM2903V (TE2)
IC515	8-759-337-40	s	IC NJM2904V(TE2)

(SS-89 BOARD [SUFFIX 17-])

Ref. No. or Q'ty	Part No.	SP	Description
IC516	8-759-338-95	s	IC NJM2903V (TE2)
IC517	8-759-833-99	s	IC MC74HC4052ADTR2
IC518	8-759-278-58	s	IC NJM4558V (TE2)
IC519	8-759-523-00	s	IC TC74HC4051AFT(EL)
IC520	8-759-549-01	s	IC SN74LV125APWR
IC521	8-759-491-50	s	IC TC74VHCT244AFT(EL)
IC700	8-759-491-50	s	IC TC74VHCT244AFT(EL)
IC701	8-759-422-21	s	IC NJM4580VTE2
IC702	8-759-523-02	s	IC TC74HC4053AFT(EL)
IC703	8-759-422-21	s	IC NJM4580VTE2
IC704	8-759-422-21	s	IC NJM4580VTE2
IC705	8-759-523-02	s	IC TC74HC4053AFT(EL)
IC706	8-759-700-78	s	IC NJM082M
IC707	8-759-422-21	s	IC NJM4580VTE2
IC708	8-759-422-21	s	IC NJM4580VTE2
IC709	8-759-422-21	s	IC NJM4580VTE2
IC710	8-759-422-21	s	IC NJM4580VTE2
IC711	8-759-523-02	s	IC TC74HC4053AFT(EL)
IC712	8-759-422-21	s	IC NJM4580VTE2
IC713	8-759-422-21	s	IC NJM4580VTE2
IC714	8-759-523-02	s	IC TC74HC4053AFT(EL)
IC715	8-759-523-02	s	IC TC74HC4053AFT(EL)
IC716	8-759-422-21	s	IC NJM4580VTE2
IC717	8-759-491-50	s	IC TC74VHCT244AFT(EL)
IC718	8-759-422-21	s	IC NJM4580VTE2
IC719	8-759-422-21	s	IC NJM4580VTE2
IC720	8-759-338-95	s	IC NJM2903V (TE2)
IC721	8-759-422-21	s	IC NJM4580VTE2
IC722	8-759-422-21	s	IC NJM4580VTE2
IC723	8-759-422-21	s	IC NJM4580VTE2
IC725	8-759-700-78	s	IC NJM082M
IC726	8-759-442-54	s	IC RH5RL50AA-T1
IC727	8-759-422-21	s	IC NJM4580VTE2
IC909	8-759-523-97	s	IC TC74VHC123AFT(EL)
IC910	8-759-338-95	s	IC NJM2903V (TE2)
IC911	8-759-182-84	s	IC PQ05SZ5U
IC912	8-759-523-94	s	IC TC74VHC32FT(EL)
IC913	6-704-156-01	s	IC S-80821CNUA-B8GT2G
IC914	6-704-156-01	s	IC S-80821CNUA-B8GT2G
IC915	6-704-156-01	s	IC S-80821CNUA-B8GT2G
IC1100	8-759-549-15	s	IC SN74LV245APWR
IC1102	8-759-524-10	s	IC TC74VHC157FT (EL)
IC1103	8-759-681-67	s	IC MBM29LV160BE-90TN
IC1107	8-759-491-46	s	IC TC74VHCT04AFT (EL)
IC1108	8-759-523-94	s	IC TC74VHC32FT(EL)
IC1109	8-759-523-81	s	IC TC74VHC08FT(EL)
IC1110	6-706-077-01	s	IC HY57V641620HGTP-P-DR
IC1111	6-706-077-01	s	IC HY57V641620HGTP-P-DR
IC1112	8-759-524-48	s	IC TC74VHC393FT (EL)
IC1300	8-759-549-15	s	IC SN74LV245APWR
IC1301	8-759-524-07	s	IC TC74VHC138FT(EL)
IC1302	8-759-523-92	s	IC TC74VHC21FT(EL)
IC1303	8-759-271-86	s	IC TC7SH04FU
IC1304	8-759-523-92	s	IC TC74VHC21FT(EL)
IC1305	8-759-523-94	s	IC TC74VHC32FT(EL)
IC1306	8-759-549-15	s	IC SN74LV245APWR
IC1307	8-759-549-15	s	IC SN74LV245APWR
IC1308	8-759-549-15	s	IC SN74LV245APWR
IC1309	8-759-549-15	s	IC SN74LV245APWR

(SS-89 BOARD [SUFFIX 17-])

Ref. No. or Q'ty	Part No.	SP	Description
IC1310	8-759-523-94	s	IC TC74VHC32FT(EL)
IC1311	8-759-710-28	s	IC NJM4565M-A
IC1312	8-759-549-15	s	IC SN74LV245APWR
IC1500	8-759-092-26	s	IC DS3691M
IC1501	8-759-092-26	s	IC DS3691M
IC1502	8-759-660-49	s	IC AM26LV32CNSR
IC1503	8-759-523-02	s	IC TC74HC4053AFT(EL)
IC1504	8-759-523-02	s	IC TC74HC4053AFT(EL)
IC1505	8-759-523-02	s	IC TC74HC4053AFT(EL)
IC1506	8-759-524-18	s	IC TC74VHC163FT(EL)
IC1507	8-759-660-50	s	IC SN75LV4737ADBR
IC1508	8-759-092-26	s	IC DS3691M
IC1509	8-759-523-78	s	IC TC74VHC00FT(EL)
IC1510	8-759-271-86	s	IC TC7SH04FU
IC1511	8-759-491-50	s	IC TC74VHCT244AFT(EL)
IC1512	8-759-429-23	s	IC TL16C550CPT
IC1513	8-759-578-68	s	IC SN74LVCC4245APWR
IC1514	8-759-392-01	s	IC TC7SH86FU (TE85R)
IC1515	8-759-491-47	s	IC TC74VHCT08FT (EL)
IC1700	8-759-523-94	s	IC TC74VHC32FT(EL)
IC1701	8-759-523-95	s	IC TC74VHC74FT(EL)
IC1703	8-759-523-81	s	IC TC74VHC08FT(EL)
IC1704	8-759-523-95	s	IC TC74VHC74FT(EL)
IC1705	8-759-523-94	s	IC TC74VHC32FT(EL)
IC1706	8-759-549-01	s	IC SN74LV125APWR
IC2100	8-759-549-15	s	IC SN74LV245APWR
IC2101	8-759-549-01	s	IC SN74LV125APWR
IC2102	8-759-549-15	s	IC SN74LV245APWR
IC2103	8-759-549-15	s	IC SN74LV245APWR
IC2104	8-759-549-15	s	IC SN74LV245APWR
IC2105	8-759-549-15	s	IC SN74LV245APWR
IC2106	8-759-549-15	s	IC SN74LV245APWR
IC2107	8-759-549-15	s	IC SN74LV245APWR
IC2108	8-759-549-15	s	IC SN74LV245APWR
IC2110	8-759-549-15	s	IC SN74LV245APWR
IC2111	8-759-549-15	s	IC SN74LV245APWR
IC2112	8-759-549-15	s	IC SN74LV245APWR
IC2113	8-759-549-01	s	IC SN74LV125APWR
IC2131	8-759-196-96	s	IC TC7SH08FU (TE85R)
IC2132	8-759-523-78	s	IC TC74VHC00FT(EL)
IC2134	8-759-548-97	s	IC SN74LV04APWR
IC2301	8-759-524-09	s	IC TC74VHC153FT (EL)
IC2302	8-759-524-09	s	IC TC74VHC153FT (EL)
IC2303	8-759-369-73	s	IC NJM4556AM
IC2304	8-759-700-78	s	IC NJM082M
IC2305	8-759-338-95	s	IC NJM2903V (TE2)
IC2306	8-759-523-84	s	IC TC74VHC14FT (EL)
IC2307	8-759-647-49	s	IC AL422B-TEL
IC2308	8-759-523-95	s	IC TC74VHC74FT(EL)
IC2309	8-759-196-97	s	IC TC7SH32FU (TE85R)
IC2310	6-704-723-01	s	IC XCS20XL-4VQG100C
L300	1-416-344-11	s	COIL, CHOKE 10UH
L301	1-416-344-11	s	COIL, CHOKE 10UH
L902	1-416-344-11	s	COIL, CHOKE 10UH
L904	1-416-344-11	s	COIL, CHOKE 10UH
L1300	1-416-344-11	s	COIL, CHOKE 10UH
L1301	1-416-344-11	s	COIL, CHOKE 10UH

(SS-89 BOARD [SUFFIX 17-])

Ref. No. or Q'ty	Part No.	SP	Description
Q100	8-729-928-81	s	TRANSISTOR DTC144EE
Q101	8-729-928-81	s	TRANSISTOR DTC144EE
Q102	8-729-928-81	s	TRANSISTOR DTC144EE
Q300	8-729-807-51	s	TRANSISTOR 2SD1623-S
Q303	8-729-230-27	s	TRANSISTOR 2SA1213Y-TE12L
Q500	8-729-807-51	s	TRANSISTOR 2SD1623-S
Q700	8-729-117-32	s	TRANSISTOR 2SC4177
Q701	8-729-117-32	s	TRANSISTOR 2SC4177
Q900	8-729-928-81	s	TRANSISTOR DTC144EE
Q901	8-729-928-81	s	TRANSISTOR DTC144EE
Q902	8-729-117-32	s	TRANSISTOR 2SC4177
Q903	8-729-140-63	s	TRANSISTOR 2SA1611-M5M6
Q1100	8-729-928-81	s	TRANSISTOR DTC144EE
Q1101	8-729-928-81	s	TRANSISTOR DTC144EE
Q1102	8-729-928-81	s	TRANSISTOR DTC144EE
Q1500	8-729-928-81	s	TRANSISTOR DTC144EE
Q1501	8-729-928-81	s	TRANSISTOR DTC144EE
Q1502	8-729-928-81	s	TRANSISTOR DTC144EE
Q2300	8-729-821-88	s	TRANSISTOR 2SK1332-3
Q2301	8-729-821-88	s	TRANSISTOR 2SK1332-3
Q2302	8-729-928-27	s	TRANSISTOR DTA144EE
Q2303	8-729-928-27	s	TRANSISTOR DTA144EE
R100	1-218-863-11	s	RESISTOR,CHIP 4.7K 1/10W(1608)
R101	1-218-887-11	s	RESISTOR,CHIP 47K 1/10W (1608)
R102	1-218-887-11	s	RESISTOR,CHIP 47K 1/10W (1608)
R103	1-218-863-11	s	RESISTOR,CHIP 4.7K 1/10W(1608)
R104	1-211-977-11	s	RESISTOR,CHIP 22 1/10W (1608)
R105	1-211-977-11	s	RESISTOR,CHIP 22 1/10W (1608)
R106	1-216-864-11	s	CONDUCTOR, CHIP (1608)
R107	1-218-887-11	s	RESISTOR,CHIP 47K 1/10W (1608)
R108	1-218-887-11	s	RESISTOR,CHIP 47K 1/10W (1608)
R109	1-218-887-11	s	RESISTOR,CHIP 47K 1/10W (1608)
R110	1-218-887-11	s	RESISTOR,CHIP 47K 1/10W (1608)
R112	1-216-864-11	s	CONDUCTOR, CHIP (1608)
R113	1-216-864-11	s	CONDUCTOR, CHIP (1608)
R114	1-211-977-11	s	RESISTOR,CHIP 22 1/10W (1608)
R115	1-211-977-11	s	RESISTOR,CHIP 22 1/10W (1608)
R124	1-218-871-11	s	RESISTOR,CHIP 10K 1/10W (1608)
R125	1-218-871-11	s	RESISTOR,CHIP 10K 1/10W (1608)
R126	1-218-887-11	s	RESISTOR,CHIP 47K 1/10W (1608)
R127	1-218-887-11	s	RESISTOR,CHIP 47K 1/10W (1608)
R128	1-218-895-11	s	RESISTOR,CHIP 100K 1/10W(1608)
R139	1-218-847-11	s	RESISTOR, CHIP 1K 1/10W (1608)
R140	1-218-887-11	s	RESISTOR,CHIP 47K 1/10W (1608)
R141	1-218-887-11	s	RESISTOR,CHIP 47K 1/10W (1608)
R142	1-218-887-11	s	RESISTOR,CHIP 47K 1/10W (1608)
R143	1-211-977-11	s	RESISTOR,CHIP 22 1/10W (1608)
R144	1-218-895-11	s	RESISTOR,CHIP 100K 1/10W(1608)
R300	1-218-887-11	s	RESISTOR,CHIP 47K 1/10W (1608)
R301	1-218-879-11	s	RESISTOR,CHIP 22K 1/10W (1608)
R302	1-216-857-11	s	RESISTOR,CHIP 1M 1/10W(1608)
R303	1-218-849-11	s	RESISTOR,CHIP 1.2K 1/10W(1608)
R304	1-216-857-11	s	RESISTOR,CHIP 1M 1/10W(1608)
R305	1-218-849-11	s	RESISTOR,CHIP 1.2K 1/10W(1608)
R306	1-218-849-11	s	RESISTOR,CHIP 1.2K 1/10W(1608)
R307	1-218-863-11	s	RESISTOR,CHIP 4.7K 1/10W(1608)
R308	1-218-871-11	s	RESISTOR,CHIP 10K 1/10W (1608)
R309	1-218-823-11	s	RESISTOR,CHIP 100 1/10W (1608)

(SS-89 BOARD [SUFFIX 17-])

Ref. No. or Q'ty	Part No.	SP	Description
R310	1-218-871-11	s	RESISTOR,CHIP 10K 1/10W (1608)
R311	1-218-871-11	s	RESISTOR,CHIP 10K 1/10W (1608)
R312	1-218-863-11	s	RESISTOR,CHIP 4.7K 1/10W(1608)
R313	1-218-863-11	s	RESISTOR,CHIP 4.7K 1/10W(1608)
R314	1-218-863-11	s	RESISTOR,CHIP 4.7K 1/10W(1608)
R315	1-218-863-11	s	RESISTOR,CHIP 4.7K 1/10W(1608)
R316	1-218-863-11	s	RESISTOR,CHIP 4.7K 1/10W(1608)
R317	1-218-863-11	s	RESISTOR,CHIP 4.7K 1/10W(1608)
R318	1-218-823-11	s	RESISTOR,CHIP 100 1/10W (1608)
R319	1-218-823-11	s	RESISTOR,CHIP 100 1/10W (1608)
R320	1-218-887-11	s	RESISTOR,CHIP 47K 1/10W (1608)
R321	1-218-887-11	s	RESISTOR,CHIP 47K 1/10W (1608)
R322	1-218-887-11	s	RESISTOR,CHIP 47K 1/10W (1608)
R323	1-218-823-11	s	RESISTOR,CHIP 100 1/10W (1608)
R324	1-218-855-11	s	RESISTOR,CHIP 2.2K 1/10W(1608)
R325	1-218-879-11	s	RESISTOR,CHIP 22K 1/10W (1608)
R326	1-218-855-11	s	RESISTOR,CHIP 2.2K 1/10W(1608)
R327	1-218-871-11	s	RESISTOR,CHIP 10K 1/10W (1608)
R328	1-218-871-11	s	RESISTOR,CHIP 10K 1/10W (1608)
R329	1-218-871-11	s	RESISTOR,CHIP 10K 1/10W (1608)
R330	1-218-879-11	s	RESISTOR,CHIP 22K 1/10W (1608)
R331	1-218-871-11	s	RESISTOR,CHIP 10K 1/10W (1608)
R332	1-218-871-11	s	RESISTOR,CHIP 10K 1/10W (1608)
R333	1-218-871-11	s	RESISTOR,CHIP 10K 1/10W (1608)
R334	1-218-871-11	s	RESISTOR,CHIP 10K 1/10W (1608)
R335	1-218-871-11	s	RESISTOR,CHIP 10K 1/10W (1608)
R336	1-218-871-11	s	RESISTOR,CHIP 10K 1/10W (1608)
R337	1-218-871-11	s	RESISTOR,CHIP 10K 1/10W (1608)
R338	1-218-871-11	s	RESISTOR,CHIP 10K 1/10W (1608)
R339	1-216-864-11	s	CONDUCTOR, CHIP (1608)
R340	1-218-871-11	s	RESISTOR,CHIP 10K 1/10W (1608)
R341	1-218-871-11	s	RESISTOR,CHIP 10K 1/10W (1608)
R342	1-218-871-11	s	RESISTOR,CHIP 10K 1/10W (1608)
R343	1-218-823-11	s	RESISTOR,CHIP 100 1/10W (1608)
R344	1-218-823-11	s	RESISTOR,CHIP 100 1/10W (1608)
R345	1-218-871-11	s	RESISTOR,CHIP 10K 1/10W (1608)
R346	1-211-981-11	s	RESISTOR,CHIP 33 1/10W (1608)
R347	1-211-981-11	s	RESISTOR,CHIP 33 1/10W (1608)
R348	1-211-981-11	s	RESISTOR,CHIP 33 1/10W (1608)
R349	1-211-981-11	s	RESISTOR,CHIP 33 1/10W (1608)
R501	1-218-883-11	s	RESISTOR,CHIP 33K 1/10W (1608)
R502	1-218-879-11	s	RESISTOR,CHIP 22K 1/10W (1608)
R503	1-218-879-11	s	RESISTOR,CHIP 22K 1/10W (1608)
R504	1-218-879-11	s	RESISTOR,CHIP 22K 1/10W (1608)
R505	1-218-887-11	s	RESISTOR,CHIP 47K 1/10W (1608)
R506	1-218-887-11	s	RESISTOR,CHIP 47K 1/10W (1608)
R507	1-218-895-11	s	RESISTOR,CHIP 100K 1/10W(1608)
R508	1-218-895-11	s	RESISTOR,CHIP 100K 1/10W(1608)
R509	1-218-887-11	s	RESISTOR,CHIP 47K 1/10W (1608)
R510	1-218-887-11	s	RESISTOR,CHIP 47K 1/10W (1608)
R511	1-218-887-11	s	RESISTOR,CHIP 47K 1/10W (1608)
R512	1-218-887-11	s	RESISTOR,CHIP 47K 1/10W (1608)
R513	1-218-883-11	s	RESISTOR,CHIP 33K 1/10W (1608)
R514	1-218-879-11	s	RESISTOR,CHIP 22K 1/10W (1608)
R515	1-218-879-11	s	RESISTOR,CHIP 22K 1/10W (1608)
R516	1-218-823-11	s	RESISTOR,CHIP 100 1/10W (1608)
R517	1-218-891-11	s	RESISTOR,CHIP 68K 1/10W (1608)
R518	1-218-891-11	s	RESISTOR,CHIP 68K 1/10W (1608)
R519	1-218-895-11	s	RESISTOR,CHIP 100K 1/10W(1608)

(SS-89 BOARD [SUFFIX 17-])

Ref. No. or Q'ty	Part No.	SP	Description
R520	1-218-891-11	s	RESISTOR,CHIP 68K 1/10W (1608)
R521	1-218-895-11	s	RESISTOR,CHIP 100K 1/10W(1608)
R522	1-216-864-11	s	CONDUCTOR, CHIP (1608)
R523	1-216-864-11	s	CONDUCTOR, CHIP (1608)
R524	1-216-864-11	s	CONDUCTOR, CHIP (1608)
R525	1-218-873-11	s	RESISTOR,CHIP 12K 1/10W (1608)
R526	1-218-873-11	s	RESISTOR,CHIP 12K 1/10W (1608)
R527	1-218-873-11	s	RESISTOR,CHIP 12K 1/10W (1608)
R528	1-218-871-11	s	RESISTOR,CHIP 10K 1/10W (1608)
R529	1-218-871-11	s	RESISTOR,CHIP 10K 1/10W (1608)
R530	1-218-871-11	s	RESISTOR,CHIP 10K 1/10W (1608)
R531	1-218-879-11	s	RESISTOR,CHIP 22K 1/10W (1608)
R532	1-218-879-11	s	RESISTOR,CHIP 22K 1/10W (1608)
R533	1-218-879-11	s	RESISTOR,CHIP 22K 1/10W (1608)
R534	1-218-891-11	s	RESISTOR,CHIP 68K 1/10W (1608)
R535	1-218-891-11	s	RESISTOR,CHIP 68K 1/10W (1608)
R536	1-218-879-11	s	RESISTOR,CHIP 22K 1/10W (1608)
R537	1-218-879-11	s	RESISTOR,CHIP 22K 1/10W (1608)
R538	1-218-879-11	s	RESISTOR,CHIP 22K 1/10W (1608)
R539	1-218-879-11	s	RESISTOR,CHIP 22K 1/10W (1608)
R540	1-218-891-11	s	RESISTOR,CHIP 68K 1/10W (1608)
R541	1-218-891-11	s	RESISTOR,CHIP 68K 1/10W (1608)
R542	1-218-891-11	s	RESISTOR,CHIP 68K 1/10W (1608)
R543	1-218-891-11	s	RESISTOR,CHIP 68K 1/10W (1608)
R544	1-218-887-11	s	RESISTOR,CHIP 47K 1/10W (1608)
R545	1-218-887-11	s	RESISTOR,CHIP 47K 1/10W (1608)
R546	1-218-871-11	s	RESISTOR,CHIP 10K 1/10W (1608)
R547	1-218-871-11	s	RESISTOR,CHIP 10K 1/10W (1608)
R548	1-218-851-11	s	RESISTOR,CHIP 1.5K 1/10W(1608)
R549	1-218-851-11	s	RESISTOR,CHIP 1.5K 1/10W(1608)
R550	1-218-871-11	s	RESISTOR,CHIP 10K 1/10W (1608)
R551	1-218-871-11	s	RESISTOR,CHIP 10K 1/10W (1608)
R552	1-218-871-11	s	RESISTOR,CHIP 10K 1/10W (1608)
R553	1-218-871-11	s	RESISTOR,CHIP 10K 1/10W (1608)
R554	1-218-871-11	s	RESISTOR,CHIP 10K 1/10W (1608)
R555	1-218-915-11	s	RESISTOR,CHIP 680K 1/10W(1608)
R556	1-218-871-11	s	RESISTOR,CHIP 10K 1/10W (1608)
R557	1-218-915-11	s	RESISTOR,CHIP 680K 1/10W(1608)
R558	1-218-877-11	s	RESISTOR,CHIP 18K 1/10W (1608)
R559	1-218-877-11	s	RESISTOR,CHIP 18K 1/10W (1608)
R562	1-218-871-11	s	RESISTOR,CHIP 10K 1/10W (1608)
R563	1-218-871-11	s	RESISTOR,CHIP 10K 1/10W (1608)
R564	1-218-871-11	s	RESISTOR,CHIP 10K 1/10W (1608)
R567	1-218-907-11	s	RESISTOR,CHIP 330K 1/10W(1608)
R568	1-218-907-11	s	RESISTOR,CHIP 330K 1/10W(1608)
R569	1-218-907-11	s	RESISTOR,CHIP 330K 1/10W(1608)
R570	1-218-907-11	s	RESISTOR,CHIP 330K 1/10W(1608)
R571	1-218-855-11	s	RESISTOR,CHIP 2.2K 1/10W(1608)
R572	1-218-855-11	s	RESISTOR,CHIP 2.2K 1/10W(1608)
R573	1-218-855-11	s	RESISTOR,CHIP 2.2K 1/10W(1608)
R574	1-218-855-11	s	RESISTOR,CHIP 2.2K 1/10W(1608)
R575	1-218-855-11	s	RESISTOR,CHIP 2.2K 1/10W(1608)
R576	1-218-855-11	s	RESISTOR,CHIP 2.2K 1/10W(1608)
R577	1-218-871-11	s	RESISTOR,CHIP 10K 1/10W (1608)
R578	1-218-871-11	s	RESISTOR,CHIP 10K 1/10W (1608)
R579	1-218-871-11	s	RESISTOR,CHIP 10K 1/10W (1608)
R580	1-218-871-11	s	RESISTOR,CHIP 10K 1/10W (1608)
R581	1-218-891-11	s	RESISTOR,CHIP 68K 1/10W (1608)
R582	1-218-879-11	s	RESISTOR,CHIP 22K 1/10W (1608)

(SS-89 BOARD [SUFFIX 17-])

Ref. No. or Q'ty	Part No.	SP	Description
R583	1-218-891-11	s	RESISTOR,CHIP 68K 1/10W (1608)
R584	1-218-879-11	s	RESISTOR,CHIP 22K 1/10W (1608)
R585	1-218-891-11	s	RESISTOR,CHIP 68K 1/10W (1608)
R586	1-218-891-11	s	RESISTOR,CHIP 68K 1/10W (1608)
R587	1-218-891-11	s	RESISTOR,CHIP 68K 1/10W (1608)
R588	1-218-891-11	s	RESISTOR,CHIP 68K 1/10W (1608)
R589	1-218-891-11	s	RESISTOR,CHIP 68K 1/10W (1608)
R590	1-218-891-11	s	RESISTOR,CHIP 68K 1/10W (1608)
R591	1-218-891-11	s	RESISTOR,CHIP 68K 1/10W (1608)
R592	1-218-891-11	s	RESISTOR,CHIP 68K 1/10W (1608)
R593	1-218-891-11	s	RESISTOR,CHIP 68K 1/10W (1608)
R594	1-218-891-11	s	RESISTOR,CHIP 68K 1/10W (1608)
R595	1-218-879-11	s	RESISTOR,CHIP 22K 1/10W (1608)
R596	1-218-879-11	s	RESISTOR,CHIP 22K 1/10W (1608)
R597	1-216-864-11	s	CONDUCTOR, CHIP (1608)
R598	1-218-887-11	s	RESISTOR,CHIP 47K 1/10W (1608)
R599	1-218-887-11	s	RESISTOR,CHIP 47K 1/10W (1608)
R600	1-218-871-11	s	RESISTOR,CHIP 10K 1/10W (1608)
R601	1-218-887-11	s	RESISTOR,CHIP 47K 1/10W (1608)
R602	1-218-887-11	s	RESISTOR,CHIP 47K 1/10W (1608)
R603	1-218-877-11	s	RESISTOR,CHIP 18K 1/10W (1608)
R604	1-218-877-11	s	RESISTOR,CHIP 18K 1/10W (1608)
R605	1-218-877-11	s	RESISTOR,CHIP 18K 1/10W (1608)
R606	1-218-877-11	s	RESISTOR,CHIP 18K 1/10W (1608)
R607	1-218-855-11	s	RESISTOR,CHIP 2.2K 1/10W(1608)
R608	1-218-853-11	s	RESISTOR,CHIP 1.8K 1/10W(1608)
R609	1-218-853-11	s	RESISTOR,CHIP 1.8K 1/10W(1608)
R610	1-218-907-11	s	RESISTOR,CHIP 330K 1/10W(1608)
R611	1-218-907-11	s	RESISTOR,CHIP 330K 1/10W(1608)
R612	1-218-853-11	s	RESISTOR,CHIP 1.8K 1/10W(1608)
R613	1-218-907-11	s	RESISTOR,CHIP 330K 1/10W(1608)
R614	1-218-907-11	s	RESISTOR,CHIP 330K 1/10W(1608)
R615	1-218-855-11	s	RESISTOR,CHIP 2.2K 1/10W(1608)
R616	1-218-855-11	s	RESISTOR,CHIP 2.2K 1/10W(1608)
R617	1-218-855-11	s	RESISTOR,CHIP 2.2K 1/10W(1608)
R618	1-218-855-11	s	RESISTOR,CHIP 2.2K 1/10W(1608)
R619	1-218-853-11	s	RESISTOR,CHIP 1.8K 1/10W(1608)
R620	1-218-853-11	s	RESISTOR,CHIP 1.8K 1/10W(1608)
R621	1-218-853-11	s	RESISTOR,CHIP 1.8K 1/10W(1608)
R622	1-218-853-11	s	RESISTOR,CHIP 1.8K 1/10W(1608)
R623	1-218-869-11	s	RESISTOR,CHIP 8.2K 1/10W(1608)
R624	1-218-871-11	s	RESISTOR,CHIP 10K 1/10W (1608)
R625	1-218-871-11	s	RESISTOR,CHIP 10K 1/10W (1608)
R626	1-218-891-11	s	RESISTOR,CHIP 68K 1/10W (1608)
R627	1-218-891-11	s	RESISTOR,CHIP 68K 1/10W (1608)
R628	1-218-891-11	s	RESISTOR,CHIP 68K 1/10W (1608)
R629	1-218-879-11	s	RESISTOR,CHIP 22K 1/10W (1608)
R630	1-218-847-11	s	RESISTOR, CHIP 1K 1/10W (1608)
R631	1-216-864-11	s	CONDUCTOR, CHIP (1608)
R633	1-216-864-11	s	CONDUCTOR, CHIP (1608)
R700	1-218-887-11	s	RESISTOR,CHIP 47K 1/10W (1608)
R701	1-218-887-11	s	RESISTOR,CHIP 47K 1/10W (1608)
R702	1-218-887-11	s	RESISTOR,CHIP 47K 1/10W (1608)
R703	1-218-887-11	s	RESISTOR,CHIP 47K 1/10W (1608)
R704	1-218-887-11	s	RESISTOR,CHIP 47K 1/10W (1608)
R705	1-218-883-11	s	RESISTOR,CHIP 33K 1/10W (1608)
R706	1-218-883-11	s	RESISTOR,CHIP 33K 1/10W (1608)
R707	1-218-887-11	s	RESISTOR,CHIP 47K 1/10W (1608)
R708	1-218-895-11	s	RESISTOR,CHIP 100K 1/10W(1608)

(SS-89 BOARD [SUFFIX 17-])

Ref. No. or Q'ty	Part No.	SP	Description
R709	1-218-895-11	s	RESISTOR,CHIP 100K 1/10W(1608)
R710	1-218-889-11	s	RESISTOR,CHIP 56K 1/10W(1608)
R711	1-218-883-11	s	RESISTOR,CHIP 33K 1/10W (1608)
R712	1-218-883-11	s	RESISTOR,CHIP 33K 1/10W (1608)
R713	1-218-883-11	s	RESISTOR,CHIP 33K 1/10W (1608)
R714	1-218-883-11	s	RESISTOR,CHIP 33K 1/10W (1608)
R715	1-218-861-11	s	RESISTOR,CHIP 3.9K 1/10W(1608)
R716	1-218-861-11	s	RESISTOR,CHIP 3.9K 1/10W(1608)
R717	1-218-891-11	s	RESISTOR,CHIP 68K 1/10W (1608)
R718	1-218-891-11	s	RESISTOR,CHIP 68K 1/10W (1608)
R719	1-218-891-11	s	RESISTOR,CHIP 68K 1/10W (1608)
R720	1-218-891-11	s	RESISTOR,CHIP 68K 1/10W (1608)
R721	1-218-871-11	s	RESISTOR,CHIP 10K 1/10W (1608)
R722	1-218-871-11	s	RESISTOR,CHIP 10K 1/10W (1608)
R723	1-218-879-11	s	RESISTOR,CHIP 22K 1/10W (1608)
R724	1-218-879-11	s	RESISTOR,CHIP 22K 1/10W (1608)
R725	1-218-859-11	s	RESISTOR,CHIP 3.3K 1/10W(1608)
R726	1-218-859-11	s	RESISTOR,CHIP 3.3K 1/10W(1608)
R727	1-218-879-11	s	RESISTOR,CHIP 22K 1/10W (1608)
R728	1-218-879-11	s	RESISTOR,CHIP 22K 1/10W (1608)
R729	1-218-883-11	s	RESISTOR,CHIP 33K 1/10W (1608)
R730	1-218-883-11	s	RESISTOR,CHIP 33K 1/10W (1608)
R731	1-218-883-11	s	RESISTOR,CHIP 33K 1/10W (1608)
R732	1-218-883-11	s	RESISTOR,CHIP 33K 1/10W (1608)
R733	1-218-883-11	s	RESISTOR,CHIP 33K 1/10W (1608)
R734	1-218-883-11	s	RESISTOR,CHIP 33K 1/10W (1608)
R735	1-218-875-11	s	RESISTOR,CHIP 15K 1/10W (1608)
R736	1-218-875-11	s	RESISTOR,CHIP 15K 1/10W (1608)
R737	1-218-883-11	s	RESISTOR,CHIP 33K 1/10W (1608)
R738	1-218-883-11	s	RESISTOR,CHIP 33K 1/10W (1608)
R739	1-218-881-11	s	RESISTOR, CHIP 27K 1/10W(1608)
R740	1-218-881-11	s	RESISTOR, CHIP 27K 1/10W(1608)
R741	1-218-871-11	s	RESISTOR,CHIP 10K 1/10W (1608)
R742	1-218-871-11	s	RESISTOR,CHIP 10K 1/10W (1608)
R743	1-218-847-11	s	RESISTOR, CHIP 1K 1/10W (1608)
R744	1-218-887-11	s	RESISTOR,CHIP 47K 1/10W (1608)
R745	1-218-887-11	s	RESISTOR,CHIP 47K 1/10W (1608)
R746	1-218-887-11	s	RESISTOR,CHIP 47K 1/10W (1608)
R747	1-218-907-11	s	RESISTOR,CHIP 330K 1/10W(1608)
R748	1-218-907-11	s	RESISTOR,CHIP 330K 1/10W(1608)
R749	1-218-899-11	s	RESISTOR,CHIP 150K 1/10W(1608)
R750	1-218-899-11	s	RESISTOR,CHIP 150K 1/10W(1608)
R751	1-218-859-11	s	RESISTOR,CHIP 3.3K 1/10W(1608)
R752	1-218-887-11	s	RESISTOR,CHIP 47K 1/10W (1608)
R753	1-218-873-11	s	RESISTOR,CHIP 12K 1/10W (1608)
R754	1-218-883-11	s	RESISTOR,CHIP 33K 1/10W (1608)
R755	1-218-887-11	s	RESISTOR,CHIP 47K 1/10W (1608)
R756	1-218-887-11	s	RESISTOR,CHIP 47K 1/10W (1608)
R757	1-218-847-11	s	RESISTOR, CHIP 1K 1/10W (1608)
R758	1-218-887-11	s	RESISTOR,CHIP 47K 1/10W (1608)
R759	1-218-887-11	s	RESISTOR,CHIP 47K 1/10W (1608)
R760	1-218-895-11	s	RESISTOR,CHIP 100K 1/10W(1608)
R761	1-218-895-11	s	RESISTOR,CHIP 100K 1/10W(1608)
R762	1-218-895-11	s	RESISTOR,CHIP 100K 1/10W(1608)
R763	1-218-895-11	s	RESISTOR,CHIP 100K 1/10W(1608)
R764	1-218-847-11	s	RESISTOR, CHIP 1K 1/10W (1608)
R765	1-218-871-11	s	RESISTOR,CHIP 10K 1/10W (1608)
R766	1-218-871-11	s	RESISTOR,CHIP 10K 1/10W (1608)
R767	1-218-871-11	s	RESISTOR,CHIP 10K 1/10W (1608)

(SS-89 BOARD [SUFFIX 17-])

Ref. No. or Q'ty	Part No.	SP	Description
R768	1-218-871-11	s	RESISTOR,CHIP 10K 1/10W (1608)
R769	1-218-881-11	s	RESISTOR, CHIP 27K 1/10W(1608)
R770	1-218-881-11	s	RESISTOR, CHIP 27K 1/10W(1608)
R771	1-218-895-11	s	RESISTOR,CHIP 100K 1/10W(1608)
R772	1-218-869-11	s	RESISTOR,CHIP 8.2K 1/10W(1608)
R773	1-218-895-11	s	RESISTOR,CHIP 100K 1/10W(1608)
R774	1-218-869-11	s	RESISTOR,CHIP 8.2K 1/10W(1608)
R775	1-218-887-11	s	RESISTOR,CHIP 47K 1/10W (1608)
R776	1-218-887-11	s	RESISTOR,CHIP 47K 1/10W (1608)
R777	1-218-879-11	s	RESISTOR,CHIP 22K 1/10W (1608)
R778	1-218-879-11	s	RESISTOR,CHIP 22K 1/10W (1608)
R779	1-218-887-11	s	RESISTOR,CHIP 47K 1/10W (1608)
R780	1-218-887-11	s	RESISTOR,CHIP 47K 1/10W (1608)
R781	1-218-847-11	s	RESISTOR, CHIP 1K 1/10W (1608)
R782	1-218-887-11	s	RESISTOR,CHIP 47K 1/10W (1608)
R783	1-218-847-11	s	RESISTOR, CHIP 1K 1/10W (1608)
R784	1-218-887-11	s	RESISTOR,CHIP 47K 1/10W (1608)
R785	1-218-887-11	s	RESISTOR,CHIP 47K 1/10W (1608)
R786	1-218-887-11	s	RESISTOR,CHIP 47K 1/10W (1608)
R787	1-218-847-11	s	RESISTOR, CHIP 1K 1/10W (1608)
R788	1-218-881-11	s	RESISTOR, CHIP 27K 1/10W(1608)
R789	1-218-881-11	s	RESISTOR, CHIP 27K 1/10W(1608)
R790	1-218-879-11	s	RESISTOR,CHIP 22K 1/10W (1608)
R791	1-218-871-11	s	RESISTOR,CHIP 10K 1/10W (1608)
R792	1-218-887-11	s	RESISTOR,CHIP 47K 1/10W (1608)
R793	1-218-887-11	s	RESISTOR,CHIP 47K 1/10W (1608)
R794	1-218-887-11	s	RESISTOR,CHIP 47K 1/10W (1608)
R795	1-218-887-11	s	RESISTOR,CHIP 47K 1/10W (1608)
R796	1-218-879-11	s	RESISTOR,CHIP 22K 1/10W (1608)
R797	1-218-871-11	s	RESISTOR,CHIP 10K 1/10W (1608)
R798	1-218-887-11	s	RESISTOR,CHIP 47K 1/10W (1608)
R799	1-218-881-11	s	RESISTOR, CHIP 27K 1/10W(1608)
R800	1-218-887-11	s	RESISTOR,CHIP 47K 1/10W (1608)
R801	1-218-887-11	s	RESISTOR,CHIP 47K 1/10W (1608)
R802	1-218-869-11	s	RESISTOR,CHIP 8.2K 1/10W(1608)
R803	1-218-869-11	s	RESISTOR,CHIP 8.2K 1/10W(1608)
R804	1-218-871-11	s	RESISTOR,CHIP 10K 1/10W (1608)
R805	1-218-871-11	s	RESISTOR,CHIP 10K 1/10W (1608)
R806	1-218-857-11	s	RESISTOR,CHIP 2.7K 1/10W(1608)
R807	1-218-857-11	s	RESISTOR,CHIP 2.7K 1/10W(1608)
R808	1-218-903-11	s	RESISTOR,CHIP 220K 1/10W(1608)
R809	1-218-903-11	s	RESISTOR,CHIP 220K 1/10W(1608)
R810	1-218-857-11	s	RESISTOR,CHIP 2.7K 1/10W(1608)
R811	1-218-903-11	s	RESISTOR,CHIP 220K 1/10W(1608)
R812	1-218-857-11	s	RESISTOR,CHIP 2.7K 1/10W(1608)
R813	1-218-903-11	s	RESISTOR,CHIP 220K 1/10W(1608)
R814	1-218-869-11	s	RESISTOR,CHIP 8.2K 1/10W(1608)
R815	1-218-869-11	s	RESISTOR,CHIP 8.2K 1/10W(1608)
R816	1-218-871-11	s	RESISTOR,CHIP 10K 1/10W (1608)
R817	1-218-871-11	s	RESISTOR,CHIP 10K 1/10W (1608)
R818	1-218-847-11	s	RESISTOR, CHIP 1K 1/10W (1608)
R819	1-218-847-11	s	RESISTOR, CHIP 1K 1/10W (1608)
R820	1-218-903-11	s	RESISTOR,CHIP 220K 1/10W(1608)
R821	1-218-903-11	s	RESISTOR,CHIP 220K 1/10W(1608)
R822	1-218-903-11	s	RESISTOR,CHIP 220K 1/10W(1608)
R823	1-218-903-11	s	RESISTOR,CHIP 220K 1/10W(1608)
R824	1-218-903-11	s	RESISTOR,CHIP 220K 1/10W(1608)
R825	1-218-903-11	s	RESISTOR,CHIP 220K 1/10W(1608)
R826	1-218-859-11	s	RESISTOR,CHIP 3.3K 1/10W(1608)

(SS-89 BOARD [SUFFIX 17-])

Ref. No. or Q'ty	Part No.	SP	Description
R827	1-218-887-11	s	RESISTOR,CHIP 47K 1/10W (1608)
R828	1-218-903-11	s	RESISTOR,CHIP 220K 1/10W(1608)
R829	1-218-903-11	s	RESISTOR,CHIP 220K 1/10W(1608)
R830	1-218-863-11	s	RESISTOR,CHIP 4.7K 1/10W(1608)
R831	1-218-863-11	s	RESISTOR,CHIP 4.7K 1/10W(1608)
R834	1-218-847-11	s	RESISTOR, CHIP 1K 1/10W (1608)
R835	1-218-881-11	s	RESISTOR, CHIP 27K 1/10W(1608)
R900	1-218-873-11	s	RESISTOR,CHIP 12K 1/10W (1608)
R901	1-218-871-11	s	RESISTOR,CHIP 10K 1/10W (1608)
R902	1-218-847-11	s	RESISTOR, CHIP 1K 1/10W (1608)
R903	1-218-873-11	s	RESISTOR,CHIP 12K 1/10W (1608)
R904	1-218-871-11	s	RESISTOR,CHIP 10K 1/10W (1608)
R905	1-218-873-11	s	RESISTOR,CHIP 12K 1/10W (1608)
R906	1-218-871-11	s	RESISTOR,CHIP 10K 1/10W (1608)
R907	1-218-885-11	s	RESISTOR,CHIP 39K 1/10W (1608)
R908	1-218-887-11	s	RESISTOR,CHIP 47K 1/10W (1608)
R909	1-218-887-11	s	RESISTOR,CHIP 47K 1/10W (1608)
R910	1-218-887-11	s	RESISTOR,CHIP 47K 1/10W (1608)
R911	1-218-887-11	s	RESISTOR,CHIP 47K 1/10W (1608)
R912	1-218-887-11	s	RESISTOR,CHIP 47K 1/10W (1608)
R913	1-218-895-11	s	RESISTOR,CHIP 100K 1/10W(1608)
R914	1-218-895-11	s	RESISTOR,CHIP 100K 1/10W(1608)
R915	1-218-895-11	s	RESISTOR,CHIP 100K 1/10W(1608)
R916	1-218-895-11	s	RESISTOR,CHIP 100K 1/10W(1608)
R917	1-218-879-11	s	RESISTOR,CHIP 22K 1/10W (1608)
R918	1-218-879-11	s	RESISTOR,CHIP 22K 1/10W (1608)
R919	1-218-887-11	s	RESISTOR,CHIP 47K 1/10W (1608)
R920	1-218-887-11	s	RESISTOR,CHIP 47K 1/10W (1608)
R921	1-218-879-11	s	RESISTOR,CHIP 22K 1/10W (1608)
R922	1-218-875-11	s	RESISTOR,CHIP 15K 1/10W (1608)
R923	1-218-885-11	s	RESISTOR,CHIP 39K 1/10W (1608)
R924	1-218-885-11	s	RESISTOR,CHIP 39K 1/10W (1608)
R925	1-218-885-11	s	RESISTOR,CHIP 39K 1/10W (1608)
R926	1-218-873-11	s	RESISTOR,CHIP 12K 1/10W (1608)
R927	1-218-907-11	s	RESISTOR,CHIP 330K 1/10W(1608)
R928	1-218-879-11	s	RESISTOR,CHIP 22K 1/10W (1608)
R1100	1-211-977-11	s	RESISTOR,CHIP 22 1/10W (1608)
R1101	1-211-977-11	s	RESISTOR,CHIP 22 1/10W (1608)
R1102	1-216-864-11	s	CONDUCTOR, CHIP (1608)
R1103	1-216-864-11	s	CONDUCTOR, CHIP (1608)
R1104	1-216-864-11	s	CONDUCTOR, CHIP (1608)
R1105	1-218-887-11	s	RESISTOR,CHIP 47K 1/10W (1608)
R1106	1-218-863-11	s	RESISTOR,CHIP 4.7K 1/10W(1608)
R1107	1-218-887-11	s	RESISTOR,CHIP 47K 1/10W (1608)
R1108	1-218-887-11	s	RESISTOR,CHIP 47K 1/10W (1608)
R1109	1-216-864-11	s	CONDUCTOR, CHIP (1608)
R1122	1-216-864-11	s	CONDUCTOR, CHIP (1608)
R1125	1-218-887-11	s	RESISTOR,CHIP 47K 1/10W (1608)
R1300	1-218-871-11	s	RESISTOR,CHIP 10K 1/10W (1608)
R1301	1-218-867-11	s	RESISTOR,CHIP 6.8K 1/10W(1608)
R1302	1-218-823-11	s	RESISTOR,CHIP 100 1/10W (1608)
R1304	1-218-887-11	s	RESISTOR,CHIP 47K 1/10W (1608)
R1305	1-218-887-11	s	RESISTOR,CHIP 47K 1/10W (1608)
R1306	1-216-864-11	s	CONDUCTOR, CHIP (1608)
R1307	1-218-855-11	s	RESISTOR,CHIP 2.2K 1/10W(1608)
R1308	1-218-855-11	s	RESISTOR,CHIP 2.2K 1/10W(1608)
R1309	1-218-863-11	s	RESISTOR,CHIP 4.7K 1/10W(1608)
R1310	1-218-863-11	s	RESISTOR,CHIP 4.7K 1/10W(1608)
R1311	1-218-887-11	s	RESISTOR,CHIP 47K 1/10W (1608)

(SS-89 BOARD [SUFFIX 17-])

Ref. No. or Q'ty	Part No.	SP	Description
R1312	1-218-887-11	s	RESISTOR,CHIP 47K 1/10W (1608)
R1313	1-218-887-11	s	RESISTOR,CHIP 47K 1/10W (1608)
R1319	1-218-871-11	s	RESISTOR,CHIP 10K 1/10W (1608)
R1320	1-218-867-11	s	RESISTOR,CHIP 6.8K 1/10W(1608)
R1321	1-216-864-11	s	CONDUCTOR, CHIP (1608)
R1340	1-218-887-11	s	RESISTOR,CHIP 47K 1/10W (1608)
R1506	1-218-895-11	s	RESISTOR,CHIP 100K 1/10W(1608)
R1507	1-218-871-11	s	RESISTOR,CHIP 10K 1/10W (1608)
R1508	1-218-871-11	s	RESISTOR,CHIP 10K 1/10W (1608)
R1509	1-218-823-11	s	RESISTOR,CHIP 100 1/10W (1608)
R1510	1-218-895-11	s	RESISTOR,CHIP 100K 1/10W(1608)
R1511	1-218-895-11	s	RESISTOR,CHIP 100K 1/10W(1608)
R1512	1-218-871-11	s	RESISTOR,CHIP 10K 1/10W (1608)
R1513	1-218-871-11	s	RESISTOR,CHIP 10K 1/10W (1608)
R1514	1-211-977-11	s	RESISTOR,CHIP 22 1/10W (1608)
R1515	1-211-977-11	s	RESISTOR,CHIP 22 1/10W (1608)
R1516	1-218-871-11	s	RESISTOR,CHIP 10K 1/10W (1608)
R1517	1-218-871-11	s	RESISTOR,CHIP 10K 1/10W (1608)
R1518	1-218-871-11	s	RESISTOR,CHIP 10K 1/10W (1608)
R1519	1-211-977-11	s	RESISTOR,CHIP 22 1/10W (1608)
R1520	1-211-977-11	s	RESISTOR,CHIP 22 1/10W (1608)
R1522	1-218-895-11	s	RESISTOR,CHIP 100K 1/10W(1608)
R1523	1-218-895-11	s	RESISTOR,CHIP 100K 1/10W(1608)
R1524	1-218-871-11	s	RESISTOR,CHIP 10K 1/10W (1608)
R1525	1-218-871-11	s	RESISTOR,CHIP 10K 1/10W (1608)
R1526	1-216-864-11	s	CONDUCTOR, CHIP (1608)
R1527	1-218-823-11	s	RESISTOR,CHIP 100 1/10W (1608)
R1528	1-218-871-11	s	RESISTOR,CHIP 10K 1/10W (1608)
R1529	1-218-871-11	s	RESISTOR,CHIP 10K 1/10W (1608)
R1530	1-218-871-11	s	RESISTOR,CHIP 10K 1/10W (1608)
R1531	1-218-871-11	s	RESISTOR,CHIP 10K 1/10W (1608)
R1532	1-218-871-11	s	RESISTOR,CHIP 10K 1/10W (1608)
R1533	1-218-871-11	s	RESISTOR,CHIP 10K 1/10W (1608)
R1534	1-218-871-11	s	RESISTOR,CHIP 10K 1/10W (1608)
R1535	1-218-827-11	s	RESISTOR,CHIP 150 1/10W (1608)
R1536	1-218-847-11	s	RESISTOR, CHIP 1K 1/10W (1608)
R1537	1-218-827-11	s	RESISTOR,CHIP 150 1/10W (1608)
R1538	1-218-847-11	s	RESISTOR, CHIP 1K 1/10W (1608)
R1539	1-218-827-11	s	RESISTOR,CHIP 150 1/10W (1608)
R1540	1-218-847-11	s	RESISTOR, CHIP 1K 1/10W (1608)
R1700	1-218-887-11	s	RESISTOR,CHIP 47K 1/10W (1608)
R1701	1-218-887-11	s	RESISTOR,CHIP 47K 1/10W (1608)
R1702	1-218-887-11	s	RESISTOR,CHIP 47K 1/10W (1608)
R1703	1-218-887-11	s	RESISTOR,CHIP 47K 1/10W (1608)
R1704	1-218-887-11	s	RESISTOR,CHIP 47K 1/10W (1608)
R1705	1-218-887-11	s	RESISTOR,CHIP 47K 1/10W (1608)
R1706	1-218-823-11	s	RESISTOR,CHIP 100 1/10W (1608)
R1707	1-218-887-11	s	RESISTOR,CHIP 47K 1/10W (1608)
R1708	1-218-887-11	s	RESISTOR,CHIP 47K 1/10W (1608)
R1709	1-218-887-11	s	RESISTOR,CHIP 47K 1/10W (1608)
R1710	1-218-887-11	s	RESISTOR,CHIP 47K 1/10W (1608)
R2100	1-218-887-11	s	RESISTOR,CHIP 47K 1/10W (1608)
R2101	1-218-887-11	s	RESISTOR,CHIP 47K 1/10W (1608)
R2102	1-218-887-11	s	RESISTOR,CHIP 47K 1/10W (1608)
R2103	1-218-887-11	s	RESISTOR,CHIP 47K 1/10W (1608)
R2104	1-218-887-11	s	RESISTOR,CHIP 47K 1/10W (1608)
R2105	1-218-887-11	s	RESISTOR,CHIP 47K 1/10W (1608)
R2108	1-216-864-11	s	CONDUCTOR, CHIP (1608)
R2110	1-216-864-11	s	CONDUCTOR, CHIP (1608)

(SS-89 BOARD [SUFFIX 17-])

Ref. No. or Q'ty	Part No.	SP	Description
R2111	1-218-823-11	s	RESISTOR,CHIP 100 1/10W (1608)
R2112	1-218-887-11	s	RESISTOR,CHIP 47K 1/10W (1608)
R2113	1-218-871-11	s	RESISTOR,CHIP 10K 1/10W (1608)
R2114	1-218-871-11	s	RESISTOR,CHIP 10K 1/10W (1608)
R2115	1-211-977-11	s	RESISTOR,CHIP 22 1/10W (1608)
R2116	1-216-864-11	s	CONDUCTOR, CHIP (1608)
R2118	1-216-864-11	s	CONDUCTOR, CHIP (1608)
R2120	1-216-864-11	s	CONDUCTOR, CHIP (1608)
R2121	1-218-887-11	s	RESISTOR,CHIP 47K 1/10W (1608)
R2123	1-218-887-11	s	RESISTOR,CHIP 47K 1/10W (1608)
R2124	1-218-823-11	s	RESISTOR,CHIP 100 1/10W (1608)
R2125	1-218-887-11	s	RESISTOR,CHIP 47K 1/10W (1608)
R2127	1-216-864-11	s	CONDUCTOR, CHIP (1608)
R2128	1-216-864-11	s	CONDUCTOR, CHIP (1608)
R2130	1-216-864-11	s	CONDUCTOR, CHIP (1608)
R2131	1-218-887-11	s	RESISTOR,CHIP 47K 1/10W (1608)
R2132	1-218-887-11	s	RESISTOR,CHIP 47K 1/10W (1608)
R2134	1-218-887-11	s	RESISTOR,CHIP 47K 1/10W (1608)
R2135	1-216-864-11	s	CONDUCTOR, CHIP (1608)
R2136	1-218-887-11	s	RESISTOR,CHIP 47K 1/10W (1608)
R2137	1-218-823-11	s	RESISTOR,CHIP 100 1/10W (1608)
R2138	1-211-977-11	s	RESISTOR,CHIP 22 1/10W (1608)
R2139	1-211-977-11	s	RESISTOR,CHIP 22 1/10W (1608)
R2140	1-211-977-11	s	RESISTOR,CHIP 22 1/10W (1608)
R2141	1-218-895-11	s	RESISTOR,CHIP 100K 1/10W(1608)
R2142	1-218-871-11	s	RESISTOR,CHIP 10K 1/10W (1608)
R2143	1-218-871-11	s	RESISTOR,CHIP 10K 1/10W (1608)
R2144	1-218-871-11	s	RESISTOR,CHIP 10K 1/10W (1608)
R2306	1-218-863-11	s	RESISTOR,CHIP 4.7K 1/10W(1608)
R2307	1-218-877-11	s	RESISTOR,CHIP 18K 1/10W (1608)
R2308	1-218-871-11	s	RESISTOR,CHIP 10K 1/10W (1608)
R2309	1-218-865-11	s	RESISTOR,CHIP 5.6K 1/10W(1608)
R2310	1-218-871-11	s	RESISTOR,CHIP 10K 1/10W (1608)
R2311	1-218-859-11	s	RESISTOR,CHIP 3.3K 1/10W(1608)
R2312	1-218-859-11	s	RESISTOR,CHIP 3.3K 1/10W(1608)
R2313	1-218-879-11	s	RESISTOR,CHIP 22K 1/10W (1608)
R2314	1-218-879-11	s	RESISTOR,CHIP 22K 1/10W (1608)
R2315	1-218-871-11	s	RESISTOR,CHIP 10K 1/10W (1608)
R2316	1-216-857-11	s	RESISTOR,CHIP 1M 1/10W(1608)
R2317	1-218-859-11	s	RESISTOR,CHIP 3.3K 1/10W(1608)
R2318	1-218-871-11	s	RESISTOR,CHIP 10K 1/10W (1608)
R2319	1-218-853-11	s	RESISTOR,CHIP 1.8K 1/10W(1608)
R2320	1-218-903-11	s	RESISTOR,CHIP 220K 1/10W(1608)
R2321	1-218-839-11	s	RESISTOR,CHIP 470 1/10W (1608)
R2322	1-218-871-11	s	RESISTOR,CHIP 10K 1/10W (1608)
R2324	1-218-871-11	s	RESISTOR,CHIP 10K 1/10W (1608)
R2326	1-218-907-11	s	RESISTOR,CHIP 330K 1/10W(1608)
R2327	1-218-859-11	s	RESISTOR,CHIP 3.3K 1/10W(1608)
R2328	1-218-879-11	s	RESISTOR,CHIP 22K 1/10W (1608)
R2329	1-218-907-11	s	RESISTOR,CHIP 330K 1/10W(1608)
R2330	1-218-859-11	s	RESISTOR,CHIP 3.3K 1/10W(1608)
R2331	1-218-879-11	s	RESISTOR,CHIP 22K 1/10W (1608)
R2332	1-218-871-11	s	RESISTOR,CHIP 10K 1/10W (1608)
R2333	1-218-865-11	s	RESISTOR,CHIP 5.6K 1/10W(1608)
R2334	1-218-831-11	s	RESISTOR, CHIP 220 1/10W(1608)
R2335	1-218-871-11	s	RESISTOR,CHIP 10K 1/10W (1608)
R2336	1-218-871-11	s	RESISTOR,CHIP 10K 1/10W (1608)
R2337	1-218-847-11	s	RESISTOR, CHIP 1K 1/10W (1608)
R2338	1-218-871-11	s	RESISTOR,CHIP 10K 1/10W (1608)

(SS-89 BOARD [SUFFIX 17-])

Ref. No. or Q'ty	Part No.	SP	Description
R2339	1-218-875-11	s	RESISTOR,CHIP 15K 1/10W (1608)
R2340	1-211-985-11	s	RESISTOR,CHIP 47 1/10W (1608)
R2341	1-211-985-11	s	RESISTOR,CHIP 47 1/10W (1608)
R2342	1-211-985-11	s	RESISTOR,CHIP 47 1/10W (1608)
R2343	1-211-985-11	s	RESISTOR,CHIP 47 1/10W (1608)
R2344	1-218-871-11	s	RESISTOR,CHIP 10K 1/10W (1608)
R2345	1-218-871-11	s	RESISTOR,CHIP 10K 1/10W (1608)
R2346	1-218-871-11	s	RESISTOR,CHIP 10K 1/10W (1608)
R2347	1-218-871-11	s	RESISTOR,CHIP 10K 1/10W (1608)
R2348	1-216-864-11	s	CONDUCTOR, CHIP (1608)
R2349	1-216-864-11	s	CONDUCTOR, CHIP (1608)
R2350	1-218-855-11	s	RESISTOR,CHIP 2.2K 1/10W(1608)
R2351	1-218-855-11	s	RESISTOR,CHIP 2.2K 1/10W(1608)
R2352	1-218-855-11	s	RESISTOR,CHIP 2.2K 1/10W(1608)
R2353	1-218-855-11	s	RESISTOR,CHIP 2.2K 1/10W(1608)
R2354	1-218-871-11	s	RESISTOR,CHIP 10K 1/10W (1608)
R2355	1-216-864-11	s	CONDUCTOR, CHIP (1608)
R2356	1-216-864-11	s	CONDUCTOR, CHIP (1608)
R2357	1-216-864-11	s	CONDUCTOR, CHIP (1608)
RB100	1-233-578-11	s	RESISTOR,CHIP NETWORK 47K
RB101	1-233-576-11	s	RESISTOR,CHIP NETWORK 100
RB102	1-233-810-21	s	RES, NETWORK 100K (3216)
RB103	1-233-578-11	s	RESISTOR,CHIP NETWORK 47K
RB104	1-233-575-11	s	RES, CHIP NETWORK 22
RB105	1-233-575-11	s	RES, CHIP NETWORK 22
RB106	1-233-575-11	s	RES, CHIP NETWORK 22
RB107	1-233-575-11	s	RES, CHIP NETWORK 22
RB108	1-233-575-11	s	RES, CHIP NETWORK 22
RB109	1-233-575-11	s	RES, CHIP NETWORK 22
RB110	1-233-575-11	s	RES, CHIP NETWORK 22
RB111	1-233-575-11	s	RES, CHIP NETWORK 22
RB112	1-233-575-11	s	RES, CHIP NETWORK 22
RB113	1-233-575-11	s	RES, CHIP NETWORK 22
RB114	1-233-575-11	s	RES, CHIP NETWORK 22
RB300	1-233-270-11	s	RESISTOR, NETWORK (8 GANG) 10K
RB301	1-236-908-11	s	RESISTOR,NETWORK 10K (3216)
RB302	1-233-810-21	s	RES, NETWORK 100K (3216)
RB1100	1-233-665-11	s	NETWORK, RES (8 GANG) 47K
RB1101	1-233-665-11	s	NETWORK, RES (8 GANG) 47K
RB1102	1-233-665-11	s	NETWORK, RES (8 GANG) 47K
RB1103	1-233-576-11	s	RESISTOR,CHIP NETWORK 100
RB1104	1-233-578-11	s	RESISTOR,CHIP NETWORK 47K
RB1105	1-233-575-11	s	RES, CHIP NETWORK 22
RB1106	1-233-575-11	s	RES, CHIP NETWORK 22
RB1107	1-233-575-11	s	RES, CHIP NETWORK 22
RB1108	1-233-575-11	s	RES, CHIP NETWORK 22
RB1109	1-233-575-11	s	RES, CHIP NETWORK 22
RB1110	1-233-575-11	s	RES, CHIP NETWORK 22
RB1111	1-233-575-11	s	RES, CHIP NETWORK 22
RB1112	1-233-575-11	s	RES, CHIP NETWORK 22
RB1113	1-233-575-11	s	RES, CHIP NETWORK 22
RB1114	1-233-575-11	s	RES, CHIP NETWORK 22
RB1115	1-233-575-11	s	RES, CHIP NETWORK 22
RB1116	1-233-575-11	s	RES, CHIP NETWORK 22
RB1500	1-233-270-11	s	RESISTOR, NETWORK (8 GANG) 10K
RB1501	1-233-270-11	s	RESISTOR, NETWORK (8 GANG) 10K
RB1502	1-233-665-11	s	NETWORK, RES (8 GANG) 47K
RB1700	1-233-575-11	s	RES, CHIP NETWORK 22
RB1701	1-233-578-11	s	RESISTOR,CHIP NETWORK 47K

(SS-89 BOARD [SUFFIX 17-])

Ref. No. or Q'ty	Part No.	SP	Description
RB1702	1-233-575-11	s	RES, CHIP NETWORK 22
RB2100	1-233-665-11	s	NETWORK, RES (8 GANG) 47K
RB2101	1-233-665-11	s	NETWORK, RES (8 GANG) 47K
RB2102	1-234-397-11	s	NETWORK, RES (8 GANG) 100K
RB2103	1-234-397-11	s	NETWORK, RES (8 GANG) 100K
RB2104	1-234-397-11	s	NETWORK, RES (8 GANG) 100K
RB2105	1-233-575-11	s	RES, CHIP NETWORK 22
RB2106	1-233-575-11	s	RES, CHIP NETWORK 22
RB2107	1-233-575-11	s	RES, CHIP NETWORK 22
RB2108	1-233-575-11	s	RES, CHIP NETWORK 22
RB2109	1-233-575-11	s	RES, CHIP NETWORK 22
RB2110	1-233-575-11	s	RES, CHIP NETWORK 22
RB2111	1-234-397-11	s	NETWORK, RES (8 GANG) 100K
RB2112	1-234-397-11	s	NETWORK, RES (8 GANG) 100K
RB2113	1-234-397-11	s	NETWORK, RES (8 GANG) 100K
RB2114	1-233-575-11	s	RES, CHIP NETWORK 22
RB2115	1-233-575-11	s	RES, CHIP NETWORK 22
RB2116	1-233-575-11	s	RES, CHIP NETWORK 22
RB2117	1-233-575-11	s	RES, CHIP NETWORK 22
RB2118	1-233-575-11	s	RES, CHIP NETWORK 22
RB2119	1-234-397-11	s	NETWORK, RES (8 GANG) 100K
RB2120	1-234-397-11	s	NETWORK, RES (8 GANG) 100K
RB2121	1-233-477-11	s	NETWORK, RES (8 GANG) 1K
RB2122	1-234-397-11	s	NETWORK, RES (8 GANG) 100K
RB2123	1-233-575-11	s	RES, CHIP NETWORK 22
RB2124	1-233-575-11	s	RES, CHIP NETWORK 22
RB2125	1-233-575-11	s	RES, CHIP NETWORK 22
RB2126	1-233-575-11	s	RES, CHIP NETWORK 22
RB2127	1-233-575-11	s	RES, CHIP NETWORK 22
RB2128	1-233-575-11	s	RES, CHIP NETWORK 22
RB2129	1-233-575-11	s	RES, CHIP NETWORK 22
RB2130	1-233-575-11	s	RES, CHIP NETWORK 22
RV300	1-241-265-11	s	RESISTOR ADJ 20K (CERMET)
S100	1-771-721-11	s	SWITCH, TACTILE
S101	1-692-270-41	s	SWITCH, SLIDE
S300	1-771-721-11	s	SWITCH, TACTILE
S900	1-771-721-11	s	SWITCH, TACTILE
S1100	1-771-721-11	s	SWITCH, TACTILE
S1500	1-771-721-11	s	SWITCH, TACTILE
S1501	1-692-271-31	s	SWITCH, SLIDE
S1502	1-692-271-31	s	SWITCH, SLIDE
TP300	1-535-877-22	s	CHIP,CHECKER (TEST POINT)
TP301	1-535-877-22	s	CHIP,CHECKER (TEST POINT)
TP302	1-535-877-22	s	CHIP,CHECKER (TEST POINT)
TP303	1-535-877-22	s	CHIP,CHECKER (TEST POINT)
TP310	1-535-877-22	s	CHIP,CHECKER (TEST POINT)
TP500	1-535-877-22	s	CHIP,CHECKER (TEST POINT)
TP504	1-535-877-22	s	CHIP,CHECKER (TEST POINT)
TP505	1-535-877-22	s	CHIP,CHECKER (TEST POINT)
TP507	1-535-877-22	s	CHIP,CHECKER (TEST POINT)
TP509	1-535-877-22	s	CHIP,CHECKER (TEST POINT)
TP511	1-535-877-22	s	CHIP,CHECKER (TEST POINT)
TP702	1-535-877-22	s	CHIP,CHECKER (TEST POINT)
TP708	1-535-877-22	s	CHIP,CHECKER (TEST POINT)
TP709	1-535-877-22	s	CHIP,CHECKER (TEST POINT)
TP710	1-535-877-22	s	CHIP,CHECKER (TEST POINT)
TP711	1-535-877-22	s	CHIP,CHECKER (TEST POINT)

(SS-89 BOARD [SUFFIX 17-])

Ref. No. or Q'ty	Part No.	SP	Description
TP712	1-535-877-22	s	CHIP,CHECKER (TEST POINT)
TP713	1-535-877-22	s	CHIP,CHECKER (TEST POINT)
TP900	1-535-877-22	s	CHIP,CHECKER (TEST POINT)
TP1100	1-535-877-22	s	CHIP,CHECKER (TEST POINT)
TP1101	1-535-877-22	s	CHIP,CHECKER (TEST POINT)
TP1500	1-535-877-22	s	CHIP,CHECKER (TEST POINT)
TP1501	1-535-877-22	s	CHIP,CHECKER (TEST POINT)
TP1502	1-535-877-22	s	CHIP,CHECKER (TEST POINT)
TP1503	1-535-877-22	s	CHIP,CHECKER (TEST POINT)
TP1504	1-535-877-22	s	CHIP,CHECKER (TEST POINT)
TP1505	1-535-877-22	s	CHIP,CHECKER (TEST POINT)
TP1506	1-535-877-22	s	CHIP,CHECKER (TEST POINT)
X100	1-813-008-21	s	OSCILLATOR, CRYSTAL (SMD)
X1100	1-813-008-21	s	OSCILLATOR, CRYSTAL (SMD)

SW-1106 BOARD for MSW-M2000E/P, M2100E/P, BKMW-E2000/E3000

Ref. No. or Q'ty	Part No.	SP	Description
1pc	A-8345-973-A	s	MOUNTED CIRCUIT BOARD, SW-1106
1pc	3-708-895-01	s	CAP (PC)
1pc	3-742-645-01	s	HOLDER, LED
C1	1-107-826-11	s	CAPACITOR,CHIP CERAMIC 0.1MF
C2	1-107-826-11	s	CAPACITOR,CHIP CERAMIC 0.1MF
C3	1-107-826-11	s	CAPACITOR,CHIP CERAMIC 0.1MF
C4	1-107-826-11	s	CAPACITOR,CHIP CERAMIC 0.1MF
C5	1-126-395-11	s	CAPACITOR,ELECT 22MF/16V(CHIP)
C6	1-107-826-11	s	CAPACITOR,CHIP CERAMIC 0.1MF
C7	1-125-889-11	s	CAPACITOR, C.CERAMIC 2.2MF
C8	1-125-889-11	s	CAPACITOR, C.CERAMIC 2.2MF
C9	1-125-889-11	s	CAPACITOR, C.CERAMIC 2.2MF
C10	1-125-889-11	s	CAPACITOR, C.CERAMIC 2.2MF
C11	1-125-889-11	s	CAPACITOR, C.CERAMIC 2.2MF
C12	1-125-889-11	s	CAPACITOR, C.CERAMIC 2.2MF
CN2	1-695-320-21	o	PIN, CONNECTOR(1.5MM)SMD 2P
D1	8-719-041-85	s	LED TLY255A
D2	8-719-057-24	s	LED SLR-342MG
IC1	8-759-549-01	s	IC SN74LV125APWR
IC2	8-759-549-01	s	IC SN74LV125APWR
IC3	8-759-271-86	s	IC TC7SH04FU
IC4	8-759-196-93	s	IC TC7SH00FU-TE85R
IC5	8-759-196-93	s	IC TC7SH00FU-TE85R
IC6	8-759-196-96	s	IC TC7SH08FU (TE85R)
IC7	8-759-523-78	s	IC TC74VHC00FT(EL)
IC8	8-759-523-81	s	IC TC74VHC08FT(EL)
IC9	8-759-196-96	s	IC TC7SH08FU (TE85R)
IC10	8-759-327-60	s	IC TC7W125FU-TE12R
Q1	8-729-928-81	s	TRANSISTOR DTC144EE
Q2	8-729-928-81	s	TRANSISTOR DTC144EE
Q3	8-729-928-81	s	TRANSISTOR DTC144EE
Q4	8-729-928-81	s	TRANSISTOR DTC144EE
Q5	8-729-928-81	s	TRANSISTOR DTC144EE
Q6	8-729-928-81	s	TRANSISTOR DTC144EE
R1	1-216-833-11	s	RESISTOR,CHIP 10K 1/10W (1608)
R6	1-216-845-11	s	RESISTOR,CHIP 100K 1/10W(1608)
R8	1-216-833-11	s	RESISTOR,CHIP 10K 1/10W (1608)
R9	1-218-477-11	s	RESISTOR CHIP 220 1/4W (3225)
R11	1-216-833-11	s	RESISTOR,CHIP 10K 1/10W (1608)
R13	1-218-477-11	s	RESISTOR CHIP 220 1/4W (3225)
R14	1-216-833-11	s	RESISTOR,CHIP 10K 1/10W (1608)
R16	1-216-833-11	s	RESISTOR,CHIP 10K 1/10W (1608)
R20	1-216-833-11	s	RESISTOR,CHIP 10K 1/10W (1608)
R21	1-218-477-11	s	RESISTOR CHIP 220 1/4W (3225)
R23	1-218-477-11	s	RESISTOR CHIP 220 1/4W (3225)
R26	1-218-477-11	s	RESISTOR CHIP 220 1/4W (3225)
R29	1-218-477-11	s	RESISTOR CHIP 220 1/4W (3225)
S1	1-762-033-11	s	SWITCH, TACTILE (ILLUMINATED)
S2	1-762-042-11	s	SWITCH, TACTILE (ILLUMINATED)
S3	1-762-042-11	s	SWITCH, TACTILE (ILLUMINATED)
S4	1-762-042-11	s	SWITCH, TACTILE (ILLUMINATED)

SWC-40 BOARD

HDW-2000, D2000, M2000/P, S2000/P, A2100, M2100/P
DVW-2000/P, M2000/P
MSW-2000, M2000/P, A2000/P, M2100/P

Ref. No. or Q'ty	Part No.	SP	Description
1pc	A-8324-902-A	o	MOUNTED CIRCUIT BOARD, SWC-40
2pcs	3-708-895-01	s	CAP (PC) (Cap only for S101 or S102)
1pc	3-668-124-00	o	HOLDER,LED
C102	1-107-826-11	s	CAPACITOR,CHIP CERAMIC 0.1MF
C103	1-126-395-11	s	CAPACITOR,ELECT 22MF/16V(CHIP)
CN1	1-566-767-11	o	PIN,CONNECTOR (PC BOARD) 12P
D102	8-719-041-85	s	LED TLY255A
Q100	8-729-029-09	s	TRANSISTOR DTC143EUA-T106
Q101	8-729-029-09	s	TRANSISTOR DTC143EUA-T106
Q102	8-729-029-09	s	TRANSISTOR DTC143EUA-T106
Q103	8-729-029-09	s	TRANSISTOR DTC143EUA-T106
R100	1-218-716-11	s	RESISTOR,CHIP 10K 1/16W(1608)
R101	1-220-259-11	s	RESISTOR, CHIP 150 1/4W (3225)
R102	1-218-716-11	s	RESISTOR,CHIP 10K 1/16W(1608)
R103	1-218-716-11	s	RESISTOR,CHIP 10K 1/16W(1608)
R104	1-220-259-11	s	RESISTOR, CHIP 150 1/4W (3225)
R105	1-218-477-11	s	RESISTOR CHIP 220 1/4W (3225)
R106	1-218-477-11	s	RESISTOR CHIP 220 1/4W (3225)
S100	1-762-033-11	s	SWITCH, TACTILE (ILLUMINATED)
S101	1-762-042-11	s	SWITCH, TACTILE (ILLUMINATED)
S102	1-762-042-11	s	SWITCH, TACTILE (ILLUMINATED)

TC-104 BOARD [SUFFIX 13]

[Lot No. 261 - 355] HDW-2000, M2000/P, M2100/P, A2100
MSW-2000, M2000/P, A2000/P, M2100/P

Ref. No. or Q'ty	Part No.	SP	Description
1pc	A-8324-894-A	o	MOUNTED CIRCUIT BOARD, TC-104
1pc	3-682-047-01	o	HOLDER(A),PC BOARD
1pc	4-641-552-01	o	SADDLE, LOCK EDGE
1pc	7-682-903-21	s	SCREW +PWH 3X8(EP-FE/ZN/CM2)
C100	1-162-927-11	s	CAPACITOR,CERAMIC 100PF/50V CH
C101	1-164-156-11	s	CAPACITOR,CERAMIC 0.1MF/25V F
C102	1-128-416-11	s	CAPACITOR ELECT 100MF/16V(105C
C103	1-164-245-11	s	CAPACITOR,CERAMIC 0.015MF/25V
C104	1-162-970-11	s	CAPACITOR CERAMIC 0.01MF/25V B
C105	1-162-970-11	s	CAPACITOR CERAMIC 0.01MF/25V B
C106	1-162-967-11	s	CAPACITOR,CERAMIC 3300PF/50V B
C107	1-164-315-11	s	CAPACITOR,CERAMIC 470PF/50V CH
C108	1-164-315-11	s	CAPACITOR,CERAMIC 470PF/50V CH
C109	1-164-156-11	s	CAPACITOR,CERAMIC 0.1MF/25V F
C110	1-162-927-11	s	CAPACITOR,CERAMIC 100PF/50V CH
C111	1-128-416-11	s	CAPACITOR ELECT 100MF/16V(105C
C112	1-164-156-11	s	CAPACITOR,CERAMIC 0.1MF/25V F
C200	1-165-176-11	s	CAPACITOR,CERAMIC 47000PF/16V
C201	1-162-968-11	s	CAPACITOR,CERAMIC 4700PF/50V B
C202	1-162-968-11	s	CAPACITOR,CERAMIC 4700PF/50V B
C203	1-126-400-11	s	CAPACITOR ELECT 22MF/35V(CHIP)
C204	1-109-897-11	s	CAPACITOR,CHIP CERAMIC 0.015MF
C205	1-109-898-11	s	CAPACITOR,CHIP CERAMIC 18000PF
C206	1-164-677-11	s	CAPACITOR,CERAMIC 0.033MF/16V
C300	1-165-176-11	s	CAPACITOR,CERAMIC 47000PF/16V
C301	1-162-968-11	s	CAPACITOR,CERAMIC 4700PF/50V B
C302	1-162-968-11	s	CAPACITOR,CERAMIC 4700PF/50V B
C303	1-126-400-11	s	CAPACITOR ELECT 22MF/35V(CHIP)
C304	1-109-897-11	s	CAPACITOR,CHIP CERAMIC 0.015MF
C305	1-109-898-11	s	CAPACITOR,CHIP CERAMIC 18000PF
C306	1-164-677-11	s	CAPACITOR,CERAMIC 0.033MF/16V
C400	1-126-399-11	s	CAPACITOR ELECT 10MF/35V(CHIP)
C401	1-126-399-11	s	CAPACITOR ELECT 10MF/35V(CHIP)
C402	1-164-156-11	s	CAPACITOR,CERAMIC 0.1MF/25V F
C403	1-126-399-11	s	CAPACITOR ELECT 10MF/35V(CHIP)
C404	1-126-399-11	s	CAPACITOR ELECT 10MF/35V(CHIP)
C405	1-162-970-11	s	CAPACITOR CERAMIC 0.01MF/25V B
C406	1-162-970-11	s	CAPACITOR CERAMIC 0.01MF/25V B
C902	1-126-399-11	s	CAPACITOR ELECT 10MF/35V(CHIP)
CN100	1-573-806-21	s	PIN,CONNECTOR (6P)(SMD)(1.5MM)
CN200	1-778-552-11	o	PIN, CONNECTOR 30P
CN300	1-691-550-11	s	PIN,CONNECTOR (3P)(SMD)(1.5MM)
CN500	1-573-290-21	s	PIN,CONNECTOR (4P)(SMD)(1.5MM)
CN600	1-573-768-21	o	PIN, CONNECTOR(5P)(SMD)(1.5MM)
D100	8-719-820-41	s	DIODE 1SS302
D400	8-719-941-04	s	DIODE SB007-03CP
D401	8-719-941-04	s	DIODE SB007-03CP
IC100	8-759-523-02	s	IC TC74HC4053AFT(EL)
IC101	8-759-523-02	s	IC TC74HC4053AFT(EL)
IC102	8-759-710-28	s	IC NJM4565M-A
IC103	8-759-711-85	s	IC NJM4580E-D
IC104	8-759-338-95	s	IC NJM2903V (TE2)
IC105	8-759-392-01	s	IC TC7SH86FU (TE85R)
IC400	8-759-491-50	s	IC TC74VHCT244AFT(EL)
IC401	8-759-642-22	s	IC UPC29M05T-E2
IC402	8-759-539-89	s	IC LM2990SX-5.0

(TC-104 BOARD [SUFFIX 13])

Ref. No. or Q'ty	Part No.	SP	Description
IC900	8-759-523-79	s	IC TC74VHC02FT
L200	1-408-785-21	s	CHIP INDUCTOR 47UH (4532)
L300	1-408-785-21	s	CHIP INDUCTOR 47UH (4532)
L400	1-415-942-11	s	COIL, CHOKE 220UH
L401	1-415-942-11	s	COIL, CHOKE 220UH
LV200	1-414-007-11	s	COIL, VARIABLE
PS400	⚠ 1-533-282-21	s	CIRCUIT PROTECTOR 2A (3225)
PS401	⚠ 1-533-282-21	s	CIRCUIT PROTECTOR 2A (3225)
PS402	⚠ 1-533-282-21	s	CIRCUIT PROTECTOR 2A (3225)
Q100	8-729-209-07	s	TRANSISTOR 2SC4213-B
Q101	8-729-117-32	s	TRANSISTOR 2SC4177
Q102	8-729-140-63	s	TRANSISTOR 2SA1611-M5M6
Q200	8-729-028-91	s	TRANSISTOR DTA144EUA-T106
Q202	8-729-029-14	s	TRANSISTOR DTC144EUA-T106
Q203	8-729-824-34	s	TRANSISTOR 2SJ187
Q205	8-729-141-75	s	TRANSISTOR 2SD596DV345
Q206	8-729-141-75	s	TRANSISTOR 2SD596DV345
Q300	8-729-028-91	s	TRANSISTOR DTA144EUA-T106
Q301	8-729-029-14	s	TRANSISTOR DTC144EUA-T106
Q302	8-729-824-34	s	TRANSISTOR 2SJ187
Q303	8-729-209-07	s	TRANSISTOR 2SC4213-B
Q304	8-729-209-07	s	TRANSISTOR 2SC4213-B
Q401	8-729-028-91	s	TRANSISTOR DTA144EUA-T106
Q900	8-729-028-91	s	TRANSISTOR DTA144EUA-T106
Q901	8-729-028-91	s	TRANSISTOR DTA144EUA-T106
R100	1-218-700-11	s	RESISTOR,CHIP 2.2K 1/16W(1608)
R101	1-218-700-11	s	RESISTOR,CHIP 2.2K 1/16W(1608)
R102	1-218-716-11	s	RESISTOR,CHIP 10K 1/16W(1608)
R103	1-218-752-11	s	RESISTOR,CHIP 330K 1/16W(1608)
R104	1-218-696-11	s	RESISTOR,CHIP 1.5K 1/16W(1608)
R105	1-218-644-11	s	RESISTOR,CHIP 10 1/16W
R106	1-218-736-11	s	RESISTOR,CHIP 68K 1/16W(1608)
R107	1-218-716-11	s	RESISTOR,CHIP 10K 1/16W(1608)
R108	1-218-728-11	s	RESISTOR,CHIP 33K 1/16W
R109	1-218-676-11	s	RESISTOR,CHIP 220 1/16W(1608)
R110	1-218-690-11	s	RESISTOR,CHIP 820 1/16W (1608)
R111	1-218-752-11	s	RESISTOR,CHIP 330K 1/16W(1608)
R112	1-218-696-11	s	RESISTOR,CHIP 1.5K 1/16W(1608)
R113	1-218-720-11	s	RESISTOR,CHIP 15K 1/16W(1608)
R114	1-218-716-11	s	RESISTOR,CHIP 10K 1/16W(1608)
R115	1-218-712-11	s	RESISTOR,METAL 6.8K 1/16W
R116	1-218-696-11	s	RESISTOR,CHIP 1.5K 1/16W(1608)
R117	1-218-698-11	s	RESISTOR,CHIP 1.8K 1/16W(1608)
R118	1-218-728-11	s	RESISTOR,CHIP 33K 1/16W
R119	1-218-728-11	s	RESISTOR,CHIP 33K 1/16W
R120	1-218-704-11	s	RESISTOR,CHIP 3.3K 1/16W(1608)
R121	1-218-716-11	s	RESISTOR,CHIP 10K 1/16W(1608)
R122	1-218-716-11	s	RESISTOR,CHIP 10K 1/16W(1608)
R123	1-218-692-11	s	RESISTOR,CHIP 1.0K 1/16W(1608)
R124	1-218-752-11	s	RESISTOR,CHIP 330K 1/16W(1608)
R125	1-218-708-11	s	RESISTOR,CHIP 4.7K 1/16W(1608)
R126	1-218-708-11	s	RESISTOR,CHIP 4.7K 1/16W(1608)
R127	1-218-716-11	s	RESISTOR,CHIP 10K 1/16W(1608)
R200	1-218-732-11	s	RESISTOR,CHIP 47K 1/16W(1608)
R203	1-218-734-11	s	RESISTOR,CHIP 56K 1/16W(1608)
R205	1-218-734-11	s	RESISTOR,CHIP 56K 1/16W(1608)

(TC-104 BOARD [SUFFIX 13])

Ref. No. or Q'ty	Part No.	SP	Description
R206	1-218-724-11	s	RESISTOR,CHIP 22K 1/16W(1608)
R207	1-218-724-11	s	RESISTOR,CHIP 22K 1/16W(1608)
R208	1-216-298-00	s	RESISTOR,CHIP 2.2 1/10(2012)
R209	1-216-298-00	s	RESISTOR,CHIP 2.2 1/10(2012)
R210	1-218-236-91	s	RESISTOR,CHIP 1 1/4W
R300	1-218-732-11	s	RESISTOR,CHIP 47K 1/16W(1608)
R301	1-218-729-11	s	RESISTOR,CHIP 36K 1/16W(1608)
R302	1-218-731-11	s	RESISTOR,METAL 43K 1/16
R303	1-218-724-11	s	RESISTOR,CHIP 22K 1/16W(1608)
R304	1-218-724-11	s	RESISTOR,CHIP 22K 1/16W(1608)
R305	1-216-298-00	s	RESISTOR,CHIP 2.2 1/10(2012)
R306	1-216-298-00	s	RESISTOR,CHIP 2.2 1/10(2012)
R307	1-218-236-91	s	RESISTOR,CHIP 1 1/4W
R401	1-218-732-11	s	RESISTOR,CHIP 47K 1/16W(1608)
R900	1-218-716-11	s	RESISTOR,CHIP 10K 1/16W(1608)
R901	1-218-732-11	s	RESISTOR,CHIP 47K 1/16W(1608)
R902	1-218-732-11	s	RESISTOR,CHIP 47K 1/16W(1608)
RB401	1-233-665-11	s	NETWORK, RES (8 GANG) 47K
T200	1-424-511-11	s	TRANSFORMER,FE
T300	1-424-511-11	s	TRANSFORMER,FE

TC-104 BOARD [SUFFIX 14-]

[Lot No. 361 -] HDW-2000, M2000/P, M2100/P, A2100
[Lot No. 4C2 -] HDW-D2000
[Lot No. 462 -] HDW-S2000/P
[Lot No. 434 -] DVW-2000/P, M2000/P
[Lot No. 361 -] MSW-2000, M2000/P, A2000/P, M2100/P
[Lot No. 495 -] MSW-M2000E/P, M2100E/P

Ref. No. or Q'ty	Part No.	SP	Description
1pc	A-8324-894-A	o	MOUNTED CIRCUIT BOARD, TC-104
C100	1-162-927-11	s	CAPACITOR,CERAMIC 100PF/50V CH
C101	1-107-826-11	s	CAPACITOR,CHIP CERAMIC 0.1MF
C102	1-115-459-11	s	CAPACITOR,ELECT 47MF/6.3V(BP)
C103	1-162-970-11	s	CAPACITOR CERAMIC 0.01MF/25V B
C104	1-162-970-11	s	CAPACITOR CERAMIC 0.01MF/25V B
C105	1-162-970-11	s	CAPACITOR CERAMIC 0.01MF/25V B
C106	1-162-967-11	s	CAPACITOR,CERAMIC 3300PF/50V B
C107	1-164-315-11	s	CAPACITOR,CERAMIC 470PF/50V CH
C108	1-164-315-11	s	CAPACITOR,CERAMIC 470PF/50V CH
C109	1-107-826-11	s	CAPACITOR,CHIP CERAMIC 0.1MF
C110	1-162-927-11	s	CAPACITOR,CERAMIC 100PF/50V CH
C111	1-115-459-11	s	CAPACITOR,ELECT 47MF/6.3V(BP)
C112	1-107-826-11	s	CAPACITOR,CHIP CERAMIC 0.1MF
C113	1-107-826-11	s	CAPACITOR,CHIP CERAMIC 0.1MF
C114	1-107-826-11	s	CAPACITOR,CHIP CERAMIC 0.1MF
C115	1-162-968-11	s	CAPACITOR,CERAMIC 4700PF/50V B
C117	1-115-459-11	s	CAPACITOR,ELECT 47MF/6.3V(BP)
C200	1-115-339-11	s	CAPACITOR,CERAMIC 0.1MF/50V
C201	1-162-968-11	s	CAPACITOR,CERAMIC 4700PF/50V B
C202	1-162-968-11	s	CAPACITOR,CERAMIC 4700PF/50V B
C203	1-126-400-11	s	CAPACITOR ELECT 22MF/35V(CHIP)
C204	1-109-897-11	s	CAPACITOR,CHIP CERAMIC 0.015MF
C205	1-109-898-11	s	CAPACITOR,CHIP CERAMIC 18000PF
C206	1-164-227-11	s	CAPACITOR,CERAMIC 0.022MF/25V
C211	1-162-970-11	s	CAPACITOR CERAMIC 0.01MF/25V B
C300	1-115-339-11	s	CAPACITOR,CERAMIC 0.1MF/50V
C301	1-162-968-11	s	CAPACITOR,CERAMIC 4700PF/50V B
C302	1-162-968-11	s	CAPACITOR,CERAMIC 4700PF/50V B
C303	1-126-400-11	s	CAPACITOR ELECT 22MF/35V(CHIP)
C304	1-109-897-11	s	CAPACITOR,CHIP CERAMIC 0.015MF
C305	1-109-898-11	s	CAPACITOR,CHIP CERAMIC 18000PF
C307	1-162-970-11	s	CAPACITOR CERAMIC 0.01MF/25V B
C308	1-164-227-11	s	CAPACITOR,CERAMIC 0.022MF/25V
C400	1-126-394-11	s	CAPACITOR,ELECT 10MF/16V(CHIP)
C401	1-126-394-11	s	CAPACITOR,ELECT 10MF/16V(CHIP)
C402	1-107-826-11	s	CAPACITOR,CHIP CERAMIC 0.1MF
C403	1-126-394-11	s	CAPACITOR,ELECT 10MF/16V(CHIP)
C404	1-126-394-11	s	CAPACITOR,ELECT 10MF/16V(CHIP)
C405	1-162-970-11	s	CAPACITOR CERAMIC 0.01MF/25V B
C406	1-162-970-11	s	CAPACITOR CERAMIC 0.01MF/25V B
C411	1-107-826-11	s	CAPACITOR,CHIP CERAMIC 0.1MF
C412	1-107-826-11	s	CAPACITOR,CHIP CERAMIC 0.1MF
C413	1-107-826-11	s	CAPACITOR,CHIP CERAMIC 0.1MF
C414	1-107-826-11	s	CAPACITOR,CHIP CERAMIC 0.1MF
C902	1-117-136-11	s	CAPACITOR ELECT 10MF/6.3V(BP)
CN100	1-573-806-91	s	PIN, CONNECTOR 6P
CN200	1-778-552-11	o	PIN, CONNECTOR 30P
CN300	1-691-550-11	s	PIN,CONNECTOR (3P)(SMD)(1.5MM)
CN500	1-573-290-21	s	PIN,CONNECTOR (4P)(SMD)(1.5MM)
CN600	1-573-768-21	s	PIN, CONNECTOR(5P)(SMD)(1.5MM)
D100	8-719-820-41	s	DIODE 1SS302
D400	8-719-975-40	s	DIODE RB411D (RECTI)
D401	8-719-975-40	s	DIODE RB411D (RECTI)

(TC-104 BOARD [SUFFIX 14-])

Ref. No. or Q'ty	Part No.	SP	Description
E100	1-535-877-22	s	CHIP,CHECKER (TEST POINT)
E400	1-535-877-22	s	CHIP,CHECKER (TEST POINT)
IC100	8-759-523-02	s	IC TC74HC4053AFT(EL)
IC101	8-759-523-02	s	IC TC74HC4053AFT(EL)
IC102	8-759-710-28	s	IC NJM4565M-A
IC103	8-759-422-21	s	IC NJM4580VTE2
IC104	8-759-338-95	s	IC NJM2903V (TE2)
IC105	8-759-392-01	s	IC TC7SH86FU (TE85R)
IC200	6-706-476-01	s	IC TC7SET04FU(T5RSOJF)
IC300	6-706-476-01	s	IC TC7SET04FU(T5RSOJF)
IC400	8-759-491-50	s	IC TC74VHCT244AFT(EL)
IC401	8-759-642-22	s	IC UPC29M05T-E2
IC402	8-759-539-89	s	IC LM2990SX-5.0
IC900	8-759-523-79	s	IC TC74VHC02FT
L200	1-414-400-11	s	INDUCTOR, 22UH
L300	1-414-400-11	s	INDUCTOR, 22UH
L400	1-416-919-11	s	COIL, CHOKE 150UH
L401	1-416-919-11	s	COIL, CHOKE 150UH
LV200	1-414-007-11	s	COIL, VARIABLE
PS400	⚠ 1-533-282-21	s	CIRCUIT PROTECTOR 2A (3225)
PS401	⚠ 1-533-282-21	s	CIRCUIT PROTECTOR 2A (3225)
PS402	⚠ 1-533-282-21	s	CIRCUIT PROTECTOR 2A (3225)
Q100	8-729-209-07	s	TRANSISTOR 2SC4213-B
Q101	8-729-927-99	s	TRANSISTOR 2SC4617R
Q102	8-729-928-19	s	TRANSISTOR 2SA1774R
Q200	8-729-928-27	s	TRANSISTOR DTA144EE
Q203	8-729-043-74	s	TRANSISTOR SI4435DY-T1-REVA
Q205	8-729-141-75	s	TRANSISTOR 2SD596DV345
Q206	8-729-141-75	s	TRANSISTOR 2SD596DV345
Q300	8-729-928-27	s	TRANSISTOR DTA144EE
Q302	8-729-043-74	s	TRANSISTOR SI4435DY-T1-REVA
Q303	8-729-209-07	s	TRANSISTOR 2SC4213-B
Q304	8-729-209-07	s	TRANSISTOR 2SC4213-B
Q401	8-729-928-27	s	TRANSISTOR DTA144EE
Q900	8-729-928-27	s	TRANSISTOR DTA144EE
Q901	8-729-928-27	s	TRANSISTOR DTA144EE
R100	1-218-855-11	s	RESISTOR,CHIP 2.2K 1/10W(1608)
R101	1-218-855-11	s	RESISTOR,CHIP 2.2K 1/10W(1608)
R102	1-218-871-11	s	RESISTOR,CHIP 10K 1/10W (1608)
R103	1-218-907-11	s	RESISTOR,CHIP 330K 1/10W(1608)
R104	1-218-851-11	s	RESISTOR,CHIP 1.5K 1/10W(1608)
R105	1-211-969-11	s	RESISTOR,CHIP 10 1/10W (1608)
R106	1-218-891-11	s	RESISTOR,CHIP 68K 1/10W (1608)
R107	1-218-871-11	s	RESISTOR,CHIP 10K 1/10W (1608)
R108	1-218-883-11	s	RESISTOR,CHIP 33K 1/10W (1608)
R109	1-218-831-11	s	RESISTOR, CHIP 220 1/10W(1608)
R110	1-218-845-11	s	RESISTOR,CHIP 820 1/10W (1608)
R111	1-218-907-11	s	RESISTOR,CHIP 330K 1/10W(1608)
R112	1-218-851-11	s	RESISTOR,CHIP 1.5K 1/10W(1608)
R113	1-218-875-11	s	RESISTOR,CHIP 15K 1/10W (1608)
R114	1-218-871-11	s	RESISTOR,CHIP 10K 1/10W (1608)
R115	1-218-867-11	s	RESISTOR,CHIP 6.8K 1/10W(1608)
R116	1-218-851-11	s	RESISTOR,CHIP 1.5K 1/10W(1608)
R117	1-218-853-11	s	RESISTOR,CHIP 1.8K 1/10W(1608)
R118	1-218-883-11	s	RESISTOR,CHIP 33K 1/10W (1608)
R119	1-218-883-11	s	RESISTOR,CHIP 33K 1/10W (1608)

(TC-104 BOARD [SUFFIX 14-])

Ref. No. or Q'ty	Part No.	SP	Description
R120	1-218-859-11	s	RESISTOR,CHIP 3.3K 1/10W(1608)
R121	1-218-879-11	s	RESISTOR,CHIP 22K 1/10W (1608)
R122	1-218-871-11	s	RESISTOR,CHIP 10K 1/10W (1608)
R123	1-218-847-11	s	RESISTOR, CHIP 1K 1/10W (1608)
R124	1-218-907-11	s	RESISTOR,CHIP 330K 1/10W(1608)
R125	1-218-863-11	s	RESISTOR,CHIP 4.7K 1/10W(1608)
R126	1-218-863-11	s	RESISTOR,CHIP 4.7K 1/10W(1608)
R127	1-218-871-11	s	RESISTOR,CHIP 10K 1/10W (1608)
R200	1-218-887-11	s	RESISTOR,CHIP 47K 1/10W (1608)
R202	1-216-864-11	s	CONDUCTOR, CHIP (1608)
R203	1-216-857-11	s	RESISTOR,CHIP 1M 1/10W(1608)
R205	1-218-887-11	s	RESISTOR,CHIP 47K 1/10W (1608)
R206	1-218-879-11	s	RESISTOR,CHIP 22K 1/10W (1608)
R207	1-218-879-11	s	RESISTOR,CHIP 22K 1/10W (1608)
R208	1-216-789-11	s	RESISTOR,CHIP 2.2 1/16W(1608)
R209	1-216-789-11	s	RESISTOR,CHIP 2.2 1/16W(1608)
R210	1-218-236-91	s	RESISTOR,CHIP 1 1/4W
R212	1-216-864-11	s	CONDUCTOR, CHIP (1608)
R300	1-218-887-11	s	RESISTOR,CHIP 47K 1/10W (1608)
R301	1-216-857-11	s	RESISTOR,CHIP 1M 1/10W(1608)
R302	1-218-887-11	s	RESISTOR,CHIP 47K 1/10W (1608)
R303	1-218-879-11	s	RESISTOR,CHIP 22K 1/10W (1608)
R304	1-218-879-11	s	RESISTOR,CHIP 22K 1/10W (1608)
R305	1-216-789-11	s	RESISTOR,CHIP 2.2 1/16W(1608)
R306	1-216-789-11	s	RESISTOR,CHIP 2.2 1/16W(1608)
R307	1-218-236-91	s	RESISTOR,CHIP 1 1/4W
R401	1-218-887-11	s	RESISTOR,CHIP 47K 1/10W (1608)
R900	1-218-871-11	s	RESISTOR,CHIP 10K 1/10W (1608)
R901	1-218-887-11	s	RESISTOR,CHIP 47K 1/10W (1608)
R902	1-218-887-11	s	RESISTOR,CHIP 47K 1/10W (1608)
RB401	1-233-665-11	s	NETWORK, RES (8 GANG) 47K
T200	1-424-511-11	s	TRANSFORMER,FE
T300	1-424-511-11	s	TRANSFORMER,FE
TP100	1-535-877-22	s	CHIP,CHECKER (TEST POINT)
TP101	1-535-877-22	s	CHIP,CHECKER (TEST POINT)
TP102	1-535-877-22	s	CHIP,CHECKER (TEST POINT)
TP200	1-535-877-22	s	CHIP,CHECKER (TEST POINT)
TP201	1-535-877-22	s	CHIP,CHECKER (TEST POINT)
TP301	1-535-877-22	s	CHIP,CHECKER (TEST POINT)
TP400	1-535-877-22	s	CHIP,CHECKER (TEST POINT)
TP401	1-535-877-22	s	CHIP,CHECKER (TEST POINT)

TR-119 BOARD

Ref. No. or Q'ty	Part No.	SP	Description

The components on this board are out of spare parts.
When component replacement is required, replace by the assembly (including mounted circuit board) below.

	A-8325-409-A	s	REGULATOR ASSY (RP), S TENSION

TR-120 BOARD

Ref. No. or Q'ty	Part No.	SP	Description

The components on this board are out of spare parts.
When component replacement is required, replace by the assembly (including mounted circuit board) below.

	A-8325-410-A	s	T TEN ASSY (RP)

TX-96 BOARD

Since a high frequency circuit is mounted on the TX-96 board, replacement of electrical parts are impossible. Be sure to replace the whole board when the TX-96 board is malfunctioning.

Ref. No. or Q'ty	Part No.	SP	Description
2pcs	A-8345-816-A	s	MOUNTED CIRCUIT BOARD, TX-96

VN-13 BOARD [SUFFIX 11] for BKMW-E2000

[Lot No. 314 - 444]

Ref. No. or Q'ty	Part No.	SP	Description
1pc	A-8345-968-A	s	MOUNTED CIRCUIT BOARD, VN-13
6pcs	7-682-902-11	s	SCREW +PWH 2.6X5
1pc	3-179-084-11	s	LEVER (R), C BOARD
1pc	3-179-085-11	s	LEVER (L), C BOARD
C1	1-107-826-11	s	CAPACITOR,CHIP CERAMIC 0.1MF
C2	1-107-826-11	s	CAPACITOR,CHIP CERAMIC 0.1MF
C5	1-127-692-11	s	CAP, CHIP CERAMIC 10MF B 3216
C6	1-107-826-11	s	CAPACITOR,CHIP CERAMIC 0.1MF
C7	1-107-826-11	s	CAPACITOR,CHIP CERAMIC 0.1MF
C8	1-107-826-11	s	CAPACITOR,CHIP CERAMIC 0.1MF
C9	1-107-826-11	s	CAPACITOR,CHIP CERAMIC 0.1MF
C10	1-107-826-11	s	CAPACITOR,CHIP CERAMIC 0.1MF
C11	1-107-826-11	s	CAPACITOR,CHIP CERAMIC 0.1MF
C12	1-107-826-11	s	CAPACITOR,CHIP CERAMIC 0.1MF
C13	1-107-826-11	s	CAPACITOR,CHIP CERAMIC 0.1MF
C15	1-127-692-11	s	CAP, CHIP CERAMIC 10MF B 3216
C16	1-107-826-11	s	CAPACITOR,CHIP CERAMIC 0.1MF
C17	1-107-826-11	s	CAPACITOR,CHIP CERAMIC 0.1MF
C18	1-107-826-11	s	CAPACITOR,CHIP CERAMIC 0.1MF
C19	1-107-826-11	s	CAPACITOR,CHIP CERAMIC 0.1MF
C20	1-107-826-11	s	CAPACITOR,CHIP CERAMIC 0.1MF
C21	1-107-826-11	s	CAPACITOR,CHIP CERAMIC 0.1MF
C22	1-107-826-11	s	CAPACITOR,CHIP CERAMIC 0.1MF
C23	1-107-826-11	s	CAPACITOR,CHIP CERAMIC 0.1MF
C26	1-127-692-11	s	CAP, CHIP CERAMIC 10MF B 3216
C28	1-107-826-11	s	CAPACITOR,CHIP CERAMIC 0.1MF
C29	1-107-826-11	s	CAPACITOR,CHIP CERAMIC 0.1MF
C30	1-107-826-11	s	CAPACITOR,CHIP CERAMIC 0.1MF
C31	1-107-826-11	s	CAPACITOR,CHIP CERAMIC 0.1MF
C32	1-107-826-11	s	CAPACITOR,CHIP CERAMIC 0.1MF
C33	1-107-826-11	s	CAPACITOR,CHIP CERAMIC 0.1MF
C34	1-107-826-11	s	CAPACITOR,CHIP CERAMIC 0.1MF
C35	1-107-826-11	s	CAPACITOR,CHIP CERAMIC 0.1MF
C36	1-107-826-11	s	CAPACITOR,CHIP CERAMIC 0.1MF
C101	1-107-826-11	s	CAPACITOR,CHIP CERAMIC 0.1MF
C104	1-162-927-11	s	CAPACITOR,CERAMIC 100PF/50V CH
C105	1-107-826-11	s	CAPACITOR,CHIP CERAMIC 0.1MF
C107	1-162-927-11	s	CAPACITOR,CERAMIC 100PF/50V CH
C109	1-127-820-11	s	CAPACITOR, SQUARE CHIP 4.7MF
C110	1-107-826-11	s	CAPACITOR,CHIP CERAMIC 0.1MF
C111	1-107-826-11	s	CAPACITOR,CHIP CERAMIC 0.1MF
C112	1-107-826-11	s	CAPACITOR,CHIP CERAMIC 0.1MF
C113	1-107-826-11	s	CAPACITOR,CHIP CERAMIC 0.1MF
C114	1-127-820-11	s	CAPACITOR, SQUARE CHIP 4.7MF
C115	1-107-826-11	s	CAPACITOR,CHIP CERAMIC 0.1MF
C116	1-107-826-11	s	CAPACITOR,CHIP CERAMIC 0.1MF
C117	1-107-826-11	s	CAPACITOR,CHIP CERAMIC 0.1MF
C118	1-107-826-11	s	CAPACITOR,CHIP CERAMIC 0.1MF
C119	1-107-826-11	s	CAPACITOR,CHIP CERAMIC 0.1MF
C120	1-107-826-11	s	CAPACITOR,CHIP CERAMIC 0.1MF
C121	1-107-826-11	s	CAPACITOR,CHIP CERAMIC 0.1MF
C124	1-107-826-11	s	CAPACITOR,CHIP CERAMIC 0.1MF
C125	1-107-826-11	s	CAPACITOR,CHIP CERAMIC 0.1MF
C126	1-107-826-11	s	CAPACITOR,CHIP CERAMIC 0.1MF
C127	1-107-826-11	s	CAPACITOR,CHIP CERAMIC 0.1MF
C128	1-127-692-11	s	CAP, CHIP CERAMIC 10MF B 3216
C130	1-107-826-11	s	CAPACITOR,CHIP CERAMIC 0.1MF

(VN-13 BOARD [SUFFIX 11] for BKMW-E2000)

Ref. No. or Q'ty	Part No.	SP	Description
C131	1-162-927-11	s	CAPACITOR,CERAMIC 100PF/50V CH
C132	1-162-927-11	s	CAPACITOR,CERAMIC 100PF/50V CH
C133	1-162-927-11	s	CAPACITOR,CERAMIC 100PF/50V CH
C134	1-127-715-11	s	CAPACITOR,CERAMIC 0.22MF B1608
C301	1-131-661-11	s	CAPACITOR,ELECT 100MF/10V CHIP
C302	1-131-661-11	s	CAPACITOR,ELECT 100MF/10V CHIP
C303	1-131-661-11	s	CAPACITOR,ELECT 100MF/10V CHIP
C305	1-162-970-11	s	CAPACITOR CERAMIC 0.01MF/25V B
C306	1-127-715-11	s	CAPACITOR,CERAMIC 0.22MF B1608
C307	1-107-826-11	s	CAPACITOR,CHIP CERAMIC 0.1MF
C308	1-115-416-11	s	CAPACITOR,CERAMIC 1000PF/25V
C310	1-131-661-11	s	CAPACITOR,ELECT 100MF/10V CHIP
C311	1-131-661-11	s	CAPACITOR,ELECT 100MF/10V CHIP
C312	1-131-661-11	s	CAPACITOR,ELECT 100MF/10V CHIP
C314	1-107-826-11	s	CAPACITOR,CHIP CERAMIC 0.1MF
C315	1-107-826-11	s	CAPACITOR,CHIP CERAMIC 0.1MF
C316	1-107-826-11	s	CAPACITOR,CHIP CERAMIC 0.1MF
C317	1-107-826-11	s	CAPACITOR,CHIP CERAMIC 0.1MF
C318	1-127-715-11	s	CAPACITOR,CERAMIC 0.22MF B1608
C319	1-125-889-11	s	CAPACITOR, C.CERAMIC 2.2MF
C320	1-107-826-11	s	CAPACITOR,CHIP CERAMIC 0.1MF
C321	1-125-889-11	s	CAPACITOR, C.CERAMIC 2.2MF
C322	1-115-416-11	s	CAPACITOR,CERAMIC 1000PF/25V
C323	1-162-970-11	s	CAPACITOR CERAMIC 0.01MF/25V B
C326	1-126-395-11	s	CAPACITOR,ELECT 22MF/16V(CHIP)
C327	1-131-661-11	s	CAPACITOR,ELECT 100MF/10V CHIP
C328	1-131-661-11	s	CAPACITOR,ELECT 100MF/10V CHIP
C329	1-131-661-11	s	CAPACITOR,ELECT 100MF/10V CHIP
C331	1-162-927-11	s	CAPACITOR,CERAMIC 100PF/50V CH
C332	1-107-826-11	s	CAPACITOR,CHIP CERAMIC 0.1MF
C333	1-107-826-11	s	CAPACITOR,CHIP CERAMIC 0.1MF
C334	1-125-889-11	s	CAPACITOR, C.CERAMIC 2.2MF
C335	1-125-889-11	s	CAPACITOR, C.CERAMIC 2.2MF
C336	1-107-826-11	s	CAPACITOR,CHIP CERAMIC 0.1MF
C337	1-131-661-11	s	CAPACITOR,ELECT 100MF/10V CHIP
C401	1-107-826-11	s	CAPACITOR,CHIP CERAMIC 0.1MF
C402	1-107-826-11	s	CAPACITOR,CHIP CERAMIC 0.1MF
C403	1-107-826-11	s	CAPACITOR,CHIP CERAMIC 0.1MF
C404	1-107-826-11	s	CAPACITOR,CHIP CERAMIC 0.1MF
C405	1-107-826-11	s	CAPACITOR,CHIP CERAMIC 0.1MF
C406	1-107-826-11	s	CAPACITOR,CHIP CERAMIC 0.1MF
C407	1-107-826-11	s	CAPACITOR,CHIP CERAMIC 0.1MF
C408	1-107-826-11	s	CAPACITOR,CHIP CERAMIC 0.1MF
C409	1-107-826-11	s	CAPACITOR,CHIP CERAMIC 0.1MF
C411	1-107-826-11	s	CAPACITOR,CHIP CERAMIC 0.1MF
C412	1-107-826-11	s	CAPACITOR,CHIP CERAMIC 0.1MF
C413	1-107-826-11	s	CAPACITOR,CHIP CERAMIC 0.1MF
C414	1-107-826-11	s	CAPACITOR,CHIP CERAMIC 0.1MF
C415	1-127-692-11	s	CAP, CHIP CERAMIC 10MF B 3216
C416	1-107-826-11	s	CAPACITOR,CHIP CERAMIC 0.1MF
C417	1-107-826-11	s	CAPACITOR,CHIP CERAMIC 0.1MF
C418	1-107-826-11	s	CAPACITOR,CHIP CERAMIC 0.1MF
C419	1-107-826-11	s	CAPACITOR,CHIP CERAMIC 0.1MF
C420	1-107-826-11	s	CAPACITOR,CHIP CERAMIC 0.1MF
C421	1-107-826-11	s	CAPACITOR,CHIP CERAMIC 0.1MF
C422	1-107-826-11	s	CAPACITOR,CHIP CERAMIC 0.1MF
C423	1-107-826-11	s	CAPACITOR,CHIP CERAMIC 0.1MF
C424	1-107-826-11	s	CAPACITOR,CHIP CERAMIC 0.1MF
C425	1-107-826-11	s	CAPACITOR,CHIP CERAMIC 0.1MF

(VN-13 BOARD [SUFFIX 11] for BKMW-E2000)

Ref. No. or Q'ty	Part No.	SP	Description
C426	1-107-826-11	s	CAPACITOR,CHIP CERAMIC 0.1MF
C427	1-127-692-11	s	CAP, CHIP CERAMIC 10MF B 3216
C428	1-107-826-11	s	CAPACITOR,CHIP CERAMIC 0.1MF
C429	1-127-692-11	s	CAP, CHIP CERAMIC 10MF B 3216
C430	1-107-826-11	s	CAPACITOR,CHIP CERAMIC 0.1MF
C431	1-107-826-11	s	CAPACITOR,CHIP CERAMIC 0.1MF
C432	1-107-826-11	s	CAPACITOR,CHIP CERAMIC 0.1MF
C433	1-107-826-11	s	CAPACITOR,CHIP CERAMIC 0.1MF
C434	1-107-826-11	s	CAPACITOR,CHIP CERAMIC 0.1MF
C435	1-107-826-11	s	CAPACITOR,CHIP CERAMIC 0.1MF
C436	1-107-826-11	s	CAPACITOR,CHIP CERAMIC 0.1MF
C437	1-107-826-11	s	CAPACITOR,CHIP CERAMIC 0.1MF
C438	1-107-826-11	s	CAPACITOR,CHIP CERAMIC 0.1MF
C439	1-107-826-11	s	CAPACITOR,CHIP CERAMIC 0.1MF
C440	1-107-826-11	s	CAPACITOR,CHIP CERAMIC 0.1MF
C441	1-107-826-11	s	CAPACITOR,CHIP CERAMIC 0.1MF
C442	1-107-826-11	s	CAPACITOR,CHIP CERAMIC 0.1MF
C443	1-107-826-11	s	CAPACITOR,CHIP CERAMIC 0.1MF
C444	1-162-927-11	s	CAPACITOR,CERAMIC 100PF/50V CH
C445	1-107-826-11	s	CAPACITOR,CHIP CERAMIC 0.1MF
C501	1-107-826-11	s	CAPACITOR,CHIP CERAMIC 0.1MF
C502	1-107-826-11	s	CAPACITOR,CHIP CERAMIC 0.1MF
C503	1-127-692-11	s	CAP, CHIP CERAMIC 10MF B 3216
C504	1-107-826-11	s	CAPACITOR,CHIP CERAMIC 0.1MF
C505	1-127-692-11	s	CAP, CHIP CERAMIC 10MF B 3216
C506	1-107-826-11	s	CAPACITOR,CHIP CERAMIC 0.1MF
C507	1-107-826-11	s	CAPACITOR,CHIP CERAMIC 0.1MF
C508	1-107-826-11	s	CAPACITOR,CHIP CERAMIC 0.1MF
C509	1-107-826-11	s	CAPACITOR,CHIP CERAMIC 0.1MF
C510	1-107-826-11	s	CAPACITOR,CHIP CERAMIC 0.1MF
C511	1-107-826-11	s	CAPACITOR,CHIP CERAMIC 0.1MF
C512	1-107-826-11	s	CAPACITOR,CHIP CERAMIC 0.1MF
C513	1-107-826-11	s	CAPACITOR,CHIP CERAMIC 0.1MF
C514	1-107-826-11	s	CAPACITOR,CHIP CERAMIC 0.1MF
C515	1-107-826-11	s	CAPACITOR,CHIP CERAMIC 0.1MF
C516	1-107-826-11	s	CAPACITOR,CHIP CERAMIC 0.1MF
C517	1-107-826-11	s	CAPACITOR,CHIP CERAMIC 0.1MF
C518	1-107-826-11	s	CAPACITOR,CHIP CERAMIC 0.1MF
C519	1-107-826-11	s	CAPACITOR,CHIP CERAMIC 0.1MF
C520	1-107-826-11	s	CAPACITOR,CHIP CERAMIC 0.1MF
C602	1-162-970-11	s	CAPACITOR CERAMIC 0.01MF/25V B
C610	1-127-692-11	s	CAP, CHIP CERAMIC 10MF B 3216
C611	1-127-692-11	s	CAP, CHIP CERAMIC 10MF B 3216
C612	1-127-692-11	s	CAP, CHIP CERAMIC 10MF B 3216
C613	1-127-692-11	s	CAP, CHIP CERAMIC 10MF B 3216
C614	1-107-826-11	s	CAPACITOR,CHIP CERAMIC 0.1MF
C615	1-107-826-11	s	CAPACITOR,CHIP CERAMIC 0.1MF
C616	1-107-826-11	s	CAPACITOR,CHIP CERAMIC 0.1MF
C617	1-107-826-11	s	CAPACITOR,CHIP CERAMIC 0.1MF
C618	1-107-826-11	s	CAPACITOR,CHIP CERAMIC 0.1MF
C619	1-107-826-11	s	CAPACITOR,CHIP CERAMIC 0.1MF
C620	1-107-826-11	s	CAPACITOR,CHIP CERAMIC 0.1MF
C621	1-107-826-11	s	CAPACITOR,CHIP CERAMIC 0.1MF
C622	1-107-826-11	s	CAPACITOR,CHIP CERAMIC 0.1MF
C623	1-107-826-11	s	CAPACITOR,CHIP CERAMIC 0.1MF
C624	1-107-826-11	s	CAPACITOR,CHIP CERAMIC 0.1MF
C625	1-107-826-11	s	CAPACITOR,CHIP CERAMIC 0.1MF
C626	1-107-826-11	s	CAPACITOR,CHIP CERAMIC 0.1MF
C627	1-107-826-11	s	CAPACITOR,CHIP CERAMIC 0.1MF

(VN-13 BOARD [SUFFIX 11] for BKMW-E2000)

Ref. No. or Q'ty	Part No.	SP	Description
C628	1-107-826-11	s	CAPACITOR,CHIP CERAMIC 0.1MF
C629	1-107-826-11	s	CAPACITOR,CHIP CERAMIC 0.1MF
C630	1-107-826-11	s	CAPACITOR,CHIP CERAMIC 0.1MF
C631	1-107-826-11	s	CAPACITOR,CHIP CERAMIC 0.1MF
C632	1-107-826-11	s	CAPACITOR,CHIP CERAMIC 0.1MF
C633	1-107-826-11	s	CAPACITOR,CHIP CERAMIC 0.1MF
C634	1-107-826-11	s	CAPACITOR,CHIP CERAMIC 0.1MF
C635	1-107-826-11	s	CAPACITOR,CHIP CERAMIC 0.1MF
C636	1-107-826-11	s	CAPACITOR,CHIP CERAMIC 0.1MF
C637	1-162-970-11	s	CAPACITOR CERAMIC 0.01MF/25V B
C638	1-162-970-11	s	CAPACITOR CERAMIC 0.01MF/25V B
C639	1-162-970-11	s	CAPACITOR CERAMIC 0.01MF/25V B
C640	1-162-970-11	s	CAPACITOR CERAMIC 0.01MF/25V B
C641	1-162-970-11	s	CAPACITOR CERAMIC 0.01MF/25V B
C642	1-162-970-11	s	CAPACITOR CERAMIC 0.01MF/25V B
C643	1-162-970-11	s	CAPACITOR CERAMIC 0.01MF/25V B
C644	1-162-970-11	s	CAPACITOR CERAMIC 0.01MF/25V B
C645	1-162-970-11	s	CAPACITOR CERAMIC 0.01MF/25V B
C646	1-162-970-11	s	CAPACITOR CERAMIC 0.01MF/25V B
C647	1-162-970-11	s	CAPACITOR CERAMIC 0.01MF/25V B
C648	1-162-970-11	s	CAPACITOR CERAMIC 0.01MF/25V B
C649	1-162-970-11	s	CAPACITOR CERAMIC 0.01MF/25V B
C650	1-162-970-11	s	CAPACITOR CERAMIC 0.01MF/25V B
C651	1-162-970-11	s	CAPACITOR CERAMIC 0.01MF/25V B
C652	1-162-970-11	s	CAPACITOR CERAMIC 0.01MF/25V B
C653	1-162-970-11	s	CAPACITOR CERAMIC 0.01MF/25V B
C654	1-162-970-11	s	CAPACITOR CERAMIC 0.01MF/25V B
C655	1-162-970-11	s	CAPACITOR CERAMIC 0.01MF/25V B
C656	1-162-970-11	s	CAPACITOR CERAMIC 0.01MF/25V B
C657	1-162-970-11	s	CAPACITOR CERAMIC 0.01MF/25V B
C658	1-162-970-11	s	CAPACITOR CERAMIC 0.01MF/25V B
C659	1-162-970-11	s	CAPACITOR CERAMIC 0.01MF/25V B
C660	1-162-970-11	s	CAPACITOR CERAMIC 0.01MF/25V B
C661	1-162-970-11	s	CAPACITOR CERAMIC 0.01MF/25V B
C662	1-162-970-11	s	CAPACITOR CERAMIC 0.01MF/25V B
C663	1-162-970-11	s	CAPACITOR CERAMIC 0.01MF/25V B
C664	1-162-970-11	s	CAPACITOR CERAMIC 0.01MF/25V B
C665	1-162-970-11	s	CAPACITOR CERAMIC 0.01MF/25V B
C666	1-162-970-11	s	CAPACITOR CERAMIC 0.01MF/25V B
C667	1-162-970-11	s	CAPACITOR CERAMIC 0.01MF/25V B
C668	1-162-970-11	s	CAPACITOR CERAMIC 0.01MF/25V B
C669	1-162-970-11	s	CAPACITOR CERAMIC 0.01MF/25V B
C670	1-162-970-11	s	CAPACITOR CERAMIC 0.01MF/25V B
C671	1-162-970-11	s	CAPACITOR CERAMIC 0.01MF/25V B
C672	1-162-970-11	s	CAPACITOR CERAMIC 0.01MF/25V B
C673	1-162-970-11	s	CAPACITOR CERAMIC 0.01MF/25V B
C674	1-162-970-11	s	CAPACITOR CERAMIC 0.01MF/25V B
C675	1-162-970-11	s	CAPACITOR CERAMIC 0.01MF/25V B
C676	1-162-970-11	s	CAPACITOR CERAMIC 0.01MF/25V B
C677	1-162-970-11	s	CAPACITOR CERAMIC 0.01MF/25V B
C678	1-162-970-11	s	CAPACITOR CERAMIC 0.01MF/25V B
C679	1-162-970-11	s	CAPACITOR CERAMIC 0.01MF/25V B
C680	1-162-970-11	s	CAPACITOR CERAMIC 0.01MF/25V B
C681	1-162-970-11	s	CAPACITOR CERAMIC 0.01MF/25V B
C682	1-162-970-11	s	CAPACITOR CERAMIC 0.01MF/25V B
C683	1-162-970-11	s	CAPACITOR CERAMIC 0.01MF/25V B
C684	1-162-970-11	s	CAPACITOR CERAMIC 0.01MF/25V B
C685	1-162-970-11	s	CAPACITOR CERAMIC 0.01MF/25V B
C686	1-162-970-11	s	CAPACITOR CERAMIC 0.01MF/25V B

(VN-13 BOARD [SUFFIX 11] for BKMW-E2000)

Ref. No. or Q'ty	Part No.	SP	Description
C687	1-162-970-11	s	CAPACITOR CERAMIC 0.01MF/25V B
C688	1-162-970-11	s	CAPACITOR CERAMIC 0.01MF/25V B
C689	1-162-970-11	s	CAPACITOR CERAMIC 0.01MF/25V B
C690	1-162-970-11	s	CAPACITOR CERAMIC 0.01MF/25V B
C691	1-162-970-11	s	CAPACITOR CERAMIC 0.01MF/25V B
C692	1-162-970-11	s	CAPACITOR CERAMIC 0.01MF/25V B
C693	1-162-970-11	s	CAPACITOR CERAMIC 0.01MF/25V B
C694	1-162-970-11	s	CAPACITOR CERAMIC 0.01MF/25V B
C695	1-162-970-11	s	CAPACITOR CERAMIC 0.01MF/25V B
C696	1-127-692-11	s	CAP, CHIP CERAMIC 10MF B 3216
C697	1-162-970-11	s	CAPACITOR CERAMIC 0.01MF/25V B
C698	1-127-692-11	s	CAP, CHIP CERAMIC 10MF B 3216
C699	1-162-970-11	s	CAPACITOR CERAMIC 0.01MF/25V B
C700	1-162-970-11	s	CAPACITOR CERAMIC 0.01MF/25V B
C701	1-127-692-11	s	CAP, CHIP CERAMIC 10MF B 3216
C702	1-162-970-11	s	CAPACITOR CERAMIC 0.01MF/25V B
C703	1-127-692-11	s	CAP, CHIP CERAMIC 10MF B 3216
C704	1-162-970-11	s	CAPACITOR CERAMIC 0.01MF/25V B
C705	1-162-970-11	s	CAPACITOR CERAMIC 0.01MF/25V B
C706	1-162-970-11	s	CAPACITOR CERAMIC 0.01MF/25V B
C707	1-162-970-11	s	CAPACITOR CERAMIC 0.01MF/25V B
C902	1-162-970-11	s	CAPACITOR CERAMIC 0.01MF/25V B
C904	1-162-970-11	s	CAPACITOR CERAMIC 0.01MF/25V B
C905	1-162-970-11	s	CAPACITOR CERAMIC 0.01MF/25V B
C906	1-162-970-11	s	CAPACITOR CERAMIC 0.01MF/25V B
C907	1-162-970-11	s	CAPACITOR CERAMIC 0.01MF/25V B
C908	1-162-970-11	s	CAPACITOR CERAMIC 0.01MF/25V B
C909	1-107-826-11	s	CAPACITOR,CHIP CERAMIC 0.1MF
C910	1-162-927-11	s	CAPACITOR,CERAMIC 100PF/50V CH
C911	1-107-826-11	s	CAPACITOR,CHIP CERAMIC 0.1MF
C912	1-162-927-11	s	CAPACITOR,CERAMIC 100PF/50V CH
C1001	1-107-826-11	s	CAPACITOR,CHIP CERAMIC 0.1MF
C1002	1-107-826-11	s	CAPACITOR,CHIP CERAMIC 0.1MF
C1003	1-107-826-11	s	CAPACITOR,CHIP CERAMIC 0.1MF
C1004	1-107-826-11	s	CAPACITOR,CHIP CERAMIC 0.1MF
C1005	1-107-826-11	s	CAPACITOR,CHIP CERAMIC 0.1MF
C1006	1-107-826-11	s	CAPACITOR,CHIP CERAMIC 0.1MF
C1007	1-107-826-11	s	CAPACITOR,CHIP CERAMIC 0.1MF
C1008	1-107-826-11	s	CAPACITOR,CHIP CERAMIC 0.1MF
C1009	1-107-826-11	s	CAPACITOR,CHIP CERAMIC 0.1MF
C1010	1-107-826-11	s	CAPACITOR,CHIP CERAMIC 0.1MF
C1011	1-107-826-11	s	CAPACITOR,CHIP CERAMIC 0.1MF
C1012	1-107-826-11	s	CAPACITOR,CHIP CERAMIC 0.1MF
C1013	1-107-826-11	s	CAPACITOR,CHIP CERAMIC 0.1MF
C1014	1-107-826-11	s	CAPACITOR,CHIP CERAMIC 0.1MF
C1015	1-107-826-11	s	CAPACITOR,CHIP CERAMIC 0.1MF
C1016	1-107-826-11	s	CAPACITOR,CHIP CERAMIC 0.1MF
C1017	1-107-826-11	s	CAPACITOR,CHIP CERAMIC 0.1MF
C1018	1-107-826-11	s	CAPACITOR,CHIP CERAMIC 0.1MF
C1019	1-107-826-11	s	CAPACITOR,CHIP CERAMIC 0.1MF
C1020	1-107-826-11	s	CAPACITOR,CHIP CERAMIC 0.1MF
C1021	1-107-826-11	s	CAPACITOR,CHIP CERAMIC 0.1MF
C1022	1-107-826-11	s	CAPACITOR,CHIP CERAMIC 0.1MF
C1023	1-107-826-11	s	CAPACITOR,CHIP CERAMIC 0.1MF
C1024	1-107-826-11	s	CAPACITOR,CHIP CERAMIC 0.1MF
C1025	1-107-826-11	s	CAPACITOR,CHIP CERAMIC 0.1MF
C1026	1-107-826-11	s	CAPACITOR,CHIP CERAMIC 0.1MF
C1027	1-107-826-11	s	CAPACITOR,CHIP CERAMIC 0.1MF
C1028	1-107-826-11	s	CAPACITOR,CHIP CERAMIC 0.1MF

(VN-13 BOARD [SUFFIX 11] for BKMW-E2000)

Ref. No. or Q'ty	Part No.	SP	Description
C1029	1-107-826-11	s	CAPACITOR,CHIP CERAMIC 0.1MF
C1030	1-107-826-11	s	CAPACITOR,CHIP CERAMIC 0.1MF
C1031	1-107-826-11	s	CAPACITOR,CHIP CERAMIC 0.1MF
C1032	1-107-826-11	s	CAPACITOR,CHIP CERAMIC 0.1MF
C1103	1-164-378-11	s	CAPACITOR CERAMIC 30PF/50V CH
C1104	1-164-378-11	s	CAPACITOR CERAMIC 30PF/50V CH
C1105	1-107-826-11	s	CAPACITOR,CHIP CERAMIC 0.1MF
C1106	1-162-970-11	s	CAPACITOR CERAMIC 0.01MF/25V B
C1107	1-162-970-11	s	CAPACITOR CERAMIC 0.01MF/25V B
C1108	1-162-970-11	s	CAPACITOR CERAMIC 0.01MF/25V B
C1109	1-162-970-11	s	CAPACITOR CERAMIC 0.01MF/25V B
C1110	1-107-826-11	s	CAPACITOR,CHIP CERAMIC 0.1MF
C1111	1-107-826-11	s	CAPACITOR,CHIP CERAMIC 0.1MF
C1112	1-107-826-11	s	CAPACITOR,CHIP CERAMIC 0.1MF
C1113	1-107-826-11	s	CAPACITOR,CHIP CERAMIC 0.1MF
C1115	1-107-826-11	s	CAPACITOR,CHIP CERAMIC 0.1MF
C1116	1-162-970-11	s	CAPACITOR CERAMIC 0.01MF/25V B
C1117	1-107-826-11	s	CAPACITOR,CHIP CERAMIC 0.1MF
C1118	1-162-970-11	s	CAPACITOR CERAMIC 0.01MF/25V B
C1119	1-162-970-11	s	CAPACITOR CERAMIC 0.01MF/25V B
C1120	1-162-970-11	s	CAPACITOR CERAMIC 0.01MF/25V B
C1121	1-107-826-11	s	CAPACITOR,CHIP CERAMIC 0.1MF
C1122	1-107-826-11	s	CAPACITOR,CHIP CERAMIC 0.1MF
C1123	1-107-826-11	s	CAPACITOR,CHIP CERAMIC 0.1MF
C1124	1-107-826-11	s	CAPACITOR,CHIP CERAMIC 0.1MF
C1125	1-162-970-11	s	CAPACITOR CERAMIC 0.01MF/25V B
C1126	1-107-826-11	s	CAPACITOR,CHIP CERAMIC 0.1MF
C1127	1-162-970-11	s	CAPACITOR CERAMIC 0.01MF/25V B
C1128	1-107-826-11	s	CAPACITOR,CHIP CERAMIC 0.1MF
C1131	1-107-826-11	s	CAPACITOR,CHIP CERAMIC 0.1MF
C1132	1-127-820-11	s	CAPACITOR, SQUARE CHIP 4.7MF
CN1	1-580-057-11	o	PIN,CONNECTOR 4P
CN5	1-566-567-11	o	CONNECTOR 60P
CN102	1-770-678-11	o	CONNECTOR, BOARD TO BOARD 50P
CN110	1-764-007-11	o	PIN, CONNECTOR (SMD) 12P
CN401	1-580-789-21	o	PIN,CONNECTOR (SMD) 6P
CN901	1-580-789-21	o	PIN,CONNECTOR (SMD) 6P
CN1102	1-580-056-21	o	PIN,CONNECTOR 3P
CN1103	1-817-292-11	s	JACK, MODULAR (WITH LED, PT)
D101	8-719-064-52	s	DIODE CL-191YG-CD-T
D102	8-719-064-52	s	DIODE CL-191YG-CD-T
D103	8-719-064-52	s	DIODE CL-191YG-CD-T
D104	8-719-071-10	s	DIODE CL-191HR-CD-T
D301	8-719-066-98	s	DIODE RB051L-40
D302	8-719-938-75	s	DIODE SB05-05CP (RECTI)
D303	8-719-938-75	s	DIODE SB05-05CP (RECTI)
D304	8-719-066-98	s	DIODE RB051L-40
D901	8-719-064-52	s	DIODE CL-191YG-CD-T
D1101	8-719-064-52	s	DIODE CL-191YG-CD-T
D1102	8-719-064-52	s	DIODE CL-191YG-CD-T
D1103	8-719-064-52	s	DIODE CL-191YG-CD-T
D1104	8-719-064-52	s	DIODE CL-191YG-CD-T
D1105	8-719-064-52	s	DIODE CL-191YG-CD-T
D1106	8-719-064-52	s	DIODE CL-191YG-CD-T
F301	⚠ 1-576-270-11	s	FUSE CHIP 4A/125V (6125)
F302	⚠ 1-576-270-11	s	FUSE CHIP 4A/125V (6125)
F303	⚠ 1-576-270-11	s	FUSE CHIP 4A/125V (6125)

(VN-13 BOARD [SUFFIX 11] for BKMW-E2000)

Ref. No. or Q'ty	Part No.	SP	Description
IC3	6-701-025-01	s	IC SN74LVC16244ADGGR
IC4	6-701-025-01	s	IC SN74LVC16244ADGGR
IC5	8-759-524-27	s	IC TC74VHC244FT(EL)
IC102	8-759-327-60	s	IC TC7W125FU-TE12R
IC104	8-759-651-70	s	IC PST592JMT
IC105	8-759-825-21	s	IC XC61CN1502NR
IC107	8-759-675-88	o	IC MBM29F040C-90PD-SFK
IC109	8-759-675-88	o	IC MBM29F040C-90PD-SFK
IC110	6-700-628-01	s	IC HY57V281620HCT-H-TR
IC111	6-700-628-01	s	IC HY57V281620HCT-H-TR
IC113	8-759-392-77	s	IC SN74LVC245APW (E20)
IC114	8-759-475-53	s	IC TC74LCX541FT(EL)
IC115	8-759-392-77	s	IC SN74LVC245APW (E20)
IC301	8-759-597-57	s	IC LTC1628CG#TR
IC303	8-759-572-86	s	IC LT1085CM-TR
IC306	8-759-523-81	s	IC TC74VHC08FT(EL)
IC307	8-759-524-27	s	IC TC74VHC244FT(EL)
IC401	8-759-712-32	s	IC SN65LVDS389DBTR
IC402	8-759-712-31	s	IC SN65LVDT388DBTR
IC403	8-759-712-32	s	IC SN65LVDS389DBTR
IC404	8-759-712-32	s	IC SN65LVDS389DBTR
IC405	8-759-712-31	s	IC SN65LVDT388DBTR
IC406	8-759-712-31	s	IC SN65LVDT388DBTR
IC407	8-759-475-53	s	IC TC74LCX541FT(EL)
IC408	8-759-524-50	s	IC TC74VHC541FT(EL)
IC409	8-759-524-50	s	IC TC74VHC541FT(EL)
IC410	8-759-524-50	s	IC TC74VHC541FT(EL)
IC414	8-759-475-53	s	IC TC74LCX541FT(EL)
IC415	8-759-562-02	s	IC MD36053X-30
IC416	6-703-644-01	s	IC AD1895AYRSRL
IC417	6-700-744-01	s	IC XC18V04VQ44C
IC418	8-759-651-70	s	IC PST592JMT
IC419	8-759-524-27	s	IC TC74VHC244FT(EL)
IC420	8-759-277-63	s	IC TC7W14FU (TE12R)
IC502	8-759-647-49	s	IC AL422B-TEL
IC901	6-700-744-01	s	IC XC18V04VQ44C
IC903	6-700-744-01	s	IC XC18V04VQ44C
IC904	6-700-744-01	s	IC XC18V04VQ44C
IC905	6-700-744-01	s	IC XC18V04VQ44C
IC906	6-700-744-01	s	IC XC18V04VQ44C
IC908	8-759-524-27	s	IC TC74VHC244FT(EL)
IC909	8-759-327-60	s	IC TC7W125FU-TE12R
IC910	8-759-651-70	s	IC PST592JMT
IC1001	6-700-628-01	s	IC HY57V281620HCT-H-TR
IC1002	6-700-628-01	s	IC HY57V281620HCT-H-TR
IC1003	6-702-748-01	s	IC HY57V561620BT-HDR
IC1004	6-702-748-01	s	IC HY57V561620BT-HDR
IC1005	6-702-748-01	s	IC HY57V561620BT-HDR
IC1006	6-702-748-01	s	IC HY57V561620BT-HDR
IC1007	6-700-628-01	s	IC HY57V281620HCT-H-TR
IC1008	6-700-628-01	s	IC HY57V281620HCT-H-TR
IC1102	8-759-549-01	s	IC SN74LV125APWR
IS107	1-540-151-11	s	SOCKET, IC
IS109	1-540-151-11	s	SOCKET, IC
L1	1-412-923-21	s	INDUCTOR CHIP 0.047UH (2520)
L2	1-412-923-21	s	INDUCTOR CHIP 0.047UH (2520)
L301	1-419-630-11	s	COIL, CHOKE 4.7UH
L302	1-469-970-11	s	INDUCTOR, (SMD) 15UH

(VN-13 BOARD [SUFFIX 11] for BKMW-E2000)

Ref. No. or Q'ty	Part No.	SP	Description
L306	1-416-948-21	s	COIL, CHOKE (SMD)
L308	1-469-970-11	s	INDUCTOR, (SMD) 15UH
L309	1-419-630-11	s	COIL, CHOKE 4.7UH
L401	1-412-923-21	s	INDUCTOR CHIP 0.047UH (2520)
L402	1-412-923-21	s	INDUCTOR CHIP 0.047UH (2520)
L403	1-412-923-21	s	INDUCTOR CHIP 0.047UH (2520)
Q1	8-729-046-75	s	TRANSISTOR SI2301DS-T1
Q2	8-729-928-81	s	TRANSISTOR DTC144EE
Q301	8-729-047-85	s	TRANSISTOR SI4416DY-T1
Q302	8-729-047-85	s	TRANSISTOR SI4416DY-T1
Q303	8-729-047-85	s	TRANSISTOR SI4416DY-T1
Q304	8-729-047-85	s	TRANSISTOR SI4416DY-T1
Q305	8-729-928-81	s	TRANSISTOR DTC144EE
Q306	8-729-140-63	s	TRANSISTOR 2SA1611-M5M6
Q307	8-729-045-53	s	TRANSISTOR SI4431DY-T1
R1	1-216-829-11	s	RESISTOR,CHIP 4.7K 1/10W(1608)
R2	1-216-801-11	s	RESISTOR,CHIP 22 1/10W (1608)
R3	1-216-801-11	s	RESISTOR,CHIP 22 1/10W (1608)
R4	1-216-801-11	s	RESISTOR,CHIP 22 1/10W (1608)
R5	1-216-801-11	s	RESISTOR,CHIP 22 1/10W (1608)
R6	1-216-801-11	s	RESISTOR,CHIP 22 1/10W (1608)
R7	1-216-801-11	s	RESISTOR,CHIP 22 1/10W (1608)
R8	1-216-801-11	s	RESISTOR,CHIP 22 1/10W (1608)
R9	1-216-801-11	s	RESISTOR,CHIP 22 1/10W (1608)
R10	1-216-801-11	s	RESISTOR,CHIP 22 1/10W (1608)
R11	1-216-829-11	s	RESISTOR,CHIP 4.7K 1/10W(1608)
R12	1-216-829-11	s	RESISTOR,CHIP 4.7K 1/10W(1608)
R13	1-216-829-11	s	RESISTOR,CHIP 4.7K 1/10W(1608)
R14	1-216-829-11	s	RESISTOR,CHIP 4.7K 1/10W(1608)
R15	1-216-829-11	s	RESISTOR,CHIP 4.7K 1/10W(1608)
R16	1-216-864-11	s	CONDUCTOR, CHIP (1608)
R17	1-216-829-11	s	RESISTOR,CHIP 4.7K 1/10W(1608)
R18	1-216-829-11	s	RESISTOR,CHIP 4.7K 1/10W(1608)
R21	1-216-821-11	s	RESISTOR,CHIP 1.0K 1/10W(1608)
R22	1-216-829-11	s	RESISTOR,CHIP 4.7K 1/10W(1608)
R23	1-216-829-11	s	RESISTOR,CHIP 4.7K 1/10W(1608)
R24	1-216-829-11	s	RESISTOR,CHIP 4.7K 1/10W(1608)
R25	1-216-829-11	s	RESISTOR,CHIP 4.7K 1/10W(1608)
R26	1-216-829-11	s	RESISTOR,CHIP 4.7K 1/10W(1608)
R28	1-216-801-11	s	RESISTOR,CHIP 22 1/10W (1608)
R29	1-216-801-11	s	RESISTOR,CHIP 22 1/10W (1608)
R30	1-216-829-11	s	RESISTOR,CHIP 4.7K 1/10W(1608)
R31	1-216-801-11	s	RESISTOR,CHIP 22 1/10W (1608)
R32	1-216-801-11	s	RESISTOR,CHIP 22 1/10W (1608)
R33	1-216-801-11	s	RESISTOR,CHIP 22 1/10W (1608)
R34	1-216-801-11	s	RESISTOR,CHIP 22 1/10W (1608)
R35	1-216-829-11	s	RESISTOR,CHIP 4.7K 1/10W(1608)
R36	1-216-829-11	s	RESISTOR,CHIP 4.7K 1/10W(1608)
R37	1-216-829-11	s	RESISTOR,CHIP 4.7K 1/10W(1608)
R38	1-216-801-11	s	RESISTOR,CHIP 22 1/10W (1608)
R39	1-216-801-11	s	RESISTOR,CHIP 22 1/10W (1608)
R40	1-216-801-11	s	RESISTOR,CHIP 22 1/10W (1608)
R41	1-216-829-11	s	RESISTOR,CHIP 4.7K 1/10W(1608)
R42	1-216-801-11	s	RESISTOR,CHIP 22 1/10W (1608)
R43	1-216-801-11	s	RESISTOR,CHIP 22 1/10W (1608)
R44	1-216-797-11	s	RESISTOR,CHIP 10 1/10W 1608
R45	1-216-801-11	s	RESISTOR,CHIP 22 1/10W (1608)
R101	1-216-801-11	s	RESISTOR,CHIP 22 1/10W (1608)

(VN-13 BOARD [SUFFIX 11] for BKMW-E2000)

Ref. No. or Q'ty	Part No.	SP	Description
R106	1-216-845-11	s	RESISTOR,CHIP 100K 1/10W(1608)
R107	1-216-821-11	s	RESISTOR,CHIP 1.0K 1/10W(1608)
R108	1-216-801-11	s	RESISTOR,CHIP 22 1/10W (1608)
R109	1-216-801-11	s	RESISTOR,CHIP 22 1/10W (1608)
R110	1-216-801-11	s	RESISTOR,CHIP 22 1/10W (1608)
R112	1-216-821-11	s	RESISTOR,CHIP 1.0K 1/10W(1608)
R113	1-216-864-11	s	CONDUCTOR, CHIP (1608)
R116	1-216-821-11	s	RESISTOR,CHIP 1.0K 1/10W(1608)
R118	1-216-821-11	s	RESISTOR,CHIP 1.0K 1/10W(1608)
R119	1-216-821-11	s	RESISTOR,CHIP 1.0K 1/10W(1608)
R120	1-216-821-11	s	RESISTOR,CHIP 1.0K 1/10W(1608)
R121	1-216-821-11	s	RESISTOR,CHIP 1.0K 1/10W(1608)
R122	1-216-845-11	s	RESISTOR,CHIP 100K 1/10W(1608)
R123	1-216-845-11	s	RESISTOR,CHIP 100K 1/10W(1608)
R124	1-216-821-11	s	RESISTOR,CHIP 1.0K 1/10W(1608)
R125	1-216-821-11	s	RESISTOR,CHIP 1.0K 1/10W(1608)
R126	1-216-821-11	s	RESISTOR,CHIP 1.0K 1/10W(1608)
R127	1-216-829-11	s	RESISTOR,CHIP 4.7K 1/10W(1608)
R128	1-216-829-11	s	RESISTOR,CHIP 4.7K 1/10W(1608)
R129	1-216-801-11	s	RESISTOR,CHIP 22 1/10W (1608)
R130	1-216-845-11	s	RESISTOR,CHIP 100K 1/10W(1608)
R131	1-216-801-11	s	RESISTOR,CHIP 22 1/10W (1608)
R132	1-216-845-11	s	RESISTOR,CHIP 100K 1/10W(1608)
R133	1-216-801-11	s	RESISTOR,CHIP 22 1/10W (1608)
R138	1-216-801-11	s	RESISTOR,CHIP 22 1/10W (1608)
R139	1-216-801-11	s	RESISTOR,CHIP 22 1/10W (1608)
R140	1-216-829-11	s	RESISTOR,CHIP 4.7K 1/10W(1608)
R142	1-216-864-11	s	CONDUCTOR, CHIP (1608)
R143	1-216-864-11	s	CONDUCTOR, CHIP (1608)
R144	1-216-864-11	s	CONDUCTOR, CHIP (1608)
R145	1-216-864-11	s	CONDUCTOR, CHIP (1608)
R146	1-216-864-11	s	CONDUCTOR, CHIP (1608)
R147	1-216-805-11	s	RESISTOR,CHIP 47 1/10W 1608
R148	1-216-801-11	s	RESISTOR,CHIP 22 1/10W (1608)
R149	1-216-833-11	s	RESISTOR,CHIP 10K 1/10W (1608)
R301	1-219-610-11	s	RESISTOR, (SQUARE TYPE) 0.022
R302	1-216-797-11	s	RESISTOR,CHIP 10 1/10W 1608
R303	1-216-797-11	s	RESISTOR,CHIP 10 1/10W 1608
R304	1-218-879-11	s	RESISTOR,CHIP 22K 1/10W (1608)
R305	1-218-875-11	s	RESISTOR,CHIP 15K 1/10W (1608)
R306	1-216-829-11	s	RESISTOR,CHIP 4.7K 1/10W(1608)
R307	1-216-864-11	s	CONDUCTOR, CHIP (1608)
R308	1-216-809-11	s	RESISTOR,CHIP 100 1/10W 1608
R309	1-216-829-11	s	RESISTOR,CHIP 4.7K 1/10W(1608)
R310	1-218-823-11	s	RESISTOR,CHIP 100 1/10W (1608)
R311	1-218-827-11	s	RESISTOR,CHIP 150 1/10W (1608)
R312	1-218-827-11	s	RESISTOR,CHIP 150 1/10W (1608)
R313	1-218-870-11	s	RESISTOR,CHIP 9.1K 1/10W(1608)
R314	1-218-871-11	s	RESISTOR,CHIP 10K 1/10W (1608)
R315	1-216-797-11	s	RESISTOR,CHIP 10 1/10W 1608
R316	1-216-797-11	s	RESISTOR,CHIP 10 1/10W 1608
R317	1-219-610-11	s	RESISTOR, (SQUARE TYPE) 0.022
R318	1-216-864-11	s	CONDUCTOR, CHIP (1608)
R319	1-216-864-11	s	CONDUCTOR, CHIP (1608)
R320	1-216-864-11	s	CONDUCTOR, CHIP (1608)
R321	1-216-864-11	s	CONDUCTOR, CHIP (1608)
R322	1-216-864-11	s	CONDUCTOR, CHIP (1608)
R323	1-216-864-11	s	CONDUCTOR, CHIP (1608)
R324	1-216-864-11	s	CONDUCTOR, CHIP (1608)

(VN-13 BOARD [SUFFIX 11] for BKMW-E2000)

Ref. No. or Q'ty	Part No.	SP	Description
R325	1-216-864-11	s	CONDUCTOR, CHIP (1608)
R326	1-216-864-11	s	CONDUCTOR, CHIP (1608)
R327	1-216-864-11	s	CONDUCTOR, CHIP (1608)
R328	1-216-864-11	s	CONDUCTOR, CHIP (1608)
R329	1-216-864-11	s	CONDUCTOR, CHIP (1608)
R330	1-216-864-11	s	CONDUCTOR, CHIP (1608)
R331	1-216-864-11	s	CONDUCTOR, CHIP (1608)
R332	1-216-864-11	s	CONDUCTOR, CHIP (1608)
R333	1-216-864-11	s	CONDUCTOR, CHIP (1608)
R334	1-216-864-11	s	CONDUCTOR, CHIP (1608)
R335	1-216-864-11	s	CONDUCTOR, CHIP (1608)
R336	1-216-864-11	s	CONDUCTOR, CHIP (1608)
R337	1-216-864-11	s	CONDUCTOR, CHIP (1608)
R338	1-216-864-11	s	CONDUCTOR, CHIP (1608)
R339	1-216-864-11	s	CONDUCTOR, CHIP (1608)
R340	1-216-864-11	s	CONDUCTOR, CHIP (1608)
R341	1-216-864-11	s	CONDUCTOR, CHIP (1608)
R342	1-216-864-11	s	CONDUCTOR, CHIP (1608)
R343	1-216-864-11	s	CONDUCTOR, CHIP (1608)
R344	1-216-864-11	s	CONDUCTOR, CHIP (1608)
R345	1-216-864-11	s	CONDUCTOR, CHIP (1608)
R346	1-216-864-11	s	CONDUCTOR, CHIP (1608)
R347	1-216-864-11	s	CONDUCTOR, CHIP (1608)
R348	1-216-864-11	s	CONDUCTOR, CHIP (1608)
R349	1-216-864-11	s	CONDUCTOR, CHIP (1608)
R350	1-216-864-11	s	CONDUCTOR, CHIP (1608)
R351	1-216-864-11	s	CONDUCTOR, CHIP (1608)
R352	1-216-864-11	s	CONDUCTOR, CHIP (1608)
R353	1-216-864-11	s	CONDUCTOR, CHIP (1608)
R354	1-216-864-11	s	CONDUCTOR, CHIP (1608)
R355	1-216-864-11	s	CONDUCTOR, CHIP (1608)
R356	1-216-864-11	s	CONDUCTOR, CHIP (1608)
R357	1-216-864-11	s	CONDUCTOR, CHIP (1608)
R358	1-216-864-11	s	CONDUCTOR, CHIP (1608)
R359	1-216-864-11	s	CONDUCTOR, CHIP (1608)
R360	1-216-864-11	s	CONDUCTOR, CHIP (1608)
R361	1-216-864-11	s	CONDUCTOR, CHIP (1608)
R362	1-216-864-11	s	CONDUCTOR, CHIP (1608)
R363	1-216-864-11	s	CONDUCTOR, CHIP (1608)
R364	1-216-864-11	s	CONDUCTOR, CHIP (1608)
R365	1-216-864-11	s	CONDUCTOR, CHIP (1608)
R366	1-216-864-11	s	CONDUCTOR, CHIP (1608)
R367	1-216-864-11	s	CONDUCTOR, CHIP (1608)
R368	1-216-864-11	s	CONDUCTOR, CHIP (1608)
R369	1-216-864-11	s	CONDUCTOR, CHIP (1608)
R370	1-216-864-11	s	CONDUCTOR, CHIP (1608)
R371	1-216-864-11	s	CONDUCTOR, CHIP (1608)
R372	1-216-864-11	s	CONDUCTOR, CHIP (1608)
R373	1-216-864-11	s	CONDUCTOR, CHIP (1608)
R376	1-216-829-11	s	RESISTOR,CHIP 4.7K 1/10W(1608)
R377	1-216-829-11	s	RESISTOR,CHIP 4.7K 1/10W(1608)
R378	1-216-845-11	s	RESISTOR,CHIP 100K 1/10W(1608)
R379	1-216-845-11	s	RESISTOR,CHIP 100K 1/10W(1608)
R380	1-216-805-11	s	RESISTOR,CHIP 47 1/10W 1608
R382	1-216-864-11	s	CONDUCTOR, CHIP (1608)
R383	1-216-833-11	s	RESISTOR,CHIP 10K 1/10W (1608)
R384	1-216-845-11	s	RESISTOR,CHIP 100K 1/10W(1608)
R385	1-216-805-11	s	RESISTOR,CHIP 47 1/10W 1608
R386	1-216-864-11	s	CONDUCTOR, CHIP (1608)

(VN-13 BOARD [SUFFIX 11] for BKMW-E2000)

Ref. No. or Q'ty	Part No.	SP	Description
R387	1-216-801-11	s	RESISTOR,CHIP 22 1/10W (1608)
R388	1-216-864-11	s	CONDUCTOR, CHIP (1608)
R389	1-216-821-11	s	RESISTOR,CHIP 1.0K 1/10W(1608)
R390	1-216-821-11	s	RESISTOR,CHIP 1.0K 1/10W(1608)
R391	1-216-815-11	s	RESISTOR,CHIP 330 1/10W 1608
R392	1-216-815-11	s	RESISTOR,CHIP 330 1/10W 1608
R401	1-216-797-11	s	RESISTOR,CHIP 10 1/10W 1608
R402	1-216-797-11	s	RESISTOR,CHIP 10 1/10W 1608
R403	1-216-797-11	s	RESISTOR,CHIP 10 1/10W 1608
R404	1-216-797-11	s	RESISTOR,CHIP 10 1/10W 1608
R405	1-216-797-11	s	RESISTOR,CHIP 10 1/10W 1608
R408	1-216-797-11	s	RESISTOR,CHIP 10 1/10W 1608
R409	1-216-797-11	s	RESISTOR,CHIP 10 1/10W 1608
R411	1-216-829-11	s	RESISTOR,CHIP 4.7K 1/10W(1608)
R412	1-216-815-11	s	RESISTOR,CHIP 330 1/10W 1608
R413	1-216-821-11	s	RESISTOR,CHIP 1.0K 1/10W(1608)
R414	1-216-801-11	s	RESISTOR,CHIP 22 1/10W (1608)
R415	1-216-801-11	s	RESISTOR,CHIP 22 1/10W (1608)
R416	1-216-801-11	s	RESISTOR,CHIP 22 1/10W (1608)
R417	1-216-821-11	s	RESISTOR,CHIP 1.0K 1/10W(1608)
R418	1-216-797-11	s	RESISTOR,CHIP 10 1/10W 1608
R419	1-216-821-11	s	RESISTOR,CHIP 1.0K 1/10W(1608)
R420	1-216-801-11	s	RESISTOR,CHIP 22 1/10W (1608)
R423	1-216-801-11	s	RESISTOR,CHIP 22 1/10W (1608)
R424	1-216-797-11	s	RESISTOR,CHIP 10 1/10W 1608
R425	1-216-801-11	s	RESISTOR,CHIP 22 1/10W (1608)
R427	1-216-864-11	s	CONDUCTOR, CHIP (1608)
R428	1-216-833-11	s	RESISTOR,CHIP 10K 1/10W (1608)
R429	1-216-797-11	s	RESISTOR,CHIP 10 1/10W 1608
R430	1-216-797-11	s	RESISTOR,CHIP 10 1/10W 1608
R431	1-216-864-11	s	CONDUCTOR, CHIP (1608)
R432	1-216-797-11	s	RESISTOR,CHIP 10 1/10W 1608
R433	1-216-797-11	s	RESISTOR,CHIP 10 1/10W 1608
R501	1-216-801-11	s	RESISTOR,CHIP 22 1/10W (1608)
R502	1-216-801-11	s	RESISTOR,CHIP 22 1/10W (1608)
R503	1-216-797-11	s	RESISTOR,CHIP 10 1/10W 1608
R504	1-216-797-11	s	RESISTOR,CHIP 10 1/10W 1608
R604	1-216-864-11	s	CONDUCTOR, CHIP (1608)
R605	1-216-833-11	s	RESISTOR,CHIP 10K 1/10W (1608)
R606	1-216-801-11	s	RESISTOR,CHIP 22 1/10W (1608)
R607	1-216-801-11	s	RESISTOR,CHIP 22 1/10W (1608)
R608	1-216-801-11	s	RESISTOR,CHIP 22 1/10W (1608)
R609	1-216-801-11	s	RESISTOR,CHIP 22 1/10W (1608)
R610	1-216-801-11	s	RESISTOR,CHIP 22 1/10W (1608)
R611	1-216-864-11	s	CONDUCTOR, CHIP (1608)
R612	1-216-829-11	s	RESISTOR,CHIP 4.7K 1/10W(1608)
R616	1-216-864-11	s	CONDUCTOR, CHIP (1608)
R617	1-216-864-11	s	CONDUCTOR, CHIP (1608)
R618	1-216-821-11	s	RESISTOR,CHIP 1.0K 1/10W(1608)
R701	1-216-801-11	s	RESISTOR,CHIP 22 1/10W (1608)
R705	1-216-864-11	s	CONDUCTOR, CHIP (1608)
R706	1-216-833-11	s	RESISTOR,CHIP 10K 1/10W (1608)
R707	1-216-829-11	s	RESISTOR,CHIP 4.7K 1/10W(1608)
R708	1-216-797-11	s	RESISTOR,CHIP 10 1/10W 1608
R709	1-216-864-11	s	CONDUCTOR, CHIP (1608)
R901	1-216-815-11	s	RESISTOR,CHIP 330 1/10W 1608
R902	1-216-829-11	s	RESISTOR,CHIP 4.7K 1/10W(1608)
R905	1-216-864-11	s	CONDUCTOR, CHIP (1608)
R906	1-216-815-11	s	RESISTOR,CHIP 330 1/10W 1608

(VN-13 BOARD [SUFFIX 11] for BKMW-E2000)

Ref. No. or Q'ty	Part No.	SP	Description
R907	1-216-864-11	s	CONDUCTOR, CHIP (1608)
R908	1-216-821-11	s	RESISTOR,CHIP 1.0K 1/10W(1608)
R909	1-216-821-11	s	RESISTOR,CHIP 1.0K 1/10W(1608)
R911	1-216-864-11	s	CONDUCTOR, CHIP (1608)
R913	1-216-864-11	s	CONDUCTOR, CHIP (1608)
R915	1-216-797-11	s	RESISTOR,CHIP 10 1/10W 1608
R1001	1-216-801-11	s	RESISTOR,CHIP 22 1/10W (1608)
R1002	1-216-801-11	s	RESISTOR,CHIP 22 1/10W (1608)
R1003	1-216-801-11	s	RESISTOR,CHIP 22 1/10W (1608)
R1004	1-216-801-11	s	RESISTOR,CHIP 22 1/10W (1608)
R1005	1-216-801-11	s	RESISTOR,CHIP 22 1/10W (1608)
R1006	1-216-801-11	s	RESISTOR,CHIP 22 1/10W (1608)
R1007	1-216-801-11	s	RESISTOR,CHIP 22 1/10W (1608)
R1008	1-216-801-11	s	RESISTOR,CHIP 22 1/10W (1608)
R1009	1-216-801-11	s	RESISTOR,CHIP 22 1/10W (1608)
R1010	1-216-801-11	s	RESISTOR,CHIP 22 1/10W (1608)
R1011	1-216-864-11	s	CONDUCTOR, CHIP (1608)
R1012	1-216-864-11	s	CONDUCTOR, CHIP (1608)
R1013	1-216-801-11	s	RESISTOR,CHIP 22 1/10W (1608)
R1014	1-216-801-11	s	RESISTOR,CHIP 22 1/10W (1608)
R1015	1-216-864-11	s	CONDUCTOR, CHIP (1608)
R1016	1-216-801-11	s	RESISTOR,CHIP 22 1/10W (1608)
R1017	1-216-801-11	s	RESISTOR,CHIP 22 1/10W (1608)
R1018	1-216-801-11	s	RESISTOR,CHIP 22 1/10W (1608)
R1019	1-216-801-11	s	RESISTOR,CHIP 22 1/10W (1608)
R1020	1-216-801-11	s	RESISTOR,CHIP 22 1/10W (1608)
R1021	1-216-801-11	s	RESISTOR,CHIP 22 1/10W (1608)
R1022	1-216-801-11	s	RESISTOR,CHIP 22 1/10W (1608)
R1023	1-216-801-11	s	RESISTOR,CHIP 22 1/10W (1608)
R1024	1-216-864-11	s	CONDUCTOR, CHIP (1608)
R1025	1-216-801-11	s	RESISTOR,CHIP 22 1/10W (1608)
R1026	1-216-801-11	s	RESISTOR,CHIP 22 1/10W (1608)
R1027	1-216-864-11	s	CONDUCTOR, CHIP (1608)
R1028	1-216-801-11	s	RESISTOR,CHIP 22 1/10W (1608)
R1029	1-216-801-11	s	RESISTOR,CHIP 22 1/10W (1608)
R1030	1-216-801-11	s	RESISTOR,CHIP 22 1/10W (1608)
R1031	1-216-801-11	s	RESISTOR,CHIP 22 1/10W (1608)
R1032	1-216-801-11	s	RESISTOR,CHIP 22 1/10W (1608)
R1033	1-216-864-11	s	CONDUCTOR, CHIP (1608)
R1034	1-216-801-11	s	RESISTOR,CHIP 22 1/10W (1608)
R1035	1-216-801-11	s	RESISTOR,CHIP 22 1/10W (1608)
R1036	1-216-801-11	s	RESISTOR,CHIP 22 1/10W (1608)
R1037	1-216-801-11	s	RESISTOR,CHIP 22 1/10W (1608)
R1038	1-216-801-11	s	RESISTOR,CHIP 22 1/10W (1608)
R1039	1-216-801-11	s	RESISTOR,CHIP 22 1/10W (1608)
R1040	1-216-801-11	s	RESISTOR,CHIP 22 1/10W (1608)
R1041	1-216-801-11	s	RESISTOR,CHIP 22 1/10W (1608)
R1042	1-216-801-11	s	RESISTOR,CHIP 22 1/10W (1608)
R1043	1-216-801-11	s	RESISTOR,CHIP 22 1/10W (1608)
R1044	1-216-801-11	s	RESISTOR,CHIP 22 1/10W (1608)
R1045	1-216-801-11	s	RESISTOR,CHIP 22 1/10W (1608)
R1046	1-216-801-11	s	RESISTOR,CHIP 22 1/10W (1608)
R1047	1-216-864-11	s	CONDUCTOR, CHIP (1608)
R1048	1-216-864-11	s	CONDUCTOR, CHIP (1608)
R1102	1-216-833-11	s	RESISTOR,CHIP 10K 1/10W (1608)
R1103	1-216-801-11	s	RESISTOR,CHIP 22 1/10W (1608)
R1104	1-216-823-11	s	RESISTOR, CHIP 1.5K 1/10W
R1105	1-216-833-11	s	RESISTOR,CHIP 10K 1/10W (1608)
R1106	1-216-823-11	s	RESISTOR, CHIP 1.5K 1/10W

(VN-13 BOARD [SUFFIX 11] for BKMW-E2000)

Ref. No. or Q'ty	Part No.	SP	Description
R1108	1-218-854-11	s	RESISTOR,CHIP 2K 1/10W (1608)
R1109	1-218-823-11	s	RESISTOR,CHIP 100 1/10W (1608)
R1110	1-218-837-11	s	RESISTOR,CHIP 390 1/10W (1608)
R1111	1-216-864-11	s	CONDUCTOR, CHIP (1608)
R1112	1-216-864-11	s	CONDUCTOR, CHIP (1608)
R1113	1-216-864-11	s	CONDUCTOR, CHIP (1608)
R1114	1-216-864-11	s	CONDUCTOR, CHIP (1608)
R1115	1-216-864-11	s	CONDUCTOR, CHIP (1608)
R1116	1-216-864-11	s	CONDUCTOR, CHIP (1608)
R1117	1-216-864-11	s	CONDUCTOR, CHIP (1608)
R1118	1-216-821-11	s	RESISTOR,CHIP 1.0K 1/10W(1608)
R1119	1-216-821-11	s	RESISTOR,CHIP 1.0K 1/10W(1608)
R1120	1-216-821-11	s	RESISTOR,CHIP 1.0K 1/10W(1608)
R1121	1-216-821-11	s	RESISTOR,CHIP 1.0K 1/10W(1608)
R1122	1-216-821-11	s	RESISTOR,CHIP 1.0K 1/10W(1608)
R1123	1-216-821-11	s	RESISTOR,CHIP 1.0K 1/10W(1608)
R1124	1-216-793-11	s	RESISTOR,CHIP 4.7 1/16W 1608
R1125	1-216-793-11	s	RESISTOR,CHIP 4.7 1/16W 1608
R1126	1-211-969-11	s	RESISTOR,CHIP 10 1/10W (1608)
R1127	1-211-969-11	s	RESISTOR,CHIP 10 1/10W (1608)
R1128	1-216-793-11	s	RESISTOR,CHIP 4.7 1/16W 1608
R1129	1-216-793-11	s	RESISTOR,CHIP 4.7 1/16W 1608
R1130	1-216-793-11	s	RESISTOR,CHIP 4.7 1/16W 1608
R1131	1-216-793-11	s	RESISTOR,CHIP 4.7 1/16W 1608
R1132	1-216-793-11	s	RESISTOR,CHIP 4.7 1/16W 1608
R1133	1-216-793-11	s	RESISTOR,CHIP 4.7 1/16W 1608
R1134	1-216-793-11	s	RESISTOR,CHIP 4.7 1/16W 1608
R1135	1-216-793-11	s	RESISTOR,CHIP 4.7 1/16W 1608
R1136	1-211-981-11	s	RESISTOR,CHIP 33 1/10W (1608)
R1137	1-211-981-11	s	RESISTOR,CHIP 33 1/10W (1608)
R1138	1-216-789-11	s	RESISTOR,CHIP 2.2 1/16W(1608)
R1139	1-216-789-11	s	RESISTOR,CHIP 2.2 1/16W(1608)
R1140	1-216-789-11	s	RESISTOR,CHIP 2.2 1/16W(1608)
R1141	1-216-789-11	s	RESISTOR,CHIP 2.2 1/16W(1608)
R1142	1-216-789-11	s	RESISTOR,CHIP 2.2 1/16W(1608)
R1143	1-216-789-11	s	RESISTOR,CHIP 2.2 1/16W(1608)
R1144	1-216-789-11	s	RESISTOR,CHIP 2.2 1/16W(1608)
R1145	1-216-789-11	s	RESISTOR,CHIP 2.2 1/16W(1608)
R1146	1-211-969-11	s	RESISTOR,CHIP 10 1/10W (1608)
R1147	1-211-969-11	s	RESISTOR,CHIP 10 1/10W (1608)
R1148	1-211-969-11	s	RESISTOR,CHIP 10 1/10W (1608)
R1149	1-211-969-11	s	RESISTOR,CHIP 10 1/10W (1608)
R1150	1-211-969-11	s	RESISTOR,CHIP 10 1/10W (1608)
R1151	1-211-969-11	s	RESISTOR,CHIP 10 1/10W (1608)
R1152	1-211-969-11	s	RESISTOR,CHIP 10 1/10W (1608)
R1153	1-211-969-11	s	RESISTOR,CHIP 10 1/10W (1608)
R1158	1-216-821-11	s	RESISTOR,CHIP 1.0K 1/10W(1608)
R1159	1-216-821-11	s	RESISTOR,CHIP 1.0K 1/10W(1608)
R1160	1-216-864-11	s	CONDUCTOR, CHIP (1608)
R1161	1-216-789-11	s	RESISTOR,CHIP 2.2 1/16W(1608)
R1162	1-216-789-11	s	RESISTOR,CHIP 2.2 1/16W(1608)
R1163	1-211-981-11	s	RESISTOR,CHIP 33 1/10W (1608)
R1164	1-211-981-11	s	RESISTOR,CHIP 33 1/10W (1608)
R1165	1-211-981-11	s	RESISTOR,CHIP 33 1/10W (1608)
R1166	1-211-981-11	s	RESISTOR,CHIP 33 1/10W (1608)
R1167	1-211-981-11	s	RESISTOR,CHIP 33 1/10W (1608)
R1168	1-211-981-11	s	RESISTOR,CHIP 33 1/10W (1608)
R1169	1-211-981-11	s	RESISTOR,CHIP 33 1/10W (1608)
R1170	1-211-981-11	s	RESISTOR,CHIP 33 1/10W (1608)

(VN-13 BOARD [SUFFIX 11] for BKMW-E2000)

Ref. No. or Q'ty	Part No.	SP	Description
R1171	1-216-801-11	s	RESISTOR,CHIP 22 1/10W (1608)
R1172	1-216-801-11	s	RESISTOR,CHIP 22 1/10W (1608)
R1173	1-216-801-11	s	RESISTOR,CHIP 22 1/10W (1608)
RB1	1-233-414-11	s	RESISTOR,CHIP NETWORK 4.7K
RB2	1-233-414-11	s	RESISTOR,CHIP NETWORK 4.7K
RB3	1-233-414-11	s	RESISTOR,CHIP NETWORK 4.7K
RB4	1-233-414-11	s	RESISTOR,CHIP NETWORK 4.7K
RB5	1-233-414-11	s	RESISTOR,CHIP NETWORK 4.7K
RB6	1-233-414-11	s	RESISTOR,CHIP NETWORK 4.7K
RB7	1-233-414-11	s	RESISTOR,CHIP NETWORK 4.7K
RB8	1-233-414-11	s	RESISTOR,CHIP NETWORK 4.7K
RB9	1-233-414-11	s	RESISTOR,CHIP NETWORK 4.7K
RB10	1-233-414-11	s	RESISTOR,CHIP NETWORK 4.7K
RB11	1-233-414-11	s	RESISTOR,CHIP NETWORK 4.7K
RB12	1-233-414-11	s	RESISTOR,CHIP NETWORK 4.7K
RB13	1-233-414-11	s	RESISTOR,CHIP NETWORK 4.7K
RB14	1-233-414-11	s	RESISTOR,CHIP NETWORK 4.7K
RB15	1-233-414-11	s	RESISTOR,CHIP NETWORK 4.7K
RB16	1-233-414-11	s	RESISTOR,CHIP NETWORK 4.7K
RB17	1-233-575-11	s	RES, CHIP NETWORK 22
RB18	1-233-575-11	s	RES, CHIP NETWORK 22
RB19	1-233-575-11	s	RES, CHIP NETWORK 22
RB20	1-233-575-11	s	RES, CHIP NETWORK 22
RB21	1-233-575-11	s	RES, CHIP NETWORK 22
RB22	1-233-575-11	s	RES, CHIP NETWORK 22
RB23	1-233-575-11	s	RES, CHIP NETWORK 22
RB24	1-233-575-11	s	RES, CHIP NETWORK 22
RB25	1-233-575-11	s	RES, CHIP NETWORK 22
RB26	1-233-414-11	s	RESISTOR,CHIP NETWORK 4.7K
RB27	1-233-414-11	s	RESISTOR,CHIP NETWORK 4.7K
RB28	1-233-575-11	s	RES, CHIP NETWORK 22
RB29	1-233-575-11	s	RES, CHIP NETWORK 22
RB30	1-233-575-11	s	RES, CHIP NETWORK 22
RB31	1-233-575-11	s	RES, CHIP NETWORK 22
RB32	1-233-575-11	s	RES, CHIP NETWORK 22
RB33	1-233-414-11	s	RESISTOR,CHIP NETWORK 4.7K
RB34	1-233-414-11	s	RESISTOR,CHIP NETWORK 4.7K
RB35	1-233-414-11	s	RESISTOR,CHIP NETWORK 4.7K
RB36	1-233-414-11	s	RESISTOR,CHIP NETWORK 4.7K
RB37	1-233-414-11	s	RESISTOR,CHIP NETWORK 4.7K
RB38	1-233-414-11	s	RESISTOR,CHIP NETWORK 4.7K
RB39	1-233-575-11	s	RES, CHIP NETWORK 22
RB40	1-233-414-11	s	RESISTOR,CHIP NETWORK 4.7K
RB50	1-233-810-21	s	RES, NETWORK 100K (3216)
RB102	1-233-810-21	s	RES, NETWORK 100K (3216)
RB103	1-233-414-11	s	RESISTOR,CHIP NETWORK 4.7K
RB104	1-233-810-21	s	RES, NETWORK 100K (3216)
RB105	1-233-414-11	s	RESISTOR,CHIP NETWORK 4.7K
RB106	1-233-576-11	s	RESISTOR,CHIP NETWORK 100
RB107	1-233-576-11	s	RESISTOR,CHIP NETWORK 100
RB108	1-233-414-11	s	RESISTOR,CHIP NETWORK 4.7K
RB109	1-233-414-11	s	RESISTOR,CHIP NETWORK 4.7K
RB110	1-233-414-11	s	RESISTOR,CHIP NETWORK 4.7K
RB111	1-233-414-11	s	RESISTOR,CHIP NETWORK 4.7K
RB112	1-233-414-11	s	RESISTOR,CHIP NETWORK 4.7K
RB113	1-233-414-11	s	RESISTOR,CHIP NETWORK 4.7K
RB114	1-233-575-11	s	RES, CHIP NETWORK 22
RB115	1-233-575-11	s	RES, CHIP NETWORK 22

(VN-13 BOARD [SUFFIX 11] for BKMW-E2000)

Ref. No. or Q'ty	Part No.	SP	Description	
RB116	1-233-575-11	s	RES, CHIP NETWORK 22	
RB117	1-233-575-11	s	RES, CHIP NETWORK 22	
RB118	1-233-575-11	s	RES, CHIP NETWORK 22	
RB119	1-233-575-11	s	RES, CHIP NETWORK 22	
RB120	1-233-575-11	s	RES, CHIP NETWORK 22	
RB121	1-233-575-11	s	RES, CHIP NETWORK 22	
RB122	1-233-810-21	s	RES, NETWORK 100K	(3216)
RB123	1-233-810-21	s	RES, NETWORK 100K	(3216)
RB124	1-233-575-11	s	RES, CHIP NETWORK 22	
RB125	1-233-575-11	s	RES, CHIP NETWORK 22	
RB126	1-233-810-21	s	RES, NETWORK 100K	(3216)
RB127	1-233-810-21	s	RES, NETWORK 100K	(3216)
RB128	1-233-412-11	s	RESISTOR,CHIP NETWORK 1K	
RB129	1-233-576-11	s	RESISTOR,CHIP NETWORK 100	
RB401	1-233-412-11	s	RESISTOR,CHIP NETWORK 1K	
RB402	1-233-412-11	s	RESISTOR,CHIP NETWORK 1K	
RB403	1-233-412-11	s	RESISTOR,CHIP NETWORK 1K	
RB404	1-233-412-11	s	RESISTOR,CHIP NETWORK 1K	
RB406	1-233-412-11	s	RESISTOR,CHIP NETWORK 1K	
RB407	1-233-412-11	s	RESISTOR,CHIP NETWORK 1K	
RB408	1-233-412-11	s	RESISTOR,CHIP NETWORK 1K	
RB410	1-233-574-11	s	RESISTOR,CHIP NETWORK 10	
RB411	1-233-574-11	s	RESISTOR,CHIP NETWORK 10	
RB412	1-233-574-11	s	RESISTOR,CHIP NETWORK 10	
RB413	1-233-574-11	s	RESISTOR,CHIP NETWORK 10	
RB414	1-233-574-11	s	RESISTOR,CHIP NETWORK 10	
RB415	1-233-574-11	s	RESISTOR,CHIP NETWORK 10	
RB416	1-233-574-11	s	RESISTOR,CHIP NETWORK 10	
RB417	1-233-574-11	s	RESISTOR,CHIP NETWORK 10	
RB418	1-233-574-11	s	RESISTOR,CHIP NETWORK 10	
RB419	1-233-574-11	s	RESISTOR,CHIP NETWORK 10	
RB420	1-233-574-11	s	RESISTOR,CHIP NETWORK 10	
RB421	1-233-574-11	s	RESISTOR,CHIP NETWORK 10	
RB422	1-233-574-11	s	RESISTOR,CHIP NETWORK 10	
RB423	1-233-574-11	s	RESISTOR,CHIP NETWORK 10	
RB424	1-233-574-11	s	RESISTOR,CHIP NETWORK 10	
RB425	1-233-574-11	s	RESISTOR,CHIP NETWORK 10	
RB426	1-233-412-11	s	RESISTOR,CHIP NETWORK 1K	
RB427	1-233-574-11	s	RESISTOR,CHIP NETWORK 10	
RB428	1-233-574-11	s	RESISTOR,CHIP NETWORK 10	
RB429	1-233-574-11	s	RESISTOR,CHIP NETWORK 10	
RB430	1-233-574-11	s	RESISTOR,CHIP NETWORK 10	
RB431	1-233-574-11	s	RESISTOR,CHIP NETWORK 10	
RB432	1-233-574-11	s	RESISTOR,CHIP NETWORK 10	
RB433	1-233-574-11	s	RESISTOR,CHIP NETWORK 10	
RB434	1-233-574-11	s	RESISTOR,CHIP NETWORK 10	
RB435	1-233-574-11	s	RESISTOR,CHIP NETWORK 10	
RB436	1-233-574-11	s	RESISTOR,CHIP NETWORK 10	
RB437	1-233-574-11	s	RESISTOR,CHIP NETWORK 10	
RB438	1-233-414-11	s	RESISTOR,CHIP NETWORK 4.7K	
RB439	1-233-574-11	s	RESISTOR,CHIP NETWORK 10	
RB441	1-233-574-11	s	RESISTOR,CHIP NETWORK 10	
RB444	1-236-908-11	s	RESISTOR,NETWORK 10K (3216)	
RB445	1-233-574-11	s	RESISTOR,CHIP NETWORK 10	
RB446	1-233-574-11	s	RESISTOR,CHIP NETWORK 10	
RB501	1-236-908-11	s	RESISTOR,NETWORK 10K (3216)	
RB502	1-236-908-11	s	RESISTOR,NETWORK 10K (3216)	
RB503	1-233-574-11	s	RESISTOR,CHIP NETWORK 10	
RB504	1-233-574-11	s	RESISTOR,CHIP NETWORK 10	

(VN-13 BOARD [SUFFIX 11] for BKMW-E2000)

Ref. No. or Q'ty	Part No.	SP	Description	
RB505	1-233-574-11	s	RESISTOR,CHIP NETWORK 10	
RB506	1-233-574-11	s	RESISTOR,CHIP NETWORK 10	
RB507	1-233-574-11	s	RESISTOR,CHIP NETWORK 10	
RB508	1-233-574-11	s	RESISTOR,CHIP NETWORK 10	
RB509	1-233-574-11	s	RESISTOR,CHIP NETWORK 10	
RB510	1-233-574-11	s	RESISTOR,CHIP NETWORK 10	
RB511	1-233-574-11	s	RESISTOR,CHIP NETWORK 10	
RB512	1-233-574-11	s	RESISTOR,CHIP NETWORK 10	
RB513	1-233-574-11	s	RESISTOR,CHIP NETWORK 10	
RB514	1-233-574-11	s	RESISTOR,CHIP NETWORK 10	
RB515	1-233-574-11	s	RESISTOR,CHIP NETWORK 10	
RB701	1-233-575-11	s	RES, CHIP NETWORK 22	
RB702	1-233-575-11	s	RES, CHIP NETWORK 22	
RB703	1-233-575-11	s	RES, CHIP NETWORK 22	
RB708	1-233-575-11	s	RES, CHIP NETWORK 22	
RB709	1-233-810-21	s	RES, NETWORK 100K	(3216)
RB710	1-233-575-11	s	RES, CHIP NETWORK 22	
RB711	1-233-810-21	s	RES, NETWORK 100K	(3216)
RB713	1-233-575-11	s	RES, CHIP NETWORK 22	
RB714	1-233-575-11	s	RES, CHIP NETWORK 22	
RB715	1-233-575-11	s	RES, CHIP NETWORK 22	
RB716	1-233-575-11	s	RES, CHIP NETWORK 22	
RB717	1-233-575-11	s	RES, CHIP NETWORK 22	
RB718	1-233-575-11	s	RES, CHIP NETWORK 22	
RB719	1-233-575-11	s	RES, CHIP NETWORK 22	
RB720	1-233-575-11	s	RES, CHIP NETWORK 22	
RB721	1-233-575-11	s	RES, CHIP NETWORK 22	
RB722	1-233-575-11	s	RES, CHIP NETWORK 22	
RB723	1-233-575-11	s	RES, CHIP NETWORK 22	
RB724	1-233-575-11	s	RES, CHIP NETWORK 22	
RB725	1-233-575-11	s	RES, CHIP NETWORK 22	
RB726	1-233-575-11	s	RES, CHIP NETWORK 22	
RB727	1-233-575-11	s	RES, CHIP NETWORK 22	
RB801	1-233-575-11	s	RES, CHIP NETWORK 22	
RB802	1-233-575-11	s	RES, CHIP NETWORK 22	
RB803	1-233-575-11	s	RES, CHIP NETWORK 22	
RB804	1-233-575-11	s	RES, CHIP NETWORK 22	
RB805	1-233-575-11	s	RES, CHIP NETWORK 22	
RB806	1-233-575-11	s	RES, CHIP NETWORK 22	
RB807	1-233-575-11	s	RES, CHIP NETWORK 22	
RB808	1-233-575-11	s	RES, CHIP NETWORK 22	
RB809	1-233-575-11	s	RES, CHIP NETWORK 22	
RB810	1-233-575-11	s	RES, CHIP NETWORK 22	
RB811	1-233-575-11	s	RES, CHIP NETWORK 22	
RB812	1-233-575-11	s	RES, CHIP NETWORK 22	
RB813	1-233-575-11	s	RES, CHIP NETWORK 22	
RB814	1-233-575-11	s	RES, CHIP NETWORK 22	
RB815	1-233-575-11	s	RES, CHIP NETWORK 22	
RB816	1-233-575-11	s	RES, CHIP NETWORK 22	
RB817	1-233-575-11	s	RES, CHIP NETWORK 22	
RB818	1-233-575-11	s	RES, CHIP NETWORK 22	
RB901	1-233-414-11	s	RESISTOR,CHIP NETWORK 4.7K	
RB1101	1-233-575-11	s	RES, CHIP NETWORK 22	
RB1102	1-233-575-11	s	RES, CHIP NETWORK 22	
RB1103	1-233-575-11	s	RES, CHIP NETWORK 22	
RB1104	1-233-575-11	s	RES, CHIP NETWORK 22	
RB1105	1-233-575-11	s	RES, CHIP NETWORK 22	
RB1106	1-233-575-11	s	RES, CHIP NETWORK 22	
RB1107	1-233-575-11	s	RES, CHIP NETWORK 22	

(VN-13 BOARD [SUFFIX 11] for BKMW-E2000)

Ref. No. or Q'ty	Part No.	SP	Description
S101	1-692-271-31	s	SWITCH, SLIDE
S102	1-692-881-41	s	SWITCH, SLIDE
S103	1-572-473-11	s	SWITCH, TACTILE
S104	1-572-473-11	s	SWITCH, TACTILE
X101	1-795-176-21	s	OSCILLATOR, CRYSTAL
X601	1-795-176-21	s	OSCILLATOR, CRYSTAL
X1101	1-781-518-21	s	VIBRATOR, CRYSTAL

VN-13 BOARD [SUFFIX 12] for BKMW-E2000

[Lot No. 451 - 484]

Ref. No. or Q'ty	Part No.	SP	Description
1pc	A-8345-968-B	s	MOUNTED CIRCUIT BOARD, VN-13
6pcs	7-682-902-11	s	SCREW +PWH 2.6X5
1pc	3-179-084-11	s	LEVER (R), C BOARD
1pc	3-179-085-11	s	LEVER (L), C BOARD
C1	1-107-826-11	s	CAPACITOR,CHIP CERAMIC 0.1MF
C2	1-107-826-11	s	CAPACITOR,CHIP CERAMIC 0.1MF
C4	1-107-826-11	s	CAPACITOR,CHIP CERAMIC 0.1MF
C6	1-107-826-11	s	CAPACITOR,CHIP CERAMIC 0.1MF
C7	1-107-826-11	s	CAPACITOR,CHIP CERAMIC 0.1MF
C8	1-107-826-11	s	CAPACITOR,CHIP CERAMIC 0.1MF
C9	1-107-826-11	s	CAPACITOR,CHIP CERAMIC 0.1MF
C10	1-107-826-11	s	CAPACITOR,CHIP CERAMIC 0.1MF
C11	1-107-826-11	s	CAPACITOR,CHIP CERAMIC 0.1MF
C12	1-107-826-11	s	CAPACITOR,CHIP CERAMIC 0.1MF
C13	1-107-826-11	s	CAPACITOR,CHIP CERAMIC 0.1MF
C14	1-107-826-11	s	CAPACITOR,CHIP CERAMIC 0.1MF
C15	1-107-826-11	s	CAPACITOR,CHIP CERAMIC 0.1MF
C16	1-127-692-11	s	CAP, CHIP CERAMIC 10MF B 3216
C18	1-107-826-11	s	CAPACITOR,CHIP CERAMIC 0.1MF
C19	1-107-826-11	s	CAPACITOR,CHIP CERAMIC 0.1MF
C20	1-107-826-11	s	CAPACITOR,CHIP CERAMIC 0.1MF
C21	1-107-826-11	s	CAPACITOR,CHIP CERAMIC 0.1MF
C22	1-107-826-11	s	CAPACITOR,CHIP CERAMIC 0.1MF
C23	1-107-826-11	s	CAPACITOR,CHIP CERAMIC 0.1MF
C24	1-107-826-11	s	CAPACITOR,CHIP CERAMIC 0.1MF
C25	1-107-826-11	s	CAPACITOR,CHIP CERAMIC 0.1MF
C26	1-107-826-11	s	CAPACITOR,CHIP CERAMIC 0.1MF
C27	1-107-826-11	s	CAPACITOR,CHIP CERAMIC 0.1MF
C28	1-107-826-11	s	CAPACITOR,CHIP CERAMIC 0.1MF
C29	1-107-826-11	s	CAPACITOR,CHIP CERAMIC 0.1MF
C30	1-107-826-11	s	CAPACITOR,CHIP CERAMIC 0.1MF
C31	1-127-692-11	s	CAP, CHIP CERAMIC 10MF B 3216
C32	1-107-826-11	s	CAPACITOR,CHIP CERAMIC 0.1MF
C33	1-107-826-11	s	CAPACITOR,CHIP CERAMIC 0.1MF
C34	1-107-826-11	s	CAPACITOR,CHIP CERAMIC 0.1MF
C35	1-107-826-11	s	CAPACITOR,CHIP CERAMIC 0.1MF
C38	1-107-826-11	s	CAPACITOR,CHIP CERAMIC 0.1MF
C40	1-127-692-11	s	CAP, CHIP CERAMIC 10MF B 3216
C41	1-107-826-11	s	CAPACITOR,CHIP CERAMIC 0.1MF
C42	1-107-826-11	s	CAPACITOR,CHIP CERAMIC 0.1MF
C43	1-107-826-11	s	CAPACITOR,CHIP CERAMIC 0.1MF
C44	1-107-826-11	s	CAPACITOR,CHIP CERAMIC 0.1MF
C45	1-107-826-11	s	CAPACITOR,CHIP CERAMIC 0.1MF
C46	1-107-826-11	s	CAPACITOR,CHIP CERAMIC 0.1MF
C47	1-107-826-11	s	CAPACITOR,CHIP CERAMIC 0.1MF
C48	1-107-826-11	s	CAPACITOR,CHIP CERAMIC 0.1MF
C101	1-107-826-11	s	CAPACITOR,CHIP CERAMIC 0.1MF
C102	1-162-927-11	s	CAPACITOR,CERAMIC 100PF/50V CH
C103	1-162-927-11	s	CAPACITOR,CERAMIC 100PF/50V CH
C104	1-127-692-11	s	CAP, CHIP CERAMIC 10MF B 3216
C105	1-107-826-11	s	CAPACITOR,CHIP CERAMIC 0.1MF
C106	1-107-826-11	s	CAPACITOR,CHIP CERAMIC 0.1MF
C107	1-107-826-11	s	CAPACITOR,CHIP CERAMIC 0.1MF
C108	1-107-826-11	s	CAPACITOR,CHIP CERAMIC 0.1MF
C109	1-107-826-11	s	CAPACITOR,CHIP CERAMIC 0.1MF
C110	1-107-826-11	s	CAPACITOR,CHIP CERAMIC 0.1MF
C111	1-107-826-11	s	CAPACITOR,CHIP CERAMIC 0.1MF

(VN-13 BOARD [SUFFIX 12] for BKMW-E2000)

Ref. No. or Q'ty	Part No.	SP	Description
C112	1-107-826-11	s	CAPACITOR,CHIP CERAMIC 0.1MF
C113	1-107-826-11	s	CAPACITOR,CHIP CERAMIC 0.1MF
C114	1-107-826-11	s	CAPACITOR,CHIP CERAMIC 0.1MF
C115	1-107-826-11	s	CAPACITOR,CHIP CERAMIC 0.1MF
C117	1-107-826-11	s	CAPACITOR,CHIP CERAMIC 0.1MF
C118	1-107-826-11	s	CAPACITOR,CHIP CERAMIC 0.1MF
C119	1-107-826-11	s	CAPACITOR,CHIP CERAMIC 0.1MF
C120	1-107-826-11	s	CAPACITOR,CHIP CERAMIC 0.1MF
C121	1-107-826-11	s	CAPACITOR,CHIP CERAMIC 0.1MF
C301	1-131-661-11	s	CAPACITOR,ELECT 100MF/10V CHIP
C302	1-107-826-11	s	CAPACITOR,CHIP CERAMIC 0.1MF
C303	1-131-661-11	s	CAPACITOR,ELECT 100MF/10V CHIP
C304	1-131-661-11	s	CAPACITOR,ELECT 100MF/10V CHIP
C305	1-107-826-11	s	CAPACITOR,CHIP CERAMIC 0.1MF
C306	1-107-826-11	s	CAPACITOR,CHIP CERAMIC 0.1MF
C307	1-165-947-91	s	CAP, CHIP CERAMIC 2.2MF (3225)
C308	1-126-395-11	s	CAPACITOR,ELECT 22MF/16V(CHIP)
C309	1-165-947-91	s	CAP, CHIP CERAMIC 2.2MF (3225)
C310	1-107-826-11	s	CAPACITOR,CHIP CERAMIC 0.1MF
C311	1-131-661-11	s	CAPACITOR,ELECT 100MF/10V CHIP
C312	1-162-964-11	s	CAPACITOR,CERAMIC 1000PF/50V B
C313	1-162-964-11	s	CAPACITOR,CERAMIC 1000PF/50V B
C314	1-107-826-11	s	CAPACITOR,CHIP CERAMIC 0.1MF
C315	1-107-826-11	s	CAPACITOR,CHIP CERAMIC 0.1MF
C316	1-164-315-11	s	CAPACITOR,CERAMIC 470PF/50V CH
C317	1-164-315-11	s	CAPACITOR,CERAMIC 470PF/50V CH
C318	1-107-826-11	s	CAPACITOR,CHIP CERAMIC 0.1MF
C319	1-107-826-11	s	CAPACITOR,CHIP CERAMIC 0.1MF
C320	1-165-811-11	s	CAPACITOR CHIP CERAMIC 22MF B
C321	1-165-811-11	s	CAPACITOR CHIP CERAMIC 22MF B
C322	1-107-826-11	s	CAPACITOR,CHIP CERAMIC 0.1MF
C323	1-107-826-11	s	CAPACITOR,CHIP CERAMIC 0.1MF
C324	1-107-826-11	s	CAPACITOR,CHIP CERAMIC 0.1MF
C325	1-107-826-11	s	CAPACITOR,CHIP CERAMIC 0.1MF
C326	1-131-661-11	s	CAPACITOR,ELECT 100MF/10V CHIP
C327	1-131-661-11	s	CAPACITOR,ELECT 100MF/10V CHIP
C328	1-162-919-11	s	CAPACITOR,CERAMIC 22PF/50V CH
C329	1-162-919-11	s	CAPACITOR,CERAMIC 22PF/50V CH
C331	1-162-927-11	s	CAPACITOR,CERAMIC 100PF/50V CH
C336	1-107-826-11	s	CAPACITOR,CHIP CERAMIC 0.1MF
C340	1-107-826-11	s	CAPACITOR,CHIP CERAMIC 0.1MF
C401	1-107-826-11	s	CAPACITOR,CHIP CERAMIC 0.1MF
C402	1-107-826-11	s	CAPACITOR,CHIP CERAMIC 0.1MF
C403	1-107-826-11	s	CAPACITOR,CHIP CERAMIC 0.1MF
C404	1-107-826-11	s	CAPACITOR,CHIP CERAMIC 0.1MF
C405	1-107-826-11	s	CAPACITOR,CHIP CERAMIC 0.1MF
C406	1-107-826-11	s	CAPACITOR,CHIP CERAMIC 0.1MF
C407	1-107-826-11	s	CAPACITOR,CHIP CERAMIC 0.1MF
C408	1-107-826-11	s	CAPACITOR,CHIP CERAMIC 0.1MF
C409	1-107-826-11	s	CAPACITOR,CHIP CERAMIC 0.1MF
C410	1-107-826-11	s	CAPACITOR,CHIP CERAMIC 0.1MF
C411	1-107-826-11	s	CAPACITOR,CHIP CERAMIC 0.1MF
C412	1-107-826-11	s	CAPACITOR,CHIP CERAMIC 0.1MF
C413	1-107-826-11	s	CAPACITOR,CHIP CERAMIC 0.1MF
C414	1-107-826-11	s	CAPACITOR,CHIP CERAMIC 0.1MF
C415	1-127-692-11	s	CAP, CHIP CERAMIC 10MF B 3216
C416	1-107-826-11	s	CAPACITOR,CHIP CERAMIC 0.1MF
C417	1-107-826-11	s	CAPACITOR,CHIP CERAMIC 0.1MF
C418	1-107-826-11	s	CAPACITOR,CHIP CERAMIC 0.1MF

(VN-13 BOARD [SUFFIX 12] for BKMW-E2000)

Ref. No. or Q'ty	Part No.	SP	Description
C419	1-107-826-11	s	CAPACITOR,CHIP CERAMIC 0.1MF
C420	1-107-826-11	s	CAPACITOR,CHIP CERAMIC 0.1MF
C421	1-107-826-11	s	CAPACITOR,CHIP CERAMIC 0.1MF
C422	1-107-826-11	s	CAPACITOR,CHIP CERAMIC 0.1MF
C423	1-107-826-11	s	CAPACITOR,CHIP CERAMIC 0.1MF
C424	1-107-826-11	s	CAPACITOR,CHIP CERAMIC 0.1MF
C426	1-107-826-11	s	CAPACITOR,CHIP CERAMIC 0.1MF
C427	1-127-692-11	s	CAP, CHIP CERAMIC 10MF B 3216
C428	1-107-826-11	s	CAPACITOR,CHIP CERAMIC 0.1MF
C429	1-127-692-11	s	CAP, CHIP CERAMIC 10MF B 3216
C430	1-107-826-11	s	CAPACITOR,CHIP CERAMIC 0.1MF
C431	1-107-826-11	s	CAPACITOR,CHIP CERAMIC 0.1MF
C432	1-107-826-11	s	CAPACITOR,CHIP CERAMIC 0.1MF
C433	1-107-826-11	s	CAPACITOR,CHIP CERAMIC 0.1MF
C434	1-107-826-11	s	CAPACITOR,CHIP CERAMIC 0.1MF
C435	1-107-826-11	s	CAPACITOR,CHIP CERAMIC 0.1MF
C436	1-107-826-11	s	CAPACITOR,CHIP CERAMIC 0.1MF
C437	1-107-826-11	s	CAPACITOR,CHIP CERAMIC 0.1MF
C438	1-107-826-11	s	CAPACITOR,CHIP CERAMIC 0.1MF
C439	1-107-826-11	s	CAPACITOR,CHIP CERAMIC 0.1MF
C440	1-107-826-11	s	CAPACITOR,CHIP CERAMIC 0.1MF
C441	1-107-826-11	s	CAPACITOR,CHIP CERAMIC 0.1MF
C442	1-107-826-11	s	CAPACITOR,CHIP CERAMIC 0.1MF
C447	1-107-826-11	s	CAPACITOR,CHIP CERAMIC 0.1MF
C601	1-107-826-11	s	CAPACITOR,CHIP CERAMIC 0.1MF
C602	1-107-826-11	s	CAPACITOR,CHIP CERAMIC 0.1MF
C603	1-107-826-11	s	CAPACITOR,CHIP CERAMIC 0.1MF
C604	1-107-826-11	s	CAPACITOR,CHIP CERAMIC 0.1MF
C605	1-107-826-11	s	CAPACITOR,CHIP CERAMIC 0.1MF
C606	1-107-826-11	s	CAPACITOR,CHIP CERAMIC 0.1MF
C607	1-107-826-11	s	CAPACITOR,CHIP CERAMIC 0.1MF
C608	1-107-826-11	s	CAPACITOR,CHIP CERAMIC 0.1MF
C609	1-107-826-11	s	CAPACITOR,CHIP CERAMIC 0.1MF
C610	1-107-826-11	s	CAPACITOR,CHIP CERAMIC 0.1MF
C611	1-107-826-11	s	CAPACITOR,CHIP CERAMIC 0.1MF
C612	1-107-826-11	s	CAPACITOR,CHIP CERAMIC 0.1MF
C613	1-107-826-11	s	CAPACITOR,CHIP CERAMIC 0.1MF
C614	1-107-826-11	s	CAPACITOR,CHIP CERAMIC 0.1MF
C615	1-107-826-11	s	CAPACITOR,CHIP CERAMIC 0.1MF
C616	1-107-826-11	s	CAPACITOR,CHIP CERAMIC 0.1MF
C617	1-107-826-11	s	CAPACITOR,CHIP CERAMIC 0.1MF
C618	1-107-826-11	s	CAPACITOR,CHIP CERAMIC 0.1MF
C619	1-107-826-11	s	CAPACITOR,CHIP CERAMIC 0.1MF
C620	1-107-826-11	s	CAPACITOR,CHIP CERAMIC 0.1MF
C621	1-107-826-11	s	CAPACITOR,CHIP CERAMIC 0.1MF
C622	1-107-826-11	s	CAPACITOR,CHIP CERAMIC 0.1MF
C623	1-107-826-11	s	CAPACITOR,CHIP CERAMIC 0.1MF
C624	1-107-826-11	s	CAPACITOR,CHIP CERAMIC 0.1MF
C625	1-107-826-11	s	CAPACITOR,CHIP CERAMIC 0.1MF
C626	1-107-826-11	s	CAPACITOR,CHIP CERAMIC 0.1MF
C627	1-107-826-11	s	CAPACITOR,CHIP CERAMIC 0.1MF
C628	1-107-826-11	s	CAPACITOR,CHIP CERAMIC 0.1MF
C629	1-107-826-11	s	CAPACITOR,CHIP CERAMIC 0.1MF
C630	1-107-826-11	s	CAPACITOR,CHIP CERAMIC 0.1MF
C631	1-107-826-11	s	CAPACITOR,CHIP CERAMIC 0.1MF
C632	1-107-826-11	s	CAPACITOR,CHIP CERAMIC 0.1MF
C633	1-107-826-11	s	CAPACITOR,CHIP CERAMIC 0.1MF
C634	1-107-826-11	s	CAPACITOR,CHIP CERAMIC 0.1MF
C635	1-107-826-11	s	CAPACITOR,CHIP CERAMIC 0.1MF

(VN-13 BOARD [SUFFIX 12] for BKMW-E2000)

Ref. No. or Q'ty	Part No.	SP	Description
C636	1-107-826-11	s	CAPACITOR,CHIP CERAMIC 0.1MF
C637	1-107-826-11	s	CAPACITOR,CHIP CERAMIC 0.1MF
C638	1-107-826-11	s	CAPACITOR,CHIP CERAMIC 0.1MF
C639	1-107-826-11	s	CAPACITOR,CHIP CERAMIC 0.1MF
C640	1-107-826-11	s	CAPACITOR,CHIP CERAMIC 0.1MF
C641	1-107-826-11	s	CAPACITOR,CHIP CERAMIC 0.1MF
C642	1-107-826-11	s	CAPACITOR,CHIP CERAMIC 0.1MF
C643	1-107-826-11	s	CAPACITOR,CHIP CERAMIC 0.1MF
C644	1-107-826-11	s	CAPACITOR,CHIP CERAMIC 0.1MF
C651	1-107-826-11	s	CAPACITOR,CHIP CERAMIC 0.1MF
C652	1-107-826-11	s	CAPACITOR,CHIP CERAMIC 0.1MF
C653	1-165-989-11	s	CAPACITOR, CERAMIC 10MF (2012)
C654	1-107-826-11	s	CAPACITOR,CHIP CERAMIC 0.1MF
C655	1-107-826-11	s	CAPACITOR,CHIP CERAMIC 0.1MF
C656	1-107-826-11	s	CAPACITOR,CHIP CERAMIC 0.1MF
C657	1-107-826-11	s	CAPACITOR,CHIP CERAMIC 0.1MF
C658	1-107-826-11	s	CAPACITOR,CHIP CERAMIC 0.1MF
C659	1-107-826-11	s	CAPACITOR,CHIP CERAMIC 0.1MF
C662	1-107-826-11	s	CAPACITOR,CHIP CERAMIC 0.1MF
C663	1-107-826-11	s	CAPACITOR,CHIP CERAMIC 0.1MF
C664	1-107-826-11	s	CAPACITOR,CHIP CERAMIC 0.1MF
C665	1-107-826-11	s	CAPACITOR,CHIP CERAMIC 0.1MF
C666	1-107-826-11	s	CAPACITOR,CHIP CERAMIC 0.1MF
C667	1-107-826-11	s	CAPACITOR,CHIP CERAMIC 0.1MF
C668	1-107-826-11	s	CAPACITOR,CHIP CERAMIC 0.1MF
C669	1-107-826-11	s	CAPACITOR,CHIP CERAMIC 0.1MF
C670	1-107-826-11	s	CAPACITOR,CHIP CERAMIC 0.1MF
C671	1-107-826-11	s	CAPACITOR,CHIP CERAMIC 0.1MF
C672	1-107-826-11	s	CAPACITOR,CHIP CERAMIC 0.1MF
C673	1-107-826-11	s	CAPACITOR,CHIP CERAMIC 0.1MF
C674	1-107-826-11	s	CAPACITOR,CHIP CERAMIC 0.1MF
C675	1-107-826-11	s	CAPACITOR,CHIP CERAMIC 0.1MF
C676	1-107-826-11	s	CAPACITOR,CHIP CERAMIC 0.1MF
C677	1-107-826-11	s	CAPACITOR,CHIP CERAMIC 0.1MF
C678	1-107-826-11	s	CAPACITOR,CHIP CERAMIC 0.1MF
C679	1-107-826-11	s	CAPACITOR,CHIP CERAMIC 0.1MF
C680	1-107-826-11	s	CAPACITOR,CHIP CERAMIC 0.1MF
C681	1-107-826-11	s	CAPACITOR,CHIP CERAMIC 0.1MF
C682	1-107-826-11	s	CAPACITOR,CHIP CERAMIC 0.1MF
C683	1-107-826-11	s	CAPACITOR,CHIP CERAMIC 0.1MF
C684	1-107-826-11	s	CAPACITOR,CHIP CERAMIC 0.1MF
C690	1-107-826-11	s	CAPACITOR,CHIP CERAMIC 0.1MF
C691	1-107-826-11	s	CAPACITOR,CHIP CERAMIC 0.1MF
C692	1-107-826-11	s	CAPACITOR,CHIP CERAMIC 0.1MF
C693	1-107-826-11	s	CAPACITOR,CHIP CERAMIC 0.1MF
C694	1-107-826-11	s	CAPACITOR,CHIP CERAMIC 0.1MF
C695	1-107-826-11	s	CAPACITOR,CHIP CERAMIC 0.1MF
C696	1-107-826-11	s	CAPACITOR,CHIP CERAMIC 0.1MF
C697	1-107-826-11	s	CAPACITOR,CHIP CERAMIC 0.1MF
C698	1-107-826-11	s	CAPACITOR,CHIP CERAMIC 0.1MF
C699	1-107-826-11	s	CAPACITOR,CHIP CERAMIC 0.1MF
C700	1-107-826-11	s	CAPACITOR,CHIP CERAMIC 0.1MF
C703	1-164-378-11	s	CAPACITOR CERAMIC 30PF/50V CH
C704	1-164-378-11	s	CAPACITOR CERAMIC 30PF/50V CH
C705	1-107-826-11	s	CAPACITOR,CHIP CERAMIC 0.1MF
C706	1-162-970-11	s	CAPACITOR CERAMIC 0.01MF/25V B
C707	1-162-970-11	s	CAPACITOR CERAMIC 0.01MF/25V B
C708	1-162-970-11	s	CAPACITOR CERAMIC 0.01MF/25V B
C709	1-162-970-11	s	CAPACITOR CERAMIC 0.01MF/25V B

(VN-13 BOARD [SUFFIX 12] for BKMW-E2000)

Ref. No. or Q'ty	Part No.	SP	Description
C710	1-107-826-11	s	CAPACITOR,CHIP CERAMIC 0.1MF
C711	1-107-826-11	s	CAPACITOR,CHIP CERAMIC 0.1MF
C712	1-107-826-11	s	CAPACITOR,CHIP CERAMIC 0.1MF
C713	1-107-826-11	s	CAPACITOR,CHIP CERAMIC 0.1MF
C714	1-107-826-11	s	CAPACITOR,CHIP CERAMIC 0.1MF
C715	1-162-970-11	s	CAPACITOR CERAMIC 0.01MF/25V B
C716	1-107-826-11	s	CAPACITOR,CHIP CERAMIC 0.1MF
C717	1-162-970-11	s	CAPACITOR CERAMIC 0.01MF/25V B
C718	1-162-970-11	s	CAPACITOR CERAMIC 0.01MF/25V B
C719	1-162-970-11	s	CAPACITOR CERAMIC 0.01MF/25V B
C720	1-107-826-11	s	CAPACITOR,CHIP CERAMIC 0.1MF
C721	1-107-826-11	s	CAPACITOR,CHIP CERAMIC 0.1MF
C722	1-107-826-11	s	CAPACITOR,CHIP CERAMIC 0.1MF
C723	1-127-820-11	s	CAPACITOR, SQUARE CHIP 4.7MF
C724	1-107-826-11	s	CAPACITOR,CHIP CERAMIC 0.1MF
C725	1-162-970-11	s	CAPACITOR CERAMIC 0.01MF/25V B
C726	1-107-826-11	s	CAPACITOR,CHIP CERAMIC 0.1MF
C727	1-162-970-11	s	CAPACITOR CERAMIC 0.01MF/25V B
C728	1-107-826-11	s	CAPACITOR,CHIP CERAMIC 0.1MF
C731	1-107-826-11	s	CAPACITOR,CHIP CERAMIC 0.1MF
C732	1-107-826-11	s	CAPACITOR,CHIP CERAMIC 0.1MF
C733	1-107-826-11	s	CAPACITOR,CHIP CERAMIC 0.1MF
C734	1-107-826-11	s	CAPACITOR,CHIP CERAMIC 0.1MF
C735	1-107-826-11	s	CAPACITOR,CHIP CERAMIC 0.1MF
C736	1-107-826-11	s	CAPACITOR,CHIP CERAMIC 0.1MF
C737	1-107-826-11	s	CAPACITOR,CHIP CERAMIC 0.1MF
C738	1-107-826-11	s	CAPACITOR,CHIP CERAMIC 0.1MF
C739	1-107-826-11	s	CAPACITOR,CHIP CERAMIC 0.1MF
C740	1-107-826-11	s	CAPACITOR,CHIP CERAMIC 0.1MF
C741	1-107-826-11	s	CAPACITOR,CHIP CERAMIC 0.1MF
C742	1-107-826-11	s	CAPACITOR,CHIP CERAMIC 0.1MF
C743	1-107-826-11	s	CAPACITOR,CHIP CERAMIC 0.1MF
C744	1-107-826-11	s	CAPACITOR,CHIP CERAMIC 0.1MF
C745	1-107-826-11	s	CAPACITOR,CHIP CERAMIC 0.1MF
C746	1-107-826-11	s	CAPACITOR,CHIP CERAMIC 0.1MF
C747	1-107-826-11	s	CAPACITOR,CHIP CERAMIC 0.1MF
C748	1-107-826-11	s	CAPACITOR,CHIP CERAMIC 0.1MF
C749	1-107-826-11	s	CAPACITOR,CHIP CERAMIC 0.1MF
C750	1-107-826-11	s	CAPACITOR,CHIP CERAMIC 0.1MF
CN1	1-580-057-11	s	PIN,CONNECTOR 4P
CN5	1-566-567-11	o	CONNECTOR 60P
CN101	1-764-093-21	o	PIN, CONNECTOR (PC BOARD) 8P
CN102	1-770-678-11	o	CONNECTOR, BOARD TO BOARD 50P
CN110	1-764-007-11	o	PIN, CONNECTOR (SMD) 12P
CN701	1-817-292-11	s	JACK, MODULAR (WITH LED, PT)
CN702	1-580-056-21	s	PIN,CONNECTOR 3P
D102	8-719-064-52	s	DIODE CL-191YG-CD-T
D103	8-719-064-52	s	DIODE CL-191YG-CD-T
D104	8-719-071-10	s	DIODE CL-191HR-CD-T
D701	8-719-064-52	s	DIODE CL-191YG-CD-T
D702	8-719-064-52	s	DIODE CL-191YG-CD-T
D703	8-719-064-52	s	DIODE CL-191YG-CD-T
D704	8-719-064-52	s	DIODE CL-191YG-CD-T
D705	8-719-064-52	s	DIODE CL-191YG-CD-T
D706	8-719-064-52	s	DIODE CL-191YG-CD-T
E301	1-535-877-22	s	CHIP,CHECKER (TEST POINT)
E302	1-535-877-22	s	CHIP,CHECKER (TEST POINT)
E303	1-535-877-22	s	CHIP,CHECKER (TEST POINT)

(VN-13 BOARD [SUFFIX 12] for BKMW-E2000)

Ref. No. or Q'ty	Part No.	SP	Description
E304	1-535-877-22	s	CHIP,CHECKER (TEST POINT)
E401	1-535-877-22	s	CHIP,CHECKER (TEST POINT)
E402	1-535-877-22	s	CHIP,CHECKER (TEST POINT)
E405	1-535-877-22	s	CHIP,CHECKER (TEST POINT)
E406	1-535-877-22	s	CHIP,CHECKER (TEST POINT)
E651	1-535-877-22	s	CHIP,CHECKER (TEST POINT)
E652	1-535-877-22	s	CHIP,CHECKER (TEST POINT)
E653	1-535-877-22	s	CHIP,CHECKER (TEST POINT)
F301	⚠ 1-576-270-11	s	FUSE CHIP 4A/125V (6125)
F302	⚠ 1-576-270-11	s	FUSE CHIP 4A/125V (6125)
F303	⚠ 1-576-270-11	s	FUSE CHIP 4A/125V (6125)
FL401	1-233-674-21	s	FILTER, EMI
FL402	1-233-674-21	s	FILTER, EMI
IC1	6-706-415-01	s	IC HD6417750RBP200V
IC4	6-701-025-01	s	IC SN74LVC16244ADGGR
IC5	8-759-524-27	s	IC TC74VHC244FT(EL)
IC6	6-701-025-01	s	IC SN74LVC16244ADGGR
IC7	6-700-628-01	s	IC HY57V281620HCTP-HDR
IC8	6-700-628-01	s	IC HY57V281620HCTP-HDR
IC9	6-700-628-01	s	IC HY57V281620HCTP-HDR
IC10	6-700-628-01	s	IC HY57V281620HCTP-HDR
IC11	8-759-447-77	s	IC TC7WH74FU (TE12R)
IC12	8-759-196-96	s	IC TC7SH08FU (TE85R)
IC13	8-759-549-01	s	IC SN74LV125APWR
IC101	8-759-475-53	s	IC TC74LCX541FT(EL)
IC102	8-759-392-77	s	IC SN74LVC245APW (E20)
IC103	6-703-319-01	o	IC EPM7128AETC100-10(03)
IC104	8-759-681-67	s	IC MBM29LV160BE-90TN
IC105	8-759-681-67	s	IC MBM29LV160BE-90TN
IC106	6-700-628-01	s	IC HY57V281620HCTP-HDR
IC107	6-700-628-01	s	IC HY57V281620HCTP-HDR
IC108	8-759-524-27	s	IC TC74VHC244FT(EL)
IC109	8-759-497-44	s	IC TC7WH125FU(TE12R)
IC110	8-759-497-44	s	IC TC7WH125FU(TE12R)
IC301	8-759-572-86	s	IC LT1085CM-TR
IC302	6-706-136-01	s	IC LTC3412EFE#TRPBF
IC303	6-706-136-01	s	IC LTC3412EFE#TRPBF
IC306	8-759-523-81	s	IC TC74VHC08FT(EL)
IC307	8-759-524-27	s	IC TC74VHC244FT(EL)
IC401	8-759-712-32	s	IC SN65LVDS389DBTR
IC402	8-759-712-31	s	IC SN65LVDT388DBTR
IC403	8-759-712-32	s	IC SN65LVDS389DBTR
IC404	8-759-712-32	s	IC SN65LVDS389DBTR
IC405	8-759-712-31	s	IC SN65LVDT388DBTR
IC406	8-759-712-31	s	IC SN65LVDT388DBTR
IC407	8-759-475-53	s	IC TC74LCX541FT(EL)
IC408	8-759-524-50	s	IC TC74VHC541FT(EL)
IC409	8-759-524-50	s	IC TC74VHC541FT(EL)
IC410	8-759-524-50	s	IC TC74VHC541FT(EL)
IC411	8-759-475-53	s	IC TC74LCX541FT(EL)
IC414	8-759-475-53	s	IC TC74LCX541FT(EL)
IC415	6-705-266-01	s	IC MD36053X-30P
IC416	8-759-647-49	s	IC AL422B-TEL
IC420	8-759-656-54	s	IC TC7WH14FK(TE85R)
IC421	8-759-475-53	s	IC TC74LCX541FT(EL)
IC601	6-706-427-01	s	IC CXD9183GB-P
IC602	8-759-475-47	s	IC TC74LCX244FT(EL)
IC603	6-703-644-01	s	IC AD1895AYRSRL

(VN-13 BOARD [SUFFIX 12] for BKMW-E2000)

Ref. No. or Q'ty	Part No.	SP	Description
IC604	6-702-748-01	s	IC HY57V561620BT-HDR
IC605	6-702-748-01	s	IC HY57V561620BT-HDR
IC606	6-702-748-01	s	IC HY57V561620BT-HDR
IC607	6-702-748-01	s	IC HY57V561620BT-HDR
IC608	6-702-748-01	s	IC HY57V561620BT-HDR
IC609	6-702-748-01	s	IC HY57V561620BT-HDR
IC610	6-702-748-01	s	IC HY57V561620BT-HDR
IC611	6-702-748-01	s	IC HY57V561620BT-HDR
IC612	6-702-748-01	s	IC HY57V561620BT-HDR
IC613	6-702-748-01	s	IC HY57V561620BT-HDR
IC614	8-759-271-86	s	IC TC7SH04FU
IC702	8-759-549-01	s	IC SN74LV125APWR
L101	1-412-923-21	s	INDUCTOR CHIP 0.047UH (2520)
L102	1-412-923-21	s	INDUCTOR CHIP 0.047UH (2520)
L301	1-416-948-21	s	COIL, CHOKE (SMD)
L303	1-416-948-21	s	COIL, CHOKE (SMD)
L304	1-416-948-21	s	COIL, CHOKE (SMD)
L401	1-412-923-21	s	INDUCTOR CHIP 0.047UH (2520)
L402	1-412-923-21	s	INDUCTOR CHIP 0.047UH (2520)
L403	1-412-923-21	s	INDUCTOR CHIP 0.047UH (2520)
L651	1-414-392-31	s	INDUCTOR (SMD) 1.0UH
Q301	8-729-140-63	s	TRANSISTOR 2SA1611-M5M6
Q302	8-729-045-53	s	TRANSISTOR SI4431DY-T1
Q303	8-729-928-81	s	TRANSISTOR DTC144EE
R1	1-216-801-11	s	RESISTOR,CHIP 22 1/10W (1608)
R2	1-211-977-11	s	RESISTOR,CHIP 22 1/10W (1608)
R3	1-211-977-11	s	RESISTOR,CHIP 22 1/10W (1608)
R4	1-216-801-11	s	RESISTOR,CHIP 22 1/10W (1608)
R5	1-216-801-11	s	RESISTOR,CHIP 22 1/10W (1608)
R6	1-216-801-11	s	RESISTOR,CHIP 22 1/10W (1608)
R7	1-216-801-11	s	RESISTOR,CHIP 22 1/10W (1608)
R8	1-216-801-11	s	RESISTOR,CHIP 22 1/10W (1608)
R9	1-216-801-11	s	RESISTOR,CHIP 22 1/10W (1608)
R10	1-216-801-11	s	RESISTOR,CHIP 22 1/10W (1608)
R11	1-216-801-11	s	RESISTOR,CHIP 22 1/10W (1608)
R12	1-216-801-11	s	RESISTOR,CHIP 22 1/10W (1608)
R13	1-216-801-11	s	RESISTOR,CHIP 22 1/10W (1608)
R14	1-216-801-11	s	RESISTOR,CHIP 22 1/10W (1608)
R15	1-216-801-11	s	RESISTOR,CHIP 22 1/10W (1608)
R16	1-216-801-11	s	RESISTOR,CHIP 22 1/10W (1608)
R17	1-216-801-11	s	RESISTOR,CHIP 22 1/10W (1608)
R18	1-216-801-11	s	RESISTOR,CHIP 22 1/10W (1608)
R19	1-216-801-11	s	RESISTOR,CHIP 22 1/10W (1608)
R20	1-216-801-11	s	RESISTOR,CHIP 22 1/10W (1608)
R21	1-216-801-11	s	RESISTOR,CHIP 22 1/10W (1608)
R22	1-216-801-11	s	RESISTOR,CHIP 22 1/10W (1608)
R23	1-216-829-11	s	RESISTOR,CHIP 4.7K 1/10W(1608)
R27	1-216-864-11	s	CONDUCTOR, CHIP (1608)
R29	1-216-829-11	s	RESISTOR,CHIP 4.7K 1/10W(1608)
R30	1-216-829-11	s	RESISTOR,CHIP 4.7K 1/10W(1608)
R31	1-216-829-11	s	RESISTOR,CHIP 4.7K 1/10W(1608)
R32	1-216-864-11	s	CONDUCTOR, CHIP (1608)
R33	1-216-829-11	s	RESISTOR,CHIP 4.7K 1/10W(1608)
R34	1-216-864-11	s	CONDUCTOR, CHIP (1608)
R35	1-216-829-11	s	RESISTOR,CHIP 4.7K 1/10W(1608)
R36	1-216-829-11	s	RESISTOR,CHIP 4.7K 1/10W(1608)
R37	1-216-801-11	s	RESISTOR,CHIP 22 1/10W (1608)
R39	1-216-829-11	s	RESISTOR,CHIP 4.7K 1/10W(1608)

(VN-13 BOARD [SUFFIX 12] for BKMW-E2000)

Ref. No. or Q'ty	Part No.	SP	Description
R40	1-216-821-11	s	RESISTOR,CHIP 1.0K 1/10W(1608)
R42	1-216-801-11	s	RESISTOR,CHIP 22 1/10W (1608)
R43	1-216-829-11	s	RESISTOR,CHIP 4.7K 1/10W(1608)
R44	1-216-829-11	s	RESISTOR,CHIP 4.7K 1/10W(1608)
R45	1-216-829-11	s	RESISTOR,CHIP 4.7K 1/10W(1608)
R46	1-216-801-11	s	RESISTOR,CHIP 22 1/10W (1608)
R47	1-216-801-11	s	RESISTOR,CHIP 22 1/10W (1608)
R48	1-216-829-11	s	RESISTOR,CHIP 4.7K 1/10W(1608)
R49	1-216-801-11	s	RESISTOR,CHIP 22 1/10W (1608)
R51	1-216-829-11	s	RESISTOR,CHIP 4.7K 1/10W(1608)
R52	1-216-829-11	s	RESISTOR,CHIP 4.7K 1/10W(1608)
R53	1-216-801-11	s	RESISTOR,CHIP 22 1/10W (1608)
R54	1-216-801-11	s	RESISTOR,CHIP 22 1/10W (1608)
R55	1-216-801-11	s	RESISTOR,CHIP 22 1/10W (1608)
R56	1-216-801-11	s	RESISTOR,CHIP 22 1/10W (1608)
R57	1-216-829-11	s	RESISTOR,CHIP 4.7K 1/10W(1608)
R58	1-218-961-11	s	RESISTOR, CHIP 4.7K 1/16W
R61	1-216-801-11	s	RESISTOR,CHIP 22 1/10W (1608)
R62	1-216-801-11	s	RESISTOR,CHIP 22 1/10W (1608)
R63	1-216-801-11	s	RESISTOR,CHIP 22 1/10W (1608)
R64	1-216-829-11	s	RESISTOR,CHIP 4.7K 1/10W(1608)
R65	1-216-797-11	s	RESISTOR,CHIP 10 1/10W 1608
R66	1-216-845-11	s	RESISTOR,CHIP 100K 1/10W(1608)
R67	1-216-821-11	s	RESISTOR,CHIP 1.0K 1/10W(1608)
R101	1-216-845-11	s	RESISTOR,CHIP 100K 1/10W(1608)
R102	1-216-845-11	s	RESISTOR,CHIP 100K 1/10W(1608)
R103	1-216-801-11	s	RESISTOR,CHIP 22 1/10W (1608)
R104	1-216-801-11	s	RESISTOR,CHIP 22 1/10W (1608)
R105	1-216-809-11	s	RESISTOR,CHIP 100 1/10W 1608
R106	1-216-845-11	s	RESISTOR,CHIP 100K 1/10W(1608)
R107	1-216-845-11	s	RESISTOR,CHIP 100K 1/10W(1608)
R108	1-216-821-11	s	RESISTOR,CHIP 1.0K 1/10W(1608)
R109	1-216-821-11	s	RESISTOR,CHIP 1.0K 1/10W(1608)
R110	1-216-821-11	s	RESISTOR,CHIP 1.0K 1/10W(1608)
R111	1-216-829-11	s	RESISTOR,CHIP 4.7K 1/10W(1608)
R112	1-216-829-11	s	RESISTOR,CHIP 4.7K 1/10W(1608)
R114	1-216-801-11	s	RESISTOR,CHIP 22 1/10W (1608)
R116	1-216-801-11	s	RESISTOR,CHIP 22 1/10W (1608)
R117	1-216-845-11	s	RESISTOR,CHIP 100K 1/10W(1608)
R118	1-216-845-11	s	RESISTOR,CHIP 100K 1/10W(1608)
R119	1-216-845-11	s	RESISTOR,CHIP 100K 1/10W(1608)
R120	1-216-864-11	s	CONDUCTOR, CHIP (1608)
R121	1-216-845-11	s	RESISTOR,CHIP 100K 1/10W(1608)
R122	1-216-821-11	s	RESISTOR,CHIP 1.0K 1/10W(1608)
R301	1-216-821-11	s	RESISTOR,CHIP 1.0K 1/10W(1608)
R302	1-216-821-11	s	RESISTOR,CHIP 1.0K 1/10W(1608)
R303	1-218-823-11	s	RESISTOR,CHIP 100 1/10W (1608)
R304	1-218-827-11	s	RESISTOR,CHIP 150 1/10W (1608)
R305	1-218-827-11	s	RESISTOR,CHIP 150 1/10W (1608)
R306	1-218-835-11	s	RESISTOR,CHIP 330 1/10W (1608)
R307	1-218-835-11	s	RESISTOR,CHIP 330 1/10W (1608)
R308	1-218-875-11	s	RESISTOR,CHIP 15K 1/10W (1608)
R309	1-218-875-11	s	RESISTOR,CHIP 15K 1/10W (1608)
R310	1-220-397-11	s	RESISTOR, CHIP 4.7M 1/16W 1608
R311	1-220-397-11	s	RESISTOR, CHIP 4.7M 1/16W 1608
R312	1-218-899-11	s	RESISTOR,CHIP 150K 1/10W(1608)
R313	1-218-899-11	s	RESISTOR,CHIP 150K 1/10W(1608)
R314	1-216-801-11	s	RESISTOR,CHIP 22 1/10W (1608)
R315	1-216-845-11	s	RESISTOR,CHIP 100K 1/10W(1608)

(VN-13 BOARD [SUFFIX 12] for BKMW-E2000)

Ref. No. or Q'ty	Part No.	SP	Description
R316	1-216-805-11	s	RESISTOR,CHIP 47 1/10W 1608
R317	1-216-829-11	s	RESISTOR,CHIP 4.7K 1/10W(1608)
R318	1-216-829-11	s	RESISTOR,CHIP 4.7K 1/10W(1608)
R319	1-216-845-11	s	RESISTOR,CHIP 100K 1/10W(1608)
R320	1-216-845-11	s	RESISTOR,CHIP 100K 1/10W(1608)
R321	1-218-895-11	s	RESISTOR,CHIP 100K 1/10W(1608)
R322	1-218-895-11	s	RESISTOR,CHIP 100K 1/10W(1608)
R323	1-218-895-11	s	RESISTOR,CHIP 100K 1/10W(1608)
R324	1-218-895-11	s	RESISTOR,CHIP 100K 1/10W(1608)
R325	1-218-895-11	s	RESISTOR,CHIP 100K 1/10W(1608)
R326	1-218-895-11	s	RESISTOR,CHIP 100K 1/10W(1608)
R327	1-216-833-11	s	RESISTOR,CHIP 10K 1/10W (1608)
R328	1-218-899-11	s	RESISTOR,CHIP 150K 1/10W(1608)
R329	1-218-899-11	s	RESISTOR,CHIP 150K 1/10W(1608)
R330	1-218-875-11	s	RESISTOR,CHIP 15K 1/10W (1608)
R331	1-218-895-11	s	RESISTOR,CHIP 100K 1/10W(1608)
R332	1-218-871-11	s	RESISTOR,CHIP 10K 1/10W (1608)
R335	1-216-805-11	s	RESISTOR,CHIP 47 1/10W 1608
R341	1-218-899-11	s	RESISTOR,CHIP 150K 1/10W(1608)
R342	1-218-899-11	s	RESISTOR,CHIP 150K 1/10W(1608)
R401	1-216-864-11	s	CONDUCTOR, CHIP (1608)
R402	1-216-797-11	s	RESISTOR,CHIP 10 1/10W 1608
R403	1-216-797-11	s	RESISTOR,CHIP 10 1/10W 1608
R404	1-216-797-11	s	RESISTOR,CHIP 10 1/10W 1608
R405	1-216-797-11	s	RESISTOR,CHIP 10 1/10W 1608
R408	1-216-797-11	s	RESISTOR,CHIP 10 1/10W 1608
R413	1-216-821-11	s	RESISTOR,CHIP 1.0K 1/10W(1608)
R414	1-216-801-11	s	RESISTOR,CHIP 22 1/10W (1608)
R416	1-216-801-11	s	RESISTOR,CHIP 22 1/10W (1608)
R418	1-216-797-11	s	RESISTOR,CHIP 10 1/10W 1608
R424	1-216-797-11	s	RESISTOR,CHIP 10 1/10W 1608
R425	1-216-801-11	s	RESISTOR,CHIP 22 1/10W (1608)
R426	1-216-864-11	s	CONDUCTOR, CHIP (1608)
R429	1-216-797-11	s	RESISTOR,CHIP 10 1/10W 1608
R430	1-216-797-11	s	RESISTOR,CHIP 10 1/10W 1608
R431	1-216-797-11	s	RESISTOR,CHIP 10 1/10W 1608
R432	1-216-797-11	s	RESISTOR,CHIP 10 1/10W 1608
R433	1-216-797-11	s	RESISTOR,CHIP 10 1/10W 1608
R434	1-216-864-11	s	CONDUCTOR, CHIP (1608)
R455	1-216-864-11	s	CONDUCTOR, CHIP (1608)
R456	1-216-829-11	s	RESISTOR,CHIP 4.7K 1/10W(1608)
R457	1-216-829-11	s	RESISTOR,CHIP 4.7K 1/10W(1608)
R458	1-218-835-11	s	RESISTOR,CHIP 330 1/10W (1608)
R501	1-216-821-11	s	RESISTOR,CHIP 1.0K 1/10W(1608)
R502	1-216-841-11	s	RESISTOR, CHIP 47K 1/10W 1608
R503	1-216-821-11	s	RESISTOR,CHIP 1.0K 1/10W(1608)
R504	1-216-864-11	s	CONDUCTOR, CHIP (1608)
R601	1-216-797-11	s	RESISTOR,CHIP 10 1/10W 1608
R602	1-216-797-11	s	RESISTOR,CHIP 10 1/10W 1608
R603	1-216-801-11	s	RESISTOR,CHIP 22 1/10W (1608)
R604	1-216-801-11	s	RESISTOR,CHIP 22 1/10W (1608)
R605	1-216-801-11	s	RESISTOR,CHIP 22 1/10W (1608)
R606	1-216-801-11	s	RESISTOR,CHIP 22 1/10W (1608)
R607	1-216-801-11	s	RESISTOR,CHIP 22 1/10W (1608)
R608	1-216-801-11	s	RESISTOR,CHIP 22 1/10W (1608)
R609	1-216-801-11	s	RESISTOR,CHIP 22 1/10W (1608)
R610	1-216-801-11	s	RESISTOR,CHIP 22 1/10W (1608)
R611	1-216-801-11	s	RESISTOR,CHIP 22 1/10W (1608)
R612	1-216-801-11	s	RESISTOR,CHIP 22 1/10W (1608)

(VN-13 BOARD [SUFFIX 12] for BKMW-E2000)

Ref. No. or Q'ty	Part No.	SP	Description
R613	1-216-801-11	s	RESISTOR,CHIP 22 1/10W (1608)
R614	1-216-801-11	s	RESISTOR,CHIP 22 1/10W (1608)
R615	1-216-801-11	s	RESISTOR,CHIP 22 1/10W (1608)
R616	1-216-801-11	s	RESISTOR,CHIP 22 1/10W (1608)
R617	1-216-801-11	s	RESISTOR,CHIP 22 1/10W (1608)
R618	1-216-801-11	s	RESISTOR,CHIP 22 1/10W (1608)
R619	1-216-801-11	s	RESISTOR,CHIP 22 1/10W (1608)
R620	1-216-801-11	s	RESISTOR,CHIP 22 1/10W (1608)
R621	1-216-801-11	s	RESISTOR,CHIP 22 1/10W (1608)
R622	1-216-801-11	s	RESISTOR,CHIP 22 1/10W (1608)
R623	1-216-801-11	s	RESISTOR,CHIP 22 1/10W (1608)
R624	1-216-801-11	s	RESISTOR,CHIP 22 1/10W (1608)
R625	1-216-801-11	s	RESISTOR,CHIP 22 1/10W (1608)
R626	1-216-801-11	s	RESISTOR,CHIP 22 1/10W (1608)
R627	1-216-801-11	s	RESISTOR,CHIP 22 1/10W (1608)
R628	1-216-801-11	s	RESISTOR,CHIP 22 1/10W (1608)
R629	1-216-801-11	s	RESISTOR,CHIP 22 1/10W (1608)
R630	1-216-801-11	s	RESISTOR,CHIP 22 1/10W (1608)
R631	1-216-801-11	s	RESISTOR,CHIP 22 1/10W (1608)
R632	1-216-801-11	s	RESISTOR,CHIP 22 1/10W (1608)
R633	1-216-801-11	s	RESISTOR,CHIP 22 1/10W (1608)
R634	1-216-801-11	s	RESISTOR,CHIP 22 1/10W (1608)
R635	1-216-801-11	s	RESISTOR,CHIP 22 1/10W (1608)
R636	1-216-801-11	s	RESISTOR,CHIP 22 1/10W (1608)
R637	1-216-801-11	s	RESISTOR,CHIP 22 1/10W (1608)
R638	1-216-801-11	s	RESISTOR,CHIP 22 1/10W (1608)
R639	1-216-801-11	s	RESISTOR,CHIP 22 1/10W (1608)
R640	1-216-801-11	s	RESISTOR,CHIP 22 1/10W (1608)
R641	1-216-801-11	s	RESISTOR,CHIP 22 1/10W (1608)
R642	1-216-801-11	s	RESISTOR,CHIP 22 1/10W (1608)
R643	1-216-801-11	s	RESISTOR,CHIP 22 1/10W (1608)
R644	1-216-801-11	s	RESISTOR,CHIP 22 1/10W (1608)
R645	1-216-864-11	s	CONDUCTOR, CHIP (1608)
R646	1-216-801-11	s	RESISTOR,CHIP 22 1/10W (1608)
R647	1-216-801-11	s	RESISTOR,CHIP 22 1/10W (1608)
R648	1-216-801-11	s	RESISTOR,CHIP 22 1/10W (1608)
R649	1-216-801-11	s	RESISTOR,CHIP 22 1/10W (1608)
R650	1-216-801-11	s	RESISTOR,CHIP 22 1/10W (1608)
R651	1-216-801-11	s	RESISTOR,CHIP 22 1/10W (1608)
R652	1-216-801-11	s	RESISTOR,CHIP 22 1/10W (1608)
R653	1-216-801-11	s	RESISTOR,CHIP 22 1/10W (1608)
R654	1-216-864-11	s	CONDUCTOR, CHIP (1608)
R655	1-216-864-11	s	CONDUCTOR, CHIP (1608)
R657	1-216-864-11	s	CONDUCTOR, CHIP (1608)
R663	1-216-801-11	s	RESISTOR,CHIP 22 1/10W (1608)
R664	1-216-864-11	s	CONDUCTOR, CHIP (1608)
R666	1-216-864-11	s	CONDUCTOR, CHIP (1608)
R705	1-216-833-11	s	RESISTOR,CHIP 10K 1/10W (1608)
R706	1-216-801-11	s	RESISTOR,CHIP 22 1/10W (1608)
R707	1-218-851-11	s	RESISTOR,CHIP 1.5K 1/10W(1608)
R708	1-216-833-11	s	RESISTOR,CHIP 10K 1/10W (1608)
R709	1-218-851-11	s	RESISTOR,CHIP 1.5K 1/10W(1608)
R710	1-216-801-11	s	RESISTOR,CHIP 22 1/10W (1608)
R711	1-216-801-11	s	RESISTOR,CHIP 22 1/10W (1608)
R712	1-216-801-11	s	RESISTOR,CHIP 22 1/10W (1608)
R713	1-216-801-11	s	RESISTOR,CHIP 22 1/10W (1608)
R714	1-216-801-11	s	RESISTOR,CHIP 22 1/10W (1608)
R715	1-216-801-11	s	RESISTOR,CHIP 22 1/10W (1608)
R716	1-216-801-11	s	RESISTOR,CHIP 22 1/10W (1608)

(VN-13 BOARD [SUFFIX 12] for BKMW-E2000)

Ref. No. or Q'ty	Part No.	SP	Description
R717	1-216-801-11	s	RESISTOR,CHIP 22 1/10W (1608)
R718	1-216-801-11	s	RESISTOR,CHIP 22 1/10W (1608)
R719	1-216-801-11	s	RESISTOR,CHIP 22 1/10W (1608)
R720	1-216-801-11	s	RESISTOR,CHIP 22 1/10W (1608)
R721	1-216-801-11	s	RESISTOR,CHIP 22 1/10W (1608)
R722	1-216-801-11	s	RESISTOR,CHIP 22 1/10W (1608)
R723	1-216-801-11	s	RESISTOR,CHIP 22 1/10W (1608)
R724	1-216-801-11	s	RESISTOR,CHIP 22 1/10W (1608)
R725	1-216-801-11	s	RESISTOR,CHIP 22 1/10W (1608)
R726	1-216-801-11	s	RESISTOR,CHIP 22 1/10W (1608)
R727	1-216-801-11	s	RESISTOR,CHIP 22 1/10W (1608)
R728	1-216-801-11	s	RESISTOR,CHIP 22 1/10W (1608)
R729	1-216-801-11	s	RESISTOR,CHIP 22 1/10W (1608)
R730	1-216-801-11	s	RESISTOR,CHIP 22 1/10W (1608)
R731	1-216-801-11	s	RESISTOR,CHIP 22 1/10W (1608)
R732	1-216-801-11	s	RESISTOR,CHIP 22 1/10W (1608)
R733	1-216-801-11	s	RESISTOR,CHIP 22 1/10W (1608)
R734	1-216-801-11	s	RESISTOR,CHIP 22 1/10W (1608)
R735	1-218-854-11	s	RESISTOR,CHIP 2K 1/10W (1608)
R736	1-216-809-11	s	RESISTOR,CHIP 100 1/10W 1608
R737	1-218-837-11	s	RESISTOR,CHIP 390 1/10W (1608)
R738	1-216-864-11	s	CONDUCTOR, CHIP (1608)
R739	1-216-864-11	s	CONDUCTOR, CHIP (1608)
R740	1-216-864-11	s	CONDUCTOR, CHIP (1608)
R741	1-216-864-11	s	CONDUCTOR, CHIP (1608)
R742	1-216-864-11	s	CONDUCTOR, CHIP (1608)
R743	1-216-864-11	s	CONDUCTOR, CHIP (1608)
R744	1-216-864-11	s	CONDUCTOR, CHIP (1608)
R745	1-216-821-11	s	RESISTOR,CHIP 1.0K 1/10W(1608)
R746	1-216-821-11	s	RESISTOR,CHIP 1.0K 1/10W(1608)
R747	1-216-821-11	s	RESISTOR,CHIP 1.0K 1/10W(1608)
R748	1-216-821-11	s	RESISTOR,CHIP 1.0K 1/10W(1608)
R749	1-216-821-11	s	RESISTOR,CHIP 1.0K 1/10W(1608)
R750	1-216-821-11	s	RESISTOR,CHIP 1.0K 1/10W(1608)
R751	1-216-793-11	s	RESISTOR,CHIP 4.7 1/16W 1608
R752	1-216-793-11	s	RESISTOR,CHIP 4.7 1/16W 1608
R753	1-216-789-11	s	RESISTOR,CHIP 2.2 1/16W(1608)
R754	1-216-789-11	s	RESISTOR,CHIP 2.2 1/16W(1608)
R755	1-216-793-11	s	RESISTOR,CHIP 4.7 1/16W 1608
R756	1-216-793-11	s	RESISTOR,CHIP 4.7 1/16W 1608
R757	1-216-793-11	s	RESISTOR,CHIP 4.7 1/16W 1608
R758	1-216-793-11	s	RESISTOR,CHIP 4.7 1/16W 1608
R759	1-216-793-11	s	RESISTOR,CHIP 4.7 1/16W 1608
R760	1-216-793-11	s	RESISTOR,CHIP 4.7 1/16W 1608
R761	1-216-793-11	s	RESISTOR,CHIP 4.7 1/16W 1608
R762	1-216-793-11	s	RESISTOR,CHIP 4.7 1/16W 1608
R763	1-216-789-11	s	RESISTOR,CHIP 2.2 1/16W(1608)
R764	1-216-789-11	s	RESISTOR,CHIP 2.2 1/16W(1608)
R765	1-216-789-11	s	RESISTOR,CHIP 2.2 1/16W(1608)
R766	1-216-789-11	s	RESISTOR,CHIP 2.2 1/16W(1608)
R767	1-216-789-11	s	RESISTOR,CHIP 2.2 1/16W(1608)
R768	1-216-789-11	s	RESISTOR,CHIP 2.2 1/16W(1608)
R769	1-216-789-11	s	RESISTOR,CHIP 2.2 1/16W(1608)
R770	1-216-789-11	s	RESISTOR,CHIP 2.2 1/16W(1608)
R771	1-216-797-11	s	RESISTOR,CHIP 10 1/10W 1608
R772	1-216-797-11	s	RESISTOR,CHIP 10 1/10W 1608
R773	1-216-797-11	s	RESISTOR,CHIP 10 1/10W 1608
R774	1-216-797-11	s	RESISTOR,CHIP 10 1/10W 1608
R775	1-216-797-11	s	RESISTOR,CHIP 10 1/10W 1608

(VN-13 BOARD [SUFFIX 12] for BKMW-E2000)

Ref. No. or Q'ty	Part No.	SP	Description
R776	1-216-797-11	s	RESISTOR,CHIP 10 1/10W 1608
R777	1-216-797-11	s	RESISTOR,CHIP 10 1/10W 1608
R778	1-216-797-11	s	RESISTOR,CHIP 10 1/10W 1608
R779	1-216-797-11	s	RESISTOR,CHIP 10 1/10W 1608
R780	1-216-797-11	s	RESISTOR,CHIP 10 1/10W 1608
R781	1-211-981-11	s	RESISTOR,CHIP 33 1/10W (1608)
R782	1-211-981-11	s	RESISTOR,CHIP 33 1/10W (1608)
R783	1-211-981-11	s	RESISTOR,CHIP 33 1/10W (1608)
R784	1-211-981-11	s	RESISTOR,CHIP 33 1/10W (1608)
R785	1-211-981-11	s	RESISTOR,CHIP 33 1/10W (1608)
R786	1-211-981-11	s	RESISTOR,CHIP 33 1/10W (1608)
R787	1-211-981-11	s	RESISTOR,CHIP 33 1/10W (1608)
R788	1-211-981-11	s	RESISTOR,CHIP 33 1/10W (1608)
R789	1-211-981-11	s	RESISTOR,CHIP 33 1/10W (1608)
R790	1-211-981-11	s	RESISTOR,CHIP 33 1/10W (1608)
R791	1-216-801-11	s	RESISTOR,CHIP 22 1/10W (1608)
R792	1-216-801-11	s	RESISTOR,CHIP 22 1/10W (1608)
R793	1-216-801-11	s	RESISTOR,CHIP 22 1/10W (1608)
R794	1-216-821-11	s	RESISTOR,CHIP 1.0K 1/10W(1608)
R795	1-216-821-11	s	RESISTOR,CHIP 1.0K 1/10W(1608)
R796	1-216-864-11	s	CONDUCTOR, CHIP (1608)
R797	1-216-864-11	s	CONDUCTOR, CHIP (1608)
RB17	1-233-575-11	s	RES, CHIP NETWORK 22
RB18	1-233-575-11	s	RES, CHIP NETWORK 22
RB19	1-233-575-11	s	RES, CHIP NETWORK 22
RB20	1-233-575-11	s	RES, CHIP NETWORK 22
RB21	1-233-575-11	s	RES, CHIP NETWORK 22
RB22	1-233-575-11	s	RES, CHIP NETWORK 22
RB23	1-233-575-11	s	RES, CHIP NETWORK 22
RB24	1-233-575-11	s	RES, CHIP NETWORK 22
RB25	1-233-575-11	s	RES, CHIP NETWORK 22
RB26	1-233-575-11	s	RES, CHIP NETWORK 22
RB27	1-233-575-11	s	RES, CHIP NETWORK 22
RB28	1-233-575-11	s	RES, CHIP NETWORK 22
RB29	1-233-575-11	s	RES, CHIP NETWORK 22
RB30	1-233-575-11	s	RES, CHIP NETWORK 22
RB31	1-233-575-11	s	RES, CHIP NETWORK 22
RB32	1-233-575-11	s	RES, CHIP NETWORK 22
RB33	1-233-414-11	s	RESISTOR,CHIP NETWORK 4.7K
RB34	1-233-414-11	s	RESISTOR,CHIP NETWORK 4.7K
RB36	1-233-414-11	s	RESISTOR,CHIP NETWORK 4.7K
RB37	1-233-575-11	s	RES, CHIP NETWORK 22
RB38	1-233-575-11	s	RES, CHIP NETWORK 22
RB39	1-233-575-11	s	RES, CHIP NETWORK 22
RB40	1-233-575-11	s	RES, CHIP NETWORK 22
RB41	1-233-575-11	s	RES, CHIP NETWORK 22
RB42	1-233-575-11	s	RES, CHIP NETWORK 22
RB43	1-233-575-11	s	RES, CHIP NETWORK 22
RB44	1-233-414-11	s	RESISTOR,CHIP NETWORK 4.7K
RB45	1-233-414-11	s	RESISTOR,CHIP NETWORK 4.7K
RB46	1-233-414-11	s	RESISTOR,CHIP NETWORK 4.7K
RB47	1-233-414-11	s	RESISTOR,CHIP NETWORK 4.7K
RB48	1-233-575-11	s	RES, CHIP NETWORK 22
RB101	1-233-414-11	s	RESISTOR,CHIP NETWORK 4.7K
RB102	1-233-576-11	s	RESISTOR,CHIP NETWORK 100
RB103	1-233-414-11	s	RESISTOR,CHIP NETWORK 4.7K
RB104	1-233-810-21	s	RES, NETWORK 100K (3216)
RB105	1-233-576-11	s	RESISTOR,CHIP NETWORK 100

(VN-13 BOARD [SUFFIX 12] for BKMW-E2000)

Ref. No. or Q'ty	Part No.	SP	Description
RB106	1-233-810-21	s	RES, NETWORK 100K (3216)
RB107	1-233-575-11	s	RES, CHIP NETWORK 22
RB108	1-233-575-11	s	RES, CHIP NETWORK 22
RB109	1-233-810-21	s	RES, NETWORK 100K (3216)
RB110	1-233-576-11	s	RESISTOR,CHIP NETWORK 100
RB111	1-233-810-21	s	RES, NETWORK 100K (3216)
RB112	1-233-578-11	s	RESISTOR,CHIP NETWORK 47K
RB113	1-233-414-11	s	RESISTOR,CHIP NETWORK 4.7K
RB114	1-233-414-11	s	RESISTOR,CHIP NETWORK 4.7K
RB115	1-233-414-11	s	RESISTOR,CHIP NETWORK 4.7K
RB116	1-233-414-11	s	RESISTOR,CHIP NETWORK 4.7K
RB117	1-233-575-11	s	RES, CHIP NETWORK 22
RB118	1-233-575-11	s	RES, CHIP NETWORK 22
RB119	1-233-575-11	s	RES, CHIP NETWORK 22
RB120	1-233-575-11	s	RES, CHIP NETWORK 22
RB121	1-233-575-11	s	RES, CHIP NETWORK 22
RB122	1-233-575-11	s	RES, CHIP NETWORK 22
RB123	1-233-575-11	s	RES, CHIP NETWORK 22
RB124	1-233-575-11	s	RES, CHIP NETWORK 22
RB301	1-233-810-21	s	RES, NETWORK 100K (3216)
RB401	1-233-412-11	s	RESISTOR,CHIP NETWORK 1K
RB402	1-233-412-11	s	RESISTOR,CHIP NETWORK 1K
RB403	1-233-412-11	s	RESISTOR,CHIP NETWORK 1K
RB404	1-233-412-11	s	RESISTOR,CHIP NETWORK 1K
RB405	1-233-574-11	s	RESISTOR,CHIP NETWORK 10
RB406	1-233-412-11	s	RESISTOR,CHIP NETWORK 1K
RB407	1-233-412-11	s	RESISTOR,CHIP NETWORK 1K
RB408	1-233-412-11	s	RESISTOR,CHIP NETWORK 1K
RB410	1-233-574-11	s	RESISTOR,CHIP NETWORK 10
RB411	1-233-574-11	s	RESISTOR,CHIP NETWORK 10
RB412	1-233-574-11	s	RESISTOR,CHIP NETWORK 10
RB413	1-233-574-11	s	RESISTOR,CHIP NETWORK 10
RB414	1-233-574-11	s	RESISTOR,CHIP NETWORK 10
RB415	1-233-574-11	s	RESISTOR,CHIP NETWORK 10
RB416	1-233-574-11	s	RESISTOR,CHIP NETWORK 10
RB417	1-233-574-11	s	RESISTOR,CHIP NETWORK 10
RB418	1-233-574-11	s	RESISTOR,CHIP NETWORK 10
RB419	1-233-574-11	s	RESISTOR,CHIP NETWORK 10
RB420	1-233-574-11	s	RESISTOR,CHIP NETWORK 10
RB424	1-233-574-11	s	RESISTOR,CHIP NETWORK 10
RB425	1-233-574-11	s	RESISTOR,CHIP NETWORK 10
RB426	1-233-412-11	s	RESISTOR,CHIP NETWORK 1K
RB427	1-233-574-11	s	RESISTOR,CHIP NETWORK 10
RB428	1-233-574-11	s	RESISTOR,CHIP NETWORK 10
RB429	1-233-574-11	s	RESISTOR,CHIP NETWORK 10
RB430	1-233-574-11	s	RESISTOR,CHIP NETWORK 10
RB431	1-233-574-11	s	RESISTOR,CHIP NETWORK 10
RB432	1-233-574-11	s	RESISTOR,CHIP NETWORK 10
RB433	1-233-574-11	s	RESISTOR,CHIP NETWORK 10
RB434	1-233-574-11	s	RESISTOR,CHIP NETWORK 10
RB435	1-233-574-11	s	RESISTOR,CHIP NETWORK 10
RB436	1-233-574-11	s	RESISTOR,CHIP NETWORK 10
RB437	1-233-574-11	s	RESISTOR,CHIP NETWORK 10
RB444	1-236-908-11	s	RESISTOR,NETWORK 10K (3216)
RB445	1-233-574-11	s	RESISTOR,CHIP NETWORK 10
RB446	1-233-574-11	s	RESISTOR,CHIP NETWORK 10
RB447	1-233-574-11	s	RESISTOR,CHIP NETWORK 10
RB503	1-233-574-11	s	RESISTOR,CHIP NETWORK 10
RB504	1-233-574-11	s	RESISTOR,CHIP NETWORK 10

(VN-13 BOARD [SUFFIX 12] for BKMW-E2000)

Ref. No. or Q'ty	Part No.	SP	Description
RB505	1-233-574-11	s	RESISTOR,CHIP NETWORK 10
RB506	1-233-574-11	s	RESISTOR,CHIP NETWORK 10
RB507	1-233-574-11	s	RESISTOR,CHIP NETWORK 10
RB508	1-233-574-11	s	RESISTOR,CHIP NETWORK 10
RB509	1-233-574-11	s	RESISTOR,CHIP NETWORK 10
RB510	1-233-574-11	s	RESISTOR,CHIP NETWORK 10
RB511	1-233-574-11	s	RESISTOR,CHIP NETWORK 10
RB512	1-233-574-11	s	RESISTOR,CHIP NETWORK 10
RB513	1-233-574-11	s	RESISTOR,CHIP NETWORK 10
RB514	1-233-574-11	s	RESISTOR,CHIP NETWORK 10
RB515	1-233-574-11	s	RESISTOR,CHIP NETWORK 10
RB601	1-233-575-11	s	RES, CHIP NETWORK 22
RB602	1-233-575-11	s	RES, CHIP NETWORK 22
RB603	1-233-575-11	s	RES, CHIP NETWORK 22
RB604	1-233-575-11	s	RES, CHIP NETWORK 22
RB605	1-233-575-11	s	RES, CHIP NETWORK 22
RB606	1-233-575-11	s	RES, CHIP NETWORK 22
RB651	1-234-523-21	s	RESISTOR,CHIP NETWORK
RB652	1-234-523-21	s	RESISTOR,CHIP NETWORK
RB653	1-234-523-21	s	RESISTOR,CHIP NETWORK
RB654	1-234-523-21	s	RESISTOR,CHIP NETWORK
RB655	1-234-523-21	s	RESISTOR,CHIP NETWORK
RB656	1-234-523-21	s	RESISTOR,CHIP NETWORK
RB657	1-234-523-21	s	RESISTOR,CHIP NETWORK
RB658	1-234-523-21	s	RESISTOR,CHIP NETWORK
RB659	1-234-523-21	s	RESISTOR,CHIP NETWORK
RB660	1-234-523-21	s	RESISTOR,CHIP NETWORK
RB661	1-234-523-21	s	RESISTOR,CHIP NETWORK
RB662	1-234-523-21	s	RESISTOR,CHIP NETWORK
S101	1-692-271-31	s	SWITCH, SLIDE
S102	1-692-881-41	s	SWITCH, SLIDE
S104	1-771-721-11	s	SWITCH, TACTILE
S105	1-771-721-11	s	SWITCH, TACTILE
TP101	1-535-877-22	s	CHIP,CHECKER (TEST POINT)
TP102	1-535-877-22	s	CHIP,CHECKER (TEST POINT)
TP401	1-535-877-22	s	CHIP,CHECKER (TEST POINT)
TP402	1-535-877-22	s	CHIP,CHECKER (TEST POINT)
TP403	1-535-877-22	s	CHIP,CHECKER (TEST POINT)
TP404	1-535-877-22	s	CHIP,CHECKER (TEST POINT)
TP601	1-535-877-22	s	CHIP,CHECKER (TEST POINT)
TP602	1-535-877-22	s	CHIP,CHECKER (TEST POINT)
TP651	1-535-877-22	s	CHIP,CHECKER (TEST POINT)
X1	1-795-176-21	s	OSCILLATOR, CRYSTAL
X651	1-795-944-21	s	OSCILLATOR, CRYSTAL (SMD)
X701	1-813-065-11	s	VIBRATOR, CRYSTAL

VN-13 BOARD [SUFFIX 13-]

[Lot No. 495 -] MSW-M2000E/P, M2100E/P
BKMW-E3000

Ref. No. or Q'ty	Part No.	SP	Description
1pc	A-8345-968-C	s	MOUNTED CIRCUIT BOARD, VN-13
C1	1-107-826-11	s	CAPACITOR,CHIP CERAMIC 0.1MF
C2	1-107-826-11	s	CAPACITOR,CHIP CERAMIC 0.1MF
C4	1-107-826-11	s	CAPACITOR,CHIP CERAMIC 0.1MF
C6	1-107-826-11	s	CAPACITOR,CHIP CERAMIC 0.1MF
C7	1-107-826-11	s	CAPACITOR,CHIP CERAMIC 0.1MF
C8	1-107-826-11	s	CAPACITOR,CHIP CERAMIC 0.1MF
C9	1-107-826-11	s	CAPACITOR,CHIP CERAMIC 0.1MF
C10	1-107-826-11	s	CAPACITOR,CHIP CERAMIC 0.1MF
C11	1-107-826-11	s	CAPACITOR,CHIP CERAMIC 0.1MF
C12	1-107-826-11	s	CAPACITOR,CHIP CERAMIC 0.1MF
C13	1-107-826-11	s	CAPACITOR,CHIP CERAMIC 0.1MF
C14	1-107-826-11	s	CAPACITOR,CHIP CERAMIC 0.1MF
C15	1-107-826-11	s	CAPACITOR,CHIP CERAMIC 0.1MF
C16	1-127-692-11	s	CAP, CHIP CERAMIC 10MF B 3216
C18	1-107-826-11	s	CAPACITOR,CHIP CERAMIC 0.1MF
C19	1-107-826-11	s	CAPACITOR,CHIP CERAMIC 0.1MF
C20	1-107-826-11	s	CAPACITOR,CHIP CERAMIC 0.1MF
C21	1-107-826-11	s	CAPACITOR,CHIP CERAMIC 0.1MF
C22	1-107-826-11	s	CAPACITOR,CHIP CERAMIC 0.1MF
C23	1-107-826-11	s	CAPACITOR,CHIP CERAMIC 0.1MF
C24	1-107-826-11	s	CAPACITOR,CHIP CERAMIC 0.1MF
C25	1-107-826-11	s	CAPACITOR,CHIP CERAMIC 0.1MF
C27	1-107-826-11	s	CAPACITOR,CHIP CERAMIC 0.1MF
C28	1-107-826-11	s	CAPACITOR,CHIP CERAMIC 0.1MF
C29	1-107-826-11	s	CAPACITOR,CHIP CERAMIC 0.1MF
C30	1-107-826-11	s	CAPACITOR,CHIP CERAMIC 0.1MF
C31	1-127-692-11	s	CAP, CHIP CERAMIC 10MF B 3216
C32	1-107-826-11	s	CAPACITOR,CHIP CERAMIC 0.1MF
C33	1-107-826-11	s	CAPACITOR,CHIP CERAMIC 0.1MF
C34	1-107-826-11	s	CAPACITOR,CHIP CERAMIC 0.1MF
C35	1-107-826-11	s	CAPACITOR,CHIP CERAMIC 0.1MF
C38	1-107-826-11	s	CAPACITOR,CHIP CERAMIC 0.1MF
C40	1-127-692-11	s	CAP, CHIP CERAMIC 10MF B 3216
C41	1-107-826-11	s	CAPACITOR,CHIP CERAMIC 0.1MF
C42	1-107-826-11	s	CAPACITOR,CHIP CERAMIC 0.1MF
C43	1-107-826-11	s	CAPACITOR,CHIP CERAMIC 0.1MF
C44	1-107-826-11	s	CAPACITOR,CHIP CERAMIC 0.1MF
C45	1-107-826-11	s	CAPACITOR,CHIP CERAMIC 0.1MF
C46	1-107-826-11	s	CAPACITOR,CHIP CERAMIC 0.1MF
C47	1-107-826-11	s	CAPACITOR,CHIP CERAMIC 0.1MF
C48	1-107-826-11	s	CAPACITOR,CHIP CERAMIC 0.1MF
C101	1-107-826-11	s	CAPACITOR,CHIP CERAMIC 0.1MF
C102	1-162-927-11	s	CAPACITOR,CERAMIC 100PF/50V CH
C103	1-162-927-11	s	CAPACITOR,CERAMIC 100PF/50V CH
C104	1-127-692-11	s	CAP, CHIP CERAMIC 10MF B 3216
C105	1-107-826-11	s	CAPACITOR,CHIP CERAMIC 0.1MF
C106	1-107-826-11	s	CAPACITOR,CHIP CERAMIC 0.1MF
C107	1-107-826-11	s	CAPACITOR,CHIP CERAMIC 0.1MF
C108	1-107-826-11	s	CAPACITOR,CHIP CERAMIC 0.1MF
C109	1-107-826-11	s	CAPACITOR,CHIP CERAMIC 0.1MF
C110	1-107-826-11	s	CAPACITOR,CHIP CERAMIC 0.1MF
C111	1-107-826-11	s	CAPACITOR,CHIP CERAMIC 0.1MF
C112	1-107-826-11	s	CAPACITOR,CHIP CERAMIC 0.1MF
C113	1-107-826-11	s	CAPACITOR,CHIP CERAMIC 0.1MF
C114	1-107-826-11	s	CAPACITOR,CHIP CERAMIC 0.1MF
C115	1-107-826-11	s	CAPACITOR,CHIP CERAMIC 0.1MF
C117	1-107-826-11	s	CAPACITOR,CHIP CERAMIC 0.1MF

(VN-13 BOARD [SUFFIX 13-])

Ref. No. or Q'ty	Part No.	SP	Description
C118	1-107-826-11	s	CAPACITOR,CHIP CERAMIC 0.1MF
C119	1-107-826-11	s	CAPACITOR,CHIP CERAMIC 0.1MF
C120	1-107-826-11	s	CAPACITOR,CHIP CERAMIC 0.1MF
C121	1-107-826-11	s	CAPACITOR,CHIP CERAMIC 0.1MF
C301	1-131-661-11	s	CAPACITOR,ELECT 100MF/10V CHIP
C302	1-107-826-11	s	CAPACITOR,CHIP CERAMIC 0.1MF
C303	1-131-661-11	s	CAPACITOR,ELECT 100MF/10V CHIP
C304	1-131-661-11	s	CAPACITOR,ELECT 100MF/10V CHIP
C305	1-107-826-11	s	CAPACITOR,CHIP CERAMIC 0.1MF
C306	1-107-826-11	s	CAPACITOR,CHIP CERAMIC 0.1MF
C307	1-165-947-91	s	CAP, CHIP CERAMIC 2.2MF (3225)
C308	1-126-395-11	s	CAPACITOR,ELECT 22MF/16V(CHIP)
C309	1-165-947-91	s	CAP, CHIP CERAMIC 2.2MF (3225)
C310	1-107-826-11	s	CAPACITOR,CHIP CERAMIC 0.1MF
C311	1-131-661-11	s	CAPACITOR,ELECT 100MF/10V CHIP
C312	1-162-964-11	s	CAPACITOR,CERAMIC 1000PF/50V B
C313	1-162-964-11	s	CAPACITOR,CERAMIC 1000PF/50V B
C314	1-107-826-11	s	CAPACITOR,CHIP CERAMIC 0.1MF
C315	1-107-826-11	s	CAPACITOR,CHIP CERAMIC 0.1MF
C316	1-164-315-11	s	CAPACITOR,CERAMIC 470PF/50V CH
C317	1-164-315-11	s	CAPACITOR,CERAMIC 470PF/50V CH
C318	1-107-826-11	s	CAPACITOR,CHIP CERAMIC 0.1MF
C319	1-107-826-11	s	CAPACITOR,CHIP CERAMIC 0.1MF
C320	1-165-811-11	s	CAPACITOR CHIP CERAMIC 22MF B
C321	1-165-811-11	s	CAPACITOR CHIP CERAMIC 22MF B
C322	1-107-826-11	s	CAPACITOR,CHIP CERAMIC 0.1MF
C323	1-107-826-11	s	CAPACITOR,CHIP CERAMIC 0.1MF
C324	1-107-826-11	s	CAPACITOR,CHIP CERAMIC 0.1MF
C325	1-107-826-11	s	CAPACITOR,CHIP CERAMIC 0.1MF
C326	1-131-661-11	s	CAPACITOR,ELECT 100MF/10V CHIP
C327	1-131-661-11	s	CAPACITOR,ELECT 100MF/10V CHIP
C328	1-162-919-11	s	CAPACITOR,CERAMIC 22PF/50V CH
C329	1-162-919-11	s	CAPACITOR,CERAMIC 22PF/50V CH
C331	1-162-927-11	s	CAPACITOR,CERAMIC 100PF/50V CH
C336	1-107-826-11	s	CAPACITOR,CHIP CERAMIC 0.1MF
C340	1-107-826-11	s	CAPACITOR,CHIP CERAMIC 0.1MF
C401	1-107-826-11	s	CAPACITOR,CHIP CERAMIC 0.1MF
C402	1-107-826-11	s	CAPACITOR,CHIP CERAMIC 0.1MF
C403	1-107-826-11	s	CAPACITOR,CHIP CERAMIC 0.1MF
C404	1-107-826-11	s	CAPACITOR,CHIP CERAMIC 0.1MF
C405	1-107-826-11	s	CAPACITOR,CHIP CERAMIC 0.1MF
C406	1-107-826-11	s	CAPACITOR,CHIP CERAMIC 0.1MF
C407	1-107-826-11	s	CAPACITOR,CHIP CERAMIC 0.1MF
C408	1-107-826-11	s	CAPACITOR,CHIP CERAMIC 0.1MF
C409	1-107-826-11	s	CAPACITOR,CHIP CERAMIC 0.1MF
C411	1-107-826-11	s	CAPACITOR,CHIP CERAMIC 0.1MF
C412	1-107-826-11	s	CAPACITOR,CHIP CERAMIC 0.1MF
C413	1-107-826-11	s	CAPACITOR,CHIP CERAMIC 0.1MF
C414	1-107-826-11	s	CAPACITOR,CHIP CERAMIC 0.1MF
C415	1-127-692-11	s	CAP, CHIP CERAMIC 10MF B 3216
C416	1-107-826-11	s	CAPACITOR,CHIP CERAMIC 0.1MF
C417	1-107-826-11	s	CAPACITOR,CHIP CERAMIC 0.1MF
C418	1-107-826-11	s	CAPACITOR,CHIP CERAMIC 0.1MF
C419	1-107-826-11	s	CAPACITOR,CHIP CERAMIC 0.1MF
C420	1-107-826-11	s	CAPACITOR,CHIP CERAMIC 0.1MF
C421	1-107-826-11	s	CAPACITOR,CHIP CERAMIC 0.1MF
C422	1-107-826-11	s	CAPACITOR,CHIP CERAMIC 0.1MF
C423	1-107-826-11	s	CAPACITOR,CHIP CERAMIC 0.1MF
C426	1-107-826-11	s	CAPACITOR,CHIP CERAMIC 0.1MF

(VN-13 BOARD [SUFFIX 13-])

Ref. No. or Q'ty	Part No.	SP	Description
C427	1-127-692-11	s	CAP, CHIP CERAMIC 10MF B 3216
C428	1-107-826-11	s	CAPACITOR,CHIP CERAMIC 0.1MF
C429	1-127-692-11	s	CAP, CHIP CERAMIC 10MF B 3216
C430	1-107-826-11	s	CAPACITOR,CHIP CERAMIC 0.1MF
C431	1-107-826-11	s	CAPACITOR,CHIP CERAMIC 0.1MF
C432	1-107-826-11	s	CAPACITOR,CHIP CERAMIC 0.1MF
C433	1-107-826-11	s	CAPACITOR,CHIP CERAMIC 0.1MF
C434	1-107-826-11	s	CAPACITOR,CHIP CERAMIC 0.1MF
C435	1-107-826-11	s	CAPACITOR,CHIP CERAMIC 0.1MF
C436	1-107-826-11	s	CAPACITOR,CHIP CERAMIC 0.1MF
C437	1-107-826-11	s	CAPACITOR,CHIP CERAMIC 0.1MF
C438	1-107-826-11	s	CAPACITOR,CHIP CERAMIC 0.1MF
C439	1-107-826-11	s	CAPACITOR,CHIP CERAMIC 0.1MF
C440	1-107-826-11	s	CAPACITOR,CHIP CERAMIC 0.1MF
C441	1-107-826-11	s	CAPACITOR,CHIP CERAMIC 0.1MF
C442	1-107-826-11	s	CAPACITOR,CHIP CERAMIC 0.1MF
C447	1-107-826-11	s	CAPACITOR,CHIP CERAMIC 0.1MF
C601	1-107-826-11	s	CAPACITOR,CHIP CERAMIC 0.1MF
C602	1-107-826-11	s	CAPACITOR,CHIP CERAMIC 0.1MF
C603	1-107-826-11	s	CAPACITOR,CHIP CERAMIC 0.1MF
C604	1-107-826-11	s	CAPACITOR,CHIP CERAMIC 0.1MF
C605	1-107-826-11	s	CAPACITOR,CHIP CERAMIC 0.1MF
C606	1-107-826-11	s	CAPACITOR,CHIP CERAMIC 0.1MF
C607	1-107-826-11	s	CAPACITOR,CHIP CERAMIC 0.1MF
C608	1-107-826-11	s	CAPACITOR,CHIP CERAMIC 0.1MF
C609	1-107-826-11	s	CAPACITOR,CHIP CERAMIC 0.1MF
C610	1-107-826-11	s	CAPACITOR,CHIP CERAMIC 0.1MF
C611	1-107-826-11	s	CAPACITOR,CHIP CERAMIC 0.1MF
C612	1-107-826-11	s	CAPACITOR,CHIP CERAMIC 0.1MF
C613	1-107-826-11	s	CAPACITOR,CHIP CERAMIC 0.1MF
C614	1-107-826-11	s	CAPACITOR,CHIP CERAMIC 0.1MF
C615	1-107-826-11	s	CAPACITOR,CHIP CERAMIC 0.1MF
C616	1-107-826-11	s	CAPACITOR,CHIP CERAMIC 0.1MF
C617	1-107-826-11	s	CAPACITOR,CHIP CERAMIC 0.1MF
C618	1-107-826-11	s	CAPACITOR,CHIP CERAMIC 0.1MF
C619	1-107-826-11	s	CAPACITOR,CHIP CERAMIC 0.1MF
C620	1-107-826-11	s	CAPACITOR,CHIP CERAMIC 0.1MF
C621	1-107-826-11	s	CAPACITOR,CHIP CERAMIC 0.1MF
C622	1-107-826-11	s	CAPACITOR,CHIP CERAMIC 0.1MF
C623	1-107-826-11	s	CAPACITOR,CHIP CERAMIC 0.1MF
C624	1-107-826-11	s	CAPACITOR,CHIP CERAMIC 0.1MF
C625	1-107-826-11	s	CAPACITOR,CHIP CERAMIC 0.1MF
C626	1-107-826-11	s	CAPACITOR,CHIP CERAMIC 0.1MF
C627	1-107-826-11	s	CAPACITOR,CHIP CERAMIC 0.1MF
C628	1-107-826-11	s	CAPACITOR,CHIP CERAMIC 0.1MF
C629	1-107-826-11	s	CAPACITOR,CHIP CERAMIC 0.1MF
C630	1-107-826-11	s	CAPACITOR,CHIP CERAMIC 0.1MF
C631	1-107-826-11	s	CAPACITOR,CHIP CERAMIC 0.1MF
C632	1-107-826-11	s	CAPACITOR,CHIP CERAMIC 0.1MF
C633	1-107-826-11	s	CAPACITOR,CHIP CERAMIC 0.1MF
C634	1-107-826-11	s	CAPACITOR,CHIP CERAMIC 0.1MF
C635	1-107-826-11	s	CAPACITOR,CHIP CERAMIC 0.1MF
C636	1-107-826-11	s	CAPACITOR,CHIP CERAMIC 0.1MF
C637	1-107-826-11	s	CAPACITOR,CHIP CERAMIC 0.1MF
C638	1-107-826-11	s	CAPACITOR,CHIP CERAMIC 0.1MF
C639	1-107-826-11	s	CAPACITOR,CHIP CERAMIC 0.1MF
C640	1-107-826-11	s	CAPACITOR,CHIP CERAMIC 0.1MF
C641	1-107-826-11	s	CAPACITOR,CHIP CERAMIC 0.1MF
C642	1-107-826-11	s	CAPACITOR,CHIP CERAMIC 0.1MF

(VN-13 BOARD [SUFFIX 13-])

Ref. No. or Q'ty	Part No.	SP	Description
C643	1-107-826-11	s	CAPACITOR,CHIP CERAMIC 0.1MF
C644	1-107-826-11	s	CAPACITOR,CHIP CERAMIC 0.1MF
C651	1-107-826-11	s	CAPACITOR,CHIP CERAMIC 0.1MF
C652	1-107-826-11	s	CAPACITOR,CHIP CERAMIC 0.1MF
C653	1-165-989-11	s	CAPACITOR, CERAMIC 10MF (2012)
C654	1-107-826-11	s	CAPACITOR,CHIP CERAMIC 0.1MF
C655	1-107-826-11	s	CAPACITOR,CHIP CERAMIC 0.1MF
C656	1-107-826-11	s	CAPACITOR,CHIP CERAMIC 0.1MF
C657	1-107-826-11	s	CAPACITOR,CHIP CERAMIC 0.1MF
C658	1-107-826-11	s	CAPACITOR,CHIP CERAMIC 0.1MF
C659	1-107-826-11	s	CAPACITOR,CHIP CERAMIC 0.1MF
C662	1-107-826-11	s	CAPACITOR,CHIP CERAMIC 0.1MF
C663	1-107-826-11	s	CAPACITOR,CHIP CERAMIC 0.1MF
C664	1-107-826-11	s	CAPACITOR,CHIP CERAMIC 0.1MF
C665	1-107-826-11	s	CAPACITOR,CHIP CERAMIC 0.1MF
C666	1-107-826-11	s	CAPACITOR,CHIP CERAMIC 0.1MF
C667	1-107-826-11	s	CAPACITOR,CHIP CERAMIC 0.1MF
C668	1-107-826-11	s	CAPACITOR,CHIP CERAMIC 0.1MF
C669	1-107-826-11	s	CAPACITOR,CHIP CERAMIC 0.1MF
C670	1-107-826-11	s	CAPACITOR,CHIP CERAMIC 0.1MF
C671	1-107-826-11	s	CAPACITOR,CHIP CERAMIC 0.1MF
C672	1-107-826-11	s	CAPACITOR,CHIP CERAMIC 0.1MF
C673	1-107-826-11	s	CAPACITOR,CHIP CERAMIC 0.1MF
C674	1-107-826-11	s	CAPACITOR,CHIP CERAMIC 0.1MF
C675	1-107-826-11	s	CAPACITOR,CHIP CERAMIC 0.1MF
C676	1-107-826-11	s	CAPACITOR,CHIP CERAMIC 0.1MF
C677	1-107-826-11	s	CAPACITOR,CHIP CERAMIC 0.1MF
C678	1-107-826-11	s	CAPACITOR,CHIP CERAMIC 0.1MF
C679	1-107-826-11	s	CAPACITOR,CHIP CERAMIC 0.1MF
C680	1-107-826-11	s	CAPACITOR,CHIP CERAMIC 0.1MF
C681	1-107-826-11	s	CAPACITOR,CHIP CERAMIC 0.1MF
C682	1-107-826-11	s	CAPACITOR,CHIP CERAMIC 0.1MF
C683	1-107-826-11	s	CAPACITOR,CHIP CERAMIC 0.1MF
C684	1-107-826-11	s	CAPACITOR,CHIP CERAMIC 0.1MF
C690	1-107-826-11	s	CAPACITOR,CHIP CERAMIC 0.1MF
C691	1-107-826-11	s	CAPACITOR,CHIP CERAMIC 0.1MF
C692	1-107-826-11	s	CAPACITOR,CHIP CERAMIC 0.1MF
C693	1-107-826-11	s	CAPACITOR,CHIP CERAMIC 0.1MF
C694	1-107-826-11	s	CAPACITOR,CHIP CERAMIC 0.1MF
C695	1-107-826-11	s	CAPACITOR,CHIP CERAMIC 0.1MF
C696	1-107-826-11	s	CAPACITOR,CHIP CERAMIC 0.1MF
C697	1-107-826-11	s	CAPACITOR,CHIP CERAMIC 0.1MF
C698	1-107-826-11	s	CAPACITOR,CHIP CERAMIC 0.1MF
C699	1-107-826-11	s	CAPACITOR,CHIP CERAMIC 0.1MF
C700	1-107-826-11	s	CAPACITOR,CHIP CERAMIC 0.1MF
C703	1-164-378-11	s	CAPACITOR CERAMIC 30PF/50V CH
C704	1-164-378-11	s	CAPACITOR CERAMIC 30PF/50V CH
C705	1-107-826-11	s	CAPACITOR,CHIP CERAMIC 0.1MF
C706	1-162-970-11	s	CAPACITOR CERAMIC 0.01MF/25V B
C707	1-162-970-11	s	CAPACITOR CERAMIC 0.01MF/25V B
C708	1-162-970-11	s	CAPACITOR CERAMIC 0.01MF/25V B
C709	1-162-970-11	s	CAPACITOR CERAMIC 0.01MF/25V B
C710	1-107-826-11	s	CAPACITOR,CHIP CERAMIC 0.1MF
C711	1-107-826-11	s	CAPACITOR,CHIP CERAMIC 0.1MF
C712	1-107-826-11	s	CAPACITOR,CHIP CERAMIC 0.1MF
C713	1-107-826-11	s	CAPACITOR,CHIP CERAMIC 0.1MF
C714	1-107-826-11	s	CAPACITOR,CHIP CERAMIC 0.1MF
C715	1-162-970-11	s	CAPACITOR CERAMIC 0.01MF/25V B
C716	1-107-826-11	s	CAPACITOR,CHIP CERAMIC 0.1MF

(VN-13 BOARD [SUFFIX 13-])

Ref. No. or Q'ty	Part No.	SP	Description
C717	1-162-970-11	s	CAPACITOR CERAMIC 0.01MF/25V B
C718	1-162-970-11	s	CAPACITOR CERAMIC 0.01MF/25V B
C719	1-162-970-11	s	CAPACITOR CERAMIC 0.01MF/25V B
C720	1-107-826-11	s	CAPACITOR,CHIP CERAMIC 0.1MF
C721	1-107-826-11	s	CAPACITOR,CHIP CERAMIC 0.1MF
C722	1-107-826-11	s	CAPACITOR,CHIP CERAMIC 0.1MF
C723	1-127-820-11	s	CAPACITOR, SQUARE CHIP 4.7MF
C724	1-107-826-11	s	CAPACITOR,CHIP CERAMIC 0.1MF
C725	1-162-970-11	s	CAPACITOR CERAMIC 0.01MF/25V B
C726	1-107-826-11	s	CAPACITOR,CHIP CERAMIC 0.1MF
C727	1-162-970-11	s	CAPACITOR CERAMIC 0.01MF/25V B
C728	1-107-826-11	s	CAPACITOR,CHIP CERAMIC 0.1MF
C731	1-107-826-11	s	CAPACITOR,CHIP CERAMIC 0.1MF
C732	1-107-826-11	s	CAPACITOR,CHIP CERAMIC 0.1MF
C733	1-107-826-11	s	CAPACITOR,CHIP CERAMIC 0.1MF
C734	1-107-826-11	s	CAPACITOR,CHIP CERAMIC 0.1MF
C735	1-107-826-11	s	CAPACITOR,CHIP CERAMIC 0.1MF
C736	1-107-826-11	s	CAPACITOR,CHIP CERAMIC 0.1MF
C737	1-107-826-11	s	CAPACITOR,CHIP CERAMIC 0.1MF
C738	1-107-826-11	s	CAPACITOR,CHIP CERAMIC 0.1MF
C739	1-107-826-11	s	CAPACITOR,CHIP CERAMIC 0.1MF
C740	1-107-826-11	s	CAPACITOR,CHIP CERAMIC 0.1MF
C741	1-107-826-11	s	CAPACITOR,CHIP CERAMIC 0.1MF
C742	1-107-826-11	s	CAPACITOR,CHIP CERAMIC 0.1MF
C743	1-107-826-11	s	CAPACITOR,CHIP CERAMIC 0.1MF
C744	1-107-826-11	s	CAPACITOR,CHIP CERAMIC 0.1MF
C745	1-107-826-11	s	CAPACITOR,CHIP CERAMIC 0.1MF
C746	1-107-826-11	s	CAPACITOR,CHIP CERAMIC 0.1MF
C747	1-107-826-11	s	CAPACITOR,CHIP CERAMIC 0.1MF
C748	1-107-826-11	s	CAPACITOR,CHIP CERAMIC 0.1MF
C749	1-107-826-11	s	CAPACITOR,CHIP CERAMIC 0.1MF
C750	1-107-826-11	s	CAPACITOR,CHIP CERAMIC 0.1MF
CN1	1-580-057-11	s	PIN,CONNECTOR 4P
CN5	1-566-567-11	o	CONNECTOR 60P
CN101	1-764-093-21	o	PIN, CONNECTOR (PC BOARD) 8P
CN102	1-770-678-11	o	CONNECTOR, BOARD TO BOARD 50P
CN110	1-764-007-11	o	PIN, CONNECTOR (SMD) 12P
CN701	1-817-292-11	s	JACK, MODULAR (WITH LED, PT)
CN702	1-580-056-21	s	PIN,CONNECTOR 3P
D102	8-719-064-52	s	DIODE CL-191YG-CD-T
D103	8-719-064-52	s	DIODE CL-191YG-CD-T
D104	8-719-071-10	s	DIODE CL-191HR-CD-T
D701	8-719-064-52	s	DIODE CL-191YG-CD-T
D702	8-719-064-52	s	DIODE CL-191YG-CD-T
D703	8-719-064-52	s	DIODE CL-191YG-CD-T
D704	8-719-064-52	s	DIODE CL-191YG-CD-T
D705	8-719-064-52	s	DIODE CL-191YG-CD-T
D706	8-719-064-52	s	DIODE CL-191YG-CD-T
E301	1-535-877-22	s	CHIP,CHECKER (TEST POINT)
E302	1-535-877-22	s	CHIP,CHECKER (TEST POINT)
E303	1-535-877-22	s	CHIP,CHECKER (TEST POINT)
E304	1-535-877-22	s	CHIP,CHECKER (TEST POINT)
E401	1-535-877-22	s	CHIP,CHECKER (TEST POINT)
E402	1-535-877-22	s	CHIP,CHECKER (TEST POINT)
E405	1-535-877-22	s	CHIP,CHECKER (TEST POINT)
E406	1-535-877-22	s	CHIP,CHECKER (TEST POINT)
E651	1-535-877-22	s	CHIP,CHECKER (TEST POINT)
E652	1-535-877-22	s	CHIP,CHECKER (TEST POINT)

(VN-13 BOARD [SUFFIX 13-])

Ref. No. or Q'ty	Part No.	SP	Description
E653	1-535-877-22	s	CHIP,CHECKER (TEST POINT)
F301	⚠ 1-576-270-21	s	FUSE (SMD)
F302	⚠ 1-576-270-21	s	FUSE (SMD)
F303	⚠ 1-576-270-21	s	FUSE (SMD)
IC1	6-706-415-01	s	IC HD6417750RBP200V
IC4	6-701-025-01	s	IC SN74LVC16244ADGGR
IC6	6-701-025-01	s	IC SN74LVC16244ADGGR
IC11	8-759-447-77	s	IC TC7WH74FU (TE12R)
IC12	6-706-487-01	s	IC TC7SH08FU(T5RSOYJF)
IC13	8-759-549-01	s	IC SN74LV125APWR
IC101	8-759-475-53	s	IC TC74LCX541FT(EL)
IC102	8-759-392-77	s	IC SN74LVC245APW (E20)
IC104	8-759-681-67	s	IC MBM29LV160BE-90TN
IC105	8-759-681-67	s	IC MBM29LV160BE-90TN
IC108	8-759-524-27	s	IC TC74VHC244FT(EL)
IC109	8-759-497-44	s	IC TC7WH125FU(TE12R)
IC110	8-759-497-44	s	IC TC7WH125FU(TE12R)
IC301	8-759-572-86	s	IC LT1085CM-TR
IC302	6-706-136-01	s	IC LTC3412EFE#TRPBF
IC303	6-706-136-01	s	IC LTC3412EFE#TRPBF
IC306	8-759-523-81	s	IC TC74VHC08FT(EL)
IC307	8-759-524-27	s	IC TC74VHC244FT(EL)
IC401	8-759-712-32	s	IC SN65LVDS389DBTR
IC402	8-759-712-31	s	IC SN65LVDT388DBTR
IC403	8-759-712-32	s	IC SN65LVDS389DBTR
IC404	8-759-712-32	s	IC SN65LVDS389DBTR
IC405	8-759-712-31	s	IC SN65LVDT388DBTR
IC406	8-759-712-31	s	IC SN65LVDT388DBTR
IC407	8-759-475-53	s	IC TC74LCX541FT(EL)
IC408	8-759-524-50	s	IC TC74VHC541FT(EL)
IC409	8-759-524-50	s	IC TC74VHC541FT(EL)
IC410	8-759-524-50	s	IC TC74VHC541FT(EL)
IC414	8-759-475-53	s	IC TC74LCX541FT(EL)
IC415	6-705-266-01	s	IC MD36053X-30P
IC416	8-759-647-49	s	IC AL422B-TEL
IC420	8-759-656-54	s	IC TC7WH14FK(TE85R)
IC601	6-706-427-01	s	IC CXD9183GB-P
IC602	8-759-475-47	s	IC TC74LCX244FT(EL)
IC603	6-703-644-01	s	IC AD1895AYRSRL
IC604	6-706-007-01	s	IC HY57V561620CTP-HDR
IC605	6-706-007-01	s	IC HY57V561620CTP-HDR
IC606	6-706-007-01	s	IC HY57V561620CTP-HDR
IC607	6-706-007-01	s	IC HY57V561620CTP-HDR
IC608	6-706-007-01	s	IC HY57V561620CTP-HDR
IC609	6-706-007-01	s	IC HY57V561620CTP-HDR
IC610	6-706-007-01	s	IC HY57V561620CTP-HDR
IC611	6-706-007-01	s	IC HY57V561620CTP-HDR
IC612	6-706-007-01	s	IC HY57V561620CTP-HDR
IC613	6-706-007-01	s	IC HY57V561620CTP-HDR
IC614	6-706-484-01	s	IC TC7SH04FU(T5RSOYJF)
IC702	8-759-549-01	s	IC SN74LV125APWR
L101	1-412-923-21	s	INDUCTOR CHIP 0.047UH (2520)
L102	1-412-923-21	s	INDUCTOR CHIP 0.047UH (2520)
L301	1-416-948-21	s	COIL, CHOKE (SMD)
L303	1-416-948-21	s	COIL, CHOKE (SMD)
L304	1-416-948-21	s	COIL, CHOKE (SMD)
L401	1-412-923-21	s	INDUCTOR CHIP 0.047UH (2520)

(VN-13 BOARD [SUFFIX 13-])

Ref. No. or Q'ty	Part No.	SP	Description
L402	1-412-923-21	s	INDUCTOR CHIP 0.047UH (2520)
L403	1-412-923-21	s	INDUCTOR CHIP 0.047UH (2520)
L651	1-414-392-31	s	INDUCTOR (SMD) 1.0UH
Q301	8-729-140-63	s	TRANSISTOR 2SA1611-M5M6
Q302	8-729-045-53	s	TRANSISTOR SI4431DY-T1
Q303	8-729-928-81	s	TRANSISTOR DTC144EE
R1	1-216-801-11	s	RESISTOR,CHIP 22 1/10W (1608)
R2	1-211-977-11	s	RESISTOR,CHIP 22 1/10W (1608)
R3	1-211-977-11	s	RESISTOR,CHIP 22 1/10W (1608)
R4	1-216-801-11	s	RESISTOR,CHIP 22 1/10W (1608)
R5	1-216-801-11	s	RESISTOR,CHIP 22 1/10W (1608)
R6	1-216-801-11	s	RESISTOR,CHIP 22 1/10W (1608)
R7	1-216-801-11	s	RESISTOR,CHIP 22 1/10W (1608)
R8	1-216-801-11	s	RESISTOR,CHIP 22 1/10W (1608)
R9	1-216-801-11	s	RESISTOR,CHIP 22 1/10W (1608)
R10	1-216-801-11	s	RESISTOR,CHIP 22 1/10W (1608)
R11	1-216-801-11	s	RESISTOR,CHIP 22 1/10W (1608)
R12	1-216-801-11	s	RESISTOR,CHIP 22 1/10W (1608)
R13	1-216-801-11	s	RESISTOR,CHIP 22 1/10W (1608)
R14	1-216-801-11	s	RESISTOR,CHIP 22 1/10W (1608)
R15	1-216-801-11	s	RESISTOR,CHIP 22 1/10W (1608)
R16	1-216-801-11	s	RESISTOR,CHIP 22 1/10W (1608)
R17	1-216-801-11	s	RESISTOR,CHIP 22 1/10W (1608)
R18	1-216-801-11	s	RESISTOR,CHIP 22 1/10W (1608)
R19	1-216-801-11	s	RESISTOR,CHIP 22 1/10W (1608)
R20	1-216-801-11	s	RESISTOR,CHIP 22 1/10W (1608)
R21	1-216-801-11	s	RESISTOR,CHIP 22 1/10W (1608)
R22	1-216-801-11	s	RESISTOR,CHIP 22 1/10W (1608)
R23	1-216-829-11	s	RESISTOR,CHIP 4.7K 1/10W(1608)
R27	1-216-864-11	s	CONDUCTOR, CHIP (1608)
R29	1-216-829-11	s	RESISTOR,CHIP 4.7K 1/10W(1608)
R30	1-216-829-11	s	RESISTOR,CHIP 4.7K 1/10W(1608)
R31	1-216-829-11	s	RESISTOR,CHIP 4.7K 1/10W(1608)
R32	1-216-864-11	s	CONDUCTOR, CHIP (1608)
R33	1-216-829-11	s	RESISTOR,CHIP 4.7K 1/10W(1608)
R34	1-216-864-11	s	CONDUCTOR, CHIP (1608)
R35	1-216-829-11	s	RESISTOR,CHIP 4.7K 1/10W(1608)
R36	1-216-829-11	s	RESISTOR,CHIP 4.7K 1/10W(1608)
R37	1-216-801-11	s	RESISTOR,CHIP 22 1/10W (1608)
R39	1-216-829-11	s	RESISTOR,CHIP 4.7K 1/10W(1608)
R40	1-216-829-11	s	RESISTOR,CHIP 4.7K 1/10W(1608)
R42	1-216-801-11	s	RESISTOR,CHIP 22 1/10W (1608)
R43	1-216-829-11	s	RESISTOR,CHIP 4.7K 1/10W(1608)
R44	1-216-829-11	s	RESISTOR,CHIP 4.7K 1/10W(1608)
R45	1-216-829-11	s	RESISTOR,CHIP 4.7K 1/10W(1608)
R46	1-216-801-11	s	RESISTOR,CHIP 22 1/10W (1608)
R47	1-216-801-11	s	RESISTOR,CHIP 22 1/10W (1608)
R48	1-216-829-11	s	RESISTOR,CHIP 4.7K 1/10W(1608)
R49	1-216-801-11	s	RESISTOR,CHIP 22 1/10W (1608)
R51	1-216-829-11	s	RESISTOR,CHIP 4.7K 1/10W(1608)
R52	1-216-829-11	s	RESISTOR,CHIP 4.7K 1/10W(1608)
R53	1-216-801-11	s	RESISTOR,CHIP 22 1/10W (1608)
R54	1-216-801-11	s	RESISTOR,CHIP 22 1/10W (1608)
R55	1-216-801-11	s	RESISTOR,CHIP 22 1/10W (1608)
R56	1-216-801-11	s	RESISTOR,CHIP 22 1/10W (1608)
R57	1-216-829-11	s	RESISTOR,CHIP 4.7K 1/10W(1608)
R58	1-218-961-11	s	RESISTOR, CHIP 4.7K 1/16W
R61	1-216-801-11	s	RESISTOR,CHIP 22 1/10W (1608)

(VN-13 BOARD [SUFFIX 13-])

Ref. No. or Q'ty	Part No.	SP	Description
R62	1-216-801-11	s	RESISTOR,CHIP 22 1/10W (1608)
R63	1-216-801-11	s	RESISTOR,CHIP 22 1/10W (1608)
R64	1-216-829-11	s	RESISTOR,CHIP 4.7K 1/10W(1608)
R65	1-216-797-11	s	RESISTOR,CHIP 10 1/10W 1608
R66	1-216-845-11	s	RESISTOR,CHIP 100K 1/10W(1608)
R67	1-216-821-11	s	RESISTOR,CHIP 1.0K 1/10W(1608)
R101	1-216-845-11	s	RESISTOR,CHIP 100K 1/10W(1608)
R102	1-216-845-11	s	RESISTOR,CHIP 100K 1/10W(1608)
R103	1-216-801-11	s	RESISTOR,CHIP 22 1/10W (1608)
R104	1-216-801-11	s	RESISTOR,CHIP 22 1/10W (1608)
R105	1-216-809-11	s	RESISTOR,CHIP 100 1/10W 1608
R106	1-216-845-11	s	RESISTOR,CHIP 100K 1/10W(1608)
R107	1-216-845-11	s	RESISTOR,CHIP 100K 1/10W(1608)
R108	1-216-821-11	s	RESISTOR,CHIP 1.0K 1/10W(1608)
R109	1-216-821-11	s	RESISTOR,CHIP 1.0K 1/10W(1608)
R110	1-216-821-11	s	RESISTOR,CHIP 1.0K 1/10W(1608)
R111	1-216-829-11	s	RESISTOR,CHIP 4.7K 1/10W(1608)
R112	1-216-829-11	s	RESISTOR,CHIP 4.7K 1/10W(1608)
R113	1-216-845-11	s	RESISTOR,CHIP 100K 1/10W(1608)
R114	1-216-801-11	s	RESISTOR,CHIP 22 1/10W (1608)
R116	1-216-801-11	s	RESISTOR,CHIP 22 1/10W (1608)
R117	1-216-845-11	s	RESISTOR,CHIP 100K 1/10W(1608)
R118	1-216-845-11	s	RESISTOR,CHIP 100K 1/10W(1608)
R119	1-216-845-11	s	RESISTOR,CHIP 100K 1/10W(1608)
R120	1-216-864-11	s	CONDUCTOR, CHIP (1608)
R121	1-216-845-11	s	RESISTOR,CHIP 100K 1/10W(1608)
R122	1-216-821-11	s	RESISTOR,CHIP 1.0K 1/10W(1608)
R301	1-216-821-11	s	RESISTOR,CHIP 1.0K 1/10W(1608)
R302	1-216-821-11	s	RESISTOR,CHIP 1.0K 1/10W(1608)
R303	1-218-823-11	s	RESISTOR,CHIP 100 1/10W (1608)
R304	1-218-827-11	s	RESISTOR,CHIP 150 1/10W (1608)
R305	1-218-827-11	s	RESISTOR,CHIP 150 1/10W (1608)
R306	1-218-835-11	s	RESISTOR,CHIP 330 1/10W (1608)
R307	1-218-835-11	s	RESISTOR,CHIP 330 1/10W (1608)
R308	1-218-875-11	s	RESISTOR,CHIP 15K 1/10W (1608)
R309	1-218-875-11	s	RESISTOR,CHIP 15K 1/10W (1608)
R310	1-220-397-11	s	RESISTOR, CHIP 4.7M 1/16W 1608
R311	1-220-397-11	s	RESISTOR, CHIP 4.7M 1/16W 1608
R312	1-218-899-11	s	RESISTOR,CHIP 150K 1/10W(1608)
R313	1-218-899-11	s	RESISTOR,CHIP 150K 1/10W(1608)
R314	1-216-801-11	s	RESISTOR,CHIP 22 1/10W (1608)
R315	1-216-845-11	s	RESISTOR,CHIP 100K 1/10W(1608)
R316	1-216-805-11	s	RESISTOR,CHIP 47 1/10W 1608
R317	1-216-829-11	s	RESISTOR,CHIP 4.7K 1/10W(1608)
R318	1-216-829-11	s	RESISTOR,CHIP 4.7K 1/10W(1608)
R319	1-216-845-11	s	RESISTOR,CHIP 100K 1/10W(1608)
R320	1-216-845-11	s	RESISTOR,CHIP 100K 1/10W(1608)
R321	1-218-895-11	s	RESISTOR,CHIP 100K 1/10W(1608)
R322	1-218-895-11	s	RESISTOR,CHIP 100K 1/10W(1608)
R323	1-218-895-11	s	RESISTOR,CHIP 100K 1/10W(1608)
R324	1-218-895-11	s	RESISTOR,CHIP 100K 1/10W(1608)
R325	1-218-895-11	s	RESISTOR,CHIP 100K 1/10W(1608)
R326	1-218-895-11	s	RESISTOR,CHIP 100K 1/10W(1608)
R327	1-216-833-11	s	RESISTOR,CHIP 10K 1/10W (1608)
R328	1-218-899-11	s	RESISTOR,CHIP 150K 1/10W(1608)
R329	1-218-899-11	s	RESISTOR,CHIP 150K 1/10W(1608)
R330	1-218-875-11	s	RESISTOR,CHIP 15K 1/10W (1608)
R331	1-218-895-11	s	RESISTOR,CHIP 100K 1/10W(1608)
R332	1-218-871-11	s	RESISTOR,CHIP 10K 1/10W (1608)

(VN-13 BOARD [SUFFIX 13-])

Ref. No. or Q'ty	Part No.	SP	Description
R335	1-216-805-11	s	RESISTOR,CHIP 47 1/10W 1608
R341	1-218-899-11	s	RESISTOR,CHIP 150K 1/10W(1608)
R342	1-218-899-11	s	RESISTOR,CHIP 150K 1/10W(1608)
R401	1-216-864-11	s	CONDUCTOR, CHIP (1608)
R402	1-216-797-11	s	RESISTOR,CHIP 10 1/10W 1608
R403	1-216-797-11	s	RESISTOR,CHIP 10 1/10W 1608
R404	1-216-797-11	s	RESISTOR,CHIP 10 1/10W 1608
R405	1-216-797-11	s	RESISTOR,CHIP 10 1/10W 1608
R408	1-216-797-11	s	RESISTOR,CHIP 10 1/10W 1608
R414	1-216-801-11	s	RESISTOR,CHIP 22 1/10W (1608)
R416	1-216-801-11	s	RESISTOR,CHIP 22 1/10W (1608)
R418	1-216-797-11	s	RESISTOR,CHIP 10 1/10W 1608
R424	1-216-797-11	s	RESISTOR,CHIP 10 1/10W 1608
R425	1-216-801-11	s	RESISTOR,CHIP 22 1/10W (1608)
R426	1-216-864-11	s	CONDUCTOR, CHIP (1608)
R429	1-216-797-11	s	RESISTOR,CHIP 10 1/10W 1608
R430	1-216-797-11	s	RESISTOR,CHIP 10 1/10W 1608
R431	1-216-797-11	s	RESISTOR,CHIP 10 1/10W 1608
R432	1-216-797-11	s	RESISTOR,CHIP 10 1/10W 1608
R434	1-216-864-11	s	CONDUCTOR, CHIP (1608)
R456	1-216-829-11	s	RESISTOR,CHIP 4.7K 1/10W(1608)
R457	1-216-829-11	s	RESISTOR,CHIP 4.7K 1/10W(1608)
R458	1-218-835-11	s	RESISTOR,CHIP 330 1/10W (1608)
R461	1-216-864-11	s	CONDUCTOR, CHIP (1608)
R502	1-216-841-11	s	RESISTOR, CHIP 47K 1/10W 1608
R503	1-216-821-11	s	RESISTOR,CHIP 1.0K 1/10W(1608)
R504	1-216-864-11	s	CONDUCTOR, CHIP (1608)
R601	1-216-797-11	s	RESISTOR,CHIP 10 1/10W 1608
R602	1-216-797-11	s	RESISTOR,CHIP 10 1/10W 1608
R603	1-216-801-11	s	RESISTOR,CHIP 22 1/10W (1608)
R604	1-216-801-11	s	RESISTOR,CHIP 22 1/10W (1608)
R605	1-216-801-11	s	RESISTOR,CHIP 22 1/10W (1608)
R606	1-216-801-11	s	RESISTOR,CHIP 22 1/10W (1608)
R607	1-216-801-11	s	RESISTOR,CHIP 22 1/10W (1608)
R608	1-216-801-11	s	RESISTOR,CHIP 22 1/10W (1608)
R609	1-216-801-11	s	RESISTOR,CHIP 22 1/10W (1608)
R610	1-216-801-11	s	RESISTOR,CHIP 22 1/10W (1608)
R611	1-216-801-11	s	RESISTOR,CHIP 22 1/10W (1608)
R612	1-216-801-11	s	RESISTOR,CHIP 22 1/10W (1608)
R613	1-216-801-11	s	RESISTOR,CHIP 22 1/10W (1608)
R614	1-216-801-11	s	RESISTOR,CHIP 22 1/10W (1608)
R615	1-216-801-11	s	RESISTOR,CHIP 22 1/10W (1608)
R616	1-216-801-11	s	RESISTOR,CHIP 22 1/10W (1608)
R617	1-216-801-11	s	RESISTOR,CHIP 22 1/10W (1608)
R618	1-216-801-11	s	RESISTOR,CHIP 22 1/10W (1608)
R619	1-216-801-11	s	RESISTOR,CHIP 22 1/10W (1608)
R620	1-216-801-11	s	RESISTOR,CHIP 22 1/10W (1608)
R621	1-216-801-11	s	RESISTOR,CHIP 22 1/10W (1608)
R622	1-216-801-11	s	RESISTOR,CHIP 22 1/10W (1608)
R623	1-216-801-11	s	RESISTOR,CHIP 22 1/10W (1608)
R624	1-216-801-11	s	RESISTOR,CHIP 22 1/10W (1608)
R625	1-216-801-11	s	RESISTOR,CHIP 22 1/10W (1608)
R626	1-216-801-11	s	RESISTOR,CHIP 22 1/10W (1608)
R627	1-216-801-11	s	RESISTOR,CHIP 22 1/10W (1608)
R628	1-216-801-11	s	RESISTOR,CHIP 22 1/10W (1608)
R629	1-216-801-11	s	RESISTOR,CHIP 22 1/10W (1608)
R630	1-216-801-11	s	RESISTOR,CHIP 22 1/10W (1608)
R631	1-216-801-11	s	RESISTOR,CHIP 22 1/10W (1608)
R632	1-216-801-11	s	RESISTOR,CHIP 22 1/10W (1608)

(VN-13 BOARD [SUFFIX 13-])

Ref. No. or Q'ty	Part No.	SP	Description
R633	1-216-801-11	s	RESISTOR,CHIP 22 1/10W (1608)
R634	1-216-801-11	s	RESISTOR,CHIP 22 1/10W (1608)
R635	1-216-801-11	s	RESISTOR,CHIP 22 1/10W (1608)
R636	1-216-801-11	s	RESISTOR,CHIP 22 1/10W (1608)
R637	1-216-801-11	s	RESISTOR,CHIP 22 1/10W (1608)
R638	1-216-801-11	s	RESISTOR,CHIP 22 1/10W (1608)
R639	1-216-801-11	s	RESISTOR,CHIP 22 1/10W (1608)
R640	1-216-801-11	s	RESISTOR,CHIP 22 1/10W (1608)
R641	1-216-801-11	s	RESISTOR,CHIP 22 1/10W (1608)
R642	1-216-801-11	s	RESISTOR,CHIP 22 1/10W (1608)
R643	1-216-801-11	s	RESISTOR,CHIP 22 1/10W (1608)
R644	1-216-801-11	s	RESISTOR,CHIP 22 1/10W (1608)
R645	1-216-864-11	s	CONDUCTOR, CHIP (1608)
R646	1-216-801-11	s	RESISTOR,CHIP 22 1/10W (1608)
R647	1-216-801-11	s	RESISTOR,CHIP 22 1/10W (1608)
R648	1-216-801-11	s	RESISTOR,CHIP 22 1/10W (1608)
R649	1-216-801-11	s	RESISTOR,CHIP 22 1/10W (1608)
R650	1-216-801-11	s	RESISTOR,CHIP 22 1/10W (1608)
R651	1-216-801-11	s	RESISTOR,CHIP 22 1/10W (1608)
R652	1-216-801-11	s	RESISTOR,CHIP 22 1/10W (1608)
R653	1-216-801-11	s	RESISTOR,CHIP 22 1/10W (1608)
R654	1-216-864-11	s	CONDUCTOR, CHIP (1608)
R655	1-216-864-11	s	CONDUCTOR, CHIP (1608)
R657	1-216-864-11	s	CONDUCTOR, CHIP (1608)
R663	1-216-801-11	s	RESISTOR,CHIP 22 1/10W (1608)
R664	1-216-864-11	s	CONDUCTOR, CHIP (1608)
R666	1-216-864-11	s	CONDUCTOR, CHIP (1608)
R705	1-216-833-11	s	RESISTOR,CHIP 10K 1/10W (1608)
R706	1-216-801-11	s	RESISTOR,CHIP 22 1/10W (1608)
R707	1-218-851-11	s	RESISTOR,CHIP 1.5K 1/10W(1608)
R708	1-216-833-11	s	RESISTOR,CHIP 10K 1/10W (1608)
R709	1-218-851-11	s	RESISTOR,CHIP 1.5K 1/10W(1608)
R710	1-216-801-11	s	RESISTOR,CHIP 22 1/10W (1608)
R711	1-216-801-11	s	RESISTOR,CHIP 22 1/10W (1608)
R712	1-216-801-11	s	RESISTOR,CHIP 22 1/10W (1608)
R713	1-216-801-11	s	RESISTOR,CHIP 22 1/10W (1608)
R714	1-216-801-11	s	RESISTOR,CHIP 22 1/10W (1608)
R715	1-216-801-11	s	RESISTOR,CHIP 22 1/10W (1608)
R716	1-216-801-11	s	RESISTOR,CHIP 22 1/10W (1608)
R717	1-216-801-11	s	RESISTOR,CHIP 22 1/10W (1608)
R718	1-216-801-11	s	RESISTOR,CHIP 22 1/10W (1608)
R719	1-216-801-11	s	RESISTOR,CHIP 22 1/10W (1608)
R720	1-216-801-11	s	RESISTOR,CHIP 22 1/10W (1608)
R721	1-216-801-11	s	RESISTOR,CHIP 22 1/10W (1608)
R722	1-216-801-11	s	RESISTOR,CHIP 22 1/10W (1608)
R723	1-216-801-11	s	RESISTOR,CHIP 22 1/10W (1608)
R724	1-216-801-11	s	RESISTOR,CHIP 22 1/10W (1608)
R725	1-216-801-11	s	RESISTOR,CHIP 22 1/10W (1608)
R726	1-216-801-11	s	RESISTOR,CHIP 22 1/10W (1608)
R727	1-216-801-11	s	RESISTOR,CHIP 22 1/10W (1608)
R728	1-216-801-11	s	RESISTOR,CHIP 22 1/10W (1608)
R729	1-216-801-11	s	RESISTOR,CHIP 22 1/10W (1608)
R730	1-216-801-11	s	RESISTOR,CHIP 22 1/10W (1608)
R731	1-216-801-11	s	RESISTOR,CHIP 22 1/10W (1608)
R732	1-216-801-11	s	RESISTOR,CHIP 22 1/10W (1608)
R733	1-216-801-11	s	RESISTOR,CHIP 22 1/10W (1608)
R734	1-216-801-11	s	RESISTOR,CHIP 22 1/10W (1608)
R735	1-218-854-11	s	RESISTOR,CHIP 2K 1/10W (1608)
R736	1-216-809-11	s	RESISTOR,CHIP 100 1/10W 1608

(VN-13 BOARD [SUFFIX 13-])

Ref. No. or Q'ty	Part No.	SP	Description
R737	1-218-837-11	s	RESISTOR,CHIP 390 1/10W (1608)
R738	1-216-864-11	s	CONDUCTOR, CHIP (1608)
R739	1-216-864-11	s	CONDUCTOR, CHIP (1608)
R740	1-216-864-11	s	CONDUCTOR, CHIP (1608)
R741	1-216-864-11	s	CONDUCTOR, CHIP (1608)
R742	1-216-864-11	s	CONDUCTOR, CHIP (1608)
R743	1-216-864-11	s	CONDUCTOR, CHIP (1608)
R744	1-216-864-11	s	CONDUCTOR, CHIP (1608)
R745	1-216-821-11	s	RESISTOR,CHIP 1.0K 1/10W(1608)
R746	1-216-821-11	s	RESISTOR,CHIP 1.0K 1/10W(1608)
R747	1-216-821-11	s	RESISTOR,CHIP 1.0K 1/10W(1608)
R748	1-216-821-11	s	RESISTOR,CHIP 1.0K 1/10W(1608)
R749	1-216-821-11	s	RESISTOR,CHIP 1.0K 1/10W(1608)
R750	1-216-821-11	s	RESISTOR,CHIP 1.0K 1/10W(1608)
R751	1-216-793-11	s	RESISTOR,CHIP 4.7 1/16W 1608
R752	1-216-793-11	s	RESISTOR,CHIP 4.7 1/16W 1608
R753	1-216-789-11	s	RESISTOR,CHIP 2.2 1/16W(1608)
R754	1-216-789-11	s	RESISTOR,CHIP 2.2 1/16W(1608)
R755	1-216-793-11	s	RESISTOR,CHIP 4.7 1/16W 1608
R756	1-216-793-11	s	RESISTOR,CHIP 4.7 1/16W 1608
R757	1-216-793-11	s	RESISTOR,CHIP 4.7 1/16W 1608
R758	1-216-793-11	s	RESISTOR,CHIP 4.7 1/16W 1608
R759	1-216-793-11	s	RESISTOR,CHIP 4.7 1/16W 1608
R760	1-216-793-11	s	RESISTOR,CHIP 4.7 1/16W 1608
R761	1-216-793-11	s	RESISTOR,CHIP 4.7 1/16W 1608
R762	1-216-793-11	s	RESISTOR,CHIP 4.7 1/16W 1608
R763	1-216-789-11	s	RESISTOR,CHIP 2.2 1/16W(1608)
R764	1-216-789-11	s	RESISTOR,CHIP 2.2 1/16W(1608)
R765	1-216-789-11	s	RESISTOR,CHIP 2.2 1/16W(1608)
R766	1-216-789-11	s	RESISTOR,CHIP 2.2 1/16W(1608)
R767	1-216-789-11	s	RESISTOR,CHIP 2.2 1/16W(1608)
R768	1-216-789-11	s	RESISTOR,CHIP 2.2 1/16W(1608)
R769	1-216-789-11	s	RESISTOR,CHIP 2.2 1/16W(1608)
R770	1-216-789-11	s	RESISTOR,CHIP 2.2 1/16W(1608)
R771	1-211-969-11	s	RESISTOR,CHIP 10 1/10W (1608)
R772	1-211-969-11	s	RESISTOR,CHIP 10 1/10W (1608)
R773	1-211-969-11	s	RESISTOR,CHIP 10 1/10W (1608)
R774	1-211-969-11	s	RESISTOR,CHIP 10 1/10W (1608)
R775	1-211-969-11	s	RESISTOR,CHIP 10 1/10W (1608)
R776	1-211-969-11	s	RESISTOR,CHIP 10 1/10W (1608)
R777	1-211-969-11	s	RESISTOR,CHIP 10 1/10W (1608)
R778	1-211-969-11	s	RESISTOR,CHIP 10 1/10W (1608)
R779	1-211-969-11	s	RESISTOR,CHIP 10 1/10W (1608)
R780	1-211-969-11	s	RESISTOR,CHIP 10 1/10W (1608)
R781	1-211-981-11	s	RESISTOR,CHIP 33 1/10W (1608)
R782	1-211-981-11	s	RESISTOR,CHIP 33 1/10W (1608)
R783	1-211-981-11	s	RESISTOR,CHIP 33 1/10W (1608)
R784	1-211-981-11	s	RESISTOR,CHIP 33 1/10W (1608)
R785	1-211-981-11	s	RESISTOR,CHIP 33 1/10W (1608)
R786	1-211-981-11	s	RESISTOR,CHIP 33 1/10W (1608)
R787	1-211-981-11	s	RESISTOR,CHIP 33 1/10W (1608)
R788	1-211-981-11	s	RESISTOR,CHIP 33 1/10W (1608)
R789	1-211-981-11	s	RESISTOR,CHIP 33 1/10W (1608)
R790	1-211-981-11	s	RESISTOR,CHIP 33 1/10W (1608)
R791	1-216-801-11	s	RESISTOR,CHIP 22 1/10W (1608)
R792	1-216-801-11	s	RESISTOR,CHIP 22 1/10W (1608)
R793	1-216-801-11	s	RESISTOR,CHIP 22 1/10W (1608)
R794	1-216-821-11	s	RESISTOR,CHIP 1.0K 1/10W(1608)
R795	1-216-821-11	s	RESISTOR,CHIP 1.0K 1/10W(1608)

(VN-13 BOARD [SUFFIX 13-])

Ref. No. or Q'ty	Part No.	SP	Description
R796	1-216-864-11	s	CONDUCTOR, CHIP (1608)
R797	1-216-864-11	s	CONDUCTOR, CHIP (1608)
RB17	1-233-575-11	s	RES, CHIP NETWORK 22
RB18	1-233-575-11	s	RES, CHIP NETWORK 22
RB19	1-233-575-11	s	RES, CHIP NETWORK 22
RB20	1-233-575-11	s	RES, CHIP NETWORK 22
RB21	1-233-575-11	s	RES, CHIP NETWORK 22
RB22	1-233-575-11	s	RES, CHIP NETWORK 22
RB23	1-233-575-11	s	RES, CHIP NETWORK 22
RB24	1-233-575-11	s	RES, CHIP NETWORK 22
RB25	1-233-575-11	s	RES, CHIP NETWORK 22
RB26	1-233-575-11	s	RES, CHIP NETWORK 22
RB27	1-233-575-11	s	RES, CHIP NETWORK 22
RB28	1-233-575-11	s	RES, CHIP NETWORK 22
RB29	1-233-575-11	s	RES, CHIP NETWORK 22
RB30	1-233-575-11	s	RES, CHIP NETWORK 22
RB31	1-233-575-11	s	RES, CHIP NETWORK 22
RB32	1-233-575-11	s	RES, CHIP NETWORK 22
RB34	1-233-414-11	s	RESISTOR,CHIP NETWORK 4.7K
RB36	1-233-414-11	s	RESISTOR,CHIP NETWORK 4.7K
RB37	1-233-575-11	s	RES, CHIP NETWORK 22
RB38	1-233-575-11	s	RES, CHIP NETWORK 22
RB39	1-233-575-11	s	RES, CHIP NETWORK 22
RB40	1-233-575-11	s	RES, CHIP NETWORK 22
RB41	1-233-575-11	s	RES, CHIP NETWORK 22
RB42	1-233-575-11	s	RES, CHIP NETWORK 22
RB43	1-233-575-11	s	RES, CHIP NETWORK 22
RB44	1-233-414-11	s	RESISTOR,CHIP NETWORK 4.7K
RB45	1-233-414-11	s	RESISTOR,CHIP NETWORK 4.7K
RB46	1-233-414-11	s	RESISTOR,CHIP NETWORK 4.7K
RB47	1-233-414-11	s	RESISTOR,CHIP NETWORK 4.7K
RB48	1-233-575-11	s	RES, CHIP NETWORK 22
RB101	1-233-414-11	s	RESISTOR,CHIP NETWORK 4.7K
RB102	1-233-576-11	s	RESISTOR,CHIP NETWORK 100
RB103	1-233-414-11	s	RESISTOR,CHIP NETWORK 4.7K
RB104	1-233-810-21	s	RES, NETWORK 100K (3216)
RB105	1-233-576-11	s	RESISTOR,CHIP NETWORK 100
RB106	1-233-810-21	s	RES, NETWORK 100K (3216)
RB107	1-233-575-11	s	RES, CHIP NETWORK 22
RB108	1-233-575-11	s	RES, CHIP NETWORK 22
RB109	1-233-810-21	s	RES, NETWORK 100K (3216)
RB110	1-233-576-11	s	RESISTOR,CHIP NETWORK 100
RB111	1-233-810-21	s	RES, NETWORK 100K (3216)
RB112	1-233-578-11	s	RESISTOR,CHIP NETWORK 47K
RB113	1-233-414-11	s	RESISTOR,CHIP NETWORK 4.7K
RB114	1-233-414-11	s	RESISTOR,CHIP NETWORK 4.7K
RB115	1-233-414-11	s	RESISTOR,CHIP NETWORK 4.7K
RB116	1-233-414-11	s	RESISTOR,CHIP NETWORK 4.7K
RB117	1-233-575-11	s	RES, CHIP NETWORK 22
RB118	1-233-575-11	s	RES, CHIP NETWORK 22
RB119	1-233-575-11	s	RES, CHIP NETWORK 22
RB120	1-233-575-11	s	RES, CHIP NETWORK 22
RB121	1-233-575-11	s	RES, CHIP NETWORK 22
RB122	1-233-575-11	s	RES, CHIP NETWORK 22
RB123	1-233-575-11	s	RES, CHIP NETWORK 22
RB124	1-233-575-11	s	RES, CHIP NETWORK 22
RB301	1-233-810-21	s	RES, NETWORK 100K (3216)
RB401	1-233-412-11	s	RESISTOR,CHIP NETWORK 1K

(VN-13 BOARD [SUFFIX 13-])

Ref. No. or Q'ty	Part No.	SP	Description
RB402	1-233-412-11	s	RESISTOR,CHIP NETWORK 1K
RB403	1-233-412-11	s	RESISTOR,CHIP NETWORK 1K
RB404	1-233-412-11	s	RESISTOR,CHIP NETWORK 1K
RB405	1-233-574-11	s	RESISTOR,CHIP NETWORK 10
RB406	1-233-412-11	s	RESISTOR,CHIP NETWORK 1K
RB407	1-233-412-11	s	RESISTOR,CHIP NETWORK 1K
RB408	1-233-412-11	s	RESISTOR,CHIP NETWORK 1K
RB409	1-234-523-21	s	RESISTOR,CHIP NETWORK
RB410	1-233-574-11	s	RESISTOR,CHIP NETWORK 10
RB411	1-233-574-11	s	RESISTOR,CHIP NETWORK 10
RB412	1-233-574-11	s	RESISTOR,CHIP NETWORK 10
RB413	1-233-574-11	s	RESISTOR,CHIP NETWORK 10
RB414	1-233-574-11	s	RESISTOR,CHIP NETWORK 10
RB415	1-233-574-11	s	RESISTOR,CHIP NETWORK 10
RB416	1-233-574-11	s	RESISTOR,CHIP NETWORK 10
RB417	1-233-574-11	s	RESISTOR,CHIP NETWORK 10
RB418	1-233-574-11	s	RESISTOR,CHIP NETWORK 10
RB419	1-233-574-11	s	RESISTOR,CHIP NETWORK 10
RB424	1-233-574-11	s	RESISTOR,CHIP NETWORK 10
RB425	1-233-574-11	s	RESISTOR,CHIP NETWORK 10
RB426	1-233-412-11	s	RESISTOR,CHIP NETWORK 1K
RB427	1-233-574-11	s	RESISTOR,CHIP NETWORK 10
RB428	1-233-574-11	s	RESISTOR,CHIP NETWORK 10
RB429	1-233-574-11	s	RESISTOR,CHIP NETWORK 10
RB430	1-233-574-11	s	RESISTOR,CHIP NETWORK 10
RB431	1-233-574-11	s	RESISTOR,CHIP NETWORK 10
RB432	1-233-574-11	s	RESISTOR,CHIP NETWORK 10
RB433	1-233-574-11	s	RESISTOR,CHIP NETWORK 10
RB434	1-233-574-11	s	RESISTOR,CHIP NETWORK 10
RB436	1-233-574-11	s	RESISTOR,CHIP NETWORK 10
RB437	1-233-574-11	s	RESISTOR,CHIP NETWORK 10
RB444	1-236-908-11	s	RESISTOR,NETWORK 10K (3216)
RB445	1-233-574-11	s	RESISTOR,CHIP NETWORK 10
RB446	1-233-574-11	s	RESISTOR,CHIP NETWORK 10
RB447	1-233-574-11	s	RESISTOR,CHIP NETWORK 10
RB503	1-233-574-11	s	RESISTOR,CHIP NETWORK 10
RB504	1-233-574-11	s	RESISTOR,CHIP NETWORK 10
RB505	1-233-574-11	s	RESISTOR,CHIP NETWORK 10
RB506	1-233-574-11	s	RESISTOR,CHIP NETWORK 10
RB507	1-233-574-11	s	RESISTOR,CHIP NETWORK 10
RB508	1-233-574-11	s	RESISTOR,CHIP NETWORK 10
RB509	1-233-574-11	s	RESISTOR,CHIP NETWORK 10
RB510	1-233-574-11	s	RESISTOR,CHIP NETWORK 10
RB511	1-233-574-11	s	RESISTOR,CHIP NETWORK 10
RB512	1-233-574-11	s	RESISTOR,CHIP NETWORK 10
RB513	1-233-574-11	s	RESISTOR,CHIP NETWORK 10
RB514	1-233-574-11	s	RESISTOR,CHIP NETWORK 10
RB515	1-233-574-11	s	RESISTOR,CHIP NETWORK 10
RB601	1-233-575-11	s	RES, CHIP NETWORK 22
RB602	1-233-575-11	s	RES, CHIP NETWORK 22
RB603	1-233-575-11	s	RES, CHIP NETWORK 22
RB604	1-233-575-11	s	RES, CHIP NETWORK 22
RB605	1-233-575-11	s	RES, CHIP NETWORK 22
RB606	1-233-575-11	s	RES, CHIP NETWORK 22
RB651	1-234-523-21	s	RESISTOR,CHIP NETWORK
RB652	1-234-523-21	s	RESISTOR,CHIP NETWORK
RB653	1-234-523-21	s	RESISTOR,CHIP NETWORK
RB654	1-234-523-21	s	RESISTOR,CHIP NETWORK
RB655	1-234-523-21	s	RESISTOR,CHIP NETWORK

(VN-13 BOARD [SUFFIX 13-])

Ref. No. or Q'ty	Part No.	SP	Description
RB656	1-234-523-21	s	RESISTOR,CHIP NETWORK
RB657	1-234-523-21	s	RESISTOR,CHIP NETWORK
RB658	1-234-523-21	s	RESISTOR,CHIP NETWORK
RB659	1-234-523-21	s	RESISTOR,CHIP NETWORK
RB660	1-234-523-21	s	RESISTOR,CHIP NETWORK
RB661	1-234-523-21	s	RESISTOR,CHIP NETWORK
RB662	1-234-523-21	s	RESISTOR,CHIP NETWORK
S101	1-692-271-31	s	SWITCH, SLIDE
S102	1-692-881-41	s	SWITCH, SLIDE
S104	1-771-721-11	s	SWITCH, TACTILE
S105	1-771-721-11	s	SWITCH, TACTILE
TP101	1-535-877-22	s	CHIP,CHECKER (TEST POINT)
TP102	1-535-877-22	s	CHIP,CHECKER (TEST POINT)
TP401	1-535-877-22	s	CHIP,CHECKER (TEST POINT)
TP402	1-535-877-22	s	CHIP,CHECKER (TEST POINT)
TP403	1-535-877-22	s	CHIP,CHECKER (TEST POINT)
TP404	1-535-877-22	s	CHIP,CHECKER (TEST POINT)
TP601	1-535-877-22	s	CHIP,CHECKER (TEST POINT)
TP602	1-535-877-22	s	CHIP,CHECKER (TEST POINT)
TP651	1-535-877-22	s	CHIP,CHECKER (TEST POINT)
X1	1-795-176-21	s	OSCILLATOR, CRYSTAL
X651	1-795-944-21	s	OSCILLATOR, CRYSTAL (SMD)
X701	1-813-065-11	s	VIBRATOR, CRYSTAL

VPR-64 BOARD [SUFFIX 15] for MSW RECORDER

[Lot No. 261 - 414] MSW-2000, M2000/P, A2000/P

*a: [Lot No. 261 -]
*b: [Lot No. 2A1 - 414]

Ref. No. or Q'ty	Part No.	SP	Description
1pc	A-8324-882-C	s	MOUNTED CIRCUIT BOARD, VPR-64
3pcs	3-191-747-11	o	SUPPORT (M3), HEXAGON
1pc	3-701-822-00	s	HOLDER, WIRE
6pcs	7-682-545-04	s	SCREW +B3X4
6pcs	7-682-902-11	s	SCREW +PWH 2.6X5
1pc	3-179-084-11	s	LEVER (R), C BOARD
1pc	3-179-085-11	s	LEVER (L), C BOARD
C100	1-164-156-11	s	CAPACITOR,CERAMIC 0.1MF/25V F
C102	1-164-156-11	s	CAPACITOR,CERAMIC 0.1MF/25V F
C103	1-164-156-11	s	CAPACITOR,CERAMIC 0.1MF/25V F
C104	1-131-999-11	s	CAPACITOR,SOLID ELECT 150MF
C105	1-131-999-11	s	CAPACITOR,SOLID ELECT 150MF
C106	1-164-156-11	s	CAPACITOR,CERAMIC 0.1MF/25V F
C107	1-164-156-11	s	CAPACITOR,CERAMIC 0.1MF/25V F
C108	1-162-970-11	s	CAPACITOR CERAMIC 0.01MF/25V B
C109	1-162-921-11	s	CAPACITOR,CERAMIC 33PF/50V CH
C110	1-162-923-11	s	CAPACITOR,CERAMIC 47PF/50V CH
C112	1-164-230-11	s	CAPACITOR,CERAMIC 220PF/50V
C113	1-164-156-11	s	CAPACITOR,CERAMIC 0.1MF/25V F
C114	1-164-156-11	s	CAPACITOR,CERAMIC 0.1MF/25V F
C119	1-164-156-11	s	CAPACITOR,CERAMIC 0.1MF/25V F
C120	1-164-156-11	s	CAPACITOR,CERAMIC 0.1MF/25V F
C121	1-164-156-11	s	CAPACITOR,CERAMIC 0.1MF/25V F
C122	1-119-751-11	s	CAPACITOR,TANTALUM 22MF/16V
C125	1-164-156-11	s	CAPACITOR,CERAMIC 0.1MF/25V F
C126	1-119-751-11	s	CAPACITOR,TANTALUM 22MF/16V
C127	1-164-156-11	s	CAPACITOR,CERAMIC 0.1MF/25V F
C129	1-164-156-11	s	CAPACITOR,CERAMIC 0.1MF/25V F
C130	1-164-156-11	s	CAPACITOR,CERAMIC 0.1MF/25V F
C132	1-164-156-11	s	CAPACITOR,CERAMIC 0.1MF/25V F
C133	1-164-156-11	s	CAPACITOR,CERAMIC 0.1MF/25V F
C134	1-113-986-11	s	CAPACITOR,TANTALUM 2.2MF/25V
C135	1-162-921-11	s	CAPACITOR,CERAMIC 33PF/50V CH
C136	1-164-156-11	s	CAPACITOR,CERAMIC 0.1MF/25V F
C137	1-164-156-11	s	CAPACITOR,CERAMIC 0.1MF/25V F
C138	1-164-230-11	s	CAPACITOR,CERAMIC 220PF/50V
C139	1-113-986-11	s	CAPACITOR,TANTALUM 2.2MF/25V
C140	1-164-156-11	s	CAPACITOR,CERAMIC 0.1MF/25V F
C141	1-164-156-11	s	CAPACITOR,CERAMIC 0.1MF/25V F
C142	1-164-156-11	s	CAPACITOR,CERAMIC 0.1MF/25V F
C143	1-164-156-11	s	CAPACITOR,CERAMIC 0.1MF/25V F
C144	1-115-416-11	s	CAPACITOR,CERAMIC 1000PF/25V
C145	1-164-156-11	s	CAPACITOR,CERAMIC 0.1MF/25V F
C146	1-164-315-11	s	CAPACITOR,CERAMIC 470PF/50V CH
C147	1-115-416-11	s	CAPACITOR,CERAMIC 1000PF/25V
C148	1-115-416-11	s	CAPACITOR,CERAMIC 1000PF/25V
C149	1-164-315-11	s	CAPACITOR,CERAMIC 470PF/50V CH
C150	1-164-156-11	s	CAPACITOR,CERAMIC 0.1MF/25V F
C151	1-162-927-11	s	CAPACITOR,CERAMIC 100PF/50V CH
C152	1-162-927-11	s	CAPACITOR,CERAMIC 100PF/50V CH
C154	1-164-230-11	s	CAPACITOR,CERAMIC 220PF/50V
C155	1-164-230-11	s	CAPACITOR,CERAMIC 220PF/50V
C156	1-164-156-11	s	CAPACITOR,CERAMIC 0.1MF/25V F
C158	1-164-156-11	s	CAPACITOR,CERAMIC 0.1MF/25V F

(VPR-64 BOARD [SUFFIX 15] for MSW RECORDER)

Ref. No. or Q'ty	Part No.	SP	Description
C160	1-164-156-11	s	CAPACITOR,CERAMIC 0.1MF/25V F
C161	1-164-156-11	s	CAPACITOR,CERAMIC 0.1MF/25V F
C162	1-164-156-11	s	CAPACITOR,CERAMIC 0.1MF/25V F
C166	1-164-156-11	s	CAPACITOR,CERAMIC 0.1MF/25V F
C167	1-164-156-11	s	CAPACITOR,CERAMIC 0.1MF/25V F
C168	1-164-156-11	s	CAPACITOR,CERAMIC 0.1MF/25V F
C170	1-164-156-11	s	CAPACITOR,CERAMIC 0.1MF/25V F
C171	1-164-156-11	s	CAPACITOR,CERAMIC 0.1MF/25V F
C172	1-164-156-11	s	CAPACITOR,CERAMIC 0.1MF/25V F
C175	1-119-751-11	s	CAPACITOR,TANTALUM 22MF/16V
C176	1-164-156-11	s	CAPACITOR,CERAMIC 0.1MF/25V F
C177	1-164-156-11	s	CAPACITOR,CERAMIC 0.1MF/25V F
C178	1-164-156-11	s	CAPACITOR,CERAMIC 0.1MF/25V F
C179	1-164-156-11	s	CAPACITOR,CERAMIC 0.1MF/25V F
C180	1-115-416-11	s	CAPACITOR,CERAMIC 1000PF/25V
C181	1-115-416-11	s	CAPACITOR,CERAMIC 1000PF/25V
C182	1-119-751-11	s	CAPACITOR,TANTALUM 22MF/16V
C183	1-164-156-11	s	CAPACITOR,CERAMIC 0.1MF/25V F
C185	1-162-970-11	s	CAPACITOR CERAMIC 0.01MF/25V B
C186	1-164-156-11	s	CAPACITOR,CERAMIC 0.1MF/25V F
C187	1-164-156-11	s	CAPACITOR,CERAMIC 0.1MF/25V F
C189	1-164-156-11	s	CAPACITOR,CERAMIC 0.1MF/25V F
C191	1-113-985-11	s	CAPACITOR,TANTALUM 10MF/20V
C192	1-119-662-11	s	CAPACITOR,CERAMIC 150PF (1608)
C193	1-119-751-11	s	CAPACITOR,TANTALUM 22MF/16V
C195	1-119-751-11	s	CAPACITOR,TANTALUM 22MF/16V
C196	1-164-156-11	s	CAPACITOR,CERAMIC 0.1MF/25V F
C197	1-164-156-11	s	CAPACITOR,CERAMIC 0.1MF/25V F
C198	1-164-156-11	s	CAPACITOR,CERAMIC 0.1MF/25V F
C199	1-164-156-11	s	CAPACITOR,CERAMIC 0.1MF/25V F
C201	1-164-156-11	s	CAPACITOR,CERAMIC 0.1MF/25V F
C202	1-164-156-11	s	CAPACITOR,CERAMIC 0.1MF/25V F
C203	1-164-156-11	s	CAPACITOR,CERAMIC 0.1MF/25V F
C207	1-164-156-11	s	CAPACITOR,CERAMIC 0.1MF/25V F
C208	1-164-156-11	s	CAPACITOR,CERAMIC 0.1MF/25V F
C209	1-164-156-11	s	CAPACITOR,CERAMIC 0.1MF/25V F
C210	1-164-156-11	s	CAPACITOR,CERAMIC 0.1MF/25V F
C212	1-164-156-11	s	CAPACITOR,CERAMIC 0.1MF/25V F
C213	1-164-156-11	s	CAPACITOR,CERAMIC 0.1MF/25V F
C214	1-164-156-11	s	CAPACITOR,CERAMIC 0.1MF/25V F
C215	1-164-156-11	s	CAPACITOR,CERAMIC 0.1MF/25V F
C216	1-164-156-11	s	CAPACITOR,CERAMIC 0.1MF/25V F
C217	1-164-156-11	s	CAPACITOR,CERAMIC 0.1MF/25V F
C219	1-115-416-11	s	CAPACITOR,CERAMIC 1000PF/25V
C220	1-164-156-11	s	CAPACITOR,CERAMIC 0.1MF/25V F
C222	1-104-851-11	s	CAPACITOR,TANTALUM 10MF/10V
C223	1-164-156-11	s	CAPACITOR,CERAMIC 0.1MF/25V F
C224	1-131-999-11	s	CAPACITOR,SOLID ELECT 150MF
C225	1-164-156-11	s	CAPACITOR,CERAMIC 0.1MF/25V F
C226	1-164-156-11	s	CAPACITOR,CERAMIC 0.1MF/25V F
C227	1-164-460-11	s	CAPACITOR, CERAMIC 62PF/50V
C228	1-164-238-11	s	CAPACITOR,CERAMIC 36PF/50V CH
C229	1-164-378-11	s	CAPACITOR CERAMIC 30PF/50V CH
C230	1-162-915-11	s	CAPACITOR,CERAMIC 10PF/50V CH
C231	1-164-460-11	s	CAPACITOR, CERAMIC 62PF/50V
C232	1-162-921-11	s	CAPACITOR,CERAMIC 33PF/50V CH
C233	1-164-460-11	s	CAPACITOR, CERAMIC 62PF/50V
C234	1-162-927-11	s	CAPACITOR,CERAMIC 100PF/50V CH
C302	1-111-253-11	s	CAPACITOR TANTALUM 100MF/6.3V

(VPR-64 BOARD [SUFFIX 15] for MSW RECORDER)

Ref. No. or Q'ty	Part No.	SP	Description
C303	1-164-156-11	s	CAPACITOR,CERAMIC 0.1MF/25V F
C305	1-164-156-11	s	CAPACITOR,CERAMIC 0.1MF/25V F
C307	1-164-156-11	s	CAPACITOR,CERAMIC 0.1MF/25V F
C309	1-164-156-11	s	CAPACITOR,CERAMIC 0.1MF/25V F
C311	1-164-156-11	s	CAPACITOR,CERAMIC 0.1MF/25V F
C313	1-164-156-11	s	CAPACITOR,CERAMIC 0.1MF/25V F
C314	1-164-156-11	s	CAPACITOR,CERAMIC 0.1MF/25V F
C315	1-164-156-11	s	CAPACITOR,CERAMIC 0.1MF/25V F
C316	1-115-467-11	s	CAPACITOR CERAMIC 0.22MF/10V B
C317	1-164-156-11	s	CAPACITOR,CERAMIC 0.1MF/25V F
C318	1-164-156-11	s	CAPACITOR,CERAMIC 0.1MF/25V F
C320	1-164-156-11	s	CAPACITOR,CERAMIC 0.1MF/25V F
C321	1-164-156-11	s	CAPACITOR,CERAMIC 0.1MF/25V F
C322	1-162-970-11	s	CAPACITOR CERAMIC 0.01MF/25V B
C325	1-164-156-11	s	CAPACITOR,CERAMIC 0.1MF/25V F
C326	1-164-156-11	s	CAPACITOR,CERAMIC 0.1MF/25V F
C327	1-164-156-11	s	CAPACITOR,CERAMIC 0.1MF/25V F
C328	1-164-156-11	s	CAPACITOR,CERAMIC 0.1MF/25V F
C330	1-164-156-11	s	CAPACITOR,CERAMIC 0.1MF/25V F
C333	1-164-156-11	s	CAPACITOR,CERAMIC 0.1MF/25V F
C335	1-107-686-11	s	CAPACITOR,TANTALUM 4.7MF/16V
C336	1-164-156-11	s	CAPACITOR,CERAMIC 0.1MF/25V F
C337	1-162-925-11	s	CAPACITOR,CERAMIC 68PF/50V CH
C338	1-111-253-11	s	CAPACITOR TANTALUM 100MF/6.3V
C339	1-164-156-11	s	CAPACITOR,CERAMIC 0.1MF/25V F
C340	1-164-156-11	s	CAPACITOR,CERAMIC 0.1MF/25V F
C341	1-164-156-11	s	CAPACITOR,CERAMIC 0.1MF/25V F
C342	1-164-156-11	s	CAPACITOR,CERAMIC 0.1MF/25V F
C344	1-164-156-11	s	CAPACITOR,CERAMIC 0.1MF/25V F
C346	1-164-156-11	s	CAPACITOR,CERAMIC 0.1MF/25V F
C348	1-164-156-11	s	CAPACITOR,CERAMIC 0.1MF/25V F
C350	1-164-156-11	s	CAPACITOR,CERAMIC 0.1MF/25V F
C352	1-164-156-11	s	CAPACITOR,CERAMIC 0.1MF/25V F
C356	1-164-156-11	s	CAPACITOR,CERAMIC 0.1MF/25V F
C358	1-162-927-11	s	CAPACITOR,CERAMIC 100PF/50V CH
C359	1-164-156-11	s	CAPACITOR,CERAMIC 0.1MF/25V F
C360	1-107-686-11	s	CAPACITOR,TANTALUM 4.7MF/16V
C361	1-107-686-11	s	CAPACITOR,TANTALUM 4.7MF/16V
C362	1-164-156-11	s	CAPACITOR,CERAMIC 0.1MF/25V F
C364	1-164-156-11	s	CAPACITOR,CERAMIC 0.1MF/25V F
C365	1-113-986-11	s	CAPACITOR,TANTALUM 2.2MF/25V
C366	1-135-070-00	s	CAPACITOR TANTALUM 0.1MF/35V
C367	1-162-927-11	s	CAPACITOR,CERAMIC 100PF/50V CH
C503	1-164-156-11	s	CAPACITOR,CERAMIC 0.1MF/25V F
C504	1-164-156-11	s	CAPACITOR,CERAMIC 0.1MF/25V F
C506	1-164-156-11	s	CAPACITOR,CERAMIC 0.1MF/25V F
C507	1-162-917-11	s	CAPACITOR,CERAMIC 15PF/50V CH
C509	1-162-926-11	s	CAPACITOR,CERAMIC 82PF/50V CH
C510	1-164-156-11	s	CAPACITOR,CERAMIC 0.1MF/25V F
C511	1-164-156-11	s	CAPACITOR,CERAMIC 0.1MF/25V F
C512	1-164-156-11	s	CAPACITOR,CERAMIC 0.1MF/25V F
C513	1-164-156-11	s	CAPACITOR,CERAMIC 0.1MF/25V F
C514	1-164-156-11	s	CAPACITOR,CERAMIC 0.1MF/25V F
C515	1-164-156-11	s	CAPACITOR,CERAMIC 0.1MF/25V F
C516	1-164-156-11	s	CAPACITOR,CERAMIC 0.1MF/25V F
C517	1-164-315-11	s	CAPACITOR,CERAMIC 470PF/50V CH
C518	1-162-926-11	s	CAPACITOR,CERAMIC 82PF/50V CH
C519	1-162-928-11	s	CAPACITOR,CERAMIC 120PF/50V CH
C520	1-162-923-11	s	CAPACITOR,CERAMIC 47PF/50V CH

(VPR-64 BOARD [SUFFIX 15] for MSW RECORDER)

Ref. No. or Q'ty	Part No.	SP	Description
C521	1-162-923-11	s	CAPACITOR,CERAMIC 47PF/50V CH
C522	1-164-230-11	s	CAPACITOR,CERAMIC 220PF/50V
C523	1-164-230-11	s	CAPACITOR,CERAMIC 220PF/50V
C524	1-162-923-11	s	CAPACITOR,CERAMIC 47PF/50V CH
C528	1-162-970-11	s	CAPACITOR CERAMIC 0.01MF/25V B
C537	1-127-954-11	s	CAPACITOR,CHIP FILM 0.047MF
C538	1-164-156-11	s	CAPACITOR,CERAMIC 0.1MF/25V F
C539	1-164-156-11	s	CAPACITOR,CERAMIC 0.1MF/25V F
C540	1-164-156-11	s	CAPACITOR,CERAMIC 0.1MF/25V F
C541	1-135-070-00	s	CAPACITOR TANTALUM 0.1MF/35V
C542	1-135-070-00	s	CAPACITOR TANTALUM 0.1MF/35V
C543	1-135-070-00	s	CAPACITOR TANTALUM 0.1MF/35V
C544	1-164-156-11	s	CAPACITOR,CERAMIC 0.1MF/25V F
C545	1-164-156-11	s	CAPACITOR,CERAMIC 0.1MF/25V F
C546	1-135-072-21	s	CAPACITOR,TANTALUM 0.22MF/35V
C547	1-135-072-21	s	CAPACITOR,TANTALUM 0.22MF/35V
C548	1-135-072-21	s	CAPACITOR,TANTALUM 0.22MF/35V
C549	1-164-156-11	s	CAPACITOR,CERAMIC 0.1MF/25V F
C550	1-162-928-11	s	CAPACITOR,CERAMIC 120PF/50V CH
C551	1-164-156-11	s	CAPACITOR,CERAMIC 0.1MF/25V F
C552	1-164-156-11	s	CAPACITOR,CERAMIC 0.1MF/25V F
C553	1-164-156-11	s	CAPACITOR,CERAMIC 0.1MF/25V F
C554	1-164-156-11	s	CAPACITOR,CERAMIC 0.1MF/25V F
C555	1-164-156-11	s	CAPACITOR,CERAMIC 0.1MF/25V F
C556	1-164-156-11	s	CAPACITOR,CERAMIC 0.1MF/25V F
C557	1-164-156-11	s	CAPACITOR,CERAMIC 0.1MF/25V F
C558	1-104-851-11	s	CAPACITOR,TANTALUM 10MF/10V
C559	1-104-851-11	s	CAPACITOR,TANTALUM 10MF/10V
C560	1-104-851-11	s	CAPACITOR,TANTALUM 10MF/10V
C562	1-164-156-11	s	CAPACITOR,CERAMIC 0.1MF/25V F
C564	1-119-751-11	s	CAPACITOR,TANTALUM 22MF/16V
C565	1-164-156-11	s	CAPACITOR,CERAMIC 0.1MF/25V F
C566	1-164-156-11	s	CAPACITOR,CERAMIC 0.1MF/25V F
C567	1-164-156-11	s	CAPACITOR,CERAMIC 0.1MF/25V F
C568	1-164-156-11	s	CAPACITOR,CERAMIC 0.1MF/25V F
C569	1-162-927-11	s	CAPACITOR,CERAMIC 100PF/50V CH
C570	1-162-927-11	s	CAPACITOR,CERAMIC 100PF/50V CH
C573	1-162-970-11	s	CAPACITOR CERAMIC 0.01MF/25V B
C576	1-162-970-11	s	CAPACITOR CERAMIC 0.01MF/25V B
C577	1-119-751-11	s	CAPACITOR,TANTALUM 22MF/16V
C578	1-119-751-11	s	CAPACITOR,TANTALUM 22MF/16V
C579	1-119-751-11	s	CAPACITOR,TANTALUM 22MF/16V
C580	1-119-751-11	s	CAPACITOR,TANTALUM 22MF/16V
C581	1-162-923-11	s	CAPACITOR,CERAMIC 47PF/50V CH
C582	1-162-923-11	s	CAPACITOR,CERAMIC 47PF/50V CH
C583	1-164-156-11	s	CAPACITOR,CERAMIC 0.1MF/25V F
C584	1-164-156-11	s	CAPACITOR,CERAMIC 0.1MF/25V F
C585	1-164-156-11	s	CAPACITOR,CERAMIC 0.1MF/25V F
C586	1-164-156-11	s	CAPACITOR,CERAMIC 0.1MF/25V F
C589	1-119-751-11	s	CAPACITOR,TANTALUM 22MF/16V
C590	1-164-156-11	s	CAPACITOR,CERAMIC 0.1MF/25V F
C593	1-119-751-11	s	CAPACITOR,TANTALUM 22MF/16V
C594	1-119-751-11	s	CAPACITOR,TANTALUM 22MF/16V
C595	1-164-156-11	s	CAPACITOR,CERAMIC 0.1MF/25V F
C596	1-164-156-11	s	CAPACITOR,CERAMIC 0.1MF/25V F
C597	1-162-923-11	s	CAPACITOR,CERAMIC 47PF/50V CH
C598	1-164-156-11	s	CAPACITOR,CERAMIC 0.1MF/25V F
C599	1-164-156-11	s	CAPACITOR,CERAMIC 0.1MF/25V F
C600	1-164-156-11	s	CAPACITOR,CERAMIC 0.1MF/25V F

(VPR-64 BOARD [SUFFIX 15] for MSW RECORDER)

Ref. No. or Q'ty	Part No.	SP	Description
C601	1-164-156-11	s	CAPACITOR,CERAMIC 0.1MF/25V F
C602	1-164-156-11	s	CAPACITOR,CERAMIC 0.1MF/25V F
C603	1-131-999-11	s	CAPACITOR,SOLID ELECT 150MF
C604	1-164-156-11	s	CAPACITOR,CERAMIC 0.1MF/25V F
C606	1-131-999-11	s	CAPACITOR,SOLID ELECT 150MF
C609	1-128-392-11	s	CAPACITOR,ELECT 470MF/6.3V
C610	1-164-156-11	s	CAPACITOR,CERAMIC 0.1MF/25V F
C611	1-164-156-11	s	CAPACITOR,CERAMIC 0.1MF/25V F
C612	1-164-156-11	s	CAPACITOR,CERAMIC 0.1MF/25V F
C613	1-164-156-11	s	CAPACITOR,CERAMIC 0.1MF/25V F
C614	1-164-156-11	s	CAPACITOR,CERAMIC 0.1MF/25V F
C700	1-164-156-11	s	CAPACITOR,CERAMIC 0.1MF/25V F
C701	1-164-156-11	s	CAPACITOR,CERAMIC 0.1MF/25V F
C702	1-164-156-11	s	CAPACITOR,CERAMIC 0.1MF/25V F
C703	1-164-156-11	s	CAPACITOR,CERAMIC 0.1MF/25V F
C704	1-164-156-11	s	CAPACITOR,CERAMIC 0.1MF/25V F
C714	1-164-156-11	s	CAPACITOR,CERAMIC 0.1MF/25V F
C715	1-164-156-11	s	CAPACITOR,CERAMIC 0.1MF/25V F
C716	1-164-156-11	s	CAPACITOR,CERAMIC 0.1MF/25V F
C717	1-164-156-11	s	CAPACITOR,CERAMIC 0.1MF/25V F
C718	1-164-156-11	s	CAPACITOR,CERAMIC 0.1MF/25V F
C719	1-164-156-11	s	CAPACITOR,CERAMIC 0.1MF/25V F
C720	1-164-156-11	s	CAPACITOR,CERAMIC 0.1MF/25V F
C721	1-164-156-11	s	CAPACITOR,CERAMIC 0.1MF/25V F
C722	1-164-156-11	s	CAPACITOR,CERAMIC 0.1MF/25V F
C723	1-164-156-11	s	CAPACITOR,CERAMIC 0.1MF/25V F
C724	1-164-156-11	s	CAPACITOR,CERAMIC 0.1MF/25V F
C725	1-164-156-11	s	CAPACITOR,CERAMIC 0.1MF/25V F
C726	1-164-156-11	s	CAPACITOR,CERAMIC 0.1MF/25V F
C727	1-164-156-11	s	CAPACITOR,CERAMIC 0.1MF/25V F
C728	1-164-156-11	s	CAPACITOR,CERAMIC 0.1MF/25V F
C729	1-164-156-11	s	CAPACITOR,CERAMIC 0.1MF/25V F
C730	1-164-156-11	s	CAPACITOR,CERAMIC 0.1MF/25V F
C731	1-164-156-11	s	CAPACITOR,CERAMIC 0.1MF/25V F
C732	1-164-156-11	s	CAPACITOR,CERAMIC 0.1MF/25V F
C733	1-164-156-11	s	CAPACITOR,CERAMIC 0.1MF/25V F
C734	1-164-156-11	s	CAPACITOR,CERAMIC 0.1MF/25V F
C735	1-164-156-11	s	CAPACITOR,CERAMIC 0.1MF/25V F
C736	1-107-686-11	s	CAPACITOR,TANTALUM 4.7MF/16V
C739	1-111-253-11	s	CAPACITOR TANTALUM 100MF/6.3V
C751	1-164-156-11	s	CAPACITOR,CERAMIC 0.1MF/25V F
C752	1-164-156-11	s	CAPACITOR,CERAMIC 0.1MF/25V F
C753	1-164-156-11	s	CAPACITOR,CERAMIC 0.1MF/25V F
C754	1-164-156-11	s	CAPACITOR,CERAMIC 0.1MF/25V F
C755	1-164-156-11	s	CAPACITOR,CERAMIC 0.1MF/25V F
C756	1-164-156-11	s	CAPACITOR,CERAMIC 0.1MF/25V F
C790	1-164-156-11	s	CAPACITOR,CERAMIC 0.1MF/25V F
C791	1-164-156-11	s	CAPACITOR,CERAMIC 0.1MF/25V F
C792	1-164-156-11	s	CAPACITOR,CERAMIC 0.1MF/25V F
C793	1-164-156-11	s	CAPACITOR,CERAMIC 0.1MF/25V F
C794	1-164-156-11	s	CAPACITOR,CERAMIC 0.1MF/25V F
C795	1-164-156-11	s	CAPACITOR,CERAMIC 0.1MF/25V F
C796	1-164-156-11	s	CAPACITOR,CERAMIC 0.1MF/25V F
C797	1-164-156-11	s	CAPACITOR,CERAMIC 0.1MF/25V F
C800	1-164-156-11	s	CAPACITOR,CERAMIC 0.1MF/25V F
C801	1-164-156-11	s	CAPACITOR,CERAMIC 0.1MF/25V F
C802	1-164-156-11	s	CAPACITOR,CERAMIC 0.1MF/25V F
C803	1-164-156-11	s	CAPACITOR,CERAMIC 0.1MF/25V F
C804	1-164-156-11	s	CAPACITOR,CERAMIC 0.1MF/25V F

(VPR-64 BOARD [SUFFIX 15] for MSW RECORDER)

Ref. No. or Q'ty	Part No.	SP	Description
C805	1-164-156-11	s	CAPACITOR,CERAMIC 0.1MF/25V F
C806	1-164-156-11	s	CAPACITOR,CERAMIC 0.1MF/25V F
C807	1-164-156-11	s	CAPACITOR,CERAMIC 0.1MF/25V F
C808	1-164-156-11	s	CAPACITOR,CERAMIC 0.1MF/25V F
C809	1-164-156-11	s	CAPACITOR,CERAMIC 0.1MF/25V F
C810	1-164-156-11	s	CAPACITOR,CERAMIC 0.1MF/25V F
C811	1-164-156-11	s	CAPACITOR,CERAMIC 0.1MF/25V F
C812	1-164-156-11	s	CAPACITOR,CERAMIC 0.1MF/25V F
C813	1-164-156-11	s	CAPACITOR,CERAMIC 0.1MF/25V F
C814	1-164-156-11	s	CAPACITOR,CERAMIC 0.1MF/25V F
C815	1-164-156-11	s	CAPACITOR,CERAMIC 0.1MF/25V F
C816	1-164-156-11	s	CAPACITOR,CERAMIC 0.1MF/25V F
C817	1-164-156-11	s	CAPACITOR,CERAMIC 0.1MF/25V F
C818	1-164-156-11	s	CAPACITOR,CERAMIC 0.1MF/25V F
C819	1-164-156-11	s	CAPACITOR,CERAMIC 0.1MF/25V F
C820	1-164-156-11	s	CAPACITOR,CERAMIC 0.1MF/25V F
C821	1-164-156-11	s	CAPACITOR,CERAMIC 0.1MF/25V F
C822	1-164-156-11	s	CAPACITOR,CERAMIC 0.1MF/25V F
C823	1-164-156-11	s	CAPACITOR,CERAMIC 0.1MF/25V F
C824	1-164-156-11	s	CAPACITOR,CERAMIC 0.1MF/25V F
C825	1-164-156-11	s	CAPACITOR,CERAMIC 0.1MF/25V F
C826	1-164-156-11	s	CAPACITOR,CERAMIC 0.1MF/25V F
C827	1-164-156-11	s	CAPACITOR,CERAMIC 0.1MF/25V F
C828	1-164-156-11	s	CAPACITOR,CERAMIC 0.1MF/25V F
C829	1-164-156-11	s	CAPACITOR,CERAMIC 0.1MF/25V F
C838	1-164-156-11	s	CAPACITOR,CERAMIC 0.1MF/25V F
C839	1-164-156-11	s	CAPACITOR,CERAMIC 0.1MF/25V F
C840	1-164-156-11	s	CAPACITOR,CERAMIC 0.1MF/25V F
C849	1-164-156-11	s	CAPACITOR,CERAMIC 0.1MF/25V F
C850	1-164-156-11	s	CAPACITOR,CERAMIC 0.1MF/25V F
C851	1-164-156-11	s	CAPACITOR,CERAMIC 0.1MF/25V F
C852	1-164-156-11	s	CAPACITOR,CERAMIC 0.1MF/25V F
C853	1-164-156-11	s	CAPACITOR,CERAMIC 0.1MF/25V F
C854	1-164-156-11	s	CAPACITOR,CERAMIC 0.1MF/25V F
C855	1-164-156-11	s	CAPACITOR,CERAMIC 0.1MF/25V F
C856	1-164-156-11	s	CAPACITOR,CERAMIC 0.1MF/25V F
C857	1-164-156-11	s	CAPACITOR,CERAMIC 0.1MF/25V F
C858	1-164-156-11	s	CAPACITOR,CERAMIC 0.1MF/25V F
C859	1-164-156-11	s	CAPACITOR,CERAMIC 0.1MF/25V F
C860	1-164-156-11	s	CAPACITOR,CERAMIC 0.1MF/25V F
C901	1-107-686-11	s	CAPACITOR,TANTALUM 4.7MF/16V
C903	1-162-925-11	s	CAPACITOR,CERAMIC 68PF/50V CH
C904	1-111-253-11	s	CAPACITOR TANTALUM 100MF/6.3V
C905	1-111-253-11	s	CAPACITOR TANTALUM 100MF/6.3V
C907	1-164-156-11	s	CAPACITOR,CERAMIC 0.1MF/25V F
C908	1-164-156-11	s	CAPACITOR,CERAMIC 0.1MF/25V F
C911	1-164-156-11	s	CAPACITOR,CERAMIC 0.1MF/25V F
C912	1-164-156-11	s	CAPACITOR,CERAMIC 0.1MF/25V F
C915	1-164-156-11	s	CAPACITOR,CERAMIC 0.1MF/25V F
C916	1-164-156-11	s	CAPACITOR,CERAMIC 0.1MF/25V F
C917	1-164-156-11	s	CAPACITOR,CERAMIC 0.1MF/25V F
C918	1-164-156-11	s	CAPACITOR,CERAMIC 0.1MF/25V F
C919	1-164-156-11	s	CAPACITOR,CERAMIC 0.1MF/25V F
C921	1-164-156-11	s	CAPACITOR,CERAMIC 0.1MF/25V F
C923	1-164-156-11	s	CAPACITOR,CERAMIC 0.1MF/25V F
C924	1-164-156-11	s	CAPACITOR,CERAMIC 0.1MF/25V F
C925	1-164-156-11	s	CAPACITOR,CERAMIC 0.1MF/25V F
C926	1-164-156-11	s	CAPACITOR,CERAMIC 0.1MF/25V F
C927	1-164-156-11	s	CAPACITOR,CERAMIC 0.1MF/25V F

(VPR-64 BOARD [SUFFIX 15] for MSW RECORDER)

Ref. No. or Q'ty	Part No.	SP	Description
C928	1-164-156-11	s	CAPACITOR,CERAMIC 0.1MF/25V F
C929	1-119-751-11	s	CAPACITOR,TANTALUM 22MF/16V
C930	1-164-156-11	s	CAPACITOR,CERAMIC 0.1MF/25V F
C931	1-164-156-11	s	CAPACITOR,CERAMIC 0.1MF/25V F
C932	1-165-849-11	s	CAPACITOR,TANTALUM ELECT 100MF
C935	1-164-156-11	s	CAPACITOR,CERAMIC 0.1MF/25V F
C937	1-107-686-11	s	CAPACITOR,TANTALUM 4.7MF/16V
C938	1-164-156-11	s	CAPACITOR,CERAMIC 0.1MF/25V F
C940	1-164-156-11	s	CAPACITOR,CERAMIC 0.1MF/25V F
C942	1-164-156-11	s	CAPACITOR,CERAMIC 0.1MF/25V F
C944	1-164-156-11	s	CAPACITOR,CERAMIC 0.1MF/25V F
C945	1-164-156-11	s	CAPACITOR,CERAMIC 0.1MF/25V F
C947	1-119-751-11	s	CAPACITOR,TANTALUM 22MF/16V
C948	1-164-156-11	s	CAPACITOR,CERAMIC 0.1MF/25V F
C950	1-113-985-11	s	CAPACITOR,TANTALUM 10MF/20V
C952	1-164-156-11	s	CAPACITOR,CERAMIC 0.1MF/25V F
C953	1-113-985-11	s	CAPACITOR,TANTALUM 10MF/20V
C955	1-164-156-11	s	CAPACITOR,CERAMIC 0.1MF/25V F
C956	1-164-156-11	s	CAPACITOR,CERAMIC 0.1MF/25V F
C959	1-165-849-11	s	CAPACITOR,TANTALUM ELECT 100MF
C960	1-164-156-11	s	CAPACITOR,CERAMIC 0.1MF/25V F
C961	1-164-156-11	s	CAPACITOR,CERAMIC 0.1MF/25V F
C962	1-164-156-11	s	CAPACITOR,CERAMIC 0.1MF/25V F
C963	1-164-156-11	s	CAPACITOR,CERAMIC 0.1MF/25V F
C964	1-164-156-11	s	CAPACITOR,CERAMIC 0.1MF/25V F
C968	1-164-156-11	s	CAPACITOR,CERAMIC 0.1MF/25V F
C969	1-164-156-11	s	CAPACITOR,CERAMIC 0.1MF/25V F
C970	1-164-156-11	s	CAPACITOR,CERAMIC 0.1MF/25V F
C971	1-164-156-11	s	CAPACITOR,CERAMIC 0.1MF/25V F
C972	1-164-156-11	s	CAPACITOR,CERAMIC 0.1MF/25V F
C973	1-165-849-11	s	CAPACITOR,TANTALUM ELECT 100MF
C974	1-165-849-11	s	CAPACITOR,TANTALUM ELECT 100MF
C975	1-165-849-11	s	CAPACITOR,TANTALUM ELECT 100MF
C976	1-164-156-11	s	CAPACITOR,CERAMIC 0.1MF/25V F
C977	1-164-156-11	s	CAPACITOR,CERAMIC 0.1MF/25V F
C978	1-164-156-11	s	CAPACITOR,CERAMIC 0.1MF/25V F
C979	1-162-965-11	s	CAPACITOR,CERAMIC 1500PF/50V B
C980	1-162-965-11	s	CAPACITOR,CERAMIC 1500PF/50V B
C981	1-162-914-11	s	CAPACITOR,CERAMIC 9PF/50V 1608
C982	1-162-914-11	s	CAPACITOR,CERAMIC 9PF/50V 1608
C983	1-162-965-11	s	CAPACITOR,CERAMIC 1500PF/50V B
C984	1-164-218-11	s	CAPACITOR,CERAMIC 180PF/50V CH
C985	1-162-965-11	s	CAPACITOR,CERAMIC 1500PF/50V B
C986	1-164-218-11	s	CAPACITOR,CERAMIC 180PF/50V CH
C987	1-162-908-11	s	CAPACITOR,CERAMIC 3PF/50V 1608
C988	1-162-908-11	s	CAPACITOR,CERAMIC 3PF/50V 1608
C989	1-162-908-11	s	CAPACITOR,CERAMIC 3PF/50V 1608
C990	1-162-909-11	s	CAPACITOR,CERAMIC 4PF/50V CH
C991	1-164-156-11	s	CAPACITOR,CERAMIC 0.1MF/25V F
C992	1-162-910-11	s	CAPACITOR,CERAMIC 5PF/50V 1608
C996	1-164-156-11	s	CAPACITOR,CERAMIC 0.1MF/25V F
C997	1-164-156-11	s	CAPACITOR,CERAMIC 0.1MF/25V F
C998	1-164-156-11	s	CAPACITOR,CERAMIC 0.1MF/25V F
C999	1-164-156-11	s	CAPACITOR,CERAMIC 0.1MF/25V F
C1000	1-164-156-11	s	CAPACITOR,CERAMIC 0.1MF/25V F
C1001	1-164-156-11	s	CAPACITOR,CERAMIC 0.1MF/25V F
C1002	1-164-156-11	s	CAPACITOR,CERAMIC 0.1MF/25V F
C1003	1-164-156-11	s	CAPACITOR,CERAMIC 0.1MF/25V F
C1004	1-162-923-11	s	CAPACITOR,CERAMIC 47PF/50V CH

(VPR-64 BOARD [SUFFIX 15] for MSW RECORDER)

Ref. No. or Q'ty	Part No.	SP	Description
C1005	1-107-686-11	s	CAPACITOR,TANTALUM 4.7MF/16V
C1006	1-107-686-11	s	CAPACITOR,TANTALUM 4.7MF/16V
C1007	1-107-686-11	s	CAPACITOR,TANTALUM 4.7MF/16V
C1008	1-107-686-11	s	CAPACITOR,TANTALUM 4.7MF/16V
C1009	1-107-686-11	s	CAPACITOR,TANTALUM 4.7MF/16V
C1010	1-107-686-11	s	CAPACITOR,TANTALUM 4.7MF/16V
C1011	1-107-686-11	s	CAPACITOR,TANTALUM 4.7MF/16V
C1012	1-107-686-11	s	CAPACITOR,TANTALUM 4.7MF/16V
C1014	1-162-927-11	s	CAPACITOR,CERAMIC 100PF/50V CH
C1015	1-107-689-21	s	CAPACITOR,TANTALUM 1MF/35V
C1016	1-107-689-21	s	CAPACITOR,TANTALUM 1MF/35V
C1017	1-107-689-21	s	CAPACITOR,TANTALUM 1MF/35V
C1018	1-107-689-21	s	CAPACITOR,TANTALUM 1MF/35V
C1019	1-162-910-11	s	CAPACITOR,CERAMIC 5PF/50V 1608
C1028	1-162-923-11	s	CAPACITOR,CERAMIC 47PF/50V CH
C1037	1-162-915-11	s	CAPACITOR,CERAMIC 10PF/50V CH
C1038	1-162-910-11	s	CAPACITOR,CERAMIC 5PF/50V 1608
C1039	1-164-156-11	s	CAPACITOR,CERAMIC 0.1MF/25V F
C1040	1-164-156-11	s	CAPACITOR,CERAMIC 0.1MF/25V F
C1041	1-162-910-11	s	CAPACITOR,CERAMIC 5PF/50V 1608
C1045	1-164-156-11	s	CAPACITOR,CERAMIC 0.1MF/25V F
C1046	1-164-156-11	s	CAPACITOR,CERAMIC 0.1MF/25V F
C1047	1-164-156-11	s	CAPACITOR,CERAMIC 0.1MF/25V F
C1048	1-164-156-11	s	CAPACITOR,CERAMIC 0.1MF/25V F
C1049	1-164-156-11	s	CAPACITOR,CERAMIC 0.1MF/25V F
C1050	1-164-156-11	s	CAPACITOR,CERAMIC 0.1MF/25V F
C1052	1-162-910-11	s	CAPACITOR,CERAMIC 5PF/50V 1608
C1053	1-162-910-11	s	CAPACITOR,CERAMIC 5PF/50V 1608
C1054	1-164-156-11	s	CAPACITOR,CERAMIC 0.1MF/25V F
C1055	1-164-156-11	s	CAPACITOR,CERAMIC 0.1MF/25V F
C1056	1-164-156-11	s	CAPACITOR,CERAMIC 0.1MF/25V F
C1057	1-164-156-11	s	CAPACITOR,CERAMIC 0.1MF/25V F
C1060	1-164-156-11	s	CAPACITOR,CERAMIC 0.1MF/25V F
C1061	1-164-156-11	s	CAPACITOR,CERAMIC 0.1MF/25V F
C1062	1-164-156-11	s	CAPACITOR,CERAMIC 0.1MF/25V F
C1063	1-164-156-11	s	CAPACITOR,CERAMIC 0.1MF/25V F
C1064	1-126-206-11	s	CAPACITOR, ELECT 100MF/6.3V
C1065	1-126-206-11	s	CAPACITOR, ELECT 100MF/6.3V
C1066	1-107-826-11	s	CAPACITOR,CHIP CERAMIC 0.1MF
C1067	1-107-826-11	s	CAPACITOR,CHIP CERAMIC 0.1MF
C1068	1-107-826-11	s	CAPACITOR,CHIP CERAMIC 0.1MF
C1069	1-162-923-11	s	CAPACITOR,CERAMIC 47PF/50V CH
C1070	1-135-341-11	s	CAPACITOR,SOLID ELECT 330MF
C1071	1-164-156-11	s	CAPACITOR,CERAMIC 0.1MF/25V F
C1100	1-164-156-11	s	CAPACITOR,CERAMIC 0.1MF/25V F
C1102	1-126-206-11	s	CAPACITOR, ELECT 100MF/6.3V
C1103	1-126-206-11	s	CAPACITOR, ELECT 100MF/6.3V
C1104	1-164-156-11	s	CAPACITOR,CERAMIC 0.1MF/25V F
C1105	1-164-156-11	s	CAPACITOR,CERAMIC 0.1MF/25V F
C1107	1-164-156-11	s	CAPACITOR,CERAMIC 0.1MF/25V F
C1108	1-162-921-11	s	CAPACITOR,CERAMIC 33PF/50V CH
C1109	1-164-230-11	s	CAPACITOR,CERAMIC 220PF/50V
C1110	1-164-156-11	s	CAPACITOR,CERAMIC 0.1MF/25V F
C1111	1-164-156-11	s	CAPACITOR,CERAMIC 0.1MF/25V F
C1112	1-164-315-11	s	CAPACITOR,CERAMIC 470PF/50V CH
C1113	1-164-230-11	s	CAPACITOR,CERAMIC 220PF/50V
C1114	1-164-315-11	s	CAPACITOR,CERAMIC 470PF/50V CH
C1115	1-164-230-11	s	CAPACITOR,CERAMIC 220PF/50V
C1116	1-164-156-11	s	CAPACITOR,CERAMIC 0.1MF/25V F

(VPR-64 BOARD [SUFFIX 15] for MSW RECORDER)

Ref. No. or Q'ty	Part No.	SP	Description
C1118	1-162-970-11	s	CAPACITOR CERAMIC 0.01MF/25V B
C1120	1-164-156-11	s	CAPACITOR,CERAMIC 0.1MF/25V F
C1122	1-127-954-11	s	CAPACITOR,CHIP FILM 0.047MF
C1123	1-164-156-11	s	CAPACITOR,CERAMIC 0.1MF/25V F
C1124	1-164-156-11	s	CAPACITOR,CERAMIC 0.1MF/25V F
C1125	1-164-156-11	s	CAPACITOR,CERAMIC 0.1MF/25V F
C1126	1-164-156-11	s	CAPACITOR,CERAMIC 0.1MF/25V F
C1127	1-164-156-11	s	CAPACITOR,CERAMIC 0.1MF/25V F
C1128	1-162-911-11	s	CAPACITOR,CERAMIC 6PF/50V 1608
C1129	1-162-907-11	s	CAPACITOR,CERAMIC 2PF/50V(CK)
C1130	1-162-921-11	s	CAPACITOR,CERAMIC 33PF/50V CH
C1131	1-162-921-11	s	CAPACITOR,CERAMIC 33PF/50V CH
C1134	1-164-156-11	s	CAPACITOR,CERAMIC 0.1MF/25V F
C1135	1-164-156-11	s	CAPACITOR,CERAMIC 0.1MF/25V F
C1136	1-164-156-11	s	CAPACITOR,CERAMIC 0.1MF/25V F
C1137	1-164-156-11	s	CAPACITOR,CERAMIC 0.1MF/25V F
C1141	1-164-156-11	s	CAPACITOR,CERAMIC 0.1MF/25V F
C1142	1-164-156-11	s	CAPACITOR,CERAMIC 0.1MF/25V F
C1143	1-164-156-11	s	CAPACITOR,CERAMIC 0.1MF/25V F
C1144	1-164-156-11	s	CAPACITOR,CERAMIC 0.1MF/25V F
C1145	1-164-156-11	s	CAPACITOR,CERAMIC 0.1MF/25V F
C1146	1-164-156-11	s	CAPACITOR,CERAMIC 0.1MF/25V F
C1147	1-164-156-11	s	CAPACITOR,CERAMIC 0.1MF/25V F
C1148	1-164-156-11	s	CAPACITOR,CERAMIC 0.1MF/25V F
C1149	1-164-156-11	s	CAPACITOR,CERAMIC 0.1MF/25V F
C1150	1-164-156-11	s	CAPACITOR,CERAMIC 0.1MF/25V F
C1151	1-164-156-11	s	CAPACITOR,CERAMIC 0.1MF/25V F
C1152	1-164-156-11	s	CAPACITOR,CERAMIC 0.1MF/25V F
C1153	1-107-826-11	s	CAPACITOR,CHIP CERAMIC 0.1MF
C1154	1-107-826-11	s	CAPACITOR,CHIP CERAMIC 0.1MF
C1155	1-164-156-11	s	CAPACITOR,CERAMIC 0.1MF/25V F
C1200	1-164-156-11	s	CAPACITOR,CERAMIC 0.1MF/25V F
C1203	1-162-925-11	s	CAPACITOR,CERAMIC 68PF/50V CH
C1204	1-164-230-11	s	CAPACITOR,CERAMIC 220PF/50V
C1205	1-162-925-11	s	CAPACITOR,CERAMIC 68PF/50V CH
C1206	1-164-156-11	s	CAPACITOR,CERAMIC 0.1MF/25V F
C1208	1-164-156-11	s	CAPACITOR,CERAMIC 0.1MF/25V F
C1209	1-164-156-11	s	CAPACITOR,CERAMIC 0.1MF/25V F
C1210	1-164-156-11	s	CAPACITOR,CERAMIC 0.1MF/25V F
C1211	1-164-156-11	s	CAPACITOR,CERAMIC 0.1MF/25V F
C1213	1-164-156-11	s	CAPACITOR,CERAMIC 0.1MF/25V F
C1214	1-164-156-11	s	CAPACITOR,CERAMIC 0.1MF/25V F
C1215	1-162-970-11	s	CAPACITOR CERAMIC 0.01MF/25V B
C1216	1-164-156-11	s	CAPACITOR,CERAMIC 0.1MF/25V F
C1217	1-164-156-11	s	CAPACITOR,CERAMIC 0.1MF/25V F
C1218	1-162-919-11	s	CAPACITOR,CERAMIC 22PF/50V CH
C1220	1-164-156-11	s	CAPACITOR,CERAMIC 0.1MF/25V F
C1221	1-164-156-11	s	CAPACITOR,CERAMIC 0.1MF/25V F
C1222	1-164-156-11	s	CAPACITOR,CERAMIC 0.1MF/25V F
C1223	1-162-925-11	s	CAPACITOR,CERAMIC 68PF/50V CH
C1224	1-107-686-11	s	CAPACITOR,TANTALUM 4.7MF/16V
C1225	1-164-230-11	s	CAPACITOR,CERAMIC 220PF/50V
C1227	1-162-925-11	s	CAPACITOR,CERAMIC 68PF/50V CH
C1228	1-162-925-11	s	CAPACITOR,CERAMIC 68PF/50V CH
C1229	1-164-156-11	s	CAPACITOR,CERAMIC 0.1MF/25V F
C1230	1-107-686-11	s	CAPACITOR,TANTALUM 4.7MF/16V
C1231	1-164-156-11	s	CAPACITOR,CERAMIC 0.1MF/25V F
C1232	1-164-156-11	s	CAPACITOR,CERAMIC 0.1MF/25V F
C1233	1-164-156-11	s	CAPACITOR,CERAMIC 0.1MF/25V F

(VPR-64 BOARD [SUFFIX 15] for MSW RECORDER)

Ref. No. or Q'ty	Part No.	SP	Description
C1234	1-164-156-11	s	CAPACITOR,CERAMIC 0.1MF/25V F
C1235	1-164-156-11	s	CAPACITOR,CERAMIC 0.1MF/25V F
C1236	1-164-156-11	s	CAPACITOR,CERAMIC 0.1MF/25V F
C1237	1-164-156-11	s	CAPACITOR,CERAMIC 0.1MF/25V F
C1238	1-115-412-11	s	CAPACITOR,CERAMIC 680PF/25V CH
C1239	1-164-156-11	s	CAPACITOR,CERAMIC 0.1MF/25V F
C1241	1-164-156-11	s	CAPACITOR,CERAMIC 0.1MF/25V F
C1242	1-162-927-11	s	CAPACITOR,CERAMIC 100PF/50V CH
C1245	1-164-156-11	s	CAPACITOR,CERAMIC 0.1MF/25V F
C1246	1-162-927-11	s	CAPACITOR,CERAMIC 100PF/50V CH
C1249	1-164-156-11	s	CAPACITOR,CERAMIC 0.1MF/25V F
C1250	1-164-156-11	s	CAPACITOR,CERAMIC 0.1MF/25V F
C1251	1-164-156-11	s	CAPACITOR,CERAMIC 0.1MF/25V F
C1252	1-111-253-11	s	CAPACITOR TANTALUM 100MF/6.3V
C1253	1-111-253-11	s	CAPACITOR TANTALUM 100MF/6.3V
C1254	1-111-253-11	s	CAPACITOR TANTALUM 100MF/6.3V
C1255	1-111-253-11	s	CAPACITOR TANTALUM 100MF/6.3V
C1256	1-119-751-11	s	CAPACITOR,TANTALUM 22MF/16V
C1258	1-164-156-11	s	CAPACITOR,CERAMIC 0.1MF/25V F
C1259	1-164-156-11	s	CAPACITOR,CERAMIC 0.1MF/25V F
C1261	1-164-156-11	s	CAPACITOR,CERAMIC 0.1MF/25V F
C1265	1-164-156-11	s	CAPACITOR,CERAMIC 0.1MF/25V F
C1266	1-164-156-11	s	CAPACITOR,CERAMIC 0.1MF/25V F
C1267	1-164-156-11	s	CAPACITOR,CERAMIC 0.1MF/25V F
C1272	1-164-156-11	s	CAPACITOR,CERAMIC 0.1MF/25V F
C1273	1-164-156-11	s	CAPACITOR,CERAMIC 0.1MF/25V F
C1274	1-164-156-11	s	CAPACITOR,CERAMIC 0.1MF/25V F
C1275	1-164-156-11	s	CAPACITOR,CERAMIC 0.1MF/25V F
C1276	1-164-156-11	s	CAPACITOR,CERAMIC 0.1MF/25V F
C1277	1-164-156-11	s	CAPACITOR,CERAMIC 0.1MF/25V F
C1278	1-164-156-11	s	CAPACITOR,CERAMIC 0.1MF/25V F
C1279	1-164-156-11	s	CAPACITOR,CERAMIC 0.1MF/25V F
C1280	1-164-156-11	s	CAPACITOR,CERAMIC 0.1MF/25V F
C1281	1-164-156-11	s	CAPACITOR,CERAMIC 0.1MF/25V F
C1282	1-164-156-11	s	CAPACITOR,CERAMIC 0.1MF/25V F
C1283	1-164-156-11	s	CAPACITOR,CERAMIC 0.1MF/25V F
C1284	1-164-156-11	s	CAPACITOR,CERAMIC 0.1MF/25V F
C1285	1-164-156-11	s	CAPACITOR,CERAMIC 0.1MF/25V F
C1286	1-164-156-11	s	CAPACITOR,CERAMIC 0.1MF/25V F
C1287	1-164-156-11	s	CAPACITOR,CERAMIC 0.1MF/25V F
C1288	1-164-156-11	s	CAPACITOR,CERAMIC 0.1MF/25V F
C1289	1-164-156-11	s	CAPACITOR,CERAMIC 0.1MF/25V F
C1290	1-164-156-11	s	CAPACITOR,CERAMIC 0.1MF/25V F
C1291	1-164-156-11	s	CAPACITOR,CERAMIC 0.1MF/25V F
C1292	1-164-156-11	s	CAPACITOR,CERAMIC 0.1MF/25V F
C1293	1-164-156-11	s	CAPACITOR,CERAMIC 0.1MF/25V F
C1294	1-164-156-11	s	CAPACITOR,CERAMIC 0.1MF/25V F
C1295	1-164-156-11	s	CAPACITOR,CERAMIC 0.1MF/25V F
C1296	1-164-156-11	s	CAPACITOR,CERAMIC 0.1MF/25V F
C1297	1-164-156-11	s	CAPACITOR,CERAMIC 0.1MF/25V F
C1298	1-164-156-11	s	CAPACITOR,CERAMIC 0.1MF/25V F
C1299	1-164-156-11	s	CAPACITOR,CERAMIC 0.1MF/25V F
C1300	1-164-156-11	s	CAPACITOR,CERAMIC 0.1MF/25V F
C1301	1-164-156-11	s	CAPACITOR,CERAMIC 0.1MF/25V F
C1302	1-164-156-11	s	CAPACITOR,CERAMIC 0.1MF/25V F
C1303	1-164-227-11	s	CAPACITOR,CERAMIC 0.022MF/25V
C1304	1-164-227-11	s	CAPACITOR,CERAMIC 0.022MF/25V
C1305	1-162-927-11	s	CAPACITOR,CERAMIC 100PF/50V CH
C1306	1-164-156-11	s	CAPACITOR,CERAMIC 0.1MF/25V F

(VPR-64 BOARD [SUFFIX 15] for MSW RECORDER)

Ref. No. or Q'ty	Part No.	SP	Description
C1307	1-164-156-11	s	CAPACITOR,CERAMIC 0.1MF/25V F
C1308	1-164-156-11	s	CAPACITOR,CERAMIC 0.1MF/25V F
C1309	1-162-927-11	s	CAPACITOR,CERAMIC 100PF/50V CH
C1310	1-162-927-11	s	CAPACITOR,CERAMIC 100PF/50V CH
C1311	1-164-380-11	s	CAPACITOR,CERAMIC 51PF CH (M-)
C1312	1-162-922-11	s	CAPACITOR,CERAMIC 39PF/50V CH
C1313	1-117-887-11	s	CAPACITOR,TANTALUM 220MF/6.3V
C1314	1-126-206-11	s	CAPACITOR, ELECT 100MF/6.3V
C1315	1-162-968-11	s	CAPACITOR,CERAMIC 4700PF/50V B
C1316	1-164-156-11	s	CAPACITOR,CERAMIC 0.1MF/25V F
C1319	1-164-156-11	s	CAPACITOR,CERAMIC 0.1MF/25V F
C1320	1-164-156-11	s	CAPACITOR,CERAMIC 0.1MF/25V F
C1321	1-164-156-11	s	CAPACITOR,CERAMIC 0.1MF/25V F
C1322	1-164-156-11	s	CAPACITOR,CERAMIC 0.1MF/25V F
C1323	1-164-156-11	s	CAPACITOR,CERAMIC 0.1MF/25V F
C1324	1-164-156-11	s	CAPACITOR,CERAMIC 0.1MF/25V F
C1325	1-164-156-11	s	CAPACITOR,CERAMIC 0.1MF/25V F
C1400	1-164-156-11	s	CAPACITOR,CERAMIC 0.1MF/25V F
C1401	1-164-156-11	s	CAPACITOR,CERAMIC 0.1MF/25V F
C1402	1-164-156-11	s	CAPACITOR,CERAMIC 0.1MF/25V F
C1403	1-164-156-11	s	CAPACITOR,CERAMIC 0.1MF/25V F
C1404	1-164-156-11	s	CAPACITOR,CERAMIC 0.1MF/25V F
C1405	1-164-156-11	s	CAPACITOR,CERAMIC 0.1MF/25V F
C1406	1-164-156-11	s	CAPACITOR,CERAMIC 0.1MF/25V F
C1407	1-164-156-11	s	CAPACITOR,CERAMIC 0.1MF/25V F
C1408	1-164-156-11	s	CAPACITOR,CERAMIC 0.1MF/25V F
C1410	1-164-156-11	s	CAPACITOR,CERAMIC 0.1MF/25V F
C1411	1-164-156-11	s	CAPACITOR,CERAMIC 0.1MF/25V F
C1412	1-164-156-11	s	CAPACITOR,CERAMIC 0.1MF/25V F
C1413	1-162-919-11	s	CAPACITOR,CERAMIC 22PF/50V CH
C1416	1-162-919-11	s	CAPACITOR,CERAMIC 22PF/50V CH
C1417	1-162-919-11	s	CAPACITOR,CERAMIC 22PF/50V CH
C1418	1-162-970-11	s	CAPACITOR CERAMIC 0.01MF/25V B
C1420	1-162-970-11	s	CAPACITOR CERAMIC 0.01MF/25V B
C1421	1-162-970-11	s	CAPACITOR CERAMIC 0.01MF/25V B
C1422	1-162-970-11	s	CAPACITOR CERAMIC 0.01MF/25V B
C1423	1-164-156-11	s	CAPACITOR,CERAMIC 0.1MF/25V F
C1424	1-162-919-11	s	CAPACITOR,CERAMIC 22PF/50V CH
C1426	1-162-919-11	s	CAPACITOR,CERAMIC 22PF/50V CH
C1427	1-162-919-11	s	CAPACITOR,CERAMIC 22PF/50V CH
C1428	1-162-919-11	s	CAPACITOR,CERAMIC 22PF/50V CH
C1429	1-162-919-11	s	CAPACITOR,CERAMIC 22PF/50V CH
C1431	1-162-919-11	s	CAPACITOR,CERAMIC 22PF/50V CH
C1432	1-162-919-11	s	CAPACITOR,CERAMIC 22PF/50V CH
C1433	1-162-919-11	s	CAPACITOR,CERAMIC 22PF/50V CH
C1434	1-164-156-11	s	CAPACITOR,CERAMIC 0.1MF/25V F
C1435	1-164-156-11	s	CAPACITOR,CERAMIC 0.1MF/25V F
C1436	1-164-156-11	s	CAPACITOR,CERAMIC 0.1MF/25V F
C1437	1-164-156-11	s	CAPACITOR,CERAMIC 0.1MF/25V F
C1438	1-162-919-11	s	CAPACITOR,CERAMIC 22PF/50V CH
C1439	1-162-919-11	s	CAPACITOR,CERAMIC 22PF/50V CH
C1440	1-162-919-11	s	CAPACITOR,CERAMIC 22PF/50V CH
C1441	1-162-970-11	s	CAPACITOR CERAMIC 0.01MF/25V B
C1442	1-164-156-11	s	CAPACITOR,CERAMIC 0.1MF/25V F
C1443	1-164-156-11	s	CAPACITOR,CERAMIC 0.1MF/25V F
C1444	1-164-156-11	s	CAPACITOR,CERAMIC 0.1MF/25V F
C1445	1-164-156-11	s	CAPACITOR,CERAMIC 0.1MF/25V F
C1446	1-164-156-11	s	CAPACITOR,CERAMIC 0.1MF/25V F
C1447	1-164-156-11	s	CAPACITOR,CERAMIC 0.1MF/25V F

(VPR-64 BOARD [SUFFIX 15] for MSW RECORDER)

Ref. No. or Q'ty	Part No.	SP	Description
C1448	1-164-156-11	s	CAPACITOR,CERAMIC 0.1MF/25V F
C1449	1-164-156-11	s	CAPACITOR,CERAMIC 0.1MF/25V F
C1450	1-104-851-11	s	CAPACITOR,TANTALUM 10MF/10V
C1451	1-164-156-11	s	CAPACITOR,CERAMIC 0.1MF/25V F
C1452	1-164-156-11	s	CAPACITOR,CERAMIC 0.1MF/25V F
C1505	1-117-681-11	s	CAPACITOR, ELECT 100MF/16V
C1507	1-164-156-11	s	CAPACITOR,CERAMIC 0.1MF/25V F
C1508	1-126-206-11	s	CAPACITOR, ELECT 100MF/6.3V
C1509	1-164-156-11	s	CAPACITOR,CERAMIC 0.1MF/25V F
C1510	1-117-681-11	s	CAPACITOR, ELECT 100MF/16V
C1511	1-164-156-11	s	CAPACITOR,CERAMIC 0.1MF/25V F
C1534	1-164-156-11	s	CAPACITOR,CERAMIC 0.1MF/25V F
C1535	1-164-156-11	s	CAPACITOR,CERAMIC 0.1MF/25V F
C1536	1-164-156-11	s	CAPACITOR,CERAMIC 0.1MF/25V F
C1538	1-164-156-11	s	CAPACITOR,CERAMIC 0.1MF/25V F
C1539	1-164-156-11	s	CAPACITOR,CERAMIC 0.1MF/25V F
C1540	1-164-230-11	s	CAPACITOR,CERAMIC 220PF/50V
C1541	1-164-156-11	s	CAPACITOR,CERAMIC 0.1MF/25V F
C1542	1-164-156-11	s	CAPACITOR,CERAMIC 0.1MF/25V F
C1543	1-164-156-11	s	CAPACITOR,CERAMIC 0.1MF/25V F
C1544	1-164-156-11	s	CAPACITOR,CERAMIC 0.1MF/25V F
C1545	1-164-156-11	s	CAPACITOR,CERAMIC 0.1MF/25V F
C1548	1-119-751-11	s	CAPACITOR,TANTALUM 22MF/16V
C1549	1-164-156-11	s	CAPACITOR,CERAMIC 0.1MF/25V F
C1550	1-164-156-11	s	CAPACITOR,CERAMIC 0.1MF/25V F
C1552	1-164-156-11	s	CAPACITOR,CERAMIC 0.1MF/25V F
C1555	1-164-156-11	s	CAPACITOR,CERAMIC 0.1MF/25V F
C1556	1-164-156-11	s	CAPACITOR,CERAMIC 0.1MF/25V F
C1559	1-164-156-11	s	CAPACITOR,CERAMIC 0.1MF/25V F
C1560	1-164-156-11	s	CAPACITOR,CERAMIC 0.1MF/25V F
C1561	1-164-156-11	s	CAPACITOR,CERAMIC 0.1MF/25V F
C1563	1-164-156-11	s	CAPACITOR,CERAMIC 0.1MF/25V F
C1565	1-164-156-11	s	CAPACITOR,CERAMIC 0.1MF/25V F
C1568	1-164-156-11	s	CAPACITOR,CERAMIC 0.1MF/25V F
C1569	1-164-156-11	s	CAPACITOR,CERAMIC 0.1MF/25V F
C1570	1-115-416-11	s	CAPACITOR,CERAMIC 1000PF/25V
C1571	1-115-416-11	s	CAPACITOR,CERAMIC 1000PF/25V
C1572	1-164-156-11	s	CAPACITOR,CERAMIC 0.1MF/25V F
C1573	1-164-156-11	s	CAPACITOR,CERAMIC 0.1MF/25V F
C1575	1-126-206-11	s	CAPACITOR, ELECT 100MF/6.3V
C1577	1-164-156-11	s	CAPACITOR,CERAMIC 0.1MF/25V F
C1578	1-164-156-11	s	CAPACITOR,CERAMIC 0.1MF/25V F
C1579	1-162-919-11	s	CAPACITOR,CERAMIC 22PF/50V CH
C1590	1-135-870-91	s	CAPACITOR, TANTALUM 2.2/16V
C1591	1-135-870-91	s	CAPACITOR, TANTALUM 2.2/16V
C2000	1-161-772-11	s	CAPACITOR,CERAMIC 0.1MF/25V
CN700	1-580-789-21	o	PIN,CONNECTOR (SMD) 6P
D100	8-719-820-41	s	DIODE 1SS302
D303	8-719-820-41	s	DIODE 1SS302
D304	8-719-820-41	s	DIODE 1SS302
D500	8-719-157-11	s	DIODE RD3.3M-B
D501	8-719-157-11	s	DIODE RD3.3M-B
D502	8-719-157-11	s	DIODE RD3.3M-B
D900	8-719-820-41	s	DIODE 1SS302
D901	8-719-820-41	s	DIODE 1SS302
D903	8-719-820-41	s	DIODE 1SS302
D1100	8-719-023-69	s	DIODE SB007T03Q

(VPR-64 BOARD [SUFFIX 15] for MSW RECORDER)

Ref. No. or Q'ty	Part No.	SP	Description
D1101	8-719-820-41	s	DIODE 1SS302
D1102	8-719-820-41	s	DIODE 1SS302
D1200	8-719-820-41	s	DIODE 1SS302
D1201	8-719-820-41	s	DIODE 1SS302
D1203	8-719-023-69	s	DIODE SB007T03Q
D1204	8-719-820-41	s	DIODE 1SS302
D1401	8-719-820-41	s	DIODE 1SS302
F1500	⚠ 1-533-627-21	s	FUSE CHIP 5A/125V (6125)
F1501	⚠ 1-533-627-21	s	FUSE CHIP 5A/125V (6125)
F1502	⚠ 1-533-627-21	s	FUSE CHIP 5A/125V (6125)
FB1	1-469-094-11	s	FERRITE, EMI (SMD)
FB300	1-469-094-11	s	FERRITE, EMI (SMD)
FB301	1-469-094-11	s	FERRITE, EMI (SMD)
FB1201	1-469-094-11	s	FERRITE, EMI (SMD)
FB1204	1-469-094-11	s	FERRITE, EMI (SMD)
FB1207	1-469-094-11	s	FERRITE, EMI (SMD)
FL100	1-234-006-11	s	FILTER, LOW PASS
FL500	1-234-006-11	s	FILTER, LOW PASS
FL501	1-239-722-11	s	FILTER, LOW PASS (3MHZ)
FL502	1-239-722-11	s	FILTER, LOW PASS (3MHZ)
FL700	1-233-674-21	s	FILTER, EMI
FL701	1-233-674-21	s	FILTER, EMI
FL702	1-233-674-21	s	FILTER, EMI
FL703	1-233-674-21	s	FILTER, EMI
FL800	1-233-674-21	s	FILTER, EMI
FL801	1-233-674-21	s	FILTER, EMI
FL802	1-233-674-21	s	FILTER, EMI
FL900	1-239-721-11	s	FILTER, LOW PASS (6MHZ)
FL901	1-239-721-11	s	FILTER, LOW PASS (6MHZ)
FL902	1-239-721-11	s	FILTER, LOW PASS (6MHZ)
FL903	1-239-721-11	s	FILTER, LOW PASS (6MHZ)
FL1400	1-233-674-21	s	FILTER, EMI
FL1401	1-233-674-21	s	FILTER, EMI
FL1402	1-233-674-21	s	FILTER, EMI
FL1403	1-233-674-21	s	FILTER, EMI
FL1404	1-233-674-21	s	FILTER, EMI
FL1405	1-233-674-21	s	FILTER, EMI
FL1406	1-239-898-22	s	FILTER, EMI (SMD)
FL1407	1-239-898-22	s	FILTER, EMI (SMD)
FL1408	1-239-898-22	s	FILTER, EMI (SMD)
FL1409	1-239-898-22	s	FILTER, EMI (SMD)
FL1410	1-239-898-22	s	FILTER, EMI (SMD)
FL1411	1-239-898-22	s	FILTER, EMI (SMD)
FL1412	1-239-898-22	s	FILTER, EMI (SMD)
FL1413	1-239-898-22	s	FILTER, EMI (SMD)
FL1414	1-233-674-21	s	FILTER, EMI
FL1415	1-239-898-22	s	FILTER, EMI (SMD)
IC100	8-759-533-85	s	IC L88M05T-FA-TL
IC103	8-759-339-66	s	IC LT1122CS8-E1
IC104	8-759-182-47	s	IC CLC520AJE (L)
IC107	8-759-987-27	s	IC LM1881M
IC109	8-759-196-97	s	IC TC7SH32FU (TE85R)
IC110	8-752-068-24	s	IC CXA1450M-TH
IC112	8-759-702-08	s	IC NJM360M
IC113	8-759-183-53	s	IC TL431CPK-E2
IC114	8-759-183-53	s	IC TL431CPK-E2
IC115	8-759-669-74	s	IC TL084CPWR-12

(VPR-64 BOARD [SUFFIX 15] for MSW RECORDER)

Ref. No. or Q'ty	Part No.	SP	Description
IC116	8-759-669-73	s	IC TL082CPWR
IC117	8-759-524-18	s	IC TC74VHC163FT(EL)
IC118	8-759-542-91	s	IC S-80840ANUP-ED4-T2
IC119	8-759-524-18	s	IC TC74VHC163FT(EL)
IC120	8-752-376-32	s	IC CXD2310AR
IC121	8-759-702-08	s	IC NJM360M
IC122	8-759-528-99	s	IC TC74VHC221AFT(EL)
IC126	8-759-669-74	s	IC TL084CPWR-12
IC129	8-759-523-97	s	IC TC74VHC123AFT(EL)
IC130	8-759-669-74	s	IC TL084CPWR-12
IC132	8-759-528-99	s	IC TC74VHC221AFT(EL)
IC134	6-700-915-01	s	IC SN74AHCT04PWR
IC139	8-759-082-61	s	IC TC4W53FU
IC140	8-759-082-61	s	IC TC4W53FU
IC141	8-759-082-61	s	IC TC4W53FU
IC142	8-759-082-61	s	IC TC4W53FU
IC143	8-759-196-97	s	IC TC7SH32FU (TE85R)
IC144	8-759-196-97	s	IC TC7SH32FU (TE85R)
IC145	8-759-669-73	s	IC TL082CPWR
IC146	8-759-523-95	s	IC TC74VHC74FT(EL)
IC147	8-759-528-99	s	IC TC74VHC221AFT(EL)
IC148	8-759-528-99	s	IC TC74VHC221AFT(EL)
IC149	8-759-523-97	s	IC TC74VHC123AFT(EL)
IC150	8-759-523-95	s	IC TC74VHC74FT(EL)
IC151	8-759-573-91	s	IC AD8055ART-REEL7
IC152	8-759-449-58	s	IC LM7131BCM5X
IC153	8-752-068-24	s	IC CXA1450M-TH
IC301	8-759-549-15	s	IC SN74LV245APWR
IC302	8-752-334-55	s	IC CXD1175AM
IC303	8-759-196-97	s	IC TC7SH32FU (TE85R)
IC304	8-759-589-47	s	IC LP2986AIMM-3.3
IC305	8-759-549-15	s	IC SN74LV245APWR
IC308	8-759-669-75	s	IC TLC2932IPWR
IC313	8-759-639-07	o	IC CXD9101R
IC316	6-700-915-01	s	IC SN74AHCT04PWR
IC317	6-701-541-01	s	IC TLC2272CPW (R)
IC319	8-759-392-77	s	IC SN74LVC245APW (E20)
IC320	8-759-669-74	s	IC TL084CPWR-12
IC321	8-759-564-49	s	IC TC7W53FU-TE12R
IC323	8-759-523-97	s	IC TC74VHC123AFT(EL)
IC324	8-759-523-95	s	IC TC74VHC74FT(EL)
IC325	8-759-196-97	s	IC TC7SH32FU (TE85R)
IC326	8-759-523-95	s	IC TC74VHC74FT(EL)
IC327	8-759-271-86	s	IC TC7SH04FU
IC502	8-759-987-27	s	IC LM1881M
IC503	8-759-528-99	s	IC TC74VHC221AFT(EL)
IC504	8-759-669-74	s	IC TL084CPWR-12
IC505	8-759-669-74	s	IC TL084CPWR-12
IC506	8-759-669-74	s	IC TL084CPWR-12
IC507	8-759-669-74	s	IC TL084CPWR-12
IC509	8-759-196-96	s	IC TC7SH08FU (TE85R)
IC510	8-759-196-96	s	IC TC7SH08FU (TE85R)
IC511	8-759-669-74	s	IC TL084CPWR-12
IC513	8-759-523-78	s	IC TC74VHC00FT(EL)
IC514	8-759-082-60	s	IC TC7S66FU
IC515	8-759-669-73	s	IC TL082CPWR
IC516	8-759-082-60	s	IC TC7S66FU
IC517	8-759-082-60	s	IC TC7S66FU
IC518	8-759-702-08	s	IC NJM360M

(VPR-64 BOARD [SUFFIX 15] for MSW RECORDER)

Ref. No. or Q'ty	Part No.	SP	Description
IC519	8-759-702-08	s	IC NJM360M
IC520	8-759-183-53	s	IC TL431CPK-E2
IC521	8-759-549-15	s	IC SN74LV245APWR
IC522	8-759-183-53	s	IC TL431CPK-E2
IC523	8-752-376-32	s	IC CXD2310AR
IC524	8-759-524-52	s	IC TC74VHC574FT(EL)
IC525	8-759-523-95	s	IC TC74VHC74FT(EL)
IC526	8-759-533-85	s	IC L88M05T-FA-TL
IC702	8-759-549-01	s	IC SN74LV125APWR
IC703	8-759-524-52	s	IC TC74VHC574FT(EL)
IC704	8-759-524-52	s	IC TC74VHC574FT(EL)
IC705	8-759-524-52	s	IC TC74VHC574FT(EL)
IC707	8-759-639-85	s	IC SN65LVDS31DR
IC708	8-759-392-77	s	IC SN74LVC245APW (E20)
IC709	8-759-392-77	s	IC SN74LVC245APW (E20)
IC710	8-759-392-77	s	IC SN74LVC245APW (E20)
IC711	8-759-392-77	s	IC SN74LVC245APW (E20)
IC712	8-759-524-10	s	IC TC74VHC157FT (EL)
IC713	6-701-068-01	s	IC SI-3018LSA-TL
IC715	6-802-600-02	s	IC XC18V02-VPR64-V209
IC716	8-759-524-27	s	IC TC74VHC244FT(EL)
IC717	8-759-271-86	s	IC TC7SH04FU
IC801	8-759-524-52	s	IC TC74VHC574FT(EL)
IC802	8-759-524-52	s	IC TC74VHC574FT(EL)
IC803	8-759-524-52	s	IC TC74VHC574FT(EL)
IC804	8-759-524-52	s	IC TC74VHC574FT(EL)
IC805	8-759-524-52	s	IC TC74VHC574FT(EL)
IC806	6-702-238-11	s	IC HY57V643220CT-7TR
IC807	6-702-238-11	s	IC HY57V643220CT-7TR
IC808	6-702-238-11	s	IC HY57V643220CT-7TR
IC809	8-759-392-77	s	IC SN74LVC245APW (E20)
IC810	8-759-392-77	s	IC SN74LVC245APW (E20)
IC811	8-759-392-77	s	IC SN74LVC245APW (E20)
IC813	6-702-238-11	s	IC HY57V643220CT-7TR
IC901	8-759-589-47	s	IC LP2986AIMM-3.3
IC902	8-759-654-93	s	IC CXD9100AR
IC903	8-759-542-87	s	IC S-80827ANUP-EDQ-T2
IC906	6-700-915-01	s	IC SN74AHCT04PWR
IC910	8-759-669-75	s	IC TLC2932IPWR
IC912	8-759-196-93	s	IC TC7SH00FU-TE85R
IC913	8-759-524-52	s	IC TC74VHC574FT(EL)
IC914	8-759-524-52	s	IC TC74VHC574FT(EL)
IC915	8-759-524-52	s	IC TC74VHC574FT(EL)
IC916	8-759-524-52	s	IC TC74VHC574FT(EL)
IC917	8-759-196-96	s	IC TC7SH08FU (TE85R)
IC918	8-759-082-60	s	IC TC7S66FU
IC919	8-759-669-73	s	IC TL082CPWR
IC920	8-752-357-63	s	IC CXD2308Q
IC922	8-759-573-91	s	IC AD8055ART-REEL7
IC923	8-759-573-91	s	IC AD8055ART-REEL7
IC924	8-759-573-91	s	IC AD8055ART-REEL7
IC925	8-759-573-91	s	IC AD8055ART-REEL7
IC926	6-701-524-01	s	IC SN74LS221DBR
IC927	8-759-564-49	s	IC TC7W53FU-TE12R
IC928	8-759-564-49	s	IC TC7W53FU-TE12R
IC929	8-759-564-49	s	IC TC7W53FU-TE12R
IC930	8-759-564-49	s	IC TC7W53FU-TE12R
IC931	8-759-669-73	s	IC TL082CPWR
IC932	8-759-669-73	s	IC TL082CPWR

(VPR-64 BOARD [SUFFIX 15] for MSW RECORDER)

Ref. No. or Q'ty	Part No.	SP	Description
IC933	8-759-669-73	s	IC TL082CPWR
IC934	8-759-669-73	s	IC TL082CPWR
IC935	8-759-573-91	s	IC AD8055ART-REEL7
IC936	8-752-068-24	s	IC CXA1450M-TH
IC937	8-759-573-91	s	IC AD8055ART-REEL7
IC938	8-759-573-91	s	IC AD8055ART-REEL7
IC939	8-759-573-91	s	IC AD8055ART-REEL7
IC940	8-759-573-91	s	IC AD8055ART-REEL7
IC941	8-759-573-91	s	IC AD8055ART-REEL7
IC943	8-759-196-93	s	IC TC7SH00FU-TE85R
IC944	8-759-549-01	s	IC SN74LV125APWR
IC945	8-759-564-49	s	IC TC7W53FU-TE12R
IC947	8-759-564-49	s	IC TC7W53FU-TE12R
IC949	8-759-157-17	s	IC PQ05SZ1U
IC950	8-759-539-89	s	IC LM2990SX-5.0
IC951	8-759-082-60	s	IC TC7S66FU
IC1100	8-759-533-85	s	IC L88M05T-FA-TL
IC1103	8-759-987-27	s	IC LM1881M
IC1104	8-759-392-77	s	IC SN74LVC245APW (E20)
IC1105	8-759-702-08	s	IC NJM360M
IC1107	8-759-702-08	s	IC NJM360M
IC1113	8-759-528-99	s	IC TC74VHC221AFT(EL)
IC1114	8-759-669-73	s	IC TL082CPWR
IC1117	8-759-523-81	s	IC TC74VHC08FT(EL)
IC1118	8-759-524-09	s	IC TC74VHC153FT (EL)
IC1119			
*b	6-700-352-01	s	IC SN74CBTLV3253PWR
*a	8-759-524-09	s	IC TC74VHC153FT (EL)
IC1120	8-759-833-99	s	IC MC74HC4052ADTR2
IC1121	8-759-392-77	s	IC SN74LVC245APW (E20)
IC1122	8-759-392-77	s	IC SN74LVC245APW (E20)
IC1123	8-759-549-15	s	IC SN74LV245APWR
IC1124	8-759-549-15	s	IC SN74LV245APWR
IC1125	8-759-549-15	s	IC SN74LV245APWR
IC1126	8-759-549-01	s	IC SN74LV125APWR
IC1127	8-759-549-15	s	IC SN74LV245APWR
IC1128	8-759-549-15	s	IC SN74LV245APWR
IC1129	8-759-271-86	s	IC TC7SH04FU
IC1130	8-759-639-86	s	IC SN65LVDS32DR
IC1131	8-759-271-86	s	IC TC7SH04FU
IC1132	8-759-271-86	s	IC TC7SH04FU
IC1134			
*b	6-700-268-01	s	IC SN74CBTLV3125PWR
*a	8-759-549-01	s	IC SN74LV125APWR
IC1135	8-759-271-86	s	IC TC7SH04FU
IC1136	8-759-082-60	s	IC TC7S66FU
IC1200	8-759-183-53	s	IC TL431CPK-E2
IC1201	8-759-669-75	s	IC TLC2932IPWR
IC1202	8-759-702-08	s	IC NJM360M
IC1204	8-759-702-08	s	IC NJM360M
IC1212	8-759-491-46	s	IC TC74VHCT04AFT (EL)
IC1214	8-759-669-74	s	IC TL084CPWR-12
IC1216	6-701-524-01	s	IC SN74LS221DBR
IC1220	6-701-524-01	s	IC SN74LS221DBR
IC1221	8-759-669-74	s	IC TL084CPWR-12
IC1230	8-759-669-75	s	IC TLC2932IPWR
IC1231	8-759-564-49	s	IC TC7W53FU-TE12R
IC1232	8-759-392-77	s	IC SN74LVC245APW (E20)
IC1234	8-759-392-77	s	IC SN74LVC245APW (E20)

(VPR-64 BOARD [SUFFIX 15] for MSW RECORDER)

Ref. No. or Q'ty	Part No.	SP	Description
IC1235	8-759-082-60	s	IC TC7S66FU
IC1236	8-759-082-60	s	IC TC7S66FU
IC1237	8-759-523-02	s	IC TC74HC4053AFT(EL)
IC1238	8-759-564-49	s	IC TC7W53FU-TE12R
IC1239	8-759-271-86	s	IC TC7SH04FU
IC1240	6-701-524-01	s	IC SN74LS221DBR
IC1241	8-759-196-96	s	IC TC7SH08FU (TE85R)
IC1243	6-700-915-01	s	IC SN74AHCT04PWR
IC1244	8-759-669-74	s	IC TL084CPWR-12
IC1245	8-759-491-46	s	IC TC74VHCT04AFT (EL)
IC1247	8-759-523-95	s	IC TC74VHC74FT(EL)
IC1248	8-759-523-96	s	IC TC74VHC86FT (EL)
IC1249	8-759-523-95	s	IC TC74VHC74FT(EL)
IC1250	6-701-524-01	s	IC SN74LS221DBR
IC1251	8-759-525-10	s	IC TC7SET08F(TE85L)
IC1252	8-759-271-86	s	IC TC7SH04FU
IC1253	8-759-524-10	s	IC TC74VHC157FT (EL)
IC1256	8-752-375-98	s	IC CXD2315Q
IC1406	8-759-392-77	s	IC SN74LVC245APW (E20)
IC1407	8-759-524-18	s	IC TC74VHC163FT(EL)
IC1408	8-759-549-15	s	IC SN74LV245APWR
IC1409	8-759-392-77	s	IC SN74LVC245APW (E20)
IC1413	8-759-523-95	s	IC TC74VHC74FT(EL)
IC1417	8-759-523-95	s	IC TC74VHC74FT(EL)
IC1418	8-759-392-77	s	IC SN74LVC245APW (E20)
IC1419	8-759-392-77	s	IC SN74LVC245APW (E20)
IC1420	8-759-392-77	s	IC SN74LVC245APW (E20)
IC1421	8-759-392-77	s	IC SN74LVC245APW (E20)
IC1422	8-759-392-77	s	IC SN74LVC245APW (E20)
IC1423	8-759-392-77	s	IC SN74LVC245APW (E20)
IC1426	8-759-523-78	s	IC TC74VHC00FT(EL)
IC1427	8-759-523-78	s	IC TC74VHC00FT(EL)
IC1428	8-759-523-78	s	IC TC74VHC00FT(EL)
IC1429	8-759-491-46	s	IC TC74VHCT04AFT (EL)
IC1430	8-759-523-81	s	IC TC74VHC08FT(EL)
IC1431	8-759-523-94	s	IC TC74VHC32FT(EL)
IC1432	8-759-549-15	s	IC SN74LV245APWR
IC1433	8-759-549-15	s	IC SN74LV245APWR
IC1434	8-759-523-95	s	IC TC74VHC74FT(EL)
IC1505	8-759-524-07	s	IC TC74VHC138FT(EL)
IC1509	8-752-392-03	s	IC CXD1095BR
IC1510	8-759-524-07	s	IC TC74VHC138FT(EL)
IC1511	8-759-549-15	s	IC SN74LV245APWR
IC1512	8-759-468-72	s	IC AK6420AM (E2)
IC1513	8-759-183-53	s	IC TL431CPK-E2
IC1514	8-759-539-53	s	IC MB90096PF-G-139-BND(ER)
IC1522	8-759-491-46	s	IC TC74VHCT04AFT (EL)
IC1525	8-759-491-47	s	IC TC74VHCT08FT (EL)
IC1526	8-759-490-42	s	IC TC74VHCT574AFT(EL)
IC1527	8-759-523-81	s	IC TC74VHC08FT(EL)
IC1528	8-759-196-96	s	IC TC7SH08FU (TE85R)
IC1529	8-759-271-86	s	IC TC7SH04FU
IC1530	8-759-491-46	s	IC TC74VHCT04AFT (EL)
IC1531	6-700-915-01	s	IC SN74AHCT04PWR
IC1532	8-759-549-15	s	IC SN74LV245APWR
IC1533	8-759-549-15	s	IC SN74LV245APWR
IC1534	8-759-549-15	s	IC SN74LV245APWR
IC1535	8-759-549-15	s	IC SN74LV245APWR
IC1536	8-759-578-68	s	IC SN74LVCC4245APWR

(VPR-64 BOARD [SUFFIX 15] for MSW RECORDER)

Ref. No. or Q'ty	Part No.	SP	Description
IC1537	8-759-578-68	s	IC SN74LVCC4245APWR
IC1538	8-759-523-94	s	IC TC74VHC32FT(EL)
IC1539	8-759-549-01	s	IC SN74LV125APWR
IC1540	8-759-536-93	s	IC M62371GP-600D
IC1541	8-759-523-81	s	IC TC74VHC08FT(EL)
IC1542	8-759-833-99	s	IC MC74HC4052ADTR2
IC1543	8-759-669-73	s	IC TL082CPWR
IC1544	8-759-523-94	s	IC TC74VHC32FT(EL)
IC1545	8-759-491-47	s	IC TC74VHCT08FT (EL)
IC1546	6-700-915-01	s	IC SN74AHCT04PWR
IC1547	6-700-915-01	s	IC SN74AHCT04PWR
IC1548	8-759-491-47	s	IC TC74VHCT08FT (EL)
L101	1-410-393-11	s	INDUCTOR,CHIP 100UH (3225)
L102	1-410-393-11	s	INDUCTOR,CHIP 100UH (3225)
L103	1-414-392-31	s	INDUCTOR (SMD) 1.0UH
L104	1-410-373-31	s	CHIP INDUCTOR 2.2UH (3225)
L105	1-410-369-11	s	INDUCTOR,CHIP 1UH (3225)
L106	1-410-738-41	s	INDUCTOR,CHIP 0.56UH
L107	1-410-738-41	s	INDUCTOR,CHIP 0.56UH
L500	1-410-386-11	s	CHIP INDUCTOR 27UH (3225)
L700	1-414-398-11	s	INDUCTOR (SMD) 10UH
L900	1-414-398-11	s	INDUCTOR (SMD) 10UH
L903	1-414-398-11	s	INDUCTOR (SMD) 10UH
L904	1-414-398-11	s	INDUCTOR (SMD) 10UH
L905	1-414-398-11	s	INDUCTOR (SMD) 10UH
L906	1-414-398-11	s	INDUCTOR (SMD) 10UH
L907	1-410-732-31	s	CHIP INDUCTOR 0.18UH (3225)
L908	1-410-732-31	s	CHIP INDUCTOR 0.18UH (3225)
L909	1-410-387-11	s	INDUCTOR,CHIP 33UH (3225)
L910	1-410-387-11	s	INDUCTOR,CHIP 33UH (3225)
L911	1-410-388-31	s	INDUCTOR,CHIP 39UH
L912	1-410-388-31	s	INDUCTOR,CHIP 39UH
L913	1-410-387-11	s	INDUCTOR,CHIP 33UH (3225)
L914	1-414-398-11	s	INDUCTOR (SMD) 10UH
L1100	1-410-393-11	s	INDUCTOR,CHIP 100UH (3225)
L1101	1-410-385-11	s	INDUCTOR,CHIP 22UH (3225)
L1102	1-410-388-31	s	INDUCTOR,CHIP 39UH
L1103	1-414-398-11	s	INDUCTOR (SMD) 10UH
L1104	1-414-398-11	s	INDUCTOR (SMD) 10UH
L1200	1-414-398-11	s	INDUCTOR (SMD) 10UH
L1201	1-414-398-11	s	INDUCTOR (SMD) 10UH
L1202	1-414-398-11	s	INDUCTOR (SMD) 10UH
L1203	1-414-398-11	s	INDUCTOR (SMD) 10UH
L1204	1-414-398-11	s	INDUCTOR (SMD) 10UH
L1205	1-410-393-11	s	INDUCTOR,CHIP 100UH (3225)
L1206	1-410-393-11	s	INDUCTOR,CHIP 100UH (3225)
OSC1	1-781-806-21	s	LITHIUM TANTALATE OSCILLATOR
Q100	8-729-117-32	s	TRANSISTOR 2SC4177
Q101	8-729-013-37	s	TRANSISTOR 2SC4213-AB-TE85L
Q102	8-729-140-63	s	TRANSISTOR 2SA1611-M5M6
Q103	8-729-140-63	s	TRANSISTOR 2SA1611-M5M6
Q104	8-729-143-07	s	TRANSISTOR 2SA1610-Y33
Q105	8-729-143-07	s	TRANSISTOR 2SA1610-Y33
Q106	8-729-117-32	s	TRANSISTOR 2SC4177
Q107	8-729-117-32	s	TRANSISTOR 2SC4177
Q108	8-729-140-63	s	TRANSISTOR 2SA1611-M5M6
Q109	8-729-118-56	s	TRANSISTOR 2SK852-X2

(VPR-64 BOARD [SUFFIX 15] for MSW RECORDER)

Ref. No. or Q'ty	Part No.	SP	Description
Q110	8-729-140-63	s	TRANSISTOR 2SA1611-M5M6
Q111	8-729-140-63	s	TRANSISTOR 2SA1611-M5M6
Q112	8-729-029-14	s	TRANSISTOR DTC144EUA-T106
Q113	8-729-117-32	s	TRANSISTOR 2SC4177
Q114	8-729-117-32	s	TRANSISTOR 2SC4177
Q115	8-729-029-14	s	TRANSISTOR DTC144EUA-T106
Q116	8-729-013-37	s	TRANSISTOR 2SC4213-AB-TE85L
Q117	8-729-026-58	s	TRANSISTOR FMY3A-T148
Q300	8-729-026-58	s	TRANSISTOR FMY3A-T148
Q301	8-729-140-63	s	TRANSISTOR 2SA1611-M5M6
Q302	8-729-140-63	s	TRANSISTOR 2SA1611-M5M6
Q303	8-729-029-14	s	TRANSISTOR DTC144EUA-T106
Q304	8-729-029-14	s	TRANSISTOR DTC144EUA-T106
Q500	8-729-140-63	s	TRANSISTOR 2SA1611-M5M6
Q501	8-729-028-91	s	TRANSISTOR DTA144EUA-T106
Q502	8-729-140-63	s	TRANSISTOR 2SA1611-M5M6
Q503	8-729-013-37	s	TRANSISTOR 2SC4213-AB-TE85L
Q504	8-729-013-37	s	TRANSISTOR 2SC4213-AB-TE85L
Q505	8-729-140-63	s	TRANSISTOR 2SA1611-M5M6
Q506	8-729-140-63	s	TRANSISTOR 2SA1611-M5M6
Q507	8-729-140-63	s	TRANSISTOR 2SA1611-M5M6
Q508	8-729-140-63	s	TRANSISTOR 2SA1611-M5M6
Q509	8-729-117-32	s	TRANSISTOR 2SC4177
Q510	8-729-117-32	s	TRANSISTOR 2SC4177
Q511	8-729-117-32	s	TRANSISTOR 2SC4177
Q512	8-729-143-07	s	TRANSISTOR 2SA1610-Y33
Q513	8-729-117-32	s	TRANSISTOR 2SC4177
Q514	8-729-117-32	s	TRANSISTOR 2SC4177
Q515	8-729-117-32	s	TRANSISTOR 2SC4177
Q516	8-729-117-32	s	TRANSISTOR 2SC4177
Q517	8-729-117-32	s	TRANSISTOR 2SC4177
Q518	8-729-117-32	s	TRANSISTOR 2SC4177
Q519	8-729-143-07	s	TRANSISTOR 2SA1610-Y33
Q520	8-729-140-63	s	TRANSISTOR 2SA1611-M5M6
Q521	8-729-140-63	s	TRANSISTOR 2SA1611-M5M6
Q522	8-729-140-63	s	TRANSISTOR 2SA1611-M5M6
Q523	8-729-117-32	s	TRANSISTOR 2SC4177
Q524	8-729-140-63	s	TRANSISTOR 2SA1611-M5M6
Q525	8-729-117-32	s	TRANSISTOR 2SC4177
Q526	8-729-140-63	s	TRANSISTOR 2SA1611-M5M6
Q527	8-729-117-32	s	TRANSISTOR 2SC4177
Q528	8-729-140-63	s	TRANSISTOR 2SA1611-M5M6
Q700	8-729-029-14	s	TRANSISTOR DTC144EUA-T106
Q900	8-729-117-32	s	TRANSISTOR 2SC4177
Q901	8-729-117-32	s	TRANSISTOR 2SC4177
Q902	8-729-029-14	s	TRANSISTOR DTC144EUA-T106
Q903	8-729-029-14	s	TRANSISTOR DTC144EUA-T106
Q904	8-729-140-63	s	TRANSISTOR 2SA1611-M5M6
Q905	8-729-140-63	s	TRANSISTOR 2SA1611-M5M6
Q906	8-729-013-37	s	TRANSISTOR 2SC4213-AB-TE85L
Q907	8-729-013-37	s	TRANSISTOR 2SC4213-AB-TE85L
Q908	8-729-013-37	s	TRANSISTOR 2SC4213-AB-TE85L
Q909	8-729-013-37	s	TRANSISTOR 2SC4213-AB-TE85L
Q1100	8-729-140-63	s	TRANSISTOR 2SA1611-M5M6
Q1101	8-729-140-63	s	TRANSISTOR 2SA1611-M5M6
Q1102	8-729-143-07	s	TRANSISTOR 2SA1610-Y33
Q1103	8-729-143-07	s	TRANSISTOR 2SA1610-Y33
Q1104	8-729-117-32	s	TRANSISTOR 2SC4177
Q1105	8-729-117-32	s	TRANSISTOR 2SC4177

(VPR-64 BOARD [SUFFIX 15] for MSW RECORDER)

Ref. No. or Q'ty	Part No.	SP	Description
Q1106	8-729-029-14	s	TRANSISTOR DTC144EUA-T106
Q1107	8-729-029-14	s	TRANSISTOR DTC144EUA-T106
Q1200	8-729-140-63	s	TRANSISTOR 2SA1611-M5M6
Q1201	8-729-140-63	s	TRANSISTOR 2SA1611-M5M6
Q1204	8-729-117-32	s	TRANSISTOR 2SC4177
Q1205	8-729-117-32	s	TRANSISTOR 2SC4177
Q1206	8-729-140-63	s	TRANSISTOR 2SA1611-M5M6
Q1207	8-729-029-14	s	TRANSISTOR DTC144EUA-T106
Q1208	8-729-029-14	s	TRANSISTOR DTC144EUA-T106
Q1209	8-729-140-63	s	TRANSISTOR 2SA1611-M5M6
Q1210	8-729-140-63	s	TRANSISTOR 2SA1611-M5M6
Q1211	8-729-026-58	s	TRANSISTOR FMY3A-T148
Q1212	8-729-026-58	s	TRANSISTOR FMY3A-T148
Q1500	8-729-117-32	s	TRANSISTOR 2SC4177
Q1501	8-729-029-14	s	TRANSISTOR DTC144EUA-T106
Q1590	8-729-140-63	s	TRANSISTOR 2SA1611-M5M6
Q1591	8-729-045-53	s	TRANSISTOR SI4431DY-T1
R100	1-218-668-11	s	RESISTOR,CHIP 100 1/16W (1608)
R101	1-218-692-11	s	RESISTOR,CHIP 1.0K 1/16W(1608)
R102	1-218-704-11	s	RESISTOR,CHIP 3.3K 1/16W(1608)
R103	1-216-857-11	s	RESISTOR,CHIP 1M 1/10W(1608)
R104	1-218-668-11	s	RESISTOR,CHIP 100 1/16W (1608)
R105	1-216-857-11	s	RESISTOR,CHIP 1M 1/10W(1608)
R106	1-218-704-11	s	RESISTOR,CHIP 3.3K 1/16W(1608)
R107	1-218-690-11	s	RESISTOR,CHIP 820 1/16W (1608)
R108	1-218-692-11	s	RESISTOR,CHIP 1.0K 1/16W(1608)
R110	1-218-672-11	s	RESISTOR,CHIP 150 1/16W(1608)
R111	1-218-708-11	s	RESISTOR,CHIP 4.7K 1/16W(1608)
R112	1-218-665-11	s	RESISTOR,CHIP 75 1/16W (1608)
R113	1-218-665-11	s	RESISTOR,CHIP 75 1/16W (1608)
R115	1-218-683-11	s	RESISTOR CHIP 430 1/16W (1608)
R116	1-218-716-11	s	RESISTOR,CHIP 10K 1/16W(1608)
R117	1-218-692-11	s	RESISTOR,CHIP 1.0K 1/16W(1608)
R118	1-218-718-11	s	RESISTOR CHIP 12K 1/16W (1608)
R119	1-218-684-11	s	RESISTOR,CHIP 470 1/16W (1608)
R120	1-218-692-11	s	RESISTOR,CHIP 1.0K 1/16W(1608)
R121	1-218-740-11	s	RESISTOR,CHIP 100K 1/16W(1608)
R122	1-218-740-11	s	RESISTOR,CHIP 100K 1/16W(1608)
R123	1-218-720-11	s	RESISTOR,CHIP 15K 1/16W(1608)
R124	1-218-738-11	s	RESISTOR,CHIP 82K 1/16W(1608)
R125	1-218-738-11	s	RESISTOR,CHIP 82K 1/16W(1608)
R126	1-218-702-11	s	RESISTOR CHIP 2.7K 1/16W(1608)
R128	1-218-716-11	s	RESISTOR,CHIP 10K 1/16W(1608)
R130	1-218-660-91	s	RESISTOR,CHIP 47 1/16W (1608)
R131	1-218-702-11	s	RESISTOR CHIP 2.7K 1/16W(1608)
R132	1-218-696-11	s	RESISTOR,CHIP 1.5K 1/16W(1608)
R133	1-218-712-11	s	RESISTOR,METAL 6.8K 1/16W
R134	1-218-710-11	s	RESISTOR,CHIP 5.6K 1/16W(1608)
R135	1-218-692-11	s	RESISTOR,CHIP 1.0K 1/16W(1608)
R136	1-218-690-11	s	RESISTOR,CHIP 820 1/16W (1608)
R137	1-216-857-11	s	RESISTOR,CHIP 1M 1/10W(1608)
R138	1-218-708-11	s	RESISTOR,CHIP 4.7K 1/16W(1608)
R139	1-218-692-11	s	RESISTOR,CHIP 1.0K 1/16W(1608)
R140	1-216-855-11	s	RESISTOR, CHIP 680K 1/10W 1608
R142	1-218-711-11	s	RESISTOR,METAL 6.2K 1/16W
R143	1-218-704-11	s	RESISTOR,CHIP 3.3K 1/16W(1608)
R144	1-218-716-11	s	RESISTOR,CHIP 10K 1/16W(1608)
R146	1-218-692-11	s	RESISTOR,CHIP 1.0K 1/16W(1608)

(VPR-64 BOARD [SUFFIX 15] for MSW RECORDER)

Ref. No. or Q'ty	Part No.	SP	Description
R147	1-218-732-11	s	RESISTOR,CHIP 47K 1/16W(1608)
R148	1-218-692-11	s	RESISTOR,CHIP 1.0K 1/16W(1608)
R149	1-218-698-11	s	RESISTOR,CHIP 1.8K 1/16W(1608)
R150	1-218-702-11	s	RESISTOR CHIP 2.7K 1/16W(1608)
R151	1-218-708-11	s	RESISTOR,CHIP 4.7K 1/16W(1608)
R152	1-218-702-11	s	RESISTOR CHIP 2.7K 1/16W(1608)
R153	1-218-708-11	s	RESISTOR,CHIP 4.7K 1/16W(1608)
R154	1-218-692-11	s	RESISTOR,CHIP 1.0K 1/16W(1608)
R155	1-218-732-11	s	RESISTOR,CHIP 47K 1/16W(1608)
R156	1-218-700-11	s	RESISTOR,CHIP 2.2K 1/16W(1608)
R157	1-218-716-11	s	RESISTOR,CHIP 10K 1/16W(1608)
R162	1-218-696-11	s	RESISTOR,CHIP 1.5K 1/16W(1608)
R163	1-218-700-11	s	RESISTOR,CHIP 2.2K 1/16W(1608)
R164	1-218-696-11	s	RESISTOR,CHIP 1.5K 1/16W(1608)
R165	1-218-716-11	s	RESISTOR,CHIP 10K 1/16W(1608)
R166	1-218-702-11	s	RESISTOR CHIP 2.7K 1/16W(1608)
R169	1-216-857-11	s	RESISTOR,CHIP 1M 1/10W(1608)
R170	1-218-660-91	s	RESISTOR,CHIP 47 1/16W (1608)
R171	1-218-692-11	s	RESISTOR,CHIP 1.0K 1/16W(1608)
R172	1-218-692-11	s	RESISTOR,CHIP 1.0K 1/16W(1608)
R173	1-216-864-11	s	CONDUCTOR, CHIP (1608)
R174	1-218-708-11	s	RESISTOR,CHIP 4.7K 1/16W(1608)
R175	1-218-713-11	s	RESISTOR,METAL 7.5K 1/16W
R176	1-218-716-11	s	RESISTOR,CHIP 10K 1/16W(1608)
R177	1-218-700-11	s	RESISTOR,CHIP 2.2K 1/16W(1608)
R178	1-218-708-11	s	RESISTOR,CHIP 4.7K 1/16W(1608)
R179	1-218-737-11	s	RESISTOR,CHIP 75K 1/16W
R180	1-218-728-11	s	RESISTOR,CHIP 33K 1/16W
R181	1-218-726-11	s	RESISTOR CHIP 27K 1/16W (1608)
R182	1-218-682-11	s	RESISTOR,CHIP 390 1/16W (1608)
R183	1-218-722-11	s	RESISTOR, CHIP 18K 1/16W 1608
R184	1-218-704-11	s	RESISTOR,CHIP 3.3K 1/16W(1608)
R194	1-218-716-11	s	RESISTOR,CHIP 10K 1/16W(1608)
R195	1-218-716-11	s	RESISTOR,CHIP 10K 1/16W(1608)
R196	1-218-716-11	s	RESISTOR,CHIP 10K 1/16W(1608)
R197	1-218-716-11	s	RESISTOR,CHIP 10K 1/16W(1608)
R198	1-218-704-11	s	RESISTOR,CHIP 3.3K 1/16W(1608)
R199	1-218-652-11	s	RESISTOR,CHIP 22 1/16W (1608)
R201	1-218-676-11	s	RESISTOR,CHIP 220 1/16W(1608)
R202	1-218-692-11	s	RESISTOR,CHIP 1.0K 1/16W(1608)
R203	1-218-696-11	s	RESISTOR,CHIP 1.5K 1/16W(1608)
R204	1-218-710-11	s	RESISTOR,CHIP 5.6K 1/16W(1608)
R207	1-218-712-11	s	RESISTOR,METAL 6.8K 1/16W
R214	1-218-716-11	s	RESISTOR,CHIP 10K 1/16W(1608)
R215	1-218-714-11	s	RESISTOR,CHIP 8.2K 1/16W(1608)
R216	1-218-668-11	s	RESISTOR,CHIP 100 1/16W (1608)
R217	1-218-700-11	s	RESISTOR,CHIP 2.2K 1/16W(1608)
R218	1-218-676-11	s	RESISTOR,CHIP 220 1/16W(1608)
R219	1-218-703-11	s	RESISTOR,CHIP 3.0K 1/16(1608)
R221	1-218-668-11	s	RESISTOR,CHIP 100 1/16W (1608)
R222	1-218-701-11	s	RESISTOR,CHIP 2.4K 1/16W(1608)
R223	1-218-689-11	s	RESISTOR CHIP 750 1/16W (1608)
R224	1-218-681-11	s	RESISTOR CHIP 360 1/16W (1608)
R226	1-218-740-11	s	RESISTOR,CHIP 100K 1/16W(1608)
R227	1-218-704-11	s	RESISTOR,CHIP 3.3K 1/16W(1608)
R228	1-218-724-11	s	RESISTOR,CHIP 22K 1/16W(1608)
R229	1-218-740-11	s	RESISTOR,CHIP 100K 1/16W(1608)
R230	1-218-728-11	s	RESISTOR,CHIP 33K 1/16W
R231	1-218-721-11	s	RESISTOR,CHIP 16K 1/16W(1608)

(VPR-64 BOARD [SUFFIX 15] for MSW RECORDER)

Ref. No. or Q'ty	Part No.	SP	Description
R232	1-218-652-11	s	RESISTOR,CHIP 22 1/16W (1608)
R233	1-218-708-11	s	RESISTOR,CHIP 4.7K 1/16W(1608)
R234	1-218-660-91	s	RESISTOR,CHIP 47 1/16W (1608)
R235	1-218-716-11	s	RESISTOR,CHIP 10K 1/16W(1608)
R236	1-218-716-11	s	RESISTOR,CHIP 10K 1/16W(1608)
R237	1-218-660-91	s	RESISTOR,CHIP 47 1/16W (1608)
R238	1-218-660-91	s	RESISTOR,CHIP 47 1/16W (1608)
R239	1-218-716-11	s	RESISTOR,CHIP 10K 1/16W(1608)
R243	1-216-864-11	s	CONDUCTOR, CHIP (1608)
R244	1-216-864-11	s	CONDUCTOR, CHIP (1608)
R245	1-218-740-11	s	RESISTOR,CHIP 100K 1/16W(1608)
R246	1-218-660-91	s	RESISTOR,CHIP 47 1/16W (1608)
R247	1-218-740-11	s	RESISTOR,CHIP 100K 1/16W(1608)
R248	1-218-692-11	s	RESISTOR,CHIP 1.0K 1/16W(1608)
R252	1-216-864-11	s	CONDUCTOR, CHIP (1608)
R311	1-216-864-11	s	CONDUCTOR, CHIP (1608)
R315	1-218-740-11	s	RESISTOR,CHIP 100K 1/16W(1608)
R317	1-216-864-11	s	CONDUCTOR, CHIP (1608)
R318	1-216-864-11	s	CONDUCTOR, CHIP (1608)
R333	1-218-728-11	s	RESISTOR,CHIP 33K 1/16W
R335	1-218-724-11	s	RESISTOR,CHIP 22K 1/16W(1608)
R336	1-218-715-11	s	RESISTOR,METAL 9.1K 1/16W
R339	1-216-861-11	s	RESISTOR,CHIP 2.2M 1/16W 1608
R340	1-218-720-11	s	RESISTOR,CHIP 15K 1/16W(1608)
R343	1-218-692-11	s	RESISTOR,CHIP 1.0K 1/16W(1608)
R344	1-218-718-11	s	RESISTOR CHIP 12K 1/16W (1608)
R345	1-218-716-11	s	RESISTOR,CHIP 10K 1/16W(1608)
R346	1-218-692-11	s	RESISTOR,CHIP 1.0K 1/16W(1608)
R347	1-218-692-11	s	RESISTOR,CHIP 1.0K 1/16W(1608)
R348	1-218-692-11	s	RESISTOR,CHIP 1.0K 1/16W(1608)
R349	1-218-692-11	s	RESISTOR,CHIP 1.0K 1/16W(1608)
R350	1-218-692-11	s	RESISTOR,CHIP 1.0K 1/16W(1608)
R351	1-218-724-11	s	RESISTOR,CHIP 22K 1/16W(1608)
R352	1-218-728-11	s	RESISTOR,CHIP 33K 1/16W
R353	1-218-732-11	s	RESISTOR,CHIP 47K 1/16W(1608)
R354	1-218-732-11	s	RESISTOR,CHIP 47K 1/16W(1608)
R355	1-218-729-11	s	RESISTOR,CHIP 36K 1/16W(1608)
R356	1-218-720-11	s	RESISTOR,CHIP 15K 1/16W(1608)
R357	1-218-740-11	s	RESISTOR,CHIP 100K 1/16W(1608)
R358	1-218-668-11	s	RESISTOR,CHIP 100 1/16W (1608)
R359	1-218-740-11	s	RESISTOR,CHIP 100K 1/16W(1608)
R360	1-218-668-11	s	RESISTOR,CHIP 100 1/16W (1608)
R361	1-218-752-11	s	RESISTOR,CHIP 330K 1/16W(1608)
R362	1-218-733-11	s	RESISTOR,CHIP 51K 1/16W (1608)
R363	1-218-698-11	s	RESISTOR,CHIP 1.8K 1/16W(1608)
R364	1-218-733-11	s	RESISTOR,CHIP 51K 1/16W (1608)
R365	1-218-672-11	s	RESISTOR,CHIP 150 1/16W(1608)
R366	1-218-688-11	s	RESISTOR,CHIP 680 1/16W(1608)
R368	1-216-864-11	s	CONDUCTOR, CHIP (1608)
R377	1-216-864-11	s	CONDUCTOR, CHIP (1608)
R399	1-216-864-11	s	CONDUCTOR, CHIP (1608)
R407	1-218-700-11	s	RESISTOR,CHIP 2.2K 1/16W(1608)
R409	1-218-668-11	s	RESISTOR,CHIP 100 1/16W (1608)
R410	1-216-863-11	s	RESISTOR,CHIP 3.3M 1/16W 1608
R411	1-216-863-11	s	RESISTOR,CHIP 3.3M 1/16W 1608
R412	1-218-740-11	s	RESISTOR,CHIP 100K 1/16W(1608)
R414	1-218-700-11	s	RESISTOR,CHIP 2.2K 1/16W(1608)
R415	1-218-723-11	s	RESISTOR,CHIP 20K 1/16W(1608)
R416	1-218-723-11	s	RESISTOR,CHIP 20K 1/16W(1608)

(VPR-64 BOARD [SUFFIX 15] for MSW RECORDER)

Ref. No. or Q'ty	Part No.	SP	Description
R420	1-216-857-11	s	RESISTOR,CHIP 1M 1/10W(1608)
R421	1-218-700-11	s	RESISTOR,CHIP 2.2K 1/16W(1608)
R422	1-218-700-11	s	RESISTOR,CHIP 2.2K 1/16W(1608)
R423	1-218-668-11	s	RESISTOR,CHIP 100 1/16W (1608)
R427	1-216-864-11	s	CONDUCTOR, CHIP (1608)
R428	1-216-864-11	s	CONDUCTOR, CHIP (1608)
R429	1-216-864-11	s	CONDUCTOR, CHIP (1608)
R430	1-216-864-11	s	CONDUCTOR, CHIP (1608)
R431	1-216-864-11	s	CONDUCTOR, CHIP (1608)
R432	1-216-864-11	s	CONDUCTOR, CHIP (1608)
R433	1-216-864-11	s	CONDUCTOR, CHIP (1608)
R435	1-216-864-11	s	CONDUCTOR, CHIP (1608)
R439	1-216-864-11	s	CONDUCTOR, CHIP (1608)
R440	1-216-864-11	s	CONDUCTOR, CHIP (1608)
R441	1-216-864-11	s	CONDUCTOR, CHIP (1608)
R443	1-218-724-11	s	RESISTOR,CHIP 22K 1/16W(1608)
R444	1-218-718-11	s	RESISTOR CHIP 12K 1/16W (1608)
R445	1-218-716-11	s	RESISTOR,CHIP 10K 1/16W(1608)
R446	1-218-716-11	s	RESISTOR,CHIP 10K 1/16W(1608)
R447	1-218-676-11	s	RESISTOR,CHIP 220 1/16W(1608)
R449	1-218-660-91	s	RESISTOR,CHIP 47 1/16W (1608)
R450	1-218-668-11	s	RESISTOR,CHIP 100 1/16W (1608)
R453	1-218-668-11	s	RESISTOR,CHIP 100 1/16W (1608)
R454	1-218-668-11	s	RESISTOR,CHIP 100 1/16W (1608)
R500	1-218-668-11	s	RESISTOR,CHIP 100 1/16W (1608)
R501	1-218-708-11	s	RESISTOR,CHIP 4.7K 1/16W(1608)
R502	1-218-680-11	s	RESISTOR,CHIP 330 1/16W(1608)
R504	1-218-732-11	s	RESISTOR,CHIP 47K 1/16W(1608)
R505	1-218-665-11	s	RESISTOR,CHIP 75 1/16W (1608)
R506	1-218-665-11	s	RESISTOR,CHIP 75 1/16W (1608)
R507	1-218-665-11	s	RESISTOR,CHIP 75 1/16W (1608)
R508	1-218-694-11	s	RESISTOR,CHIP 1.2K1/16W(1608)
R509	1-218-690-11	s	RESISTOR,CHIP 820 1/16W (1608)
R510	1-218-681-11	s	RESISTOR CHIP 360 1/16W (1608)
R511	1-218-708-11	s	RESISTOR,CHIP 4.7K 1/16W(1608)
R512	1-218-681-11	s	RESISTOR CHIP 360 1/16W (1608)
R513	1-218-708-11	s	RESISTOR,CHIP 4.7K 1/16W(1608)
R514	1-218-724-11	s	RESISTOR,CHIP 22K 1/16W(1608)
R515	1-218-691-11	s	RESISTOR,CHIP 910 1/16W (1608)
R516	1-218-691-11	s	RESISTOR,CHIP 910 1/16W (1608)
R517	1-218-692-11	s	RESISTOR,CHIP 1.0K 1/16W(1608)
R521	1-218-692-11	s	RESISTOR,CHIP 1.0K 1/16W(1608)
R522	1-218-680-11	s	RESISTOR,CHIP 330 1/16W(1608)
R523	1-218-684-11	s	RESISTOR,CHIP 470 1/16W (1608)
R524	1-218-684-11	s	RESISTOR,CHIP 470 1/16W (1608)
R525	1-218-716-11	s	RESISTOR,CHIP 10K 1/16W(1608)
R527	1-218-732-11	s	RESISTOR,CHIP 47K 1/16W(1608)
R528	1-218-732-11	s	RESISTOR,CHIP 47K 1/16W(1608)
R529	1-218-672-11	s	RESISTOR,CHIP 150 1/16W(1608)
R530	1-218-684-11	s	RESISTOR,CHIP 470 1/16W (1608)
R531	1-218-684-11	s	RESISTOR,CHIP 470 1/16W (1608)
R532	1-218-702-11	s	RESISTOR CHIP 2.7K 1/16W(1608)
R533	1-218-672-11	s	RESISTOR,CHIP 150 1/16W(1608)
R534	1-218-684-11	s	RESISTOR,CHIP 470 1/16W (1608)
R535	1-218-684-11	s	RESISTOR,CHIP 470 1/16W (1608)
R536	1-218-708-11	s	RESISTOR,CHIP 4.7K 1/16W(1608)
R537	1-218-692-11	s	RESISTOR,CHIP 1.0K 1/16W(1608)
R538	1-218-696-11	s	RESISTOR,CHIP 1.5K 1/16W(1608)
R539	1-218-696-11	s	RESISTOR,CHIP 1.5K 1/16W(1608)

(VPR-64 BOARD [SUFFIX 15] for MSW RECORDER)

Ref. No. or Q'ty	Part No.	SP	Description
R540	1-218-665-11	s	RESISTOR,CHIP 75 1/16W (1608)
R541	1-218-644-11	s	RESISTOR,CHIP 10 1/16W
R542	1-218-644-11	s	RESISTOR,CHIP 10 1/16W
R543	1-218-672-11	s	RESISTOR,CHIP 150 1/16W(1608)
R544	1-218-676-11	s	RESISTOR,CHIP 220 1/16W(1608)
R545	1-218-676-11	s	RESISTOR,CHIP 220 1/16W(1608)
R546	1-218-700-11	s	RESISTOR,CHIP 2.2K 1/16W(1608)
R547	1-218-716-11	s	RESISTOR,CHIP 10K 1/16W(1608)
R548	1-216-863-11	s	RESISTOR,CHIP 3.3M 1/16W 1608
R550	1-216-863-11	s	RESISTOR,CHIP 3.3M 1/16W 1608
R551	1-218-696-11	s	RESISTOR,CHIP 1.5K 1/16W(1608)
R552	1-218-676-11	s	RESISTOR,CHIP 220 1/16W(1608)
R553	1-218-696-11	s	RESISTOR,CHIP 1.5K 1/16W(1608)
R554	1-218-676-11	s	RESISTOR,CHIP 220 1/16W(1608)
R555	1-218-696-11	s	RESISTOR,CHIP 1.5K 1/16W(1608)
R556	1-218-676-11	s	RESISTOR,CHIP 220 1/16W(1608)
R557	1-218-668-11	s	RESISTOR,CHIP 100 1/16W (1608)
R558	1-218-668-11	s	RESISTOR,CHIP 100 1/16W (1608)
R559	1-218-668-11	s	RESISTOR,CHIP 100 1/16W (1608)
R560	1-218-708-11	s	RESISTOR,CHIP 4.7K 1/16W(1608)
R561	1-218-708-11	s	RESISTOR,CHIP 4.7K 1/16W(1608)
R562	1-218-708-11	s	RESISTOR,CHIP 4.7K 1/16W(1608)
R564	1-218-700-11	s	RESISTOR,CHIP 2.2K 1/16W(1608)
R565	1-218-692-11	s	RESISTOR,CHIP 1.0K 1/16W(1608)
R566	1-218-692-11	s	RESISTOR,CHIP 1.0K 1/16W(1608)
R567	1-218-692-11	s	RESISTOR,CHIP 1.0K 1/16W(1608)
R568	1-218-716-11	s	RESISTOR,CHIP 10K 1/16W(1608)
R569	1-216-857-11	s	RESISTOR,CHIP 1M 1/10W(1608)
R570	1-218-708-11	s	RESISTOR,CHIP 4.7K 1/16W(1608)
R571	1-218-692-11	s	RESISTOR,CHIP 1.0K 1/16W(1608)
R572	1-218-692-11	s	RESISTOR,CHIP 1.0K 1/16W(1608)
R573	1-218-702-11	s	RESISTOR CHIP 2.7K 1/16W(1608)
R574	1-218-716-11	s	RESISTOR,CHIP 10K 1/16W(1608)
R575	1-218-684-11	s	RESISTOR,CHIP 470 1/16W (1608)
R576	1-218-708-11	s	RESISTOR,CHIP 4.7K 1/16W(1608)
R577	1-218-704-11	s	RESISTOR,CHIP 3.3K 1/16W(1608)
R578	1-218-708-11	s	RESISTOR,CHIP 4.7K 1/16W(1608)
R579	1-218-704-11	s	RESISTOR,CHIP 3.3K 1/16W(1608)
R580	1-216-857-11	s	RESISTOR,CHIP 1M 1/10W(1608)
R581	1-216-857-11	s	RESISTOR,CHIP 1M 1/10W(1608)
R582	1-216-857-11	s	RESISTOR,CHIP 1M 1/10W(1608)
R583	1-218-716-11	s	RESISTOR,CHIP 10K 1/16W(1608)
R584	1-218-716-11	s	RESISTOR,CHIP 10K 1/16W(1608)
R585	1-218-716-11	s	RESISTOR,CHIP 10K 1/16W(1608)
R586	1-218-684-11	s	RESISTOR,CHIP 470 1/16W (1608)
R587	1-218-688-11	s	RESISTOR,CHIP 680 1/16W(1608)
R588	1-218-684-11	s	RESISTOR,CHIP 470 1/16W (1608)
R589	1-218-684-11	s	RESISTOR,CHIP 470 1/16W (1608)
R590	1-218-684-11	s	RESISTOR,CHIP 470 1/16W (1608)
R591	1-218-660-91	s	RESISTOR,CHIP 47 1/16W (1608)
R592	1-218-660-91	s	RESISTOR,CHIP 47 1/16W (1608)
R593	1-218-660-91	s	RESISTOR,CHIP 47 1/16W (1608)
R596	1-218-684-11	s	RESISTOR,CHIP 470 1/16W (1608)
R597	1-218-660-91	s	RESISTOR,CHIP 47 1/16W (1608)
R598	1-218-724-11	s	RESISTOR,CHIP 22K 1/16W(1608)
R599	1-218-692-11	s	RESISTOR,CHIP 1.0K 1/16W(1608)
R600	1-218-692-11	s	RESISTOR,CHIP 1.0K 1/16W(1608)
R601	1-216-864-11	s	CONDUCTOR, CHIP (1608)
R602	1-218-716-11	s	RESISTOR,CHIP 10K 1/16W(1608)

(VPR-64 BOARD [SUFFIX 15] for MSW RECORDER)

Ref. No. or Q'ty	Part No.	SP	Description
R603	1-218-700-11	s	RESISTOR,CHIP 2.2K 1/16W(1608)
R604	1-218-752-11	s	RESISTOR,CHIP 330K 1/16W(1608)
R605	1-218-737-11	s	RESISTOR,CHIP 75K 1/16W
R606	1-218-737-11	s	RESISTOR,CHIP 75K 1/16W
R607	1-218-752-11	s	RESISTOR,CHIP 330K 1/16W(1608)
R608	1-218-728-11	s	RESISTOR,CHIP 33K 1/16W
R609	1-218-718-11	s	RESISTOR CHIP 12K 1/16W (1608)
R610	1-218-684-11	s	RESISTOR,CHIP 470 1/16W (1608)
R611	1-218-684-11	s	RESISTOR,CHIP 470 1/16W (1608)
R612	1-218-684-11	s	RESISTOR,CHIP 470 1/16W (1608)
R613	1-218-684-11	s	RESISTOR,CHIP 470 1/16W (1608)
R614	1-218-716-11	s	RESISTOR,CHIP 10K 1/16W(1608)
R615	1-218-716-11	s	RESISTOR,CHIP 10K 1/16W(1608)
R616	1-218-716-11	s	RESISTOR,CHIP 10K 1/16W(1608)
R617	1-218-716-11	s	RESISTOR,CHIP 10K 1/16W(1608)
R618	1-218-676-11	s	RESISTOR,CHIP 220 1/16W(1608)
R620	1-218-676-11	s	RESISTOR,CHIP 220 1/16W(1608)
R621	1-218-676-11	s	RESISTOR,CHIP 220 1/16W(1608)
R623	1-218-676-11	s	RESISTOR,CHIP 220 1/16W(1608)
R624	1-216-864-11	s	CONDUCTOR, CHIP (1608)
R625	1-216-864-11	s	CONDUCTOR, CHIP (1608)
R626	1-218-716-11	s	RESISTOR,CHIP 10K 1/16W(1608)
R627	1-218-684-11	s	RESISTOR,CHIP 470 1/16W (1608)
R628	1-218-716-11	s	RESISTOR,CHIP 10K 1/16W(1608)
R629	1-218-684-11	s	RESISTOR,CHIP 470 1/16W (1608)
R630	1-218-668-11	s	RESISTOR,CHIP 100 1/16W (1608)
R631	1-218-668-11	s	RESISTOR,CHIP 100 1/16W (1608)
R632	1-218-690-11	s	RESISTOR,CHIP 820 1/16W (1608)
R633	1-218-716-11	s	RESISTOR,CHIP 10K 1/16W(1608)
R634	1-218-752-11	s	RESISTOR,CHIP 330K 1/16W(1608)
R635	1-218-700-11	s	RESISTOR,CHIP 2.2K 1/16W(1608)
R636	1-218-737-11	s	RESISTOR,CHIP 75K 1/16W
R637	1-218-728-11	s	RESISTOR,CHIP 33K 1/16W
R638	1-218-726-11	s	RESISTOR CHIP 27K 1/16W (1608)
R639	1-218-716-11	s	RESISTOR,CHIP 10K 1/16W(1608)
R640	1-218-716-11	s	RESISTOR,CHIP 10K 1/16W(1608)
R641	1-218-676-11	s	RESISTOR,CHIP 220 1/16W(1608)
R643	1-218-676-11	s	RESISTOR,CHIP 220 1/16W(1608)
R644	1-218-660-91	s	RESISTOR,CHIP 47 1/16W (1608)
R645	1-218-668-11	s	RESISTOR,CHIP 100 1/16W (1608)
R646	1-218-668-11	s	RESISTOR,CHIP 100 1/16W (1608)
R700	1-218-676-11	s	RESISTOR,CHIP 220 1/16W(1608)
R701	1-218-668-11	s	RESISTOR,CHIP 100 1/16W (1608)
R703	1-218-716-11	s	RESISTOR,CHIP 10K 1/16W(1608)
R706	1-218-740-11	s	RESISTOR,CHIP 100K 1/16W(1608)
R708	1-218-668-11	s	RESISTOR,CHIP 100 1/16W (1608)
R711	1-218-740-11	s	RESISTOR,CHIP 100K 1/16W(1608)
R712	1-218-740-11	s	RESISTOR,CHIP 100K 1/16W(1608)
R713	1-218-740-11	s	RESISTOR,CHIP 100K 1/16W(1608)
R727	1-218-716-11	s	RESISTOR,CHIP 10K 1/16W(1608)
R729	1-216-864-11	s	CONDUCTOR, CHIP (1608)
R733	1-218-708-11	s	RESISTOR,CHIP 4.7K 1/16W(1608)
R734	1-218-680-11	s	RESISTOR,CHIP 330 1/16W(1608)
R735	1-218-708-11	s	RESISTOR,CHIP 4.7K 1/16W(1608)
R736	1-218-708-11	s	RESISTOR,CHIP 4.7K 1/16W(1608)
R741	1-218-668-11	s	RESISTOR,CHIP 100 1/16W (1608)
R742	1-218-668-11	s	RESISTOR,CHIP 100 1/16W (1608)
R743	1-216-864-11	s	CONDUCTOR, CHIP (1608)
R752	1-216-864-11	s	CONDUCTOR, CHIP (1608)

(VPR-64 BOARD [SUFFIX 15] for MSW RECORDER)

Ref. No. or Q'ty	Part No.	SP	Description
R753	1-218-660-91	s	RESISTOR,CHIP 47 1/16W (1608)
R754	1-218-660-91	s	RESISTOR,CHIP 47 1/16W (1608)
R755	1-218-660-91	s	RESISTOR,CHIP 47 1/16W (1608)
R800	1-218-716-11	s	RESISTOR,CHIP 10K 1/16W(1608)
R801	1-218-716-11	s	RESISTOR,CHIP 10K 1/16W(1608)
R802	1-218-679-11	s	RESISTOR,CHIP 300 1/16W (1608)
R803	1-218-716-11	s	RESISTOR,CHIP 10K 1/16W(1608)
R804	1-218-716-11	s	RESISTOR,CHIP 10K 1/16W(1608)
R805	1-218-716-11	s	RESISTOR,CHIP 10K 1/16W(1608)
R806	1-218-660-91	s	RESISTOR,CHIP 47 1/16W (1608)
R807	1-218-676-11	s	RESISTOR,CHIP 220 1/16W(1608)
R901	1-218-752-11	s	RESISTOR,CHIP 330K 1/16W(1608)
R905	1-218-733-11	s	RESISTOR,CHIP 51K 1/16W (1608)
R906	1-218-698-11	s	RESISTOR,CHIP 1.8K 1/16W(1608)
R907	1-218-733-11	s	RESISTOR,CHIP 51K 1/16W (1608)
R908	1-218-723-11	s	RESISTOR,CHIP 20K 1/16W(1608)
R909	1-218-721-11	s	RESISTOR,CHIP 16K 1/16W(1608)
R910	1-218-723-11	s	RESISTOR,CHIP 20K 1/16W(1608)
R911	1-218-721-11	s	RESISTOR,CHIP 16K 1/16W(1608)
R912	1-218-732-11	s	RESISTOR,CHIP 47K 1/16W(1608)
R913	1-218-723-11	s	RESISTOR,CHIP 20K 1/16W(1608)
R914	1-218-721-11	s	RESISTOR,CHIP 16K 1/16W(1608)
R915	1-218-740-11	s	RESISTOR,CHIP 100K 1/16W(1608)
R916	1-216-864-11	s	CONDUCTOR, CHIP (1608)
R921	1-216-864-11	s	CONDUCTOR, CHIP (1608)
R924	1-218-668-11	s	RESISTOR,CHIP 100 1/16W (1608)
R925	1-218-668-11	s	RESISTOR,CHIP 100 1/16W (1608)
R926	1-218-668-11	s	RESISTOR,CHIP 100 1/16W (1608)
R927	1-218-668-11	s	RESISTOR,CHIP 100 1/16W (1608)
R932	1-218-702-11	s	RESISTOR CHIP 2.7K 1/16W(1608)
R933	1-218-702-11	s	RESISTOR CHIP 2.7K 1/16W(1608)
R934	1-218-702-11	s	RESISTOR CHIP 2.7K 1/16W(1608)
R935	1-218-668-11	s	RESISTOR,CHIP 100 1/16W (1608)
R938	1-216-864-11	s	CONDUCTOR, CHIP (1608)
R939	1-216-864-11	s	CONDUCTOR, CHIP (1608)
R953	1-218-716-11	s	RESISTOR,CHIP 10K 1/16W(1608)
R954	1-218-716-11	s	RESISTOR,CHIP 10K 1/16W(1608)
R955	1-216-853-11	s	RESISTOR,CHIP 470K 1/16W(1608)
R956	1-218-708-11	s	RESISTOR,CHIP 4.7K 1/16W(1608)
R957	1-218-652-11	s	RESISTOR,CHIP 22 1/16W (1608)
R960	1-218-716-11	s	RESISTOR,CHIP 10K 1/16W(1608)
R961	1-218-694-11	s	RESISTOR,CHIP 1.2K1/16W(1608)
R962	1-218-728-11	s	RESISTOR,CHIP 33K 1/16W
R963	1-218-720-11	s	RESISTOR,CHIP 15K 1/16W(1608)
R964	1-218-721-11	s	RESISTOR,CHIP 16K 1/16W(1608)
R965	1-216-857-11	s	RESISTOR,CHIP 1M 1/10W(1608)
R966	1-218-728-11	s	RESISTOR,CHIP 33K 1/16W
R967	1-218-720-11	s	RESISTOR,CHIP 15K 1/16W(1608)
R968	1-218-721-11	s	RESISTOR,CHIP 16K 1/16W(1608)
R969	1-218-737-11	s	RESISTOR,CHIP 75K 1/16W
R970	1-218-720-11	s	RESISTOR,CHIP 15K 1/16W(1608)
R971	1-218-719-11	s	RESISTOR,METAL 13K 1/16
R972	1-218-668-11	s	RESISTOR,CHIP 100 1/16W (1608)
R975	1-218-698-11	s	RESISTOR,CHIP 1.8K 1/16W(1608)
R976	1-218-698-11	s	RESISTOR,CHIP 1.8K 1/16W(1608)
R977	1-218-694-11	s	RESISTOR,CHIP 1.2K1/16W(1608)
R979	1-218-680-11	s	RESISTOR,CHIP 330 1/16W(1608)
R980	1-218-708-11	s	RESISTOR,CHIP 4.7K 1/16W(1608)
R981	1-218-668-11	s	RESISTOR,CHIP 100 1/16W (1608)

(VPR-64 BOARD [SUFFIX 15] for MSW RECORDER)

Ref. No. or Q'ty	Part No.	SP	Description
R982	1-218-672-11	s	RESISTOR,CHIP 150 1/16W(1608)
R983	1-218-672-11	s	RESISTOR,CHIP 150 1/16W(1608)
R984	1-218-672-11	s	RESISTOR,CHIP 150 1/16W(1608)
R985	1-218-672-11	s	RESISTOR,CHIP 150 1/16W(1608)
R986	1-218-672-11	s	RESISTOR,CHIP 150 1/16W(1608)
R987	1-218-672-11	s	RESISTOR,CHIP 150 1/16W(1608)
R988	1-218-672-11	s	RESISTOR,CHIP 150 1/16W(1608)
R989	1-218-672-11	s	RESISTOR,CHIP 150 1/16W(1608)
R990	1-218-650-11	s	RESISTOR,CHIP 18 1/16W (1608)
R991	1-218-666-11	s	RESISTOR,CHIP 82 1/16W (1608)
R992	1-218-648-11	s	RESISTOR CHIP 15 1/16W(1608)
R993	1-218-648-11	s	RESISTOR CHIP 15 1/16W(1608)
R994	1-218-650-11	s	RESISTOR,CHIP 18 1/16W (1608)
R995	1-218-666-11	s	RESISTOR,CHIP 82 1/16W (1608)
R996	1-218-698-11	s	RESISTOR,CHIP 1.8K 1/16W(1608)
R997	1-218-695-11	s	RESISTOR,CHIP 1.3K 1/16W(1608)
R998	1-218-695-11	s	RESISTOR,CHIP 1.3K 1/16W(1608)
R999	1-218-698-11	s	RESISTOR,CHIP 1.8K 1/16W(1608)
R1000	1-218-672-11	s	RESISTOR,CHIP 150 1/16W(1608)
R1001	1-218-672-11	s	RESISTOR,CHIP 150 1/16W(1608)
R1002	1-218-672-11	s	RESISTOR,CHIP 150 1/16W(1608)
R1003	1-218-672-11	s	RESISTOR,CHIP 150 1/16W(1608)
R1004	1-218-672-11	s	RESISTOR,CHIP 150 1/16W(1608)
R1005	1-218-672-11	s	RESISTOR,CHIP 150 1/16W(1608)
R1006	1-218-672-11	s	RESISTOR,CHIP 150 1/16W(1608)
R1007	1-218-672-11	s	RESISTOR,CHIP 150 1/16W(1608)
R1008	1-218-708-11	s	RESISTOR,CHIP 4.7K 1/16W(1608)
R1009	1-218-716-11	s	RESISTOR,CHIP 10K 1/16W(1608)
R1010	1-218-708-11	s	RESISTOR,CHIP 4.7K 1/16W(1608)
R1011	1-218-730-11	s	RESISTOR METAL FILM CHIP 39K
R1012	1-218-708-11	s	RESISTOR,CHIP 4.7K 1/16W(1608)
R1013	1-218-730-11	s	RESISTOR METAL FILM CHIP 39K
R1014	1-218-708-11	s	RESISTOR,CHIP 4.7K 1/16W(1608)
R1015	1-218-716-11	s	RESISTOR,CHIP 10K 1/16W(1608)
R1016	1-218-703-11	s	RESISTOR,CHIP 3.0K 1/16(1608)
R1017	1-218-703-11	s	RESISTOR,CHIP 3.0K 1/16(1608)
R1018	1-218-703-11	s	RESISTOR,CHIP 3.0K 1/16(1608)
R1019	1-218-694-11	s	RESISTOR,CHIP 1.2K1/16W(1608)
R1020	1-218-694-11	s	RESISTOR,CHIP 1.2K1/16W(1608)
R1021	1-218-694-11	s	RESISTOR,CHIP 1.2K1/16W(1608)
R1022	1-218-694-11	s	RESISTOR,CHIP 1.2K1/16W(1608)
R1023	1-218-700-11	s	RESISTOR,CHIP 2.2K 1/16W(1608)
R1024	1-216-863-11	s	RESISTOR,CHIP 3.3M 1/16W 1608
R1025	1-216-863-11	s	RESISTOR,CHIP 3.3M 1/16W 1608
R1026	1-216-863-11	s	RESISTOR,CHIP 3.3M 1/16W 1608
R1027	1-216-863-11	s	RESISTOR,CHIP 3.3M 1/16W 1608
R1028	1-218-726-11	s	RESISTOR CHIP 27K 1/16W (1608)
R1029	1-218-692-11	s	RESISTOR,CHIP 1.0K 1/16W(1608)
R1030	1-218-712-11	s	RESISTOR,METAL 6.8K 1/16W
R1031	1-218-692-11	s	RESISTOR,CHIP 1.0K 1/16W(1608)
R1032	1-218-712-11	s	RESISTOR,METAL 6.8K 1/16W
R1033	1-218-692-11	s	RESISTOR,CHIP 1.0K 1/16W(1608)
R1034	1-218-712-11	s	RESISTOR,METAL 6.8K 1/16W
R1035	1-218-692-11	s	RESISTOR,CHIP 1.0K 1/16W(1608)
R1036	1-218-712-11	s	RESISTOR,METAL 6.8K 1/16W
R1037	1-218-720-11	s	RESISTOR,CHIP 15K 1/16W(1608)
R1039	1-218-694-11	s	RESISTOR,CHIP 1.2K1/16W(1608)
R1040	1-218-708-11	s	RESISTOR,CHIP 4.7K 1/16W(1608)
R1041	1-218-692-11	s	RESISTOR,CHIP 1.0K 1/16W(1608)

(VPR-64 BOARD [SUFFIX 15] for MSW RECORDER)

Ref. No. or Q'ty	Part No.	SP	Description
R1042	1-218-692-11	s	RESISTOR,CHIP 1.0K 1/16W(1608)
R1043	1-218-692-11	s	RESISTOR,CHIP 1.0K 1/16W(1608)
R1044	1-218-692-11	s	RESISTOR,CHIP 1.0K 1/16W(1608)
R1045	1-218-692-11	s	RESISTOR,CHIP 1.0K 1/16W(1608)
R1046	1-218-699-11	s	RESISTOR,CHIP 2.0K 1/16W(1608)
R1047	1-218-699-11	s	RESISTOR,CHIP 2.0K 1/16W(1608)
R1048	1-218-704-11	s	RESISTOR,CHIP 3.3K 1/16W(1608)
R1049	1-218-702-11	s	RESISTOR CHIP 2.7K 1/16W(1608)
R1050	1-218-702-11	s	RESISTOR CHIP 2.7K 1/16W(1608)
R1051	1-218-702-11	s	RESISTOR CHIP 2.7K 1/16W(1608)
R1052	1-218-692-11	s	RESISTOR,CHIP 1.0K 1/16W(1608)
R1053	1-218-692-11	s	RESISTOR,CHIP 1.0K 1/16W(1608)
R1054	1-218-692-11	s	RESISTOR,CHIP 1.0K 1/16W(1608)
R1055	1-218-699-11	s	RESISTOR,CHIP 2.0K 1/16W(1608)
R1056	1-218-699-11	s	RESISTOR,CHIP 2.0K 1/16W(1608)
R1057	1-218-699-11	s	RESISTOR,CHIP 2.0K 1/16W(1608)
R1058	1-218-699-11	s	RESISTOR,CHIP 2.0K 1/16W(1608)
R1061	1-218-665-11	s	RESISTOR,CHIP 75 1/16W (1608)
R1062	1-218-665-11	s	RESISTOR,CHIP 75 1/16W (1608)
R1063	1-218-665-11	s	RESISTOR,CHIP 75 1/16W (1608)
R1064	1-218-665-11	s	RESISTOR,CHIP 75 1/16W (1608)
R1065	1-218-665-11	s	RESISTOR,CHIP 75 1/16W (1608)
R1066	1-218-665-11	s	RESISTOR,CHIP 75 1/16W (1608)
R1069	1-218-668-11	s	RESISTOR,CHIP 100 1/16W (1608)
R1070	1-218-668-11	s	RESISTOR,CHIP 100 1/16W (1608)
R1072	1-218-660-91	s	RESISTOR,CHIP 47 1/16W (1608)
R1073	1-218-660-91	s	RESISTOR,CHIP 47 1/16W (1608)
R1074	1-218-668-11	s	RESISTOR,CHIP 100 1/16W (1608)
R1075	1-218-668-11	s	RESISTOR,CHIP 100 1/16W (1608)
R1076	1-218-668-11	s	RESISTOR,CHIP 100 1/16W (1608)
R1077	1-218-708-11	s	RESISTOR,CHIP 4.7K 1/16W(1608)
R1079	1-216-864-11	s	CONDUCTOR, CHIP (1608)
R1080	1-218-716-11	s	RESISTOR,CHIP 10K 1/16W(1608)
R1081	1-218-716-11	s	RESISTOR,CHIP 10K 1/16W(1608)
R1082	1-218-740-11	s	RESISTOR,CHIP 100K 1/16W(1608)
R1083	1-218-716-11	s	RESISTOR,CHIP 10K 1/16W(1608)
R1084	1-218-716-11	s	RESISTOR,CHIP 10K 1/16W(1608)
R1085	1-218-716-11	s	RESISTOR,CHIP 10K 1/16W(1608)
R1086	1-218-716-11	s	RESISTOR,CHIP 10K 1/16W(1608)
R1087	1-218-716-11	s	RESISTOR,CHIP 10K 1/16W(1608)
R1088	1-218-716-11	s	RESISTOR,CHIP 10K 1/16W(1608)
R1089	1-218-716-11	s	RESISTOR,CHIP 10K 1/16W(1608)
R1090	1-218-716-11	s	RESISTOR,CHIP 10K 1/16W(1608)
R1091	1-218-692-11	s	RESISTOR,CHIP 1.0K 1/16W(1608)
R1102	1-218-692-11	s	RESISTOR,CHIP 1.0K 1/16W(1608)
R1103	1-218-660-91	s	RESISTOR,CHIP 47 1/16W (1608)
R1104	1-218-690-11	s	RESISTOR,CHIP 820 1/16W (1608)
R1105	1-218-692-11	s	RESISTOR,CHIP 1.0K 1/16W(1608)
R1106	1-218-692-11	s	RESISTOR,CHIP 1.0K 1/16W(1608)
R1107	1-218-702-11	s	RESISTOR CHIP 2.7K 1/16W(1608)
R1108	1-218-676-11	s	RESISTOR,CHIP 220 1/16W(1608)
R1109	1-218-716-11	s	RESISTOR,CHIP 10K 1/16W(1608)
R1110	1-218-700-11	s	RESISTOR,CHIP 2.2K 1/16W(1608)
R1111	1-218-716-11	s	RESISTOR,CHIP 10K 1/16W(1608)
R1112	1-216-863-11	s	RESISTOR,CHIP 3.3M 1/16W 1608
R1113	1-216-863-11	s	RESISTOR,CHIP 3.3M 1/16W 1608
R1114	1-218-700-11	s	RESISTOR,CHIP 2.2K 1/16W(1608)
R1115	1-218-716-11	s	RESISTOR,CHIP 10K 1/16W(1608)
R1116	1-216-857-11	s	RESISTOR,CHIP 1M 1/10W(1608)

(VPR-64 BOARD [SUFFIX 15] for MSW RECORDER)

Ref. No. or Q'ty	Part No.	SP	Description
R1117	1-218-702-11	s	RESISTOR CHIP 2.7K 1/16W(1608)
R1118	1-218-699-11	s	RESISTOR,CHIP 2.0K 1/16W(1608)
R1119	1-218-704-11	s	RESISTOR,CHIP 3.3K 1/16W(1608)
R1120	1-218-692-11	s	RESISTOR,CHIP 1.0K 1/16W(1608)
R1121	1-218-700-11	s	RESISTOR,CHIP 2.2K 1/16W(1608)
R1122	1-218-708-11	s	RESISTOR,CHIP 4.7K 1/16W(1608)
R1124	1-218-692-11	s	RESISTOR,CHIP 1.0K 1/16W(1608)
R1126	1-218-692-11	s	RESISTOR,CHIP 1.0K 1/16W(1608)
R1127	1-218-694-11	s	RESISTOR,CHIP 1.2K1/16W(1608)
R1129	1-218-724-11	s	RESISTOR,CHIP 22K 1/16W(1608)
R1130	1-218-708-11	s	RESISTOR,CHIP 4.7K 1/16W(1608)
R1132	1-218-708-11	s	RESISTOR,CHIP 4.7K 1/16W(1608)
R1135	1-218-668-11	s	RESISTOR,CHIP 100 1/16W (1608)
R1136	1-218-668-11	s	RESISTOR,CHIP 100 1/16W (1608)
R1138	1-218-668-11	s	RESISTOR,CHIP 100 1/16W (1608)
R1139	1-218-692-11	s	RESISTOR,CHIP 1.0K 1/16W(1608)
R1140	1-218-692-11	s	RESISTOR,CHIP 1.0K 1/16W(1608)
R1141	1-218-692-11	s	RESISTOR,CHIP 1.0K 1/16W(1608)
R1142	1-218-692-11	s	RESISTOR,CHIP 1.0K 1/16W(1608)
R1143	1-218-652-11	s	RESISTOR,CHIP 22 1/16W (1608)
R1144	1-218-652-11	s	RESISTOR,CHIP 22 1/16W (1608)
R1145	1-218-652-11	s	RESISTOR,CHIP 22 1/16W (1608)
R1146	1-218-652-11	s	RESISTOR,CHIP 22 1/16W (1608)
R1148	1-218-668-11	s	RESISTOR,CHIP 100 1/16W (1608)
R1149	1-218-716-11	s	RESISTOR,CHIP 10K 1/16W(1608)
R1150	1-218-716-11	s	RESISTOR,CHIP 10K 1/16W(1608)
R1153	1-218-716-11	s	RESISTOR,CHIP 10K 1/16W(1608)
R1154	1-218-692-11	s	RESISTOR,CHIP 1.0K 1/16W(1608)
R1155	1-218-692-11	s	RESISTOR,CHIP 1.0K 1/16W(1608)
R1156	1-218-692-11	s	RESISTOR,CHIP 1.0K 1/16W(1608)
R1157	1-216-864-11	s	CONDUCTOR, CHIP (1608)
R1158	1-218-740-11	s	RESISTOR,CHIP 100K 1/16W(1608)
R1160	1-218-740-11	s	RESISTOR,CHIP 100K 1/16W(1608)
R1161	1-218-716-11	s	RESISTOR,CHIP 10K 1/16W(1608)
R1200	1-218-678-11	s	RESISTOR CHIP 270 1/16W (1608)
R1201	1-218-710-11	s	RESISTOR,CHIP 5.6K 1/16W(1608)
R1202	1-218-710-11	s	RESISTOR,CHIP 5.6K 1/16W(1608)
R1203	1-218-700-11	s	RESISTOR,CHIP 2.2K 1/16W(1608)
R1204	1-218-720-11	s	RESISTOR,CHIP 15K 1/16W(1608)
R1209	1-218-702-11	s	RESISTOR CHIP 2.7K 1/16W(1608)
R1210	1-216-864-11	s	CONDUCTOR, CHIP (1608)
R1211	1-216-864-11	s	CONDUCTOR, CHIP (1608)
R1212	1-216-864-11	s	CONDUCTOR, CHIP (1608)
R1213	1-218-708-11	s	RESISTOR,CHIP 4.7K 1/16W(1608)
R1214	1-216-864-11	s	CONDUCTOR, CHIP (1608)
R1215	1-216-864-11	s	CONDUCTOR, CHIP (1608)
R1216	1-216-864-11	s	CONDUCTOR, CHIP (1608)
R1217	1-216-864-11	s	CONDUCTOR, CHIP (1608)
R1218	1-216-864-11	s	CONDUCTOR, CHIP (1608)
R1219	1-216-864-11	s	CONDUCTOR, CHIP (1608)
R1220	1-216-864-11	s	CONDUCTOR, CHIP (1608)
R1221	1-216-864-11	s	CONDUCTOR, CHIP (1608)
R1222	1-216-864-11	s	CONDUCTOR, CHIP (1608)
R1226	1-218-660-91	s	RESISTOR,CHIP 47 1/16W (1608)
R1227	1-218-684-11	s	RESISTOR,CHIP 470 1/16W (1608)
R1231	1-218-716-11	s	RESISTOR,CHIP 10K 1/16W(1608)
R1232	1-218-716-11	s	RESISTOR,CHIP 10K 1/16W(1608)
R1236	1-218-734-11	s	RESISTOR,CHIP 56K 1/16W(1608)
R1237	1-216-864-11	s	CONDUCTOR, CHIP (1608)

(VPR-64 BOARD [SUFFIX 15] for MSW RECORDER)

Ref. No. or Q'ty	Part No.	SP	Description
R1238	1-218-684-11	s	RESISTOR,CHIP 470 1/16W (1608)
R1239	1-216-857-11	s	RESISTOR,CHIP 1M 1/10W(1608)
R1240	1-216-857-11	s	RESISTOR,CHIP 1M 1/10W(1608)
R1242	1-218-716-11	s	RESISTOR,CHIP 10K 1/16W(1608)
R1243	1-218-740-11	s	RESISTOR,CHIP 100K 1/16W(1608)
R1245	1-218-738-11	s	RESISTOR,CHIP 82K 1/16W(1608)
R1246	1-218-724-11	s	RESISTOR,CHIP 22K 1/16W(1608)
R1247	1-218-724-11	s	RESISTOR,CHIP 22K 1/16W(1608)
R1248	1-218-668-11	s	RESISTOR,CHIP 100 1/16W (1608)
R1249	1-216-859-11	s	RESISTOR,CHIP 1.5M 1/16W 1608
R1250	1-218-668-11	s	RESISTOR,CHIP 100 1/16W (1608)
R1252	1-218-732-11	s	RESISTOR,CHIP 47K 1/16W(1608)
R1253	1-218-692-11	s	RESISTOR,CHIP 1.0K 1/16W(1608)
R1254	1-218-708-11	s	RESISTOR,CHIP 4.7K 1/16W(1608)
R1256	1-216-853-11	s	RESISTOR,CHIP 470K 1/16W(1608)
R1257	1-218-723-11	s	RESISTOR,CHIP 20K 1/16W(1608)
R1258	1-218-700-11	s	RESISTOR,CHIP 2.2K 1/16W(1608)
R1259	1-218-708-11	s	RESISTOR,CHIP 4.7K 1/16W(1608)
R1260	1-218-727-11	s	RESISTOR,CHIP 30K 1/16W(1608)
R1261	1-218-684-11	s	RESISTOR,CHIP 470 1/16W (1608)
R1262	1-218-690-11	s	RESISTOR,CHIP 820 1/16W (1608)
R1263	1-216-857-11	s	RESISTOR,CHIP 1M 1/10W(1608)
R1264	1-218-660-91	s	RESISTOR,CHIP 47 1/16W (1608)
R1266	1-218-692-11	s	RESISTOR,CHIP 1.0K 1/16W(1608)
R1267	1-218-684-11	s	RESISTOR,CHIP 470 1/16W (1608)
R1269	1-218-716-11	s	RESISTOR,CHIP 10K 1/16W(1608)
R1270	1-218-716-11	s	RESISTOR,CHIP 10K 1/16W(1608)
R1271	1-218-716-11	s	RESISTOR,CHIP 10K 1/16W(1608)
R1272	1-218-728-11	s	RESISTOR,CHIP 33K 1/16W
R1274	1-218-736-11	s	RESISTOR,CHIP 68K 1/16W(1608)
R1275	1-218-684-11	s	RESISTOR,CHIP 470 1/16W (1608)
R1276	1-218-692-11	s	RESISTOR,CHIP 1.0K 1/16W(1608)
R1277	1-218-692-11	s	RESISTOR,CHIP 1.0K 1/16W(1608)
R1278	1-218-716-11	s	RESISTOR,CHIP 10K 1/16W(1608)
R1279	1-218-716-11	s	RESISTOR,CHIP 10K 1/16W(1608)
R1280	1-218-708-11	s	RESISTOR,CHIP 4.7K 1/16W(1608)
R1281	1-218-726-11	s	RESISTOR CHIP 27K 1/16W (1608)
R1282	1-218-660-91	s	RESISTOR,CHIP 47 1/16W (1608)
R1283	1-218-660-91	s	RESISTOR,CHIP 47 1/16W (1608)
R1284	1-218-700-11	s	RESISTOR,CHIP 2.2K 1/16W(1608)
R1285	1-218-713-11	s	RESISTOR,METAL 7.5K 1/16W
R1286	1-218-712-11	s	RESISTOR,METAL 6.8K 1/16W
R1287	1-218-719-11	s	RESISTOR,METAL 13K 1/16
R1288	1-218-668-11	s	RESISTOR,CHIP 100 1/16W (1608)
R1289	1-218-730-11	s	RESISTOR METAL FILM CHIP 39K
R1290	1-218-689-11	s	RESISTOR CHIP 750 1/16W (1608)
R1291	1-218-700-11	s	RESISTOR,CHIP 2.2K 1/16W(1608)
R1292	1-218-660-91	s	RESISTOR,CHIP 47 1/16W (1608)
R1293	1-218-740-11	s	RESISTOR,CHIP 100K 1/16W(1608)
R1294	1-218-716-11	s	RESISTOR,CHIP 10K 1/16W(1608)
R1295	1-218-740-11	s	RESISTOR,CHIP 100K 1/16W(1608)
R1296	1-218-724-11	s	RESISTOR,CHIP 22K 1/16W(1608)
R1297	1-218-722-11	s	RESISTOR, CHIP 18K 1/16W 1608
R1298	1-218-692-11	s	RESISTOR,CHIP 1.0K 1/16W(1608)
R1299	1-218-716-11	s	RESISTOR,CHIP 10K 1/16W(1608)
R1300	1-218-719-11	s	RESISTOR,METAL 13K 1/16
R1301	1-218-716-11	s	RESISTOR,CHIP 10K 1/16W(1608)
R1302	1-218-740-11	s	RESISTOR,CHIP 100K 1/16W(1608)
R1305	1-218-668-11	s	RESISTOR,CHIP 100 1/16W (1608)

(VPR-64 BOARD [SUFFIX 15] for MSW RECORDER)

Ref. No. or Q'ty	Part No.	SP	Description
R1310	1-218-723-11	s	RESISTOR,CHIP 20K 1/16W(1608)
R1311	1-218-723-11	s	RESISTOR,CHIP 20K 1/16W(1608)
R1312	1-218-917-11	s	RESISTOR,CHIP 820K 1/10W(1608)
R1313	1-218-917-11	s	RESISTOR,CHIP 820K 1/10W(1608)
R1314	1-216-857-11	s	RESISTOR,CHIP 1M 1/10W(1608)
R1315	1-218-668-11	s	RESISTOR,CHIP 100 1/16W (1608)
R1316	1-218-668-11	s	RESISTOR,CHIP 100 1/16W (1608)
R1317	1-218-668-11	s	RESISTOR,CHIP 100 1/16W (1608)
R1318	1-218-668-11	s	RESISTOR,CHIP 100 1/16W (1608)
R1319	1-218-668-11	s	RESISTOR,CHIP 100 1/16W (1608)
R1320	1-218-668-11	s	RESISTOR,CHIP 100 1/16W (1608)
R1321	1-218-668-11	s	RESISTOR,CHIP 100 1/16W (1608)
R1322	1-218-668-11	s	RESISTOR,CHIP 100 1/16W (1608)
R1323	1-218-668-11	s	RESISTOR,CHIP 100 1/16W (1608)
R1324	1-218-668-11	s	RESISTOR,CHIP 100 1/16W (1608)
R1325	1-218-739-11	s	RESISTOR,CHIP 91K 1/16W(1608)
R1326	1-218-739-11	s	RESISTOR,CHIP 91K 1/16W(1608)
R1327	1-218-716-11	s	RESISTOR,CHIP 10K 1/16W(1608)
R1328	1-218-716-11	s	RESISTOR,CHIP 10K 1/16W(1608)
R1329	1-218-668-11	s	RESISTOR,CHIP 100 1/16W (1608)
R1330	1-218-716-11	s	RESISTOR,CHIP 10K 1/16W(1608)
R1331	1-218-724-11	s	RESISTOR,CHIP 22K 1/16W(1608)
R1332	1-218-668-11	s	RESISTOR,CHIP 100 1/16W (1608)
R1333	1-218-668-11	s	RESISTOR,CHIP 100 1/16W (1608)
R1334	1-218-668-11	s	RESISTOR,CHIP 100 1/16W (1608)
R1336	1-216-864-11	s	CONDUCTOR, CHIP (1608)
R1337	1-218-652-11	s	RESISTOR,CHIP 22 1/16W (1608)
R1338	1-218-716-11	s	RESISTOR,CHIP 10K 1/16W(1608)
R1339	1-218-716-11	s	RESISTOR,CHIP 10K 1/16W(1608)
R1340	1-218-693-11	s	RESISTOR,CHIP 1.1K 1/16W(1608)
R1343	1-216-864-11	s	CONDUCTOR, CHIP (1608)
R1344	1-216-864-11	s	CONDUCTOR, CHIP (1608)
R1345	1-218-684-11	s	RESISTOR,CHIP 470 1/16W (1608)
R1346	1-218-735-11	s	RESISTOR CHIP 62K 1/16W(1608)
R1347	1-218-668-11	s	RESISTOR,CHIP 100 1/16W (1608)
R1348	1-218-668-11	s	RESISTOR,CHIP 100 1/16W (1608)
R1349	1-218-668-11	s	RESISTOR,CHIP 100 1/16W (1608)
R1350	1-218-668-11	s	RESISTOR,CHIP 100 1/16W (1608)
R1382	1-216-864-11	s	CONDUCTOR, CHIP (1608)
R1383	1-216-864-11	s	CONDUCTOR, CHIP (1608)
R1385	1-218-680-11	s	RESISTOR,CHIP 330 1/16W(1608)
R1386	1-218-692-11	s	RESISTOR,CHIP 1.0K 1/16W(1608)
R1387	1-218-692-11	s	RESISTOR,CHIP 1.0K 1/16W(1608)
R1388	1-218-704-11	s	RESISTOR,CHIP 3.3K 1/16W(1608)
R1389	1-218-700-11	s	RESISTOR,CHIP 2.2K 1/16W(1608)
R1390	1-218-705-11	s	RESISTOR,CHIP 3.6K 1/16W(1608)
R1392	1-216-864-11	s	CONDUCTOR, CHIP (1608)
R1393	1-218-660-91	s	RESISTOR,CHIP 47 1/16W (1608)
R1401	1-218-660-91	s	RESISTOR,CHIP 47 1/16W (1608)
R1402	1-216-864-11	s	CONDUCTOR, CHIP (1608)
R1403	1-218-660-91	s	RESISTOR,CHIP 47 1/16W (1608)
R1404	1-218-740-11	s	RESISTOR,CHIP 100K 1/16W(1608)
R1405	1-216-864-11	s	CONDUCTOR, CHIP (1608)
R1406	1-218-660-91	s	RESISTOR,CHIP 47 1/16W (1608)
R1407	1-218-684-11	s	RESISTOR,CHIP 470 1/16W (1608)
R1409	1-216-864-11	s	CONDUCTOR, CHIP (1608)
R1410	1-218-684-11	s	RESISTOR,CHIP 470 1/16W (1608)
R1411	1-218-684-11	s	RESISTOR,CHIP 470 1/16W (1608)
R1412	1-218-740-11	s	RESISTOR,CHIP 100K 1/16W(1608)

(VPR-64 BOARD [SUFFIX 15] for MSW RECORDER)

Ref. No. or Q'ty	Part No.	SP	Description
R1413	1-216-864-11	s	CONDUCTOR, CHIP (1608)
R1414	1-216-864-11	s	CONDUCTOR, CHIP (1608)
R1415	1-218-740-11	s	RESISTOR,CHIP 100K 1/16W(1608)
R1416	1-218-702-11	s	RESISTOR CHIP 2.7K 1/16W(1608)
R1419	1-218-702-11	s	RESISTOR CHIP 2.7K 1/16W(1608)
R1420	1-218-702-11	s	RESISTOR CHIP 2.7K 1/16W(1608)
R1421	1-218-740-11	s	RESISTOR,CHIP 100K 1/16W(1608)
R1422	1-216-864-11	s	CONDUCTOR, CHIP (1608)
R1423	1-218-716-11	s	RESISTOR,CHIP 10K 1/16W(1608)
R1424	1-218-684-11	s	RESISTOR,CHIP 470 1/16W (1608)
R1427	1-218-716-11	s	RESISTOR,CHIP 10K 1/16W(1608)
R1428	1-218-684-11	s	RESISTOR,CHIP 470 1/16W (1608)
R1429	1-218-716-11	s	RESISTOR,CHIP 10K 1/16W(1608)
R1430	1-218-684-11	s	RESISTOR,CHIP 470 1/16W (1608)
R1431	1-218-716-11	s	RESISTOR,CHIP 10K 1/16W(1608)
R1432	1-218-684-11	s	RESISTOR,CHIP 470 1/16W (1608)
R1433	1-218-668-11	s	RESISTOR,CHIP 100 1/16W (1608)
R1435	1-218-668-11	s	RESISTOR,CHIP 100 1/16W (1608)
R1436	1-218-668-11	s	RESISTOR,CHIP 100 1/16W (1608)
R1437	1-218-668-11	s	RESISTOR,CHIP 100 1/16W (1608)
R1438	1-218-684-11	s	RESISTOR,CHIP 470 1/16W (1608)
R1439	1-218-684-11	s	RESISTOR,CHIP 470 1/16W (1608)
R1440	1-218-660-91	s	RESISTOR,CHIP 47 1/16W (1608)
R1441	1-218-702-11	s	RESISTOR CHIP 2.7K 1/16W(1608)
R1442	1-218-716-11	s	RESISTOR,CHIP 10K 1/16W(1608)
R1443	1-218-668-11	s	RESISTOR,CHIP 100 1/16W (1608)
R1444	1-218-660-91	s	RESISTOR,CHIP 47 1/16W (1608)
R1445	1-218-660-91	s	RESISTOR,CHIP 47 1/16W (1608)
R1446	1-218-660-91	s	RESISTOR,CHIP 47 1/16W (1608)
R1447	1-218-660-91	s	RESISTOR,CHIP 47 1/16W (1608)
R1448	1-218-660-91	s	RESISTOR,CHIP 47 1/16W (1608)
R1449	1-218-660-91	s	RESISTOR,CHIP 47 1/16W (1608)
R1450	1-218-652-11	s	RESISTOR,CHIP 22 1/16W (1608)
R1451	1-218-740-11	s	RESISTOR,CHIP 100K 1/16W(1608)
R1452	1-216-864-11	s	CONDUCTOR, CHIP (1608)
R1453	1-216-864-11	s	CONDUCTOR, CHIP (1608)
R1454	1-216-864-11	s	CONDUCTOR, CHIP (1608)
R1455	1-216-864-11	s	CONDUCTOR, CHIP (1608)
R1456	1-216-864-11	s	CONDUCTOR, CHIP (1608)
R1457	1-218-660-91	s	RESISTOR,CHIP 47 1/16W (1608)
R1500	1-218-660-91	s	RESISTOR,CHIP 47 1/16W (1608)
R1501	1-218-716-11	s	RESISTOR,CHIP 10K 1/16W(1608)
R1502	1-218-668-11	s	RESISTOR,CHIP 100 1/16W (1608)
R1503	1-218-676-11	s	RESISTOR,CHIP 220 1/16W(1608)
R1504	1-218-676-11	s	RESISTOR,CHIP 220 1/16W(1608)
R1505	1-218-676-11	s	RESISTOR,CHIP 220 1/16W(1608)
R1506	1-218-676-11	s	RESISTOR,CHIP 220 1/16W(1608)
R1507	1-218-676-11	s	RESISTOR,CHIP 220 1/16W(1608)
R1508	1-218-676-11	s	RESISTOR,CHIP 220 1/16W(1608)
R1509	1-218-676-11	s	RESISTOR,CHIP 220 1/16W(1608)
R1510	1-218-676-11	s	RESISTOR,CHIP 220 1/16W(1608)
R1511	1-218-676-11	s	RESISTOR,CHIP 220 1/16W(1608)
R1512	1-218-676-11	s	RESISTOR,CHIP 220 1/16W(1608)
R1513	1-218-676-11	s	RESISTOR,CHIP 220 1/16W(1608)
R1514	1-218-676-11	s	RESISTOR,CHIP 220 1/16W(1608)
R1515	1-218-676-11	s	RESISTOR,CHIP 220 1/16W(1608)
R1516	1-218-676-11	s	RESISTOR,CHIP 220 1/16W(1608)
R1517	1-218-676-11	s	RESISTOR,CHIP 220 1/16W(1608)
R1518	1-218-676-11	s	RESISTOR,CHIP 220 1/16W(1608)

(VPR-64 BOARD [SUFFIX 15] for MSW RECORDER)

Ref. No. or Q'ty	Part No.	SP	Description
R1519	1-218-740-11	s	RESISTOR,CHIP 100K 1/16W(1608)
R1520	1-218-676-11	s	RESISTOR,CHIP 220 1/16W(1608)
R1521	1-216-864-11	s	CONDUCTOR, CHIP (1608)
R1522	1-216-864-11	s	CONDUCTOR, CHIP (1608)
R1523	1-216-864-11	s	CONDUCTOR, CHIP (1608)
R1524	1-218-732-11	s	RESISTOR,CHIP 47K 1/16W(1608)
R1525	1-218-682-11	s	RESISTOR,CHIP 390 1/16W (1608)
R1526	1-218-716-11	s	RESISTOR,CHIP 10K 1/16W(1608)
R1527	1-218-716-11	s	RESISTOR,CHIP 10K 1/16W(1608)
R1530	1-218-652-11	s	RESISTOR,CHIP 22 1/16W (1608)
R1531	1-218-652-11	s	RESISTOR,CHIP 22 1/16W (1608)
R1532	1-218-652-11	s	RESISTOR,CHIP 22 1/16W (1608)
R1533	1-218-652-11	s	RESISTOR,CHIP 22 1/16W (1608)
R1534	1-218-652-11	s	RESISTOR,CHIP 22 1/16W (1608)
R1535	1-218-652-11	s	RESISTOR,CHIP 22 1/16W (1608)
R1536	1-218-652-11	s	RESISTOR,CHIP 22 1/16W (1608)
R1537	1-218-652-11	s	RESISTOR,CHIP 22 1/16W (1608)
R1538	1-218-740-11	s	RESISTOR,CHIP 100K 1/16W(1608)
R1539	1-218-740-11	s	RESISTOR,CHIP 100K 1/16W(1608)
R1540	1-218-740-11	s	RESISTOR,CHIP 100K 1/16W(1608)
R1541	1-218-740-11	s	RESISTOR,CHIP 100K 1/16W(1608)
R1544	1-218-740-11	s	RESISTOR,CHIP 100K 1/16W(1608)
R1545	1-218-740-11	s	RESISTOR,CHIP 100K 1/16W(1608)
R1546	1-218-708-11	s	RESISTOR,CHIP 4.7K 1/16W(1608)
R1547	1-218-708-11	s	RESISTOR,CHIP 4.7K 1/16W(1608)
R1548	1-218-716-11	s	RESISTOR,CHIP 10K 1/16W(1608)
R1549	1-218-716-11	s	RESISTOR,CHIP 10K 1/16W(1608)
R1550	1-218-692-11	s	RESISTOR,CHIP 1.0K 1/16W(1608)
R1551	1-218-692-11	s	RESISTOR,CHIP 1.0K 1/16W(1608)
R1552	1-218-692-11	s	RESISTOR,CHIP 1.0K 1/16W(1608)
R1553	1-218-708-11	s	RESISTOR,CHIP 4.7K 1/16W(1608)
R1554	1-218-716-11	s	RESISTOR,CHIP 10K 1/16W(1608)
R1555	1-218-652-11	s	RESISTOR,CHIP 22 1/16W (1608)
R1556	1-218-660-91	s	RESISTOR,CHIP 47 1/16W (1608)
R1557	1-218-740-11	s	RESISTOR,CHIP 100K 1/16W(1608)
R1558	1-216-864-11	s	CONDUCTOR, CHIP (1608)
R1590	1-218-692-11	s	RESISTOR,CHIP 1.0K 1/16W(1608)
R1591	1-218-692-11	s	RESISTOR,CHIP 1.0K 1/16W(1608)
R1592	1-218-680-11	s	RESISTOR,CHIP 330 1/16W(1608)
R1593	1-218-680-11	s	RESISTOR,CHIP 330 1/16W(1608)
R1594	1-218-716-11	s	RESISTOR,CHIP 10K 1/16W(1608)
RB700	1-239-416-11	s	NETWORK,RESISTOR 220 (1608)
RB701	1-239-416-11	s	NETWORK,RESISTOR 220 (1608)
RB702	1-239-416-11	s	NETWORK,RESISTOR 220 (1608)
RB703	1-239-416-11	s	NETWORK,RESISTOR 220 (1608)
RB704	1-239-416-11	s	NETWORK,RESISTOR 220 (1608)
RB705	1-239-416-11	s	NETWORK,RESISTOR 220 (1608)
RB719	1-236-908-11	s	RESISTOR,NETWORK 10K (3216)
RB720	1-236-908-11	s	RESISTOR,NETWORK 10K (3216)
RB800	1-239-416-11	s	NETWORK,RESISTOR 220 (1608)
RB801	1-239-416-11	s	NETWORK,RESISTOR 220 (1608)
RB802	1-239-416-11	s	NETWORK,RESISTOR 220 (1608)
RB803	1-239-416-11	s	NETWORK,RESISTOR 220 (1608)
RB804	1-239-416-11	s	NETWORK,RESISTOR 220 (1608)
RB805	1-239-416-11	s	NETWORK,RESISTOR 220 (1608)
RB806	1-239-416-11	s	NETWORK,RESISTOR 220 (1608)
RB807	1-239-416-11	s	NETWORK,RESISTOR 220 (1608)
RB808	1-239-416-11	s	NETWORK,RESISTOR 220 (1608)

(VPR-64 BOARD [SUFFIX 15] for MSW RECORDER)

Ref. No. or Q'ty	Part No.	SP	Description
RB809	1-239-416-11	s	NETWORK,RESISTOR 220 (1608)
RB1100	1-239-416-11	s	NETWORK,RESISTOR 220 (1608)
RB1101	1-239-416-11	s	NETWORK,RESISTOR 220 (1608)
RB1500	1-234-397-11	s	NETWORK, RES (8 GANG) 100K
RB1501	1-234-397-11	s	NETWORK, RES (8 GANG) 100K
RB1502	1-234-397-11	s	NETWORK, RES (8 GANG) 100K
RB1503	1-234-397-11	s	NETWORK, RES (8 GANG) 100K
RB1504	1-234-397-11	s	NETWORK, RES (8 GANG) 100K
RB1505	1-234-397-11	s	NETWORK, RES (8 GANG) 100K
RB1506	1-234-397-11	s	NETWORK, RES (8 GANG) 100K
RB1507	1-234-397-11	s	NETWORK, RES (8 GANG) 100K
RB1508	1-234-397-11	s	NETWORK, RES (8 GANG) 100K
RB1509	1-234-397-11	s	NETWORK, RES (8 GANG) 100K
RV1	1-237-031-11	s	RESISTOR,ADJ,CERMET 200
RV2	1-237-031-11	s	RESISTOR,ADJ,CERMET 200
THP100	1-809-357-21	s	THERMISTOR
X300	1-767-696-11	s	OSCILLATOR, CRYSTAL
X301	1-767-618-11	s	OSCILLATOR, CRYSTAL
X302	1-767-695-11	s	OSCILLATOR, CRYSTAL
X900	1-767-618-11	s	OSCILLATOR, CRYSTAL
X901	1-767-696-11	s	OSCILLATOR, CRYSTAL
X1203	1-767-695-11	s	OSCILLATOR, CRYSTAL
X1204	1-767-617-11	s	OSCILLATOR, CRYSTAL
X1205	1-767-619-11	s	OSCILLATOR, CRYSTAL

VPR-64 BOARD [SUFFIX 17-] for MSW RECORDER

[Lot No. 421 -] MSW-2000, M2000/P, A2000/P
[Lot No. 495 -] MSW-M2000E/P

Ref. No. or Q'ty	Part No.	SP	Description
1pc	A-8324-882-D	s	MOUNTED CIRCUIT BOARD, VPR-64
C100	1-131-992-11	s	CAP, CERAMIC 100000PF F 1608
C101	1-131-992-11	s	CAP, CERAMIC 100000PF F 1608
C102	1-131-992-11	s	CAP, CERAMIC 100000PF F 1608
C103	1-131-992-11	s	CAP, CERAMIC 100000PF F 1608
C104	1-131-999-11	s	CAPACITOR,SOLID ELECT 150MF
C105	1-131-999-11	s	CAPACITOR,SOLID ELECT 150MF
C106	1-131-992-11	s	CAP, CERAMIC 100000PF F 1608
C107	1-131-992-11	s	CAP, CERAMIC 100000PF F 1608
C108	1-162-970-11	s	CAPACITOR CERAMIC 0.01MF/25V B
C109	1-162-921-11	s	CAPACITOR,CERAMIC 33PF/50V CH
C112	1-164-230-11	s	CAPACITOR,CERAMIC 220PF/50V
C113	1-131-992-11	s	CAP, CERAMIC 100000PF F 1608
C114	1-131-992-11	s	CAP, CERAMIC 100000PF F 1608
C119	1-131-992-11	s	CAP, CERAMIC 100000PF F 1608
C120	1-131-992-11	s	CAP, CERAMIC 100000PF F 1608
C121	1-131-992-11	s	CAP, CERAMIC 100000PF F 1608
C122	1-127-692-11	s	CAP, CHIP CERAMIC 10MF B 3216
C125	1-131-992-11	s	CAP, CERAMIC 100000PF F 1608
C127	1-131-992-11	s	CAP, CERAMIC 100000PF F 1608
C129	1-131-992-11	s	CAP, CERAMIC 100000PF F 1608
C130	1-131-992-11	s	CAP, CERAMIC 100000PF F 1608
C131	1-131-992-11	s	CAP, CERAMIC 100000PF F 1608
C132	1-131-992-11	s	CAP, CERAMIC 100000PF F 1608
C133	1-131-992-11	s	CAP, CERAMIC 100000PF F 1608
C134	1-127-573-11	s	CAPACITOR,CERAMIC 1MFB(2012)
C135	1-162-921-11	s	CAPACITOR,CERAMIC 33PF/50V CH
C136	1-131-992-11	s	CAP, CERAMIC 100000PF F 1608
C137	1-131-992-11	s	CAP, CERAMIC 100000PF F 1608
C138	1-164-230-11	s	CAPACITOR,CERAMIC 220PF/50V
C140	1-131-992-11	s	CAP, CERAMIC 100000PF F 1608
C141	1-131-992-11	s	CAP, CERAMIC 100000PF F 1608
C142	1-131-992-11	s	CAP, CERAMIC 100000PF F 1608
C143	1-131-992-11	s	CAP, CERAMIC 100000PF F 1608
C144	1-115-416-11	s	CAPACITOR,CERAMIC 1000PF/25V
C145	1-131-992-11	s	CAP, CERAMIC 100000PF F 1608
C146	1-164-315-11	s	CAPACITOR,CERAMIC 470PF/50V CH
C147	1-115-416-11	s	CAPACITOR,CERAMIC 1000PF/25V
C148	1-115-416-11	s	CAPACITOR,CERAMIC 1000PF/25V
C149	1-164-315-11	s	CAPACITOR,CERAMIC 470PF/50V CH
C150	1-131-992-11	s	CAP, CERAMIC 100000PF F 1608
C151	1-162-927-11	s	CAPACITOR,CERAMIC 100PF/50V CH
C152	1-162-927-11	s	CAPACITOR,CERAMIC 100PF/50V CH
C154	1-164-230-11	s	CAPACITOR,CERAMIC 220PF/50V
C155	1-164-230-11	s	CAPACITOR,CERAMIC 220PF/50V
C156	1-131-992-11	s	CAP, CERAMIC 100000PF F 1608
C158	1-131-992-11	s	CAP, CERAMIC 100000PF F 1608
C160	1-131-992-11	s	CAP, CERAMIC 100000PF F 1608
C161	1-131-992-11	s	CAP, CERAMIC 100000PF F 1608
C162	1-131-992-11	s	CAP, CERAMIC 100000PF F 1608
C166	1-131-992-11	s	CAP, CERAMIC 100000PF F 1608
C167	1-131-992-11	s	CAP, CERAMIC 100000PF F 1608
C168	1-131-992-11	s	CAP, CERAMIC 100000PF F 1608
C170	1-131-992-11	s	CAP, CERAMIC 100000PF F 1608
C171	1-131-992-11	s	CAP, CERAMIC 100000PF F 1608
C172	1-131-992-11	s	CAP, CERAMIC 100000PF F 1608

(VPR-64 BOARD [SUFFIX 17-] for MSW RECORDER)

Ref. No. or Q'ty	Part No.	SP	Description
C175	1-165-811-11	s	CAPACITOR CHIP CERAMIC 22MF B
C176	1-131-992-11	s	CAP, CERAMIC 100000PF F 1608
C177	1-131-992-11	s	CAP, CERAMIC 100000PF F 1608
C178	1-131-992-11	s	CAP, CERAMIC 100000PF F 1608
C179	1-131-992-11	s	CAP, CERAMIC 100000PF F 1608
C180	1-115-416-11	s	CAPACITOR,CERAMIC 1000PF/25V
C181	1-115-416-11	s	CAPACITOR,CERAMIC 1000PF/25V
C182	1-165-811-11	s	CAPACITOR CHIP CERAMIC 22MF B
C183	1-131-992-11	s	CAP, CERAMIC 100000PF F 1608
C185	1-162-970-11	s	CAPACITOR CERAMIC 0.01MF/25V B
C186	1-131-992-11	s	CAP, CERAMIC 100000PF F 1608
C187	1-131-992-11	s	CAP, CERAMIC 100000PF F 1608
C189	1-131-992-11	s	CAP, CERAMIC 100000PF F 1608
C191	1-127-692-11	s	CAP, CHIP CERAMIC 10MF B 3216
C192	1-119-662-11	s	CAPACITOR,CERAMIC 150PF (1608)
C193	1-165-811-11	s	CAPACITOR CHIP CERAMIC 22MF B
C195	1-165-811-11	s	CAPACITOR CHIP CERAMIC 22MF B
C196	1-131-992-11	s	CAP, CERAMIC 100000PF F 1608
C197	1-131-992-11	s	CAP, CERAMIC 100000PF F 1608
C198	1-131-992-11	s	CAP, CERAMIC 100000PF F 1608
C199	1-131-992-11	s	CAP, CERAMIC 100000PF F 1608
C201	1-131-992-11	s	CAP, CERAMIC 100000PF F 1608
C202	1-131-992-11	s	CAP, CERAMIC 100000PF F 1608
C203	1-131-992-11	s	CAP, CERAMIC 100000PF F 1608
C207	1-131-992-11	s	CAP, CERAMIC 100000PF F 1608
C208	1-131-992-11	s	CAP, CERAMIC 100000PF F 1608
C209	1-131-992-11	s	CAP, CERAMIC 100000PF F 1608
C210	1-131-992-11	s	CAP, CERAMIC 100000PF F 1608
C212	1-131-992-11	s	CAP, CERAMIC 100000PF F 1608
C213	1-131-992-11	s	CAP, CERAMIC 100000PF F 1608
C214	1-131-992-11	s	CAP, CERAMIC 100000PF F 1608
C215	1-131-992-11	s	CAP, CERAMIC 100000PF F 1608
C216	1-131-992-11	s	CAP, CERAMIC 100000PF F 1608
C217	1-131-992-11	s	CAP, CERAMIC 100000PF F 1608
C219	1-115-416-11	s	CAPACITOR,CERAMIC 1000PF/25V
C220	1-131-992-11	s	CAP, CERAMIC 100000PF F 1608
C222	1-127-692-11	s	CAP, CHIP CERAMIC 10MF B 3216
C223	1-131-992-11	s	CAP, CERAMIC 100000PF F 1608
C224	1-131-999-11	s	CAPACITOR,SOLID ELECT 150MF
C225	1-131-992-11	s	CAP, CERAMIC 100000PF F 1608
C226	1-131-992-11	s	CAP, CERAMIC 100000PF F 1608
C227	1-164-460-11	s	CAPACITOR, CERAMIC 62PF/50V
C228	1-164-238-11	s	CAPACITOR,CERAMIC 36PF/50V CH
C229	1-164-378-11	s	CAPACITOR CERAMIC 30PF/50V CH
C230	1-162-915-11	s	CAPACITOR,CERAMIC 10PF/50V CH
C231	1-164-460-11	s	CAPACITOR, CERAMIC 62PF/50V
C232	1-162-921-11	s	CAPACITOR,CERAMIC 33PF/50V CH
C233	1-164-460-11	s	CAPACITOR, CERAMIC 62PF/50V
C235	1-162-919-11	s	CAPACITOR,CERAMIC 22PF/50V CH
C236	1-162-908-11	s	CAPACITOR,CERAMIC 3PF/50V 1608
C302	1-128-590-11	s	CAPACITOR ELECT 100MF/6.3V(105
C303	1-131-992-11	s	CAP, CERAMIC 100000PF F 1608
C305	1-131-992-11	s	CAP, CERAMIC 100000PF F 1608
C307	1-131-992-11	s	CAP, CERAMIC 100000PF F 1608
C309	1-131-992-11	s	CAP, CERAMIC 100000PF F 1608
C311	1-131-992-11	s	CAP, CERAMIC 100000PF F 1608
C313	1-131-992-11	s	CAP, CERAMIC 100000PF F 1608
C314	1-131-992-11	s	CAP, CERAMIC 100000PF F 1608
C315	1-131-992-11	s	CAP, CERAMIC 100000PF F 1608

(VPR-64 BOARD [SUFFIX 17-] for MSW RECORDER)

Ref. No. or Q'ty	Part No.	SP	Description
C316	1-127-715-11	s	CAPACITOR,CERAMIC 0.22MF B1608
C317	1-131-992-11	s	CAP, CERAMIC 100000PF F 1608
C318	1-131-992-11	s	CAP, CERAMIC 100000PF F 1608
C320	1-131-992-11	s	CAP, CERAMIC 100000PF F 1608
C321	1-131-992-11	s	CAP, CERAMIC 100000PF F 1608
C322	1-162-970-11	s	CAPACITOR CERAMIC 0.01MF/25V B
C325	1-131-992-11	s	CAP, CERAMIC 100000PF F 1608
C326	1-131-992-11	s	CAP, CERAMIC 100000PF F 1608
C327	1-131-992-11	s	CAP, CERAMIC 100000PF F 1608
C328	1-131-992-11	s	CAP, CERAMIC 100000PF F 1608
C330	1-131-992-11	s	CAP, CERAMIC 100000PF F 1608
C333	1-131-992-11	s	CAP, CERAMIC 100000PF F 1608
C335	1-127-760-11	s	CAPACITOR,CERAMIC 4.7MF/6.3V
C336	1-131-992-11	s	CAP, CERAMIC 100000PF F 1608
C338	1-128-590-11	s	CAPACITOR ELECT 100MF/6.3V(105
C339	1-125-837-91	s	CAPACITOR,CHIP CERAMIC1MF/6.3V
C340	1-125-837-91	s	CAPACITOR,CHIP CERAMIC1MF/6.3V
C341	1-125-837-91	s	CAPACITOR,CHIP CERAMIC1MF/6.3V
C342	1-131-992-11	s	CAP, CERAMIC 100000PF F 1608
C344	1-131-992-11	s	CAP, CERAMIC 100000PF F 1608
C346	1-131-992-11	s	CAP, CERAMIC 100000PF F 1608
C348	1-131-992-11	s	CAP, CERAMIC 100000PF F 1608
C350	1-131-992-11	s	CAP, CERAMIC 100000PF F 1608
C352	1-131-992-11	s	CAP, CERAMIC 100000PF F 1608
C356	1-131-992-11	s	CAP, CERAMIC 100000PF F 1608
C358	1-162-927-11	s	CAPACITOR,CERAMIC 100PF/50V CH
C359	1-131-992-11	s	CAP, CERAMIC 100000PF F 1608
C360	1-125-889-11	s	CAPACITOR, CERAMIC 2.2MF
C362	1-131-992-11	s	CAP, CERAMIC 100000PF F 1608
C364	1-131-992-11	s	CAP, CERAMIC 100000PF F 1608
C365	1-125-889-11	s	CAPACITOR, CERAMIC 2.2MF
C366	1-107-826-11	s	CAPACITOR,CHIP CERAMIC 0.1MF
C367	1-162-927-11	s	CAPACITOR,CERAMIC 100PF/50V CH
C503	1-131-992-11	s	CAP, CERAMIC 100000PF F 1608
C504	1-131-992-11	s	CAP, CERAMIC 100000PF F 1608
C506	1-131-992-11	s	CAP, CERAMIC 100000PF F 1608
C507	1-164-813-11	s	CAPACITOR,CERAMIC 15PF/50V CH
C509	1-162-926-11	s	CAPACITOR,CERAMIC 82PF/50V CH
C510	1-131-992-11	s	CAP, CERAMIC 100000PF F 1608
C511	1-131-992-11	s	CAP, CERAMIC 100000PF F 1608
C512	1-131-992-11	s	CAP, CERAMIC 100000PF F 1608
C513	1-131-992-11	s	CAP, CERAMIC 100000PF F 1608
C514	1-131-992-11	s	CAP, CERAMIC 100000PF F 1608
C515	1-131-992-11	s	CAP, CERAMIC 100000PF F 1608
C516	1-131-992-11	s	CAP, CERAMIC 100000PF F 1608
C517	1-164-315-11	s	CAPACITOR,CERAMIC 470PF/50V CH
C518	1-162-926-11	s	CAPACITOR,CERAMIC 82PF/50V CH
C519	1-162-928-11	s	CAPACITOR,CERAMIC 120PF/50V CH
C520	1-162-923-11	s	CAPACITOR,CERAMIC 47PF/50V CH
C521	1-162-923-11	s	CAPACITOR,CERAMIC 47PF/50V CH
C522	1-164-230-11	s	CAPACITOR,CERAMIC 220PF/50V
C523	1-164-230-11	s	CAPACITOR,CERAMIC 220PF/50V
C524	1-162-926-11	s	CAPACITOR,CERAMIC 82PF/50V CH
C528	1-162-970-11	s	CAPACITOR CERAMIC 0.01MF/25V B
C537	1-127-954-11	s	CAPACITOR,CHIP FILM 0.047MF
C538	1-131-992-11	s	CAP, CERAMIC 100000PF F 1608
C539	1-131-992-11	s	CAP, CERAMIC 100000PF F 1608
C540	1-131-992-11	s	CAP, CERAMIC 100000PF F 1608
C541	1-107-826-11	s	CAPACITOR,CHIP CERAMIC 0.1MF

(VPR-64 BOARD [SUFFIX 17-] for MSW RECORDER)

Ref. No. or Q'ty	Part No.	SP	Description
C542	1-107-826-11	s	CAPACITOR,CHIP CERAMIC 0.1MF
C543	1-107-826-11	s	CAPACITOR,CHIP CERAMIC 0.1MF
C544	1-131-992-11	s	CAP, CERAMIC 100000PF F 1608
C545	1-131-992-11	s	CAP, CERAMIC 100000PF F 1608
C546	1-127-715-11	s	CAPACITOR,CERAMIC 0.22MF B1608
C547	1-127-715-11	s	CAPACITOR,CERAMIC 0.22MF B1608
C548	1-127-715-11	s	CAPACITOR,CERAMIC 0.22MF B1608
C549	1-131-992-11	s	CAP, CERAMIC 100000PF F 1608
C550	1-162-928-11	s	CAPACITOR,CERAMIC 120PF/50V CH
C551	1-131-992-11	s	CAP, CERAMIC 100000PF F 1608
C552	1-131-992-11	s	CAP, CERAMIC 100000PF F 1608
C553	1-131-992-11	s	CAP, CERAMIC 100000PF F 1608
C554	1-131-992-11	s	CAP, CERAMIC 100000PF F 1608
C555	1-131-992-11	s	CAP, CERAMIC 100000PF F 1608
C556	1-131-992-11	s	CAP, CERAMIC 100000PF F 1608
C557	1-131-992-11	s	CAP, CERAMIC 100000PF F 1608
C558	1-127-692-11	s	CAP, CHIP CERAMIC 10MF B 3216
C559	1-127-692-11	s	CAP, CHIP CERAMIC 10MF B 3216
C560	1-127-692-11	s	CAP, CHIP CERAMIC 10MF B 3216
C562	1-131-992-11	s	CAP, CERAMIC 100000PF F 1608
C564	1-128-451-11	s	CAPACITOR ELECT 22MF/16V(105C)
C565	1-131-992-11	s	CAP, CERAMIC 100000PF F 1608
C566	1-131-992-11	s	CAP, CERAMIC 100000PF F 1608
C567	1-131-992-11	s	CAP, CERAMIC 100000PF F 1608
C568	1-131-992-11	s	CAP, CERAMIC 100000PF F 1608
C569	1-162-927-11	s	CAPACITOR,CERAMIC 100PF/50V CH
C570	1-162-927-11	s	CAPACITOR,CERAMIC 100PF/50V CH
C573	1-162-970-11	s	CAPACITOR CERAMIC 0.01MF/25V B
C576	1-162-970-11	s	CAPACITOR CERAMIC 0.01MF/25V B
C577	1-165-811-11	s	CAPACITOR CHIP CERAMIC 22MF B
C578	1-165-811-11	s	CAPACITOR CHIP CERAMIC 22MF B
C579	1-165-811-11	s	CAPACITOR CHIP CERAMIC 22MF B
C580	1-165-811-11	s	CAPACITOR CHIP CERAMIC 22MF B
C581	1-162-923-11	s	CAPACITOR,CERAMIC 47PF/50V CH
C582	1-162-923-11	s	CAPACITOR,CERAMIC 47PF/50V CH
C583	1-131-992-11	s	CAP, CERAMIC 100000PF F 1608
C584	1-131-992-11	s	CAP, CERAMIC 100000PF F 1608
C585	1-131-992-11	s	CAP, CERAMIC 100000PF F 1608
C586	1-131-992-11	s	CAP, CERAMIC 100000PF F 1608
C589	1-128-451-11	s	CAPACITOR ELECT 22MF/16V(105C)
C590	1-131-992-11	s	CAP, CERAMIC 100000PF F 1608
C593	1-165-811-11	s	CAPACITOR CHIP CERAMIC 22MF B
C594	1-165-811-11	s	CAPACITOR CHIP CERAMIC 22MF B
C595	1-131-992-11	s	CAP, CERAMIC 100000PF F 1608
C596	1-131-992-11	s	CAP, CERAMIC 100000PF F 1608
C597	1-162-923-11	s	CAPACITOR,CERAMIC 47PF/50V CH
C598	1-131-992-11	s	CAP, CERAMIC 100000PF F 1608
C599	1-131-992-11	s	CAP, CERAMIC 100000PF F 1608
C600	1-131-992-11	s	CAP, CERAMIC 100000PF F 1608
C601	1-131-992-11	s	CAP, CERAMIC 100000PF F 1608
C602	1-131-992-11	s	CAP, CERAMIC 100000PF F 1608
C603	1-131-999-11	s	CAPACITOR,SOLID ELECT 150MF
C604	1-131-992-11	s	CAP, CERAMIC 100000PF F 1608
C605	1-131-992-11	s	CAP, CERAMIC 100000PF F 1608
C606	1-131-999-11	s	CAPACITOR,SOLID ELECT 150MF
C609	1-137-894-21	s	CAPACITOR,ELECT(CIHP TYPE) 470
C610	1-131-992-11	s	CAP, CERAMIC 100000PF F 1608
C611	1-131-992-11	s	CAP, CERAMIC 100000PF F 1608
C612	1-131-992-11	s	CAP, CERAMIC 100000PF F 1608

(VPR-64 BOARD [SUFFIX 17-] for MSW RECORDER)

Ref. No. or Q'ty	Part No.	SP	Description
C613	1-131-992-11	s	CAP, CERAMIC 100000PF F 1608
C614	1-131-992-11	s	CAP, CERAMIC 100000PF F 1608
C700	1-131-992-11	s	CAP, CERAMIC 100000PF F 1608
C701	1-131-992-11	s	CAP, CERAMIC 100000PF F 1608
C702	1-131-992-11	s	CAP, CERAMIC 100000PF F 1608
C703	1-131-992-11	s	CAP, CERAMIC 100000PF F 1608
C704	1-131-992-11	s	CAP, CERAMIC 100000PF F 1608
C714	1-131-992-11	s	CAP, CERAMIC 100000PF F 1608
C715	1-131-992-11	s	CAP, CERAMIC 100000PF F 1608
C716	1-131-992-11	s	CAP, CERAMIC 100000PF F 1608
C717	1-131-992-11	s	CAP, CERAMIC 100000PF F 1608
C718	1-131-992-11	s	CAP, CERAMIC 100000PF F 1608
C719	1-131-992-11	s	CAP, CERAMIC 100000PF F 1608
C720	1-131-992-11	s	CAP, CERAMIC 100000PF F 1608
C721	1-131-992-11	s	CAP, CERAMIC 100000PF F 1608
C722	1-131-992-11	s	CAP, CERAMIC 100000PF F 1608
C723	1-131-992-11	s	CAP, CERAMIC 100000PF F 1608
C724	1-131-992-11	s	CAP, CERAMIC 100000PF F 1608
C725	1-131-992-11	s	CAP, CERAMIC 100000PF F 1608
C726	1-131-992-11	s	CAP, CERAMIC 100000PF F 1608
C727	1-131-992-11	s	CAP, CERAMIC 100000PF F 1608
C728	1-131-992-11	s	CAP, CERAMIC 100000PF F 1608
C729	1-131-992-11	s	CAP, CERAMIC 100000PF F 1608
C730	1-131-992-11	s	CAP, CERAMIC 100000PF F 1608
C731	1-131-992-11	s	CAP, CERAMIC 100000PF F 1608
C732	1-131-992-11	s	CAP, CERAMIC 100000PF F 1608
C733	1-131-992-11	s	CAP, CERAMIC 100000PF F 1608
C734	1-131-992-11	s	CAP, CERAMIC 100000PF F 1608
C735	1-131-992-11	s	CAP, CERAMIC 100000PF F 1608
C736	1-127-760-11	s	CAPACITOR,CERAMIC 4.7MF/6.3V
C739	1-128-590-11	s	CAPACITOR ELECT 100MF/6.3V(105
C751	1-131-992-11	s	CAP, CERAMIC 100000PF F 1608
C752	1-131-992-11	s	CAP, CERAMIC 100000PF F 1608
C753	1-131-992-11	s	CAP, CERAMIC 100000PF F 1608
C754	1-131-992-11	s	CAP, CERAMIC 100000PF F 1608
C755	1-131-992-11	s	CAP, CERAMIC 100000PF F 1608
C756	1-131-992-11	s	CAP, CERAMIC 100000PF F 1608
C790	1-131-992-11	s	CAP, CERAMIC 100000PF F 1608
C791	1-131-992-11	s	CAP, CERAMIC 100000PF F 1608
C792	1-131-992-11	s	CAP, CERAMIC 100000PF F 1608
C793	1-131-992-11	s	CAP, CERAMIC 100000PF F 1608
C794	1-131-992-11	s	CAP, CERAMIC 100000PF F 1608
C795	1-131-992-11	s	CAP, CERAMIC 100000PF F 1608
C796	1-131-992-11	s	CAP, CERAMIC 100000PF F 1608
C797	1-131-992-11	s	CAP, CERAMIC 100000PF F 1608
C800	1-131-992-11	s	CAP, CERAMIC 100000PF F 1608
C801	1-131-992-11	s	CAP, CERAMIC 100000PF F 1608
C802	1-131-992-11	s	CAP, CERAMIC 100000PF F 1608
C803	1-131-992-11	s	CAP, CERAMIC 100000PF F 1608
C804	1-131-992-11	s	CAP, CERAMIC 100000PF F 1608
C805	1-131-992-11	s	CAP, CERAMIC 100000PF F 1608
C806	1-131-992-11	s	CAP, CERAMIC 100000PF F 1608
C807	1-131-992-11	s	CAP, CERAMIC 100000PF F 1608
C808	1-131-992-11	s	CAP, CERAMIC 100000PF F 1608
C809	1-131-992-11	s	CAP, CERAMIC 100000PF F 1608
C810	1-131-992-11	s	CAP, CERAMIC 100000PF F 1608
C811	1-131-992-11	s	CAP, CERAMIC 100000PF F 1608
C812	1-131-992-11	s	CAP, CERAMIC 100000PF F 1608
C813	1-131-992-11	s	CAP, CERAMIC 100000PF F 1608

(VPR-64 BOARD [SUFFIX 17-] for MSW RECORDER)

Ref. No. or Q'ty	Part No.	SP	Description
C814	1-131-992-11	s	CAP, CERAMIC 100000PF F 1608
C815	1-131-992-11	s	CAP, CERAMIC 100000PF F 1608
C816	1-131-992-11	s	CAP, CERAMIC 100000PF F 1608
C817	1-131-992-11	s	CAP, CERAMIC 100000PF F 1608
C818	1-131-992-11	s	CAP, CERAMIC 100000PF F 1608
C819	1-131-992-11	s	CAP, CERAMIC 100000PF F 1608
C820	1-131-992-11	s	CAP, CERAMIC 100000PF F 1608
C821	1-131-992-11	s	CAP, CERAMIC 100000PF F 1608
C822	1-131-992-11	s	CAP, CERAMIC 100000PF F 1608
C823	1-131-992-11	s	CAP, CERAMIC 100000PF F 1608
C824	1-131-992-11	s	CAP, CERAMIC 100000PF F 1608
C825	1-131-992-11	s	CAP, CERAMIC 100000PF F 1608
C826	1-131-992-11	s	CAP, CERAMIC 100000PF F 1608
C827	1-131-992-11	s	CAP, CERAMIC 100000PF F 1608
C828	1-131-992-11	s	CAP, CERAMIC 100000PF F 1608
C829	1-131-992-11	s	CAP, CERAMIC 100000PF F 1608
C838	1-131-992-11	s	CAP, CERAMIC 100000PF F 1608
C839	1-131-992-11	s	CAP, CERAMIC 100000PF F 1608
C840	1-131-992-11	s	CAP, CERAMIC 100000PF F 1608
C849	1-131-992-11	s	CAP, CERAMIC 100000PF F 1608
C850	1-131-992-11	s	CAP, CERAMIC 100000PF F 1608
C851	1-131-992-11	s	CAP, CERAMIC 100000PF F 1608
C852	1-131-992-11	s	CAP, CERAMIC 100000PF F 1608
C853	1-131-992-11	s	CAP, CERAMIC 100000PF F 1608
C854	1-131-992-11	s	CAP, CERAMIC 100000PF F 1608
C855	1-131-992-11	s	CAP, CERAMIC 100000PF F 1608
C856	1-131-992-11	s	CAP, CERAMIC 100000PF F 1608
C857	1-131-992-11	s	CAP, CERAMIC 100000PF F 1608
C858	1-131-992-11	s	CAP, CERAMIC 100000PF F 1608
C859	1-131-992-11	s	CAP, CERAMIC 100000PF F 1608
C860	1-131-992-11	s	CAP, CERAMIC 100000PF F 1608
C901	1-127-760-11	s	CAPACITOR,CERAMIC 4.7MF/6.3V
C904	1-128-590-11	s	CAPACITOR ELECT 100MF/6.3V(105
C905	1-128-590-11	s	CAPACITOR ELECT 100MF/6.3V(105
C907	1-131-992-11	s	CAP, CERAMIC 100000PF F 1608
C908	1-131-992-11	s	CAP, CERAMIC 100000PF F 1608
C911	1-131-992-11	s	CAP, CERAMIC 100000PF F 1608
C912	1-131-992-11	s	CAP, CERAMIC 100000PF F 1608
C915	1-131-992-11	s	CAP, CERAMIC 100000PF F 1608
C916	1-131-992-11	s	CAP, CERAMIC 100000PF F 1608
C917	1-131-992-11	s	CAP, CERAMIC 100000PF F 1608
C918	1-131-992-11	s	CAP, CERAMIC 100000PF F 1608
C919	1-131-992-11	s	CAP, CERAMIC 100000PF F 1608
C921	1-131-992-11	s	CAP, CERAMIC 100000PF F 1608
C923	1-131-992-11	s	CAP, CERAMIC 100000PF F 1608
C924	1-131-992-11	s	CAP, CERAMIC 100000PF F 1608
C925	1-131-992-11	s	CAP, CERAMIC 100000PF F 1608
C926	1-131-992-11	s	CAP, CERAMIC 100000PF F 1608
C927	1-131-992-11	s	CAP, CERAMIC 100000PF F 1608
C928	1-131-992-11	s	CAP, CERAMIC 100000PF F 1608
C929	1-165-811-11	s	CAPACITOR CHIP CERAMIC 22MF B
C930	1-131-992-11	s	CAP, CERAMIC 100000PF F 1608
C931	1-131-992-11	s	CAP, CERAMIC 100000PF F 1608
C932	1-128-590-11	s	CAPACITOR ELECT 100MF/6.3V(105
C935	1-131-992-11	s	CAP, CERAMIC 100000PF F 1608
C937	1-127-760-11	s	CAPACITOR,CERAMIC 4.7MF/6.3V
C938	1-131-992-11	s	CAP, CERAMIC 100000PF F 1608
C940	1-131-992-11	s	CAP, CERAMIC 100000PF F 1608
C942	1-131-992-11	s	CAP, CERAMIC 100000PF F 1608

(VPR-64 BOARD [SUFFIX 17-] for MSW RECORDER)

Ref. No. or Q'ty	Part No.	SP	Description
C944	1-131-992-11	s	CAP, CERAMIC 100000PF F 1608
C945	1-131-992-11	s	CAP, CERAMIC 100000PF F 1608
C947	1-128-451-11	s	CAPACITOR ELECT 22MF/16V(105C)
C948	1-131-992-11	s	CAP, CERAMIC 100000PF F 1608
C950	1-127-760-11	s	CAPACITOR,CERAMIC 4.7MF/6.3V
C952	1-131-992-11	s	CAP, CERAMIC 100000PF F 1608
C955	1-131-992-11	s	CAP, CERAMIC 100000PF F 1608
C956	1-131-992-11	s	CAP, CERAMIC 100000PF F 1608
C959	1-128-590-11	s	CAPACITOR ELECT 100MF/6.3V(105
C960	1-131-992-11	s	CAP, CERAMIC 100000PF F 1608
C961	1-131-992-11	s	CAP, CERAMIC 100000PF F 1608
C962	1-131-992-11	s	CAP, CERAMIC 100000PF F 1608
C963	1-131-992-11	s	CAP, CERAMIC 100000PF F 1608
C964	1-131-992-11	s	CAP, CERAMIC 100000PF F 1608
C968	1-131-992-11	s	CAP, CERAMIC 100000PF F 1608
C969	1-131-992-11	s	CAP, CERAMIC 100000PF F 1608
C970	1-131-992-11	s	CAP, CERAMIC 100000PF F 1608
C971	1-131-992-11	s	CAP, CERAMIC 100000PF F 1608
C972	1-131-992-11	s	CAP, CERAMIC 100000PF F 1608
C973	1-128-590-11	s	CAPACITOR ELECT 100MF/6.3V(105
C974	1-128-590-11	s	CAPACITOR ELECT 100MF/6.3V(105
C975	1-128-590-11	s	CAPACITOR ELECT 100MF/6.3V(105
C976	1-131-992-11	s	CAP, CERAMIC 100000PF F 1608
C977	1-131-992-11	s	CAP, CERAMIC 100000PF F 1608
C978	1-131-992-11	s	CAP, CERAMIC 100000PF F 1608
C979	1-162-965-11	s	CAPACITOR,CERAMIC 1500PF/50V B
C980	1-162-965-11	s	CAPACITOR,CERAMIC 1500PF/50V B
C981	1-162-914-11	s	CAPACITOR,CERAMIC 9PF/50V 1608
C982	1-162-914-11	s	CAPACITOR,CERAMIC 9PF/50V 1608
C983	1-162-965-11	s	CAPACITOR,CERAMIC 1500PF/50V B
C984	1-164-218-11	s	CAPACITOR,CERAMIC 180PF/50V CH
C985	1-162-965-11	s	CAPACITOR,CERAMIC 1500PF/50V B
C986	1-164-218-11	s	CAPACITOR,CERAMIC 180PF/50V CH
C987	1-162-908-11	s	CAPACITOR,CERAMIC 3PF/50V 1608
C988	1-162-908-11	s	CAPACITOR,CERAMIC 3PF/50V 1608
C989	1-162-908-11	s	CAPACITOR,CERAMIC 3PF/50V 1608
C990	1-162-909-11	s	CAPACITOR,CERAMIC 4PF/50V CH
C991	1-131-992-11	s	CAP, CERAMIC 100000PF F 1608
C992	1-162-910-11	s	CAPACITOR,CERAMIC 5PF/50V 1608
C996	1-131-992-11	s	CAP, CERAMIC 100000PF F 1608
C997	1-131-992-11	s	CAP, CERAMIC 100000PF F 1608
C998	1-131-992-11	s	CAP, CERAMIC 100000PF F 1608
C999	1-131-992-11	s	CAP, CERAMIC 100000PF F 1608
C1000	1-131-992-11	s	CAP, CERAMIC 100000PF F 1608
C1001	1-131-992-11	s	CAP, CERAMIC 100000PF F 1608
C1002	1-131-992-11	s	CAP, CERAMIC 100000PF F 1608
C1003	1-131-992-11	s	CAP, CERAMIC 100000PF F 1608
C1004	1-162-923-11	s	CAPACITOR,CERAMIC 47PF/50V CH
C1005	1-125-889-11	s	CAPACITOR, CERAMIC 2.2MF
C1006	1-125-889-11	s	CAPACITOR, CERAMIC 2.2MF
C1007	1-125-889-11	s	CAPACITOR, CERAMIC 2.2MF
C1008	1-125-889-11	s	CAPACITOR, CERAMIC 2.2MF
C1014	1-162-927-11	s	CAPACITOR,CERAMIC 100PF/50V CH
C1015	1-127-573-11	s	CAPACITOR,CERAMIC 1MFB(2012)
C1016	1-127-573-11	s	CAPACITOR,CERAMIC 1MFB(2012)
C1017	1-127-573-11	s	CAPACITOR,CERAMIC 1MFB(2012)
C1018	1-127-573-11	s	CAPACITOR,CERAMIC 1MFB(2012)
C1019	1-162-910-11	s	CAPACITOR,CERAMIC 5PF/50V 1608
C1028	1-162-923-11	s	CAPACITOR,CERAMIC 47PF/50V CH

(VPR-64 BOARD [SUFFIX 17-] for MSW RECORDER)

Ref. No. or Q'ty	Part No.	SP	Description
C1037	1-162-915-11	s	CAPACITOR,CERAMIC 10PF/50V CH
C1038	1-162-910-11	s	CAPACITOR,CERAMIC 5PF/50V 1608
C1039	1-131-992-11	s	CAP, CERAMIC 100000PF F 1608
C1040	1-131-992-11	s	CAP, CERAMIC 100000PF F 1608
C1041	1-162-910-11	s	CAPACITOR,CERAMIC 5PF/50V 1608
C1045	1-131-992-11	s	CAP, CERAMIC 100000PF F 1608
C1046	1-131-992-11	s	CAP, CERAMIC 100000PF F 1608
C1047	1-131-992-11	s	CAP, CERAMIC 100000PF F 1608
C1048	1-131-992-11	s	CAP, CERAMIC 100000PF F 1608
C1049	1-131-992-11	s	CAP, CERAMIC 100000PF F 1608
C1050	1-131-992-11	s	CAP, CERAMIC 100000PF F 1608
C1052	1-162-910-11	s	CAPACITOR,CERAMIC 5PF/50V 1608
C1053	1-162-910-11	s	CAPACITOR,CERAMIC 5PF/50V 1608
C1054	1-131-992-11	s	CAP, CERAMIC 100000PF F 1608
C1055	1-131-992-11	s	CAP, CERAMIC 100000PF F 1608
C1056	1-131-992-11	s	CAP, CERAMIC 100000PF F 1608
C1057	1-131-992-11	s	CAP, CERAMIC 100000PF F 1608
C1060	1-131-992-11	s	CAP, CERAMIC 100000PF F 1608
C1061	1-131-992-11	s	CAP, CERAMIC 100000PF F 1608
C1062	1-131-992-11	s	CAP, CERAMIC 100000PF F 1608
C1063	1-131-992-11	s	CAP, CERAMIC 100000PF F 1608
C1064	1-128-590-11	s	CAPACITOR ELECT 100MF/6.3V(105
C1065	1-128-590-11	s	CAPACITOR ELECT 100MF/6.3V(105
C1066	1-107-826-11	s	CAPACITOR,CHIP CERAMIC 0.1MF
C1067	1-107-826-11	s	CAPACITOR,CHIP CERAMIC 0.1MF
C1068	1-107-826-11	s	CAPACITOR,CHIP CERAMIC 0.1MF
C1069	1-162-923-11	s	CAPACITOR,CERAMIC 47PF/50V CH
C1070	1-135-341-11	s	CAPACITOR,SOLID ELECT 330MF
C1071	1-131-992-11	s	CAP, CERAMIC 100000PF F 1608
C1072	1-131-992-11	s	CAP, CERAMIC 100000PF F 1608
C1100	1-131-992-11	s	CAP, CERAMIC 100000PF F 1608
C1102	1-128-590-11	s	CAPACITOR ELECT 100MF/6.3V(105
C1103	1-128-590-11	s	CAPACITOR ELECT 100MF/6.3V(105
C1104	1-131-992-11	s	CAP, CERAMIC 100000PF F 1608
C1105	1-131-992-11	s	CAP, CERAMIC 100000PF F 1608
C1106	1-131-992-11	s	CAP, CERAMIC 100000PF F 1608
C1107	1-131-992-11	s	CAP, CERAMIC 100000PF F 1608
C1108	1-162-921-11	s	CAPACITOR,CERAMIC 33PF/50V CH
C1109	1-164-230-11	s	CAPACITOR,CERAMIC 220PF/50V
C1110	1-131-992-11	s	CAP, CERAMIC 100000PF F 1608
C1111	1-131-992-11	s	CAP, CERAMIC 100000PF F 1608
C1112	1-164-315-11	s	CAPACITOR,CERAMIC 470PF/50V CH
C1113	1-164-230-11	s	CAPACITOR,CERAMIC 220PF/50V
C1114	1-164-315-11	s	CAPACITOR,CERAMIC 470PF/50V CH
C1115	1-164-230-11	s	CAPACITOR,CERAMIC 220PF/50V
C1116	1-131-992-11	s	CAP, CERAMIC 100000PF F 1608
C1117	1-131-992-11	s	CAP, CERAMIC 100000PF F 1608
C1118	1-162-970-11	s	CAPACITOR CERAMIC 0.01MF/25V B
C1120	1-131-992-11	s	CAP, CERAMIC 100000PF F 1608
C1122	1-127-954-11	s	CAPACITOR,CHIP FILM 0.047MF
C1123	1-131-992-11	s	CAP, CERAMIC 100000PF F 1608
C1124	1-131-992-11	s	CAP, CERAMIC 100000PF F 1608
C1125	1-131-992-11	s	CAP, CERAMIC 100000PF F 1608
C1126	1-131-992-11	s	CAP, CERAMIC 100000PF F 1608
C1127	1-131-992-11	s	CAP, CERAMIC 100000PF F 1608
C1128	1-162-911-11	s	CAPACITOR,CERAMIC 6PF/50V 1608
C1129	1-162-907-11	s	CAPACITOR,CERAMIC 2PF/50V(CK)
C1130	1-162-921-11	s	CAPACITOR,CERAMIC 33PF/50V CH
C1131	1-162-921-11	s	CAPACITOR,CERAMIC 33PF/50V CH

(VPR-64 BOARD [SUFFIX 17-] for MSW RECORDER)

Ref. No. or Q'ty	Part No.	SP	Description
C1134	1-131-992-11	s	CAP, CERAMIC 100000PF F 1608
C1135	1-131-992-11	s	CAP, CERAMIC 100000PF F 1608
C1136	1-131-992-11	s	CAP, CERAMIC 100000PF F 1608
C1137	1-131-992-11	s	CAP, CERAMIC 100000PF F 1608
C1141	1-131-992-11	s	CAP, CERAMIC 100000PF F 1608
C1142	1-131-992-11	s	CAP, CERAMIC 100000PF F 1608
C1143	1-131-992-11	s	CAP, CERAMIC 100000PF F 1608
C1144	1-131-992-11	s	CAP, CERAMIC 100000PF F 1608
C1145	1-131-992-11	s	CAP, CERAMIC 100000PF F 1608
C1146	1-131-992-11	s	CAP, CERAMIC 100000PF F 1608
C1147	1-131-992-11	s	CAP, CERAMIC 100000PF F 1608
C1148	1-131-992-11	s	CAP, CERAMIC 100000PF F 1608
C1149	1-131-992-11	s	CAP, CERAMIC 100000PF F 1608
C1150	1-131-992-11	s	CAP, CERAMIC 100000PF F 1608
C1151	1-131-992-11	s	CAP, CERAMIC 100000PF F 1608
C1152	1-131-992-11	s	CAP, CERAMIC 100000PF F 1608
C1153	1-107-826-11	s	CAPACITOR,CHIP CERAMIC 0.1MF
C1154	1-107-826-11	s	CAPACITOR,CHIP CERAMIC 0.1MF
C1200	1-131-992-11	s	CAP, CERAMIC 100000PF F 1608
C1203	1-162-925-11	s	CAPACITOR,CERAMIC 68PF/50V CH
C1204	1-164-230-11	s	CAPACITOR,CERAMIC 220PF/50V
C1205	1-162-925-11	s	CAPACITOR,CERAMIC 68PF/50V CH
C1206	1-131-992-11	s	CAP, CERAMIC 100000PF F 1608
C1208	1-131-992-11	s	CAP, CERAMIC 100000PF F 1608
C1209	1-131-992-11	s	CAP, CERAMIC 100000PF F 1608
C1210	1-131-992-11	s	CAP, CERAMIC 100000PF F 1608
C1211	1-131-992-11	s	CAP, CERAMIC 100000PF F 1608
C1213	1-131-992-11	s	CAP, CERAMIC 100000PF F 1608
C1214	1-131-992-11	s	CAP, CERAMIC 100000PF F 1608
C1215	1-162-970-11	s	CAPACITOR CERAMIC 0.01MF/25V B
C1216	1-131-992-11	s	CAP, CERAMIC 100000PF F 1608
C1217	1-131-992-11	s	CAP, CERAMIC 100000PF F 1608
C1218	1-162-919-11	s	CAPACITOR,CERAMIC 22PF/50V CH
C1220	1-131-992-11	s	CAP, CERAMIC 100000PF F 1608
C1221	1-131-992-11	s	CAP, CERAMIC 100000PF F 1608
C1222	1-131-992-11	s	CAP, CERAMIC 100000PF F 1608
C1223	1-162-925-11	s	CAPACITOR,CERAMIC 68PF/50V CH
C1224	1-125-889-11	s	CAPACITOR, CERAMIC 2.2MF
C1225	1-164-230-11	s	CAPACITOR,CERAMIC 220PF/50V
C1227	1-162-925-11	s	CAPACITOR,CERAMIC 68PF/50V CH
C1228	1-162-925-11	s	CAPACITOR,CERAMIC 68PF/50V CH
C1229	1-131-992-11	s	CAP, CERAMIC 100000PF F 1608
C1231	1-131-992-11	s	CAP, CERAMIC 100000PF F 1608
C1232	1-131-992-11	s	CAP, CERAMIC 100000PF F 1608
C1233	1-131-992-11	s	CAP, CERAMIC 100000PF F 1608
C1234	1-131-992-11	s	CAP, CERAMIC 100000PF F 1608
C1235	1-131-992-11	s	CAP, CERAMIC 100000PF F 1608
C1236	1-131-992-11	s	CAP, CERAMIC 100000PF F 1608
C1237	1-131-992-11	s	CAP, CERAMIC 100000PF F 1608
C1238	1-115-412-11	s	CAPACITOR,CERAMIC 680PF/25V CH
C1239	1-131-992-11	s	CAP, CERAMIC 100000PF F 1608
C1241	1-131-992-11	s	CAP, CERAMIC 100000PF F 1608
C1242	1-162-927-11	s	CAPACITOR,CERAMIC 100PF/50V CH
C1245	1-131-992-11	s	CAP, CERAMIC 100000PF F 1608
C1246	1-162-959-11	s	CAPACITOR,CERAMIC 330PF/50V SL
C1249	1-131-992-11	s	CAP, CERAMIC 100000PF F 1608
C1250	1-131-992-11	s	CAP, CERAMIC 100000PF F 1608
C1251	1-131-992-11	s	CAP, CERAMIC 100000PF F 1608
C1252	1-126-246-11	s	CAPACITOR ELECT 220MF/4V(CHIP)

(VPR-64 BOARD [SUFFIX 17-] for MSW RECORDER)

Ref. No. or Q'ty	Part No.	SP	Description
C1254	1-126-246-11	s	CAPACITOR ELECT 220MF/4V(CHIP)
C1256	1-165-811-11	s	CAPACITOR CHIP CERAMIC 22MF B
C1258	1-131-992-11	s	CAP, CERAMIC 100000PF F 1608
C1259	1-131-992-11	s	CAP, CERAMIC 100000PF F 1608
C1261	1-131-992-11	s	CAP, CERAMIC 100000PF F 1608
C1265	1-131-992-11	s	CAP, CERAMIC 100000PF F 1608
C1266	1-131-992-11	s	CAP, CERAMIC 100000PF F 1608
C1267	1-131-992-11	s	CAP, CERAMIC 100000PF F 1608
C1272	1-131-992-11	s	CAP, CERAMIC 100000PF F 1608
C1273	1-131-992-11	s	CAP, CERAMIC 100000PF F 1608
C1274	1-131-992-11	s	CAP, CERAMIC 100000PF F 1608
C1275	1-131-992-11	s	CAP, CERAMIC 100000PF F 1608
C1276	1-131-992-11	s	CAP, CERAMIC 100000PF F 1608
C1277	1-131-992-11	s	CAP, CERAMIC 100000PF F 1608
C1278	1-131-992-11	s	CAP, CERAMIC 100000PF F 1608
C1279	1-131-992-11	s	CAP, CERAMIC 100000PF F 1608
C1280	1-131-992-11	s	CAP, CERAMIC 100000PF F 1608
C1281	1-131-992-11	s	CAP, CERAMIC 100000PF F 1608
C1282	1-131-992-11	s	CAP, CERAMIC 100000PF F 1608
C1283	1-131-992-11	s	CAP, CERAMIC 100000PF F 1608
C1284	1-131-992-11	s	CAP, CERAMIC 100000PF F 1608
C1285	1-131-992-11	s	CAP, CERAMIC 100000PF F 1608
C1286	1-131-992-11	s	CAP, CERAMIC 100000PF F 1608
C1287	1-131-992-11	s	CAP, CERAMIC 100000PF F 1608
C1288	1-131-992-11	s	CAP, CERAMIC 100000PF F 1608
C1289	1-131-992-11	s	CAP, CERAMIC 100000PF F 1608
C1290	1-131-992-11	s	CAP, CERAMIC 100000PF F 1608
C1291	1-131-992-11	s	CAP, CERAMIC 100000PF F 1608
C1292	1-131-992-11	s	CAP, CERAMIC 100000PF F 1608
C1293	1-131-992-11	s	CAP, CERAMIC 100000PF F 1608
C1294	1-131-992-11	s	CAP, CERAMIC 100000PF F 1608
C1295	1-131-992-11	s	CAP, CERAMIC 100000PF F 1608
C1296	1-131-992-11	s	CAP, CERAMIC 100000PF F 1608
C1297	1-131-992-11	s	CAP, CERAMIC 100000PF F 1608
C1298	1-131-992-11	s	CAP, CERAMIC 100000PF F 1608
C1299	1-131-992-11	s	CAP, CERAMIC 100000PF F 1608
C1300	1-131-992-11	s	CAP, CERAMIC 100000PF F 1608
C1301	1-131-992-11	s	CAP, CERAMIC 100000PF F 1608
C1302	1-131-992-11	s	CAP, CERAMIC 100000PF F 1608
C1303	1-164-227-11	s	CAPACITOR,CERAMIC 0.022MF/25V
C1304	1-164-227-11	s	CAPACITOR,CERAMIC 0.022MF/25V
C1305	1-162-927-11	s	CAPACITOR,CERAMIC 100PF/50V CH
C1306	1-131-992-11	s	CAP, CERAMIC 100000PF F 1608
C1307	1-131-992-11	s	CAP, CERAMIC 100000PF F 1608
C1308	1-131-992-11	s	CAP, CERAMIC 100000PF F 1608
C1309	1-162-927-11	s	CAPACITOR,CERAMIC 100PF/50V CH
C1310	1-162-927-11	s	CAPACITOR,CERAMIC 100PF/50V CH
C1311	1-164-380-11	s	CAPACITOR,CERAMIC 51PF CH (M-)
C1313	1-128-590-11	s	CAPACITOR ELECT 100MF/6.3V(105
C1314	1-128-590-11	s	CAPACITOR ELECT 100MF/6.3V(105
C1315	1-162-968-11	s	CAPACITOR,CERAMIC 4700PF/50V B
C1316	1-131-992-11	s	CAP, CERAMIC 100000PF F 1608
C1319	1-131-992-11	s	CAP, CERAMIC 100000PF F 1608
C1320	1-131-992-11	s	CAP, CERAMIC 100000PF F 1608
C1321	1-131-992-11	s	CAP, CERAMIC 100000PF F 1608
C1322	1-131-992-11	s	CAP, CERAMIC 100000PF F 1608
C1323	1-131-992-11	s	CAP, CERAMIC 100000PF F 1608
C1324	1-131-992-11	s	CAP, CERAMIC 100000PF F 1608
C1325	1-131-992-11	s	CAP, CERAMIC 100000PF F 1608

(VPR-64 BOARD [SUFFIX 17-] for MSW RECORDER)

Ref. No. or Q'ty	Part No.	SP	Description
C1326	1-128-590-11	s	CAPACITOR ELECT 100MF/6.3V(105
C1400	1-131-992-11	s	CAP, CERAMIC 100000PF F 1608
C1401	1-131-992-11	s	CAP, CERAMIC 100000PF F 1608
C1402	1-131-992-11	s	CAP, CERAMIC 100000PF F 1608
C1403	1-131-992-11	s	CAP, CERAMIC 100000PF F 1608
C1404	1-131-992-11	s	CAP, CERAMIC 100000PF F 1608
C1405	1-131-992-11	s	CAP, CERAMIC 100000PF F 1608
C1406	1-131-992-11	s	CAP, CERAMIC 100000PF F 1608
C1407	1-131-992-11	s	CAP, CERAMIC 100000PF F 1608
C1408	1-131-992-11	s	CAP, CERAMIC 100000PF F 1608
C1410	1-131-992-11	s	CAP, CERAMIC 100000PF F 1608
C1411	1-131-992-11	s	CAP, CERAMIC 100000PF F 1608
C1412	1-131-992-11	s	CAP, CERAMIC 100000PF F 1608
C1413	1-162-919-11	s	CAPACITOR,CERAMIC 22PF/50V CH
C1416	1-162-919-11	s	CAPACITOR,CERAMIC 22PF/50V CH
C1417	1-162-919-11	s	CAPACITOR,CERAMIC 22PF/50V CH
C1418	1-162-970-11	s	CAPACITOR CERAMIC 0.01MF/25V B
C1420	1-162-970-11	s	CAPACITOR CERAMIC 0.01MF/25V B
C1421	1-162-970-11	s	CAPACITOR CERAMIC 0.01MF/25V B
C1422	1-162-970-11	s	CAPACITOR CERAMIC 0.01MF/25V B
C1423	1-131-992-11	s	CAP, CERAMIC 100000PF F 1608
C1424	1-162-919-11	s	CAPACITOR,CERAMIC 22PF/50V CH
C1426	1-162-919-11	s	CAPACITOR,CERAMIC 22PF/50V CH
C1427	1-162-919-11	s	CAPACITOR,CERAMIC 22PF/50V CH
C1428	1-162-919-11	s	CAPACITOR,CERAMIC 22PF/50V CH
C1429	1-162-919-11	s	CAPACITOR,CERAMIC 22PF/50V CH
C1431	1-162-919-11	s	CAPACITOR,CERAMIC 22PF/50V CH
C1432	1-162-919-11	s	CAPACITOR,CERAMIC 22PF/50V CH
C1433	1-162-919-11	s	CAPACITOR,CERAMIC 22PF/50V CH
C1434	1-131-992-11	s	CAP, CERAMIC 100000PF F 1608
C1435	1-131-992-11	s	CAP, CERAMIC 100000PF F 1608
C1436	1-131-992-11	s	CAP, CERAMIC 100000PF F 1608
C1437	1-131-992-11	s	CAP, CERAMIC 100000PF F 1608
C1438	1-162-919-11	s	CAPACITOR,CERAMIC 22PF/50V CH
C1439	1-162-919-11	s	CAPACITOR,CERAMIC 22PF/50V CH
C1440	1-162-919-11	s	CAPACITOR,CERAMIC 22PF/50V CH
C1441	1-162-970-11	s	CAPACITOR CERAMIC 0.01MF/25V B
C1442	1-131-992-11	s	CAP, CERAMIC 100000PF F 1608
C1443	1-131-992-11	s	CAP, CERAMIC 100000PF F 1608
C1444	1-131-992-11	s	CAP, CERAMIC 100000PF F 1608
C1445	1-131-992-11	s	CAP, CERAMIC 100000PF F 1608
C1446	1-131-992-11	s	CAP, CERAMIC 100000PF F 1608
C1447	1-131-992-11	s	CAP, CERAMIC 100000PF F 1608
C1448	1-131-992-11	s	CAP, CERAMIC 100000PF F 1608
C1449	1-131-992-11	s	CAP, CERAMIC 100000PF F 1608
C1450	1-127-692-11	s	CAP, CHIP CERAMIC 10MF B 3216
C1451	1-131-992-11	s	CAP, CERAMIC 100000PF F 1608
C1452	1-131-992-11	s	CAP, CERAMIC 100000PF F 1608
C1505	1-104-607-11	s	CAPACITOR ELECT 47MF/16V(105C)
C1507	1-131-992-11	s	CAP, CERAMIC 100000PF F 1608
C1508	1-128-590-11	s	CAPACITOR ELECT 100MF/6.3V(105
C1509	1-131-992-11	s	CAP, CERAMIC 100000PF F 1608
C1510	1-104-607-11	s	CAPACITOR ELECT 47MF/16V(105C)
C1511	1-131-992-11	s	CAP, CERAMIC 100000PF F 1608
C1534	1-131-992-11	s	CAP, CERAMIC 100000PF F 1608
C1535	1-131-992-11	s	CAP, CERAMIC 100000PF F 1608
C1536	1-131-992-11	s	CAP, CERAMIC 100000PF F 1608
C1538	1-131-992-11	s	CAP, CERAMIC 100000PF F 1608
C1539	1-131-992-11	s	CAP, CERAMIC 100000PF F 1608

(VPR-64 BOARD [SUFFIX 17-] for MSW RECORDER)

Ref. No. or Q'ty	Part No.	SP	Description	
C1540	1-164-230-11	s	CAPACITOR,CERAMIC 220PF/50V	
C1541	1-131-992-11	s	CAP, CERAMIC 100000PF F 1608	
C1542	1-131-992-11	s	CAP, CERAMIC 100000PF F 1608	
C1543	1-131-992-11	s	CAP, CERAMIC 100000PF F 1608	
C1544	1-131-992-11	s	CAP, CERAMIC 100000PF F 1608	
C1545	1-131-992-11	s	CAP, CERAMIC 100000PF F 1608	
C1548	1-128-451-11	s	CAPACITOR ELECT 22MF/16V(105C)	
C1549	1-131-992-11	s	CAP, CERAMIC 100000PF F 1608	
C1550	1-131-992-11	s	CAP, CERAMIC 100000PF F 1608	
C1552	1-131-992-11	s	CAP, CERAMIC 100000PF F 1608	
C1555	1-131-992-11	s	CAP, CERAMIC 100000PF F 1608	
C1556	1-131-992-11	s	CAP, CERAMIC 100000PF F 1608	
C1559	1-131-992-11	s	CAP, CERAMIC 100000PF F 1608	
C1560	1-131-992-11	s	CAP, CERAMIC 100000PF F 1608	
C1561	1-131-992-11	s	CAP, CERAMIC 100000PF F 1608	
C1563	1-131-992-11	s	CAP, CERAMIC 100000PF F 1608	
C1565	1-131-992-11	s	CAP, CERAMIC 100000PF F 1608	
C1568	1-131-992-11	s	CAP, CERAMIC 100000PF F 1608	
C1569	1-131-992-11	s	CAP, CERAMIC 100000PF F 1608	
C1570	1-115-416-11	s	CAPACITOR,CERAMIC 1000PF/25V	
C1571	1-115-416-11	s	CAPACITOR,CERAMIC 1000PF/25V	
C1572	1-131-992-11	s	CAP, CERAMIC 100000PF F 1608	
C1573	1-131-992-11	s	CAP, CERAMIC 100000PF F 1608	
C1575	1-128-590-11	s	CAPACITOR ELECT 100MF/6.3V(105	
C1577	1-131-992-11	s	CAP, CERAMIC 100000PF F 1608	
C1578	1-131-992-11	s	CAP, CERAMIC 100000PF F 1608	
C1579	1-162-919-11	s	CAPACITOR,CERAMIC 22PF/50V CH	
C1590	1-125-889-11	s	CAPACITOR, CERAMIC 2.2MF	
C1591	1-125-889-11	s	CAPACITOR, CERAMIC 2.2MF	
CN700	1-580-789-91	s	PIN, CONNECTOR 6P	
D100	8-719-820-41	s	DIODE 1SS302	
D102	8-719-975-40	s	DIODE RB411D	(RECTI)
D103	8-719-975-40	s	DIODE RB411D	(RECTI)
D104	8-719-016-95	s	DIODE 02DZ3.3-TPH3	
D303	8-719-820-41	s	DIODE 1SS302	
D304	8-719-975-40	s	DIODE RB411D	(RECTI)
D500	8-719-016-95	s	DIODE 02DZ3.3-TPH3	
D501	8-719-016-95	s	DIODE 02DZ3.3-TPH3	
D502	8-719-016-95	s	DIODE 02DZ3.3-TPH3	
D504	8-719-975-40	s	DIODE RB411D	(RECTI)
D700	8-719-975-40	s	DIODE RB411D	(RECTI)
D900	8-719-820-41	s	DIODE 1SS302	
D901	8-719-820-41	s	DIODE 1SS302	
D902	8-719-975-40	s	DIODE RB411D	(RECTI)
D903	8-719-820-41	s	DIODE 1SS302	
D904	8-719-975-40	s	DIODE RB411D	(RECTI)
D1100	8-719-975-40	s	DIODE RB411D	(RECTI)
D1101	8-719-820-41	s	DIODE 1SS302	
D1103	8-719-975-40	s	DIODE RB411D	(RECTI)
D1200	8-719-820-41	s	DIODE 1SS302	
D1201	8-719-820-41	s	DIODE 1SS302	
D1203	8-719-975-40	s	DIODE RB411D	(RECTI)
D1204	8-719-975-40	s	DIODE RB411D	(RECTI)
D1205	8-719-975-40	s	DIODE RB411D	(RECTI)
D1401	8-719-820-41	s	DIODE 1SS302	
E101	1-535-877-22	s	CHIP,CHECKER (TEST POINT)	
E300	1-535-877-22	s	CHIP,CHECKER (TEST POINT)	
E500	1-535-877-22	s	CHIP,CHECKER (TEST POINT)	

(VPR-64 BOARD [SUFFIX 17-] for MSW RECORDER)

Ref. No. or Q'ty	Part No.	SP	Description
E700	1-535-877-22	s	CHIP,CHECKER (TEST POINT)
E900	1-535-877-22	s	CHIP,CHECKER (TEST POINT)
E1200	1-535-877-22	s	CHIP,CHECKER (TEST POINT)
E1201	1-535-877-22	s	CHIP,CHECKER (TEST POINT)
F1500	⚠ 1-533-627-21	s	FUSE CHIP 5A/125V (6125)
F1501	⚠ 1-533-627-21	s	FUSE CHIP 5A/125V (6125)
F1502	⚠ 1-533-627-21	s	FUSE CHIP 5A/125V (6125)
FB1	1-469-094-11	s	FERRITE, EMI (SMD)
FB300	1-469-094-11	s	FERRITE, EMI (SMD)
FB301	1-469-094-11	s	FERRITE, EMI (SMD)
FB1201	1-469-094-11	s	FERRITE, EMI (SMD)
FB1204	1-469-094-11	s	FERRITE, EMI (SMD)
FB1207	1-469-094-11	s	FERRITE, EMI (SMD)
FL100	1-234-006-11	s	FILTER, LOW PASS
FL500	1-234-006-11	s	FILTER, LOW PASS
FL501	1-239-932-31	s	FILTER, LOW PASS (3MHZ)
FL502	1-239-932-31	s	FILTER, LOW PASS (3MHZ)
FL700	1-233-674-21	s	FILTER, EMI
FL701	1-233-674-21	s	FILTER, EMI
FL702	1-233-674-21	s	FILTER, EMI
FL703	1-233-674-21	s	FILTER, EMI
FL800	1-233-674-21	s	FILTER, EMI
FL801	1-233-674-21	s	FILTER, EMI
FL802	1-233-674-21	s	FILTER, EMI
FL900	1-239-931-31	s	FILTER, LOW PASS (6MHZ)
FL901	1-239-931-31	s	FILTER, LOW PASS (6MHZ)
FL902	1-239-931-31	s	FILTER, LOW PASS (6MHZ)
FL903	1-239-931-31	s	FILTER, LOW PASS (6MHZ)
FL1400	1-233-674-21	s	FILTER, EMI
FL1401	1-233-674-21	s	FILTER, EMI
FL1402	1-233-674-21	s	FILTER, EMI
FL1403	1-233-674-21	s	FILTER, EMI
FL1404	1-233-674-21	s	FILTER, EMI
FL1405	1-233-674-21	s	FILTER, EMI
FL1406	1-239-898-22	s	FILTER, EMI (SMD)
FL1407	1-239-898-22	s	FILTER, EMI (SMD)
FL1408	1-239-898-22	s	FILTER, EMI (SMD)
FL1409	1-239-898-22	s	FILTER, EMI (SMD)
FL1410	1-239-898-22	s	FILTER, EMI (SMD)
FL1411	1-239-898-22	s	FILTER, EMI (SMD)
FL1412	1-239-898-22	s	FILTER, EMI (SMD)
FL1413	1-239-898-22	s	FILTER, EMI (SMD)
FL1414	1-233-674-21	s	FILTER, EMI
FL1415	1-239-898-22	s	FILTER, EMI (SMD)
IC100	8-759-533-85	s	IC L88M05T-FA-TL
IC101	8-759-539-89	s	IC LM2990SX-5.0
IC103	8-759-339-66	s	IC LT1122CS8-E1
IC104	6-705-028-01	s	IC LMH6502MAX
IC107	6-704-406-01	s	IC LM1881MX/NOPB
IC109	8-759-196-97	s	IC TC7SH32FU (TE85R)
IC110	8-752-068-24	s	IC CXA1450M-TH
IC112	8-759-702-08	s	IC NJM360M
IC113	8-759-183-53	s	IC TL431CPK-E2
IC114	8-759-183-53	s	IC TL431CPK-E2
IC115	8-759-669-74	s	IC TL084CPWR-12
IC116	8-759-669-73	s	IC TL082CPWR
IC117	8-759-524-18	s	IC TC74VHC163FT(EL)

(VPR-64 BOARD [SUFFIX 17-] for MSW RECORDER)

Ref. No. or Q'ty	Part No.	SP	Description
IC118	6-704-161-01	s	IC S-80840CNUA-B8ZT2G
IC119	8-759-524-18	s	IC TC74VHC163FT(EL)
IC120	8-752-376-32	s	IC CXD2310AR
IC121	8-759-702-08	s	IC NJM360M
IC122	8-759-528-99	s	IC TC74VHC221AFT(EL)
IC126	8-759-669-74	s	IC TL084CPWR-12
IC129	8-759-523-97	s	IC TC74VHC123AFT(EL)
IC130	8-759-669-74	s	IC TL084CPWR-12
IC132	8-759-528-99	s	IC TC74VHC221AFT(EL)
IC134	6-700-915-01	s	IC SN74AHCT04PWR
IC139	8-759-082-61	s	IC TC4W53FU
IC140	8-759-082-61	s	IC TC4W53FU
IC141	8-759-082-61	s	IC TC4W53FU
IC142	8-759-082-61	s	IC TC4W53FU
IC143	8-759-196-97	s	IC TC7SH32FU (TE85R)
IC144	8-759-196-97	s	IC TC7SH32FU (TE85R)
IC145	8-759-669-73	s	IC TL082CPWR
IC146	8-759-523-95	s	IC TC74VHC74FT(EL)
IC147	8-759-528-99	s	IC TC74VHC221AFT(EL)
IC148	8-759-528-99	s	IC TC74VHC221AFT(EL)
IC149	8-759-523-97	s	IC TC74VHC123AFT(EL)
IC150	8-759-523-95	s	IC TC74VHC74FT(EL)
IC151	8-759-573-91	s	IC AD8055ARTZ-REEL7
IC152	6-702-436-01	s	IC AD8061ART-REEL7
IC153	8-752-068-24	s	IC CXA1450M-TH
IC154	6-702-436-01	s	IC AD8061ART-REEL7
IC301	8-759-549-15	s	IC SN74LV245APWR
IC302	8-752-334-55	s	IC CXD1175AM
IC303	8-759-196-97	s	IC TC7SH32FU (TE85R)
IC305	8-759-549-15	s	IC SN74LV245APWR
IC308	8-759-669-75	s	IC TLC2932IPWR
IC313	8-759-639-07	o	IC CXD9101R
IC316	6-700-915-01	s	IC SN74AHCT04PWR
IC317	6-701-541-01	s	IC TLC2272CPW (R)
IC319	8-759-392-77	s	IC SN74LVC245APW (E20)
IC320	8-759-669-74	s	IC TL084CPWR-12
IC321	8-759-564-49	s	IC TC7W53FU-TE12R
IC323	8-759-523-97	s	IC TC74VHC123AFT(EL)
IC324	8-759-523-95	s	IC TC74VHC74FT(EL)
IC325	8-759-196-97	s	IC TC7SH32FU (TE85R)
IC326	8-759-523-95	s	IC TC74VHC74FT(EL)
IC327	8-759-271-86	s	IC TC7SH04FU
IC328	6-700-399-01	s	IC UPC2925T-E1
IC502	6-704-406-01	s	IC LM1881MX/NOPB
IC503	8-759-528-99	s	IC TC74VHC221AFT(EL)
IC504	8-759-669-74	s	IC TL084CPWR-12
IC505	8-759-669-74	s	IC TL084CPWR-12
IC506	8-759-669-74	s	IC TL084CPWR-12
IC507	8-759-669-74	s	IC TL084CPWR-12
IC509	8-759-196-96	s	IC TC7SH08FU (TE85R)
IC510	8-759-196-96	s	IC TC7SH08FU (TE85R)
IC511	8-759-669-74	s	IC TL084CPWR-12
IC513	8-759-523-78	s	IC TC74VHC00FT(EL)
IC514	8-759-082-60	s	IC TC7S66FU
IC515	8-759-669-73	s	IC TL082CPWR
IC516	8-759-082-60	s	IC TC7S66FU
IC517	8-759-082-60	s	IC TC7S66FU
IC518	8-759-702-08	s	IC NJM360M
IC519	8-759-702-08	s	IC NJM360M

(VPR-64 BOARD [SUFFIX 17-] for MSW RECORDER)

Ref. No. or Q'ty	Part No.	SP	Description
IC520	8-759-183-53	s	IC TL431CPK-E2
IC521	8-759-549-15	s	IC SN74LV245APWR
IC522	8-759-183-53	s	IC TL431CPK-E2
IC523	8-752-376-32	s	IC CXD2310AR
IC524	8-759-524-52	s	IC TC74VHC574FT(EL)
IC525	8-759-523-95	s	IC TC74VHC74FT(EL)
IC526	8-759-533-85	s	IC L88M05T-FA-TL
IC702	8-759-549-01	s	IC SN74LV125APWR
IC703	8-759-524-52	s	IC TC74VHC574FT(EL)
IC704	8-759-524-52	s	IC TC74VHC574FT(EL)
IC705	8-759-524-52	s	IC TC74VHC574FT(EL)
IC707	8-759-639-85	s	IC SN65LVDS31DR
IC708	8-759-392-77	s	IC SN74LVC245APW (E20)
IC709	8-759-392-77	s	IC SN74LVC245APW (E20)
IC710	8-759-392-77	s	IC SN74LVC245APW (E20)
IC711	8-759-392-77	s	IC SN74LVC245APW (E20)
IC712	8-759-524-10	s	IC TC74VHC157FT (EL)
IC713	6-701-068-01	s	IC SI-3018LSA-TL
IC715	6-802-600-03	s	IC XC18V02-VPR64-V209
IC716	8-759-524-27	s	IC TC74VHC244FT(EL)
IC717	8-759-271-86	s	IC TC7SH04FU
IC801	8-759-524-52	s	IC TC74VHC574FT(EL)
IC802	8-759-524-52	s	IC TC74VHC574FT(EL)
IC803	8-759-524-52	s	IC TC74VHC574FT(EL)
IC804	8-759-524-52	s	IC TC74VHC574FT(EL)
IC805	8-759-524-52	s	IC TC74VHC574FT(EL)
IC806	6-705-983-01	s	IC IS42S32200B-6TL-TR
IC807	6-705-983-01	s	IC IS42S32200B-6TL-TR
IC808	6-705-983-01	s	IC IS42S32200B-6TL-TR
IC809	8-759-392-77	s	IC SN74LVC245APW (E20)
IC810	8-759-392-77	s	IC SN74LVC245APW (E20)
IC811	8-759-392-77	s	IC SN74LVC245APW (E20)
IC813	6-705-983-01	s	IC IS42S32200B-6TL-TR
IC902	8-759-654-93	s	IC CXD9100AR
IC903	6-703-188-01	s	IC S-80827CNNB-B8MT2G
IC906	6-700-915-01	s	IC SN74AHCT04PWR
IC910	8-759-669-75	s	IC TLC2932IPWR
IC912	8-759-196-93	s	IC TC7SH00FU-TE85R
IC913	8-759-524-52	s	IC TC74VHC574FT(EL)
IC914	8-759-524-52	s	IC TC74VHC574FT(EL)
IC915	8-759-524-52	s	IC TC74VHC574FT(EL)
IC916	8-759-524-52	s	IC TC74VHC574FT(EL)
IC917	8-759-196-96	s	IC TC7SH08FU (TE85R)
IC918	8-759-082-60	s	IC TC7S66FU
IC919	8-759-669-73	s	IC TL082CPWR
IC920	8-752-357-63	s	IC CXD2308Q
IC922	8-759-573-91	s	IC AD8055ARTZ-REEL7
IC923	8-759-573-91	s	IC AD8055ARTZ-REEL7
IC924	8-759-573-91	s	IC AD8055ARTZ-REEL7
IC925	8-759-573-91	s	IC AD8055ARTZ-REEL7
IC926	6-701-524-01	s	IC SN74LS221DBR
IC927	8-759-564-49	s	IC TC7W53FU-TE12R
IC928	8-759-564-49	s	IC TC7W53FU-TE12R
IC929	8-759-564-49	s	IC TC7W53FU-TE12R
IC930	8-759-564-49	s	IC TC7W53FU-TE12R
IC931	8-759-669-73	s	IC TL082CPWR
IC932	8-759-669-73	s	IC TL082CPWR
IC933	8-759-669-73	s	IC TL082CPWR
IC934	8-759-669-73	s	IC TL082CPWR

(VPR-64 BOARD [SUFFIX 17-] for MSW RECORDER)

Ref. No. or Q'ty	Part No.	SP	Description
IC935	8-759-573-91	s	IC AD8055ARTZ-REEL7
IC936	8-752-068-24	s	IC CXA1450M-TH
IC937	8-759-573-91	s	IC AD8055ARTZ-REEL7
IC938	8-759-573-91	s	IC AD8055ARTZ-REEL7
IC939	8-759-573-91	s	IC AD8055ARTZ-REEL7
IC940	8-759-573-91	s	IC AD8055ARTZ-REEL7
IC941	8-759-573-91	s	IC AD8055ARTZ-REEL7
IC943	8-759-196-93	s	IC TC7SH00FU-TE85R
IC944	8-759-549-01	s	IC SN74LV125APWR
IC945	8-759-564-49	s	IC TC7W53FU-TE12R
IC947	8-759-564-49	s	IC TC7W53FU-TE12R
IC949	8-759-533-85	s	IC L88M05T-FA-TL
IC950	6-701-871-11	s	IC TK72150MCL-G
IC951	8-759-082-60	s	IC TC7S66FU
IC952	6-700-399-01	s	IC UPC2925T-E1
IC1100	8-759-533-85	s	IC L88M05T-FA-TL
IC1101	6-701-871-11	s	IC TK72150MCL-G
IC1103	6-704-406-01	s	IC LM1881MX/NOPB
IC1104	8-759-392-77	s	IC SN74LVC245APW (E20)
IC1105	8-759-702-08	s	IC NJM360M
IC1107	8-759-702-08	s	IC NJM360M
IC1113	8-759-528-99	s	IC TC74VHC221AFT(EL)
IC1114	8-759-669-73	s	IC TL082CPWR
IC1117	8-759-523-81	s	IC TC74VHC08FT(EL)
IC1118	8-759-524-09	s	IC TC74VHC153FT (EL)
IC1119	6-700-352-01	s	IC SN74CBTLV3253PWR
IC1120	8-759-833-99	s	IC MC74HC4052ADTR2
IC1121	8-759-392-77	s	IC SN74LVC245APW (E20)
IC1122	8-759-392-77	s	IC SN74LVC245APW (E20)
IC1123	8-759-549-15	s	IC SN74LV245APWR
IC1124	8-759-549-15	s	IC SN74LV245APWR
IC1125	8-759-549-15	s	IC SN74LV245APWR
IC1126	8-759-549-01	s	IC SN74LV125APWR
IC1127	8-759-549-15	s	IC SN74LV245APWR
IC1128	8-759-549-15	s	IC SN74LV245APWR
IC1129	8-759-271-86	s	IC TC7SH04FU
IC1130	8-759-639-86	s	IC SN65LVDS32DR
IC1131	8-759-271-86	s	IC TC7SH04FU
IC1132	8-759-271-86	s	IC TC7SH04FU
IC1134	6-700-268-01	s	IC SN74CBTLV3125PWR
IC1200	8-759-183-53	s	IC TL431CPK-E2
IC1201	8-759-669-75	s	IC TLC2932IPWR
IC1202	8-759-702-08	s	IC NJM360M
IC1204	8-759-702-08	s	IC NJM360M
IC1212	8-759-491-46	s	IC TC74VHCT04AFT (EL)
IC1214	8-759-669-74	s	IC TL084CPWR-12
IC1216	6-701-524-01	s	IC SN74LS221DBR
IC1220	6-701-524-01	s	IC SN74LS221DBR
IC1221	8-759-669-74	s	IC TL084CPWR-12
IC1230	8-759-669-75	s	IC TLC2932IPWR
IC1231	8-759-564-49	s	IC TC7W53FU-TE12R
IC1232	8-759-392-77	s	IC SN74LVC245APW (E20)
IC1234	8-759-392-77	s	IC SN74LVC245APW (E20)
IC1235	8-759-082-60	s	IC TC7S66FU
IC1236	8-759-082-60	s	IC TC7S66FU
IC1237	8-759-523-02	s	IC TC74HC4053AFT(EL)
IC1238	8-759-564-49	s	IC TC7W53FU-TE12R
IC1239	8-759-271-86	s	IC TC7SH04FU
IC1240	6-701-524-01	s	IC SN74LS221DBR

(VPR-64 BOARD [SUFFIX 17-] for MSW RECORDER)

Ref. No. or Q'ty	Part No.	SP	Description
IC1241	8-759-196-96	s	IC TC7SH08FU (TE85R)
IC1243	6-700-915-01	s	IC SN74AHCT04PWR
IC1244	8-759-669-74	s	IC TL084CPWR-12
IC1245	8-759-491-46	s	IC TC74VHCT04AFT (EL)
IC1247	8-759-523-95	s	IC TC74VHC74FT(EL)
IC1248	8-759-523-96	s	IC TC74VHC86FT (EL)
IC1249	8-759-523-95	s	IC TC74VHC74FT(EL)
IC1250	6-701-524-01	s	IC SN74LS221DBR
IC1251	8-759-453-97	s	IC TC7SET08FU-TE85R
IC1252	8-759-271-86	s	IC TC7SH04FU
IC1253	8-759-524-10	s	IC TC74VHC157FT (EL)
IC1256	8-752-375-98	s	IC CXD2315Q
IC1401	6-703-875-01	s	IC CDCVF2505PWR
IC1406	8-759-392-77	s	IC SN74LVC245APW (E20)
IC1407	8-759-524-18	s	IC TC74VHC163FT(EL)
IC1408	8-759-549-15	s	IC SN74LV245APWR
IC1409	8-759-392-77	s	IC SN74LVC245APW (E20)
IC1413	8-759-523-95	s	IC TC74VHC74FT(EL)
IC1417	8-759-523-95	s	IC TC74VHC74FT(EL)
IC1418	8-759-392-77	s	IC SN74LVC245APW (E20)
IC1419	8-759-392-77	s	IC SN74LVC245APW (E20)
IC1420	8-759-392-77	s	IC SN74LVC245APW (E20)
IC1421	8-759-392-77	s	IC SN74LVC245APW (E20)
IC1422	8-759-392-77	s	IC SN74LVC245APW (E20)
IC1423	8-759-392-77	s	IC SN74LVC245APW (E20)
IC1426	8-759-523-78	s	IC TC74VHC00FT(EL)
IC1427	8-759-523-78	s	IC TC74VHC00FT(EL)
IC1428	8-759-523-78	s	IC TC74VHC00FT(EL)
IC1429	8-759-491-46	s	IC TC74VHCT04AFT (EL)
IC1430	8-759-523-81	s	IC TC74VHC08FT(EL)
IC1431	8-759-523-94	s	IC TC74VHC32FT(EL)
IC1432	8-759-549-15	s	IC SN74LV245APWR
IC1433	8-759-549-15	s	IC SN74LV245APWR
IC1434	8-759-523-95	s	IC TC74VHC74FT(EL)
IC1505	8-759-524-07	s	IC TC74VHC138FT(EL)
IC1509	8-752-392-03	s	IC CXD1095BR
IC1510	8-759-524-07	s	IC TC74VHC138FT(EL)
IC1511	8-759-549-15	s	IC SN74LV245APWR
IC1512	8-759-468-72	s	IC AK6420AM (E2)
IC1513	8-759-183-53	s	IC TL431CPK-E2
IC1514	8-759-539-53	s	IC MB90096PF-G-139-BND(ER)
IC1522	8-759-491-46	s	IC TC74VHCT04AFT (EL)
IC1525	8-759-491-47	s	IC TC74VHCT08FT (EL)
IC1526	8-759-490-42	s	IC TC74VHCT574AFT(EL)
IC1527	8-759-523-81	s	IC TC74VHC08FT(EL)
IC1528	8-759-196-96	s	IC TC7SH08FU (TE85R)
IC1529	8-759-271-86	s	IC TC7SH04FU
IC1530	8-759-491-46	s	IC TC74VHCT04AFT (EL)
IC1531	6-700-915-01	s	IC SN74AHCT04PWR
IC1532	8-759-549-15	s	IC SN74LV245APWR
IC1533	8-759-549-15	s	IC SN74LV245APWR
IC1534	8-759-549-15	s	IC SN74LV245APWR
IC1535	8-759-549-15	s	IC SN74LV245APWR
IC1536	8-759-578-68	s	IC SN74LVCC4245APWR
IC1537	8-759-578-68	s	IC SN74LVCC4245APWR
IC1538	8-759-523-94	s	IC TC74VHC32FT(EL)
IC1539	8-759-549-01	s	IC SN74LV125APWR
IC1540	8-759-536-93	s	IC M62371GP-600D
IC1541	8-759-523-81	s	IC TC74VHC08FT(EL)

(VPR-64 BOARD [SUFFIX 17-] for MSW RECORDER)

Ref. No. or Q'ty	Part No.	SP	Description
IC1542	8-759-833-99	s	IC MC74HC4052ADTR2
IC1543	8-759-669-73	s	IC TL082CPWR
IC1544	8-759-523-94	s	IC TC74VHC32FT(EL)
IC1545	8-759-491-47	s	IC TC74VHCT08FT (EL)
IC1546	6-700-915-01	s	IC SN74AHCT04PWR
IC1547	6-700-915-01	s	IC SN74AHCT04PWR
IC1548	8-759-491-47	s	IC TC74VHCT08FT (EL)
L101	1-414-170-41	s	INDUCTOR, CHIP 100UH (2012)
L102	1-414-170-41	s	INDUCTOR, CHIP 100UH (2012)
L104	1-412-983-31	s	INDUCTOR, SMALL TYPE 2.2UH
L105	1-412-979-21	s	INDUCTOR (SMALL TYPE)
L106	1-412-976-41	s	INDUCTOR, SMALL TYPE 0.56UH
L107	1-412-976-41	s	INDUCTOR, SMALL TYPE 0.56UH
L500	1-412-995-31	s	INDUCTOR, SMALL TYPE 22.0UH
L700	1-414-398-11	s	INDUCTOR (SMD) 10UH
L900	1-414-398-11	s	INDUCTOR (SMD) 10UH
L903	1-414-398-11	s	INDUCTOR (SMD) 10UH
L904	1-414-398-11	s	INDUCTOR (SMD) 10UH
L905	1-414-398-11	s	INDUCTOR (SMD) 10UH
L906	1-414-398-11	s	INDUCTOR (SMD) 10UH
L907	1-412-970-11	s	INDUCTOR (SMALL TYPE)
L908	1-412-970-11	s	INDUCTOR (SMALL TYPE)
L909	1-414-524-31	s	INDUCTOR, SMALL TYPE 33.0UF
L910	1-414-524-31	s	INDUCTOR, SMALL TYPE 33.0UF
L911	1-414-195-31	s	INDUCTOR, CHIP 39UH
L912	1-414-195-31	s	INDUCTOR, CHIP 39UH
L913	1-414-524-31	s	INDUCTOR, SMALL TYPE 33.0UF
L914	1-414-398-11	s	INDUCTOR (SMD) 10UH
L1100	1-414-170-41	s	INDUCTOR, CHIP 100UH (2012)
L1101	1-412-993-11	s	INDUCTOR (SMALL TYPE)
L1102	1-414-195-31	s	INDUCTOR, CHIP 39UH
L1104	1-414-398-11	s	INDUCTOR (SMD) 10UH
L1200	1-414-398-11	s	INDUCTOR (SMD) 10UH
L1201	1-414-398-11	s	INDUCTOR (SMD) 10UH
L1202	1-414-398-11	s	INDUCTOR (SMD) 10UH
L1203	1-414-398-11	s	INDUCTOR (SMD) 10UH
L1204	1-414-398-11	s	INDUCTOR (SMD) 10UH
L1205	1-414-757-11	s	INDUCTOR 100.0UH
L1206	1-414-757-11	s	INDUCTOR 100.0UH
Q100	8-729-117-32	s	TRANSISTOR 2SC4177
Q101	8-729-013-37	s	TRANSISTOR 2SC4213-AB-TE85L
Q102	8-729-140-63	s	TRANSISTOR 2SA1611-M5M6
Q103	8-729-140-63	s	TRANSISTOR 2SA1611-M5M6
Q104	8-729-143-07	s	TRANSISTOR 2SA1610-Y33
Q105	8-729-143-07	s	TRANSISTOR 2SA1610-Y33
Q106	8-729-117-32	s	TRANSISTOR 2SC4177
Q107	8-729-117-32	s	TRANSISTOR 2SC4177
Q108	8-729-140-63	s	TRANSISTOR 2SA1611-M5M6
Q109	8-729-053-44	s	TRANSISTOR 2SK880-Y-TE85R
Q110	8-729-140-63	s	TRANSISTOR 2SA1611-M5M6
Q111	8-729-140-63	s	TRANSISTOR 2SA1611-M5M6
Q112	8-729-928-81	s	TRANSISTOR DTC144EE
Q113	8-729-117-32	s	TRANSISTOR 2SC4177
Q114	8-729-117-32	s	TRANSISTOR 2SC4177
Q115	8-729-928-81	s	TRANSISTOR DTC144EE
Q116	8-729-013-37	s	TRANSISTOR 2SC4213-AB-TE85L
Q300	8-729-013-28	s	TRANSISTOR HN1B01FU-TE85R
Q301	8-729-140-63	s	TRANSISTOR 2SA1611-M5M6

(VPR-64 BOARD [SUFFIX 17-] for MSW RECORDER)

Ref. No. or Q'ty	Part No.	SP	Description
Q302	8-729-140-63	s	TRANSISTOR 2SA1611-M5M6
Q303	8-729-928-81	s	TRANSISTOR DTC144EE
Q304	8-729-928-81	s	TRANSISTOR DTC144EE
Q500	8-729-140-63	s	TRANSISTOR 2SA1611-M5M6
Q501	8-729-928-27	s	TRANSISTOR DTA144EE
Q502	8-729-140-63	s	TRANSISTOR 2SA1611-M5M6
Q503	8-729-013-37	s	TRANSISTOR 2SC4213-AB-TE85L
Q504	8-729-013-37	s	TRANSISTOR 2SC4213-AB-TE85L
Q505	8-729-140-63	s	TRANSISTOR 2SA1611-M5M6
Q506	8-729-140-63	s	TRANSISTOR 2SA1611-M5M6
Q507	8-729-140-63	s	TRANSISTOR 2SA1611-M5M6
Q508	8-729-140-63	s	TRANSISTOR 2SA1611-M5M6
Q509	8-729-117-32	s	TRANSISTOR 2SC4177
Q510	8-729-117-32	s	TRANSISTOR 2SC4177
Q511	8-729-117-32	s	TRANSISTOR 2SC4177
Q512	8-729-143-07	s	TRANSISTOR 2SA1610-Y33
Q513	8-729-117-32	s	TRANSISTOR 2SC4177
Q514	8-729-117-32	s	TRANSISTOR 2SC4177
Q515	8-729-117-32	s	TRANSISTOR 2SC4177
Q516	8-729-117-32	s	TRANSISTOR 2SC4177
Q517	8-729-117-32	s	TRANSISTOR 2SC4177
Q518	8-729-117-32	s	TRANSISTOR 2SC4177
Q519	8-729-143-07	s	TRANSISTOR 2SA1610-Y33
Q520	8-729-140-63	s	TRANSISTOR 2SA1611-M5M6
Q521	8-729-140-63	s	TRANSISTOR 2SA1611-M5M6
Q522	8-729-140-63	s	TRANSISTOR 2SA1611-M5M6
Q523	8-729-117-32	s	TRANSISTOR 2SC4177
Q524	8-729-140-63	s	TRANSISTOR 2SA1611-M5M6
Q525	8-729-117-32	s	TRANSISTOR 2SC4177
Q526	8-729-140-63	s	TRANSISTOR 2SA1611-M5M6
Q527	8-729-117-32	s	TRANSISTOR 2SC4177
Q528	8-729-140-63	s	TRANSISTOR 2SA1611-M5M6
Q700	8-729-928-81	s	TRANSISTOR DTC144EE
Q900	8-729-117-32	s	TRANSISTOR 2SC4177
Q901	8-729-117-32	s	TRANSISTOR 2SC4177
Q902	8-729-928-81	s	TRANSISTOR DTC144EE
Q903	8-729-928-81	s	TRANSISTOR DTC144EE
Q904	8-729-140-63	s	TRANSISTOR 2SA1611-M5M6
Q905	8-729-140-63	s	TRANSISTOR 2SA1611-M5M6
Q906	8-729-013-37	s	TRANSISTOR 2SC4213-AB-TE85L
Q907	8-729-013-37	s	TRANSISTOR 2SC4213-AB-TE85L
Q908	8-729-013-37	s	TRANSISTOR 2SC4213-AB-TE85L
Q909	8-729-013-37	s	TRANSISTOR 2SC4213-AB-TE85L
Q1100	8-729-140-63	s	TRANSISTOR 2SA1611-M5M6
Q1101	8-729-140-63	s	TRANSISTOR 2SA1611-M5M6
Q1102	8-729-143-07	s	TRANSISTOR 2SA1610-Y33
Q1103	8-729-143-07	s	TRANSISTOR 2SA1610-Y33
Q1104	8-729-117-32	s	TRANSISTOR 2SC4177
Q1105	8-729-117-32	s	TRANSISTOR 2SC4177
Q1107	8-729-928-81	s	TRANSISTOR DTC144EE
Q1200	8-729-140-63	s	TRANSISTOR 2SA1611-M5M6
Q1201	8-729-140-63	s	TRANSISTOR 2SA1611-M5M6
Q1204	8-729-117-32	s	TRANSISTOR 2SC4177
Q1205	8-729-117-32	s	TRANSISTOR 2SC4177
Q1206	8-729-140-63	s	TRANSISTOR 2SA1611-M5M6
Q1207	8-729-928-81	s	TRANSISTOR DTC144EE
Q1208	8-729-928-81	s	TRANSISTOR DTC144EE
Q1209	8-729-140-63	s	TRANSISTOR 2SA1611-M5M6
Q1210	8-729-140-63	s	TRANSISTOR 2SA1611-M5M6

(VPR-64 BOARD [SUFFIX 17-] for MSW RECORDER)

Ref. No. or Q'ty	Part No.	SP	Description
Q1211	8-729-013-28	s	TRANSISTOR HN1B01FU-TE85R
Q1212	8-729-013-28	s	TRANSISTOR HN1B01FU-TE85R
Q1500	8-729-117-32	s	TRANSISTOR 2SC4177
Q1501	8-729-928-81	s	TRANSISTOR DTC144EE
Q1590	8-729-140-63	s	TRANSISTOR 2SA1611-M5M6
Q1591	8-729-045-53	s	TRANSISTOR SI4431DY-T1
R100	1-218-823-11	s	RESISTOR,CHIP 100 1/10W (1608)
R101	1-218-847-11	s	RESISTOR, CHIP 1K 1/10W (1608)
R102	1-218-859-11	s	RESISTOR,CHIP 3.3K 1/10W(1608)
R103	1-216-857-11	s	RESISTOR,CHIP 1M 1/10W(1608)
R104	1-218-823-11	s	RESISTOR,CHIP 100 1/10W (1608)
R105	1-216-857-11	s	RESISTOR,CHIP 1M 1/10W(1608)
R106	1-218-859-11	s	RESISTOR,CHIP 3.3K 1/10W(1608)
R107	1-218-845-11	s	RESISTOR,CHIP 820 1/10W (1608)
R110	1-218-827-11	s	RESISTOR,CHIP 150 1/10W (1608)
R111	1-218-863-11	s	RESISTOR,CHIP 4.7K 1/10W(1608)
R112	1-218-825-11	s	RESISTOR,CHIP 120 1/10W (1608)
R113	1-211-980-11	s	RESISTOR,CHIP 30 1/10W(1608)
R115	1-218-830-11	s	RESISTOR,CHIP 200 1/10W (1608)
R116	1-218-871-11	s	RESISTOR,CHIP 10K 1/10W (1608)
R117	1-218-847-11	s	RESISTOR, CHIP 1K 1/10W (1608)
R118	1-218-873-11	s	RESISTOR,CHIP 12K 1/10W (1608)
R119	1-218-839-11	s	RESISTOR,CHIP 470 1/10W (1608)
R120	1-218-847-11	s	RESISTOR, CHIP 1K 1/10W (1608)
R121	1-218-895-11	s	RESISTOR,CHIP 100K 1/10W(1608)
R122	1-218-895-11	s	RESISTOR,CHIP 100K 1/10W(1608)
R123	1-218-875-11	s	RESISTOR,CHIP 15K 1/10W (1608)
R124	1-218-893-11	s	RESISTOR, CHIP 82K 1/10W(1608)
R125	1-218-893-11	s	RESISTOR, CHIP 82K 1/10W(1608)
R126	1-218-857-11	s	RESISTOR,CHIP 2.7K 1/10W(1608)
R128	1-218-871-11	s	RESISTOR,CHIP 10K 1/10W (1608)
R130	1-211-985-11	s	RESISTOR,CHIP 47 1/10W (1608)
R131	1-218-857-11	s	RESISTOR,CHIP 2.7K 1/10W(1608)
R132	1-218-851-11	s	RESISTOR,CHIP 1.5K 1/10W(1608)
R133	1-218-867-11	s	RESISTOR,CHIP 6.8K 1/10W(1608)
R134	1-218-865-11	s	RESISTOR,CHIP 5.6K 1/10W(1608)
R135	1-218-847-11	s	RESISTOR, CHIP 1K 1/10W (1608)
R136	1-218-845-11	s	RESISTOR,CHIP 820 1/10W (1608)
R137	1-216-857-11	s	RESISTOR,CHIP 1M 1/10W(1608)
R138	1-218-863-11	s	RESISTOR,CHIP 4.7K 1/10W(1608)
R139	1-218-847-11	s	RESISTOR, CHIP 1K 1/10W (1608)
R140	1-218-915-11	s	RESISTOR,CHIP 680K 1/10W(1608)
R142	1-218-866-11	s	RESISTOR,CHIP 6.2K 1/10W(1608)
R143	1-218-859-11	s	RESISTOR,CHIP 3.3K 1/10W(1608)
R144	1-218-871-11	s	RESISTOR,CHIP 10K 1/10W (1608)
R146	1-218-847-11	s	RESISTOR, CHIP 1K 1/10W (1608)
R147	1-218-887-11	s	RESISTOR,CHIP 47K 1/10W (1608)
R148	1-218-847-11	s	RESISTOR, CHIP 1K 1/10W (1608)
R149	1-218-853-11	s	RESISTOR,CHIP 1.8K 1/10W(1608)
R150	1-218-857-11	s	RESISTOR,CHIP 2.7K 1/10W(1608)
R151	1-218-863-11	s	RESISTOR,CHIP 4.7K 1/10W(1608)
R152	1-218-857-11	s	RESISTOR,CHIP 2.7K 1/10W(1608)
R153	1-218-863-11	s	RESISTOR,CHIP 4.7K 1/10W(1608)
R154	1-218-847-11	s	RESISTOR, CHIP 1K 1/10W (1608)
R155	1-218-887-11	s	RESISTOR,CHIP 47K 1/10W (1608)
R156	1-218-855-11	s	RESISTOR,CHIP 2.2K 1/10W(1608)
R157	1-218-871-11	s	RESISTOR,CHIP 10K 1/10W (1608)
R162	1-218-851-11	s	RESISTOR,CHIP 1.5K 1/10W(1608)

(VPR-64 BOARD [SUFFIX 17-] for MSW RECORDER)

Ref. No. or Q'ty	Part No.	SP	Description
R163	1-218-855-11	s	RESISTOR,CHIP 2.2K 1/10W(1608)
R164	1-218-851-11	s	RESISTOR,CHIP 1.5K 1/10W(1608)
R165	1-218-871-11	s	RESISTOR,CHIP 10K 1/10W (1608)
R166	1-218-857-11	s	RESISTOR,CHIP 2.7K 1/10W(1608)
R167	1-218-446-11	s	RESISTOR,CHIP 1 (1608)
R168	1-218-446-11	s	RESISTOR,CHIP 1 (1608)
R169	1-216-857-11	s	RESISTOR,CHIP 1M 1/10W(1608)
R170	1-211-985-11	s	RESISTOR,CHIP 47 1/10W (1608)
R171	1-218-847-11	s	RESISTOR, CHIP 1K 1/10W (1608)
R172	1-218-847-11	s	RESISTOR, CHIP 1K 1/10W (1608)
R173	1-216-864-11	s	CONDUCTOR, CHIP (1608)
R174	1-218-863-11	s	RESISTOR,CHIP 4.7K 1/10W(1608)
R175	1-218-868-11	s	RESISTOR,CHIP 7.5K 1/10W(1608)
R176	1-218-871-11	s	RESISTOR,CHIP 10K 1/10W (1608)
R177	1-218-855-11	s	RESISTOR,CHIP 2.2K 1/10W(1608)
R178	1-218-863-11	s	RESISTOR,CHIP 4.7K 1/10W(1608)
R179	1-218-892-11	s	RESISTOR,CHIP 75K 1/10W (1608)
R180	1-218-883-11	s	RESISTOR,CHIP 33K 1/10W (1608)
R181	1-218-881-11	s	RESISTOR, CHIP 27K 1/10W(1608)
R182	1-218-837-11	s	RESISTOR,CHIP 390 1/10W (1608)
R183	1-218-877-11	s	RESISTOR,CHIP 18K 1/10W (1608)
R184	1-218-859-11	s	RESISTOR,CHIP 3.3K 1/10W(1608)
R185	1-218-446-11	s	RESISTOR,CHIP 1 (1608)
R186	1-218-446-11	s	RESISTOR,CHIP 1 (1608)
R194	1-218-871-11	s	RESISTOR,CHIP 10K 1/10W (1608)
R195	1-218-871-11	s	RESISTOR,CHIP 10K 1/10W (1608)
R196	1-218-871-11	s	RESISTOR,CHIP 10K 1/10W (1608)
R197	1-218-871-11	s	RESISTOR,CHIP 10K 1/10W (1608)
R198	1-218-859-11	s	RESISTOR,CHIP 3.3K 1/10W(1608)
R199	1-211-977-11	s	RESISTOR,CHIP 22 1/10W (1608)
R201	1-218-831-11	s	RESISTOR, CHIP 220 1/10W(1608)
R202	1-218-847-11	s	RESISTOR, CHIP 1K 1/10W (1608)
R203	1-218-851-11	s	RESISTOR,CHIP 1.5K 1/10W(1608)
R204	1-218-865-11	s	RESISTOR,CHIP 5.6K 1/10W(1608)
R207	1-218-867-11	s	RESISTOR,CHIP 6.8K 1/10W(1608)
R214	1-218-871-11	s	RESISTOR,CHIP 10K 1/10W (1608)
R215	1-218-869-11	s	RESISTOR,CHIP 8.2K 1/10W(1608)
R216	1-218-823-11	s	RESISTOR,CHIP 100 1/10W (1608)
R217	1-218-855-11	s	RESISTOR,CHIP 2.2K 1/10W(1608)
R218	1-218-831-11	s	RESISTOR, CHIP 220 1/10W(1608)
R219	1-218-858-11	s	RESISTOR, CHIP 3K 1/10W (1608)
R221	1-218-823-11	s	RESISTOR,CHIP 100 1/10W (1608)
R222	1-218-858-11	s	RESISTOR, CHIP 3K 1/10W (1608)
R223	1-218-844-11	s	RESISTOR,CHIP 750 1/10W (1608)
R224	1-218-836-11	s	RESISTOR,CHIP 360 1/10W (1608)
R226	1-218-895-11	s	RESISTOR,CHIP 100K 1/10W(1608)
R227	1-218-859-11	s	RESISTOR,CHIP 3.3K 1/10W(1608)
R228	1-218-879-11	s	RESISTOR,CHIP 22K 1/10W (1608)
R229	1-218-895-11	s	RESISTOR,CHIP 100K 1/10W(1608)
R230	1-218-883-11	s	RESISTOR,CHIP 33K 1/10W (1608)
R231	1-218-876-11	s	RESISTOR,CHIP 16K 1/10W (1608)
R232	1-211-977-11	s	RESISTOR,CHIP 22 1/10W (1608)
R233	1-218-863-11	s	RESISTOR,CHIP 4.7K 1/10W(1608)
R234	1-211-985-11	s	RESISTOR,CHIP 47 1/10W (1608)
R235	1-218-871-11	s	RESISTOR,CHIP 10K 1/10W (1608)
R236	1-218-871-11	s	RESISTOR,CHIP 10K 1/10W (1608)
R237	1-211-985-11	s	RESISTOR,CHIP 47 1/10W (1608)
R238	1-211-977-11	s	RESISTOR,CHIP 22 1/10W (1608)
R239	1-218-871-11	s	RESISTOR,CHIP 10K 1/10W (1608)

(VPR-64 BOARD [SUFFIX 17-] for MSW RECORDER)

Ref. No. or Q'ty	Part No.	SP	Description
R243	1-216-864-11	s	CONDUCTOR, CHIP (1608)
R244	1-216-864-11	s	CONDUCTOR, CHIP (1608)
R245	1-218-895-11	s	RESISTOR,CHIP 100K 1/10W(1608)
R246	1-211-985-11	s	RESISTOR,CHIP 47 1/10W (1608)
R249	1-218-871-11	s	RESISTOR,CHIP 10K 1/10W (1608)
R250	1-218-871-11	s	RESISTOR,CHIP 10K 1/10W (1608)
R251	1-218-823-11	s	RESISTOR,CHIP 100 1/10W (1608)
R252	1-216-864-11	s	CONDUCTOR, CHIP (1608)
R254	1-218-847-11	s	RESISTOR, CHIP 1K 1/10W (1608)
R255	1-218-847-11	s	RESISTOR, CHIP 1K 1/10W (1608)
R256	1-218-847-11	s	RESISTOR, CHIP 1K 1/10W (1608)
R258	1-216-864-11	s	CONDUCTOR, CHIP (1608)
R259	1-218-855-11	s	RESISTOR,CHIP 2.2K 1/10W(1608)
R260	1-218-847-11	s	RESISTOR, CHIP 1K 1/10W (1608)
R262	1-216-864-11	s	CONDUCTOR, CHIP (1608)
R311	1-216-864-11	s	CONDUCTOR, CHIP (1608)
R315	1-218-895-11	s	RESISTOR,CHIP 100K 1/10W(1608)
R317	1-216-864-11	s	CONDUCTOR, CHIP (1608)
R318	1-216-864-11	s	CONDUCTOR, CHIP (1608)
R333	1-218-883-11	s	RESISTOR,CHIP 33K 1/10W (1608)
R335	1-218-879-11	s	RESISTOR,CHIP 22K 1/10W (1608)
R336	1-218-858-11	s	RESISTOR, CHIP 3K 1/10W (1608)
R339	1-216-861-11	s	RESISTOR,CHIP 2.2M 1/16W 1608
R340	1-218-875-11	s	RESISTOR,CHIP 15K 1/10W (1608)
R343	1-218-847-11	s	RESISTOR, CHIP 1K 1/10W (1608)
R344	1-218-873-11	s	RESISTOR,CHIP 12K 1/10W (1608)
R345	1-218-871-11	s	RESISTOR,CHIP 10K 1/10W (1608)
R346	1-218-847-11	s	RESISTOR, CHIP 1K 1/10W (1608)
R347	1-218-847-11	s	RESISTOR, CHIP 1K 1/10W (1608)
R348	1-218-847-11	s	RESISTOR, CHIP 1K 1/10W (1608)
R349	1-218-847-11	s	RESISTOR, CHIP 1K 1/10W (1608)
R350	1-218-847-11	s	RESISTOR, CHIP 1K 1/10W (1608)
R351	1-218-879-11	s	RESISTOR,CHIP 22K 1/10W (1608)
R352	1-218-883-11	s	RESISTOR,CHIP 33K 1/10W (1608)
R353	1-218-887-11	s	RESISTOR,CHIP 47K 1/10W (1608)
R354	1-218-887-11	s	RESISTOR,CHIP 47K 1/10W (1608)
R355	1-218-884-11	s	RESISTOR,CHIP 36K 1/10W (1608)
R356	1-218-875-11	s	RESISTOR,CHIP 15K 1/10W (1608)
R357	1-218-895-11	s	RESISTOR,CHIP 100K 1/10W(1608)
R358	1-218-823-11	s	RESISTOR,CHIP 100 1/10W (1608)
R359	1-218-895-11	s	RESISTOR,CHIP 100K 1/10W(1608)
R360	1-218-823-11	s	RESISTOR,CHIP 100 1/10W (1608)
R365	1-218-827-11	s	RESISTOR,CHIP 150 1/10W (1608)
R366	1-218-843-11	s	RESISTOR,CHIP 680 1/10W (1608)
R368	1-216-864-11	s	CONDUCTOR, CHIP (1608)
R377	1-216-864-11	s	CONDUCTOR, CHIP (1608)
R399	1-216-864-11	s	CONDUCTOR, CHIP (1608)
R407	1-218-855-11	s	RESISTOR,CHIP 2.2K 1/10W(1608)
R409	1-218-823-11	s	RESISTOR,CHIP 100 1/10W (1608)
R410	1-216-863-11	s	RESISTOR,CHIP 3.3M 1/16W 1608
R411	1-216-863-11	s	RESISTOR,CHIP 3.3M 1/16W 1608
R412	1-218-895-11	s	RESISTOR,CHIP 100K 1/10W(1608)
R414	1-218-855-11	s	RESISTOR,CHIP 2.2K 1/10W(1608)
R415	1-218-878-11	s	RESISTOR,CHIP 20K 1/10W (1608)
R416	1-218-878-11	s	RESISTOR,CHIP 20K 1/10W (1608)
R420	1-216-857-11	s	RESISTOR,CHIP 1M 1/10W(1608)
R421	1-218-855-11	s	RESISTOR,CHIP 2.2K 1/10W(1608)
R422	1-218-847-11	s	RESISTOR, CHIP 1K 1/10W (1608)
R423	1-218-823-11	s	RESISTOR,CHIP 100 1/10W (1608)

(VPR-64 BOARD [SUFFIX 17-] for MSW RECORDER)

Ref. No. or Q'ty	Part No.	SP	Description
R427	1-216-864-11	s	CONDUCTOR, CHIP (1608)
R428	1-216-864-11	s	CONDUCTOR, CHIP (1608)
R429	1-216-864-11	s	CONDUCTOR, CHIP (1608)
R430	1-216-864-11	s	CONDUCTOR, CHIP (1608)
R431	1-216-864-11	s	CONDUCTOR, CHIP (1608)
R432	1-216-864-11	s	CONDUCTOR, CHIP (1608)
R433	1-216-864-11	s	CONDUCTOR, CHIP (1608)
R435	1-216-864-11	s	CONDUCTOR, CHIP (1608)
R439	1-216-864-11	s	CONDUCTOR, CHIP (1608)
R440	1-216-864-11	s	CONDUCTOR, CHIP (1608)
R441	1-216-864-11	s	CONDUCTOR, CHIP (1608)
R443	1-218-879-11	s	RESISTOR,CHIP 22K 1/10W (1608)
R444	1-218-873-11	s	RESISTOR,CHIP 12K 1/10W (1608)
R445	1-218-871-11	s	RESISTOR,CHIP 10K 1/10W (1608)
R446	1-218-871-11	s	RESISTOR,CHIP 10K 1/10W (1608)
R447	1-218-831-11	s	RESISTOR, CHIP 220 1/10W(1608)
R449	1-211-985-11	s	RESISTOR,CHIP 47 1/10W (1608)
R450	1-218-823-11	s	RESISTOR,CHIP 100 1/10W (1608)
R453	1-218-823-11	s	RESISTOR,CHIP 100 1/10W (1608)
R454	1-218-823-11	s	RESISTOR,CHIP 100 1/10W (1608)
R500	1-218-823-11	s	RESISTOR,CHIP 100 1/10W (1608)
R501	1-218-863-11	s	RESISTOR,CHIP 4.7K 1/10W(1608)
R502	1-218-835-11	s	RESISTOR,CHIP 330 1/10W (1608)
R504	1-218-887-11	s	RESISTOR,CHIP 47K 1/10W (1608)
R505	1-211-990-11	s	RESISTOR,CHIP 75 1/10W (1608)
R506	1-211-990-11	s	RESISTOR,CHIP 75 1/10W (1608)
R507	1-211-990-11	s	RESISTOR,CHIP 75 1/10W (1608)
R508	1-218-849-11	s	RESISTOR,CHIP 1.2K 1/10W(1608)
R509	1-218-845-11	s	RESISTOR,CHIP 820 1/10W (1608)
R510	1-218-836-11	s	RESISTOR,CHIP 360 1/10W (1608)
R511	1-218-863-11	s	RESISTOR,CHIP 4.7K 1/10W(1608)
R512	1-218-836-11	s	RESISTOR,CHIP 360 1/10W (1608)
R513	1-218-863-11	s	RESISTOR,CHIP 4.7K 1/10W(1608)
R514	1-218-879-11	s	RESISTOR,CHIP 22K 1/10W (1608)
R515	1-218-846-11	s	RESISTOR,CHIP 910 1/10W (1608)
R516	1-218-846-11	s	RESISTOR,CHIP 910 1/10W (1608)
R517	1-218-847-11	s	RESISTOR, CHIP 1K 1/10W (1608)
R518	1-218-446-11	s	RESISTOR,CHIP 1 (1608)
R519	1-218-446-11	s	RESISTOR,CHIP 1 (1608)
R521	1-218-847-11	s	RESISTOR, CHIP 1K 1/10W (1608)
R522	1-218-835-11	s	RESISTOR,CHIP 330 1/10W (1608)
R523	1-218-839-11	s	RESISTOR,CHIP 470 1/10W (1608)
R524	1-218-839-11	s	RESISTOR,CHIP 470 1/10W (1608)
R525	1-218-871-11	s	RESISTOR,CHIP 10K 1/10W (1608)
R527	1-218-887-11	s	RESISTOR,CHIP 47K 1/10W (1608)
R528	1-218-887-11	s	RESISTOR,CHIP 47K 1/10W (1608)
R529	1-218-827-11	s	RESISTOR,CHIP 150 1/10W (1608)
R530	1-218-839-11	s	RESISTOR,CHIP 470 1/10W (1608)
R531	1-218-839-11	s	RESISTOR,CHIP 470 1/10W (1608)
R532	1-218-857-11	s	RESISTOR,CHIP 2.7K 1/10W(1608)
R533	1-218-827-11	s	RESISTOR,CHIP 150 1/10W (1608)
R534	1-218-839-11	s	RESISTOR,CHIP 470 1/10W (1608)
R535	1-218-839-11	s	RESISTOR,CHIP 470 1/10W (1608)
R536	1-218-863-11	s	RESISTOR,CHIP 4.7K 1/10W(1608)
R537	1-218-847-11	s	RESISTOR, CHIP 1K 1/10W (1608)
R538	1-218-851-11	s	RESISTOR,CHIP 1.5K 1/10W(1608)
R539	1-218-851-11	s	RESISTOR,CHIP 1.5K 1/10W(1608)
R540	1-211-969-11	s	RESISTOR,CHIP 10 1/10W (1608)
R541	1-211-969-11	s	RESISTOR,CHIP 10 1/10W (1608)

(VPR-64 BOARD [SUFFIX 17-] for MSW RECORDER)

Ref. No. or Q'ty	Part No.	SP	Description
R542	1-211-969-11	s	RESISTOR,CHIP 10 1/10W (1608)
R543	1-218-825-11	s	RESISTOR,CHIP 120 1/10W (1608)
R544	1-218-831-11	s	RESISTOR, CHIP 220 1/10W(1608)
R545	1-218-831-11	s	RESISTOR, CHIP 220 1/10W(1608)
R546	1-218-855-11	s	RESISTOR,CHIP 2.2K 1/10W(1608)
R547	1-218-871-11	s	RESISTOR,CHIP 10K 1/10W (1608)
R548	1-216-863-11	s	RESISTOR,CHIP 3.3M 1/16W 1608
R550	1-216-863-11	s	RESISTOR,CHIP 3.3M 1/16W 1608
R551	1-218-849-11	s	RESISTOR,CHIP 1.2K 1/10W(1608)
R552	1-218-831-11	s	RESISTOR, CHIP 220 1/10W(1608)
R553	1-218-851-11	s	RESISTOR,CHIP 1.5K 1/10W(1608)
R554	1-218-831-11	s	RESISTOR, CHIP 220 1/10W(1608)
R555	1-218-851-11	s	RESISTOR,CHIP 1.5K 1/10W(1608)
R556	1-218-831-11	s	RESISTOR, CHIP 220 1/10W(1608)
R557	1-218-823-11	s	RESISTOR,CHIP 100 1/10W (1608)
R558	1-218-823-11	s	RESISTOR,CHIP 100 1/10W (1608)
R559	1-218-823-11	s	RESISTOR,CHIP 100 1/10W (1608)
R560	1-218-863-11	s	RESISTOR,CHIP 4.7K 1/10W(1608)
R561	1-218-863-11	s	RESISTOR,CHIP 4.7K 1/10W(1608)
R562	1-218-863-11	s	RESISTOR,CHIP 4.7K 1/10W(1608)
R564	1-218-855-11	s	RESISTOR,CHIP 2.2K 1/10W(1608)
R565	1-218-847-11	s	RESISTOR, CHIP 1K 1/10W (1608)
R566	1-218-847-11	s	RESISTOR, CHIP 1K 1/10W (1608)
R567	1-218-847-11	s	RESISTOR, CHIP 1K 1/10W (1608)
R568	1-218-871-11	s	RESISTOR,CHIP 10K 1/10W (1608)
R569	1-216-857-11	s	RESISTOR,CHIP 1M 1/10W(1608)
R570	1-218-863-11	s	RESISTOR,CHIP 4.7K 1/10W(1608)
R571	1-218-847-11	s	RESISTOR, CHIP 1K 1/10W (1608)
R572	1-218-847-11	s	RESISTOR, CHIP 1K 1/10W (1608)
R573	1-218-857-11	s	RESISTOR,CHIP 2.7K 1/10W(1608)
R574	1-218-871-11	s	RESISTOR,CHIP 10K 1/10W (1608)
R575	1-218-839-11	s	RESISTOR,CHIP 470 1/10W (1608)
R576	1-218-863-11	s	RESISTOR,CHIP 4.7K 1/10W(1608)
R577	1-218-859-11	s	RESISTOR,CHIP 3.3K 1/10W(1608)
R578	1-218-863-11	s	RESISTOR,CHIP 4.7K 1/10W(1608)
R579	1-218-859-11	s	RESISTOR,CHIP 3.3K 1/10W(1608)
R580	1-216-857-11	s	RESISTOR,CHIP 1M 1/10W(1608)
R581	1-216-857-11	s	RESISTOR,CHIP 1M 1/10W(1608)
R582	1-216-857-11	s	RESISTOR,CHIP 1M 1/10W(1608)
R583	1-218-871-11	s	RESISTOR,CHIP 10K 1/10W (1608)
R584	1-218-871-11	s	RESISTOR,CHIP 10K 1/10W (1608)
R585	1-218-871-11	s	RESISTOR,CHIP 10K 1/10W (1608)
R586	1-218-839-11	s	RESISTOR,CHIP 470 1/10W (1608)
R587	1-218-843-11	s	RESISTOR,CHIP 680 1/10W (1608)
R588	1-218-839-11	s	RESISTOR,CHIP 470 1/10W (1608)
R589	1-218-839-11	s	RESISTOR,CHIP 470 1/10W (1608)
R590	1-218-839-11	s	RESISTOR,CHIP 470 1/10W (1608)
R591	1-211-985-11	s	RESISTOR,CHIP 47 1/10W (1608)
R592	1-211-985-11	s	RESISTOR,CHIP 47 1/10W (1608)
R593	1-211-985-11	s	RESISTOR,CHIP 47 1/10W (1608)
R594	1-218-446-11	s	RESISTOR,CHIP 1 (1608)
R595	1-218-446-11	s	RESISTOR,CHIP 1 (1608)
R596	1-218-839-11	s	RESISTOR,CHIP 470 1/10W (1608)
R597	1-211-985-11	s	RESISTOR,CHIP 47 1/10W (1608)
R598	1-218-879-11	s	RESISTOR,CHIP 22K 1/10W (1608)
R599	1-218-847-11	s	RESISTOR, CHIP 1K 1/10W (1608)
R600	1-218-847-11	s	RESISTOR, CHIP 1K 1/10W (1608)
R601	1-216-864-11	s	CONDUCTOR, CHIP (1608)
R602	1-218-871-11	s	RESISTOR,CHIP 10K 1/10W (1608)

(VPR-64 BOARD [SUFFIX 17-] for MSW RECORDER)

Ref. No. or Q'ty	Part No.	SP	Description
R603	1-218-855-11	s	RESISTOR,CHIP 2.2K 1/10W(1608)
R604	1-218-907-11	s	RESISTOR,CHIP 330K 1/10W(1608)
R605	1-218-892-11	s	RESISTOR,CHIP 75K 1/10W (1608)
R606	1-218-892-11	s	RESISTOR,CHIP 75K 1/10W (1608)
R607	1-218-907-11	s	RESISTOR,CHIP 330K 1/10W(1608)
R608	1-218-883-11	s	RESISTOR,CHIP 33K 1/10W (1608)
R609	1-218-873-11	s	RESISTOR,CHIP 12K 1/10W (1608)
R610	1-218-839-11	s	RESISTOR,CHIP 470 1/10W (1608)
R611	1-218-839-11	s	RESISTOR,CHIP 470 1/10W (1608)
R612	1-218-839-11	s	RESISTOR,CHIP 470 1/10W (1608)
R613	1-218-839-11	s	RESISTOR,CHIP 470 1/10W (1608)
R614	1-218-871-11	s	RESISTOR,CHIP 10K 1/10W (1608)
R615	1-218-871-11	s	RESISTOR,CHIP 10K 1/10W (1608)
R616	1-218-871-11	s	RESISTOR,CHIP 10K 1/10W (1608)
R617	1-218-871-11	s	RESISTOR,CHIP 10K 1/10W (1608)
R618	1-218-831-11	s	RESISTOR, CHIP 220 1/10W(1608)
R620	1-218-831-11	s	RESISTOR, CHIP 220 1/10W(1608)
R621	1-218-831-11	s	RESISTOR, CHIP 220 1/10W(1608)
R623	1-218-831-11	s	RESISTOR, CHIP 220 1/10W(1608)
R624	1-216-864-11	s	CONDUCTOR, CHIP (1608)
R625	1-216-864-11	s	CONDUCTOR, CHIP (1608)
R626	1-218-871-11	s	RESISTOR,CHIP 10K 1/10W (1608)
R627	1-218-839-11	s	RESISTOR,CHIP 470 1/10W (1608)
R628	1-218-871-11	s	RESISTOR,CHIP 10K 1/10W (1608)
R629	1-218-839-11	s	RESISTOR,CHIP 470 1/10W (1608)
R630	1-218-823-11	s	RESISTOR,CHIP 100 1/10W (1608)
R631	1-218-823-11	s	RESISTOR,CHIP 100 1/10W (1608)
R632	1-218-861-11	s	RESISTOR,CHIP 3.9K 1/10W(1608)
R633	1-218-871-11	s	RESISTOR,CHIP 10K 1/10W (1608)
R634	1-218-891-11	s	RESISTOR,CHIP 68K 1/10W (1608)
R635	1-218-855-11	s	RESISTOR,CHIP 2.2K 1/10W(1608)
R636	1-218-882-11	s	RESISTOR, CHIP 30K 1/10W(1608)
R637	1-218-879-11	s	RESISTOR,CHIP 22K 1/10W (1608)
R638	1-218-873-11	s	RESISTOR,CHIP 12K 1/10W (1608)
R639	1-218-871-11	s	RESISTOR,CHIP 10K 1/10W (1608)
R640	1-218-871-11	s	RESISTOR,CHIP 10K 1/10W (1608)
R641	1-218-831-11	s	RESISTOR, CHIP 220 1/10W(1608)
R643	1-218-831-11	s	RESISTOR, CHIP 220 1/10W(1608)
R644	1-211-991-11	s	RESISTOR,CHIP 82 1/10W (1608)
R645	1-218-823-11	s	RESISTOR,CHIP 100 1/10W (1608)
R646	1-218-823-11	s	RESISTOR,CHIP 100 1/10W (1608)
R651	1-218-446-11	s	RESISTOR,CHIP 1 (1608)
R652	1-218-446-11	s	RESISTOR,CHIP 1 (1608)
R654	1-218-446-11	s	RESISTOR,CHIP 1 (1608)
R655	1-218-446-11	s	RESISTOR,CHIP 1 (1608)
R656	1-218-446-11	s	RESISTOR,CHIP 1 (1608)
R657	1-218-446-11	s	RESISTOR,CHIP 1 (1608)
R658	1-218-446-11	s	RESISTOR,CHIP 1 (1608)
R659	1-218-446-11	s	RESISTOR,CHIP 1 (1608)
R700	1-218-831-11	s	RESISTOR, CHIP 220 1/10W(1608)
R701	1-218-823-11	s	RESISTOR,CHIP 100 1/10W (1608)
R703	1-218-871-11	s	RESISTOR,CHIP 10K 1/10W (1608)
R706	1-218-895-11	s	RESISTOR,CHIP 100K 1/10W(1608)
R708	1-218-823-11	s	RESISTOR,CHIP 100 1/10W (1608)
R711	1-218-895-11	s	RESISTOR,CHIP 100K 1/10W(1608)
R712	1-218-895-11	s	RESISTOR,CHIP 100K 1/10W(1608)
R713	1-218-895-11	s	RESISTOR,CHIP 100K 1/10W(1608)
R727	1-218-871-11	s	RESISTOR,CHIP 10K 1/10W (1608)
R729	1-216-864-11	s	CONDUCTOR, CHIP (1608)

(VPR-64 BOARD [SUFFIX 17-] for MSW RECORDER)

Ref. No. or Q'ty	Part No.	SP	Description
R733	1-218-863-11	s	RESISTOR,CHIP 4.7K 1/10W(1608)
R734	1-218-835-11	s	RESISTOR,CHIP 330 1/10W (1608)
R735	1-218-863-11	s	RESISTOR,CHIP 4.7K 1/10W(1608)
R736	1-218-863-11	s	RESISTOR,CHIP 4.7K 1/10W(1608)
R741	1-218-823-11	s	RESISTOR,CHIP 100 1/10W (1608)
R742	1-218-823-11	s	RESISTOR,CHIP 100 1/10W (1608)
R743	1-216-864-11	s	CONDUCTOR, CHIP (1608)
R752	1-216-864-11	s	CONDUCTOR, CHIP (1608)
R753	1-211-985-11	s	RESISTOR,CHIP 47 1/10W (1608)
R754	1-211-985-11	s	RESISTOR,CHIP 47 1/10W (1608)
R755	1-211-985-11	s	RESISTOR,CHIP 47 1/10W (1608)
R800	1-218-871-11	s	RESISTOR,CHIP 10K 1/10W (1608)
R801	1-218-871-11	s	RESISTOR,CHIP 10K 1/10W (1608)
R802	1-218-834-11	s	RESISTOR,CHIP 300 1/10W (1608)
R803	1-218-871-11	s	RESISTOR,CHIP 10K 1/10W (1608)
R804	1-218-871-11	s	RESISTOR,CHIP 10K 1/10W (1608)
R805	1-218-871-11	s	RESISTOR,CHIP 10K 1/10W (1608)
R806	1-211-985-11	s	RESISTOR,CHIP 47 1/10W (1608)
R807	1-218-831-11	s	RESISTOR, CHIP 220 1/10W(1608)
R908	1-218-878-11	s	RESISTOR,CHIP 20K 1/10W (1608)
R909	1-218-876-11	s	RESISTOR,CHIP 16K 1/10W (1608)
R910	1-218-878-11	s	RESISTOR,CHIP 20K 1/10W (1608)
R911	1-218-876-11	s	RESISTOR,CHIP 16K 1/10W (1608)
R912	1-218-887-11	s	RESISTOR,CHIP 47K 1/10W (1608)
R913	1-218-878-11	s	RESISTOR,CHIP 20K 1/10W (1608)
R914	1-218-876-11	s	RESISTOR,CHIP 16K 1/10W (1608)
R915	1-218-895-11	s	RESISTOR,CHIP 100K 1/10W(1608)
R916	1-216-864-11	s	CONDUCTOR, CHIP (1608)
R921	1-216-864-11	s	CONDUCTOR, CHIP (1608)
R924	1-218-823-11	s	RESISTOR,CHIP 100 1/10W (1608)
R925	1-218-823-11	s	RESISTOR,CHIP 100 1/10W (1608)
R926	1-218-823-11	s	RESISTOR,CHIP 100 1/10W (1608)
R927	1-218-823-11	s	RESISTOR,CHIP 100 1/10W (1608)
R932	1-218-857-11	s	RESISTOR,CHIP 2.7K 1/10W(1608)
R933	1-218-857-11	s	RESISTOR,CHIP 2.7K 1/10W(1608)
R934	1-218-857-11	s	RESISTOR,CHIP 2.7K 1/10W(1608)
R935	1-218-823-11	s	RESISTOR,CHIP 100 1/10W (1608)
R938	1-216-864-11	s	CONDUCTOR, CHIP (1608)
R939	1-216-864-11	s	CONDUCTOR, CHIP (1608)
R953	1-218-871-11	s	RESISTOR,CHIP 10K 1/10W (1608)
R954	1-218-871-11	s	RESISTOR,CHIP 10K 1/10W (1608)
R955	1-218-911-11	s	RESISTOR,CHIP 470K 1/10W(1608)
R956	1-218-863-11	s	RESISTOR,CHIP 4.7K 1/10W(1608)
R957	1-211-977-11	s	RESISTOR,CHIP 22 1/10W (1608)
R960	1-218-871-11	s	RESISTOR,CHIP 10K 1/10W (1608)
R961	1-218-849-11	s	RESISTOR,CHIP 1.2K 1/10W(1608)
R962	1-218-883-11	s	RESISTOR,CHIP 33K 1/10W (1608)
R963	1-218-875-11	s	RESISTOR,CHIP 15K 1/10W (1608)
R964	1-218-876-11	s	RESISTOR,CHIP 16K 1/10W (1608)
R965	1-216-857-11	s	RESISTOR,CHIP 1M 1/10W(1608)
R966	1-218-883-11	s	RESISTOR,CHIP 33K 1/10W (1608)
R967	1-218-875-11	s	RESISTOR,CHIP 15K 1/10W (1608)
R968	1-218-876-11	s	RESISTOR,CHIP 16K 1/10W (1608)
R969	1-218-892-11	s	RESISTOR,CHIP 75K 1/10W (1608)
R970	1-218-875-11	s	RESISTOR,CHIP 15K 1/10W (1608)
R971	1-218-874-11	s	RESISTOR,CHIP 13K 1/10W (1608)
R972	1-218-823-11	s	RESISTOR,CHIP 100 1/10W (1608)
R973	1-218-823-11	s	RESISTOR,CHIP 100 1/10W (1608)
R974	1-218-823-11	s	RESISTOR,CHIP 100 1/10W (1608)

(VPR-64 BOARD [SUFFIX 17-] for MSW RECORDER)

Ref. No. or Q'ty	Part No.	SP	Description
R975	1-218-853-11	s	RESISTOR,CHIP 1.8K 1/10W(1608)
R976	1-218-853-11	s	RESISTOR,CHIP 1.8K 1/10W(1608)
R977	1-218-849-11	s	RESISTOR,CHIP 1.2K 1/10W(1608)
R979	1-218-835-11	s	RESISTOR,CHIP 330 1/10W (1608)
R980	1-218-863-11	s	RESISTOR,CHIP 4.7K 1/10W(1608)
R981	1-218-823-11	s	RESISTOR,CHIP 100 1/10W (1608)
R982	1-218-827-11	s	RESISTOR,CHIP 150 1/10W (1608)
R983	1-218-827-11	s	RESISTOR,CHIP 150 1/10W (1608)
R984	1-218-827-11	s	RESISTOR,CHIP 150 1/10W (1608)
R985	1-218-827-11	s	RESISTOR,CHIP 150 1/10W (1608)
R986	1-218-827-11	s	RESISTOR,CHIP 150 1/10W (1608)
R987	1-218-827-11	s	RESISTOR,CHIP 150 1/10W (1608)
R988	1-218-827-11	s	RESISTOR,CHIP 150 1/10W (1608)
R989	1-218-827-11	s	RESISTOR,CHIP 150 1/10W (1608)
R990	1-211-975-11	s	RESISTOR,CHIP 18 1/10W (1608)
R991	1-211-991-11	s	RESISTOR,CHIP 82 1/10W (1608)
R992	1-211-973-11	s	RESISTOR,CHIP 15 1/10W (1608)
R993	1-211-973-11	s	RESISTOR,CHIP 15 1/10W (1608)
R994	1-211-975-11	s	RESISTOR,CHIP 18 1/10W (1608)
R995	1-211-991-11	s	RESISTOR,CHIP 82 1/10W (1608)
R996	1-218-853-11	s	RESISTOR,CHIP 1.8K 1/10W(1608)
R997	1-218-850-11	s	RESISTOR,CHIP 1.3K 1/10W(1608)
R998	1-218-850-11	s	RESISTOR,CHIP 1.3K 1/10W(1608)
R999	1-218-853-11	s	RESISTOR,CHIP 1.8K 1/10W(1608)
R1000	1-218-827-11	s	RESISTOR,CHIP 150 1/10W (1608)
R1001	1-218-827-11	s	RESISTOR,CHIP 150 1/10W (1608)
R1002	1-218-827-11	s	RESISTOR,CHIP 150 1/10W (1608)
R1003	1-218-827-11	s	RESISTOR,CHIP 150 1/10W (1608)
R1004	1-218-827-11	s	RESISTOR,CHIP 150 1/10W (1608)
R1005	1-218-827-11	s	RESISTOR,CHIP 150 1/10W (1608)
R1006	1-218-827-11	s	RESISTOR,CHIP 150 1/10W (1608)
R1007	1-218-827-11	s	RESISTOR,CHIP 150 1/10W (1608)
R1008	1-218-863-11	s	RESISTOR,CHIP 4.7K 1/10W(1608)
R1009	1-218-871-11	s	RESISTOR,CHIP 10K 1/10W (1608)
R1010	1-218-863-11	s	RESISTOR,CHIP 4.7K 1/10W(1608)
R1011	1-218-885-11	s	RESISTOR,CHIP 39K 1/10W (1608)
R1012	1-218-863-11	s	RESISTOR,CHIP 4.7K 1/10W(1608)
R1013	1-218-885-11	s	RESISTOR,CHIP 39K 1/10W (1608)
R1014	1-218-863-11	s	RESISTOR,CHIP 4.7K 1/10W(1608)
R1015	1-218-871-11	s	RESISTOR,CHIP 10K 1/10W (1608)
R1016	1-218-858-11	s	RESISTOR, CHIP 3K 1/10W (1608)
R1017	1-218-858-11	s	RESISTOR, CHIP 3K 1/10W (1608)
R1018	1-218-858-11	s	RESISTOR, CHIP 3K 1/10W (1608)
R1019	1-218-849-11	s	RESISTOR,CHIP 1.2K 1/10W(1608)
R1020	1-218-849-11	s	RESISTOR,CHIP 1.2K 1/10W(1608)
R1021	1-218-849-11	s	RESISTOR,CHIP 1.2K 1/10W(1608)
R1022	1-218-849-11	s	RESISTOR,CHIP 1.2K 1/10W(1608)
R1023	1-218-855-11	s	RESISTOR,CHIP 2.2K 1/10W(1608)
R1024	1-216-863-11	s	RESISTOR,CHIP 3.3M 1/16W 1608
R1025	1-216-863-11	s	RESISTOR,CHIP 3.3M 1/16W 1608
R1026	1-216-863-11	s	RESISTOR,CHIP 3.3M 1/16W 1608
R1027	1-216-863-11	s	RESISTOR,CHIP 3.3M 1/16W 1608
R1028	1-218-881-11	s	RESISTOR, CHIP 27K 1/10W(1608)
R1029	1-218-847-11	s	RESISTOR, CHIP 1K 1/10W (1608)
R1030	1-218-867-11	s	RESISTOR,CHIP 6.8K 1/10W(1608)
R1031	1-218-847-11	s	RESISTOR, CHIP 1K 1/10W (1608)
R1032	1-218-867-11	s	RESISTOR,CHIP 6.8K 1/10W(1608)
R1033	1-218-847-11	s	RESISTOR, CHIP 1K 1/10W (1608)
R1034	1-218-867-11	s	RESISTOR,CHIP 6.8K 1/10W(1608)

(VPR-64 BOARD [SUFFIX 17-] for MSW RECORDER)

Ref. No. or Q'ty	Part No.	SP	Description
R1035	1-218-847-11	s	RESISTOR, CHIP 1K 1/10W (1608)
R1036	1-218-867-11	s	RESISTOR,CHIP 6.8K 1/10W(1608)
R1037	1-218-875-11	s	RESISTOR,CHIP 15K 1/10W (1608)
R1039	1-218-849-11	s	RESISTOR,CHIP 1.2K 1/10W(1608)
R1040	1-218-863-11	s	RESISTOR,CHIP 4.7K 1/10W(1608)
R1041	1-218-847-11	s	RESISTOR, CHIP 1K 1/10W (1608)
R1042	1-218-847-11	s	RESISTOR, CHIP 1K 1/10W (1608)
R1043	1-218-847-11	s	RESISTOR, CHIP 1K 1/10W (1608)
R1044	1-218-847-11	s	RESISTOR, CHIP 1K 1/10W (1608)
R1045	1-218-847-11	s	RESISTOR, CHIP 1K 1/10W (1608)
R1046	1-218-854-11	s	RESISTOR,CHIP 2K 1/10W (1608)
R1047	1-218-854-11	s	RESISTOR,CHIP 2K 1/10W (1608)
R1048	1-218-859-11	s	RESISTOR,CHIP 3.3K 1/10W(1608)
R1049	1-218-857-11	s	RESISTOR,CHIP 2.7K 1/10W(1608)
R1050	1-218-857-11	s	RESISTOR,CHIP 2.7K 1/10W(1608)
R1051	1-218-857-11	s	RESISTOR,CHIP 2.7K 1/10W(1608)
R1052	1-218-847-11	s	RESISTOR, CHIP 1K 1/10W (1608)
R1053	1-218-847-11	s	RESISTOR, CHIP 1K 1/10W (1608)
R1054	1-218-847-11	s	RESISTOR, CHIP 1K 1/10W (1608)
R1055	1-218-854-11	s	RESISTOR,CHIP 2K 1/10W (1608)
R1056	1-218-854-11	s	RESISTOR,CHIP 2K 1/10W (1608)
R1057	1-218-854-11	s	RESISTOR,CHIP 2K 1/10W (1608)
R1058	1-218-854-11	s	RESISTOR,CHIP 2K 1/10W (1608)
R1061	1-211-990-11	s	RESISTOR,CHIP 75 1/10W (1608)
R1062	1-211-990-11	s	RESISTOR,CHIP 75 1/10W (1608)
R1063	1-211-990-11	s	RESISTOR,CHIP 75 1/10W (1608)
R1064	1-211-990-11	s	RESISTOR,CHIP 75 1/10W (1608)
R1065	1-211-990-11	s	RESISTOR,CHIP 75 1/10W (1608)
R1066	1-211-990-11	s	RESISTOR,CHIP 75 1/10W (1608)
R1069	1-218-823-11	s	RESISTOR,CHIP 100 1/10W (1608)
R1070	1-218-823-11	s	RESISTOR,CHIP 100 1/10W (1608)
R1072	1-211-985-11	s	RESISTOR,CHIP 47 1/10W (1608)
R1073	1-211-985-11	s	RESISTOR,CHIP 47 1/10W (1608)
R1074	1-218-823-11	s	RESISTOR,CHIP 100 1/10W (1608)
R1075	1-218-823-11	s	RESISTOR,CHIP 100 1/10W (1608)
R1076	1-218-823-11	s	RESISTOR,CHIP 100 1/10W (1608)
R1077	1-218-863-11	s	RESISTOR,CHIP 4.7K 1/10W(1608)
R1079	1-216-864-11	s	CONDUCTOR, CHIP (1608)
R1080	1-218-871-11	s	RESISTOR,CHIP 10K 1/10W (1608)
R1081	1-218-871-11	s	RESISTOR,CHIP 10K 1/10W (1608)
R1082	1-218-895-11	s	RESISTOR,CHIP 100K 1/10W(1608)
R1083	1-218-871-11	s	RESISTOR,CHIP 10K 1/10W (1608)
R1084	1-218-871-11	s	RESISTOR,CHIP 10K 1/10W (1608)
R1085	1-218-871-11	s	RESISTOR,CHIP 10K 1/10W (1608)
R1086	1-218-871-11	s	RESISTOR,CHIP 10K 1/10W (1608)
R1087	1-218-871-11	s	RESISTOR,CHIP 10K 1/10W (1608)
R1088	1-218-871-11	s	RESISTOR,CHIP 10K 1/10W (1608)
R1089	1-218-871-11	s	RESISTOR,CHIP 10K 1/10W (1608)
R1090	1-218-871-11	s	RESISTOR,CHIP 10K 1/10W (1608)
R1091	1-218-847-11	s	RESISTOR, CHIP 1K 1/10W (1608)
R1102	1-218-847-11	s	RESISTOR, CHIP 1K 1/10W (1608)
R1103	1-211-985-11	s	RESISTOR,CHIP 47 1/10W (1608)
R1104	1-218-845-11	s	RESISTOR,CHIP 820 1/10W (1608)
R1105	1-218-847-11	s	RESISTOR, CHIP 1K 1/10W (1608)
R1106	1-218-847-11	s	RESISTOR, CHIP 1K 1/10W (1608)
R1107	1-218-857-11	s	RESISTOR,CHIP 2.7K 1/10W(1608)
R1108	1-218-831-11	s	RESISTOR, CHIP 220 1/10W(1608)
R1109	1-218-871-11	s	RESISTOR,CHIP 10K 1/10W (1608)
R1110	1-218-855-11	s	RESISTOR,CHIP 2.2K 1/10W(1608)

(VPR-64 BOARD [SUFFIX 17-] for MSW RECORDER)

Ref. No. or Q'ty	Part No.	SP	Description
R1111	1-218-871-11	s	RESISTOR,CHIP 10K 1/10W (1608)
R1112	1-216-863-11	s	RESISTOR,CHIP 3.3M 1/16W 1608
R1113	1-216-863-11	s	RESISTOR,CHIP 3.3M 1/16W 1608
R1114	1-218-855-11	s	RESISTOR,CHIP 2.2K 1/10W(1608)
R1115	1-218-871-11	s	RESISTOR,CHIP 10K 1/10W (1608)
R1116	1-216-857-11	s	RESISTOR,CHIP 1M 1/10W(1608)
R1117	1-218-857-11	s	RESISTOR,CHIP 2.7K 1/10W(1608)
R1118	1-218-854-11	s	RESISTOR,CHIP 2K 1/10W (1608)
R1119	1-218-859-11	s	RESISTOR,CHIP 3.3K 1/10W(1608)
R1120	1-218-847-11	s	RESISTOR, CHIP 1K 1/10W (1608)
R1121	1-218-855-11	s	RESISTOR,CHIP 2.2K 1/10W(1608)
R1122	1-218-863-11	s	RESISTOR,CHIP 4.7K 1/10W(1608)
R1124	1-218-847-11	s	RESISTOR, CHIP 1K 1/10W (1608)
R1126	1-218-847-11	s	RESISTOR, CHIP 1K 1/10W (1608)
R1127	1-218-849-11	s	RESISTOR,CHIP 1.2K 1/10W(1608)
R1129	1-218-879-11	s	RESISTOR,CHIP 22K 1/10W (1608)
R1130	1-218-863-11	s	RESISTOR,CHIP 4.7K 1/10W(1608)
R1132	1-218-863-11	s	RESISTOR,CHIP 4.7K 1/10W(1608)
R1135	1-218-823-11	s	RESISTOR,CHIP 100 1/10W (1608)
R1136	1-218-823-11	s	RESISTOR,CHIP 100 1/10W (1608)
R1138	1-218-823-11	s	RESISTOR,CHIP 100 1/10W (1608)
R1139	1-218-847-11	s	RESISTOR, CHIP 1K 1/10W (1608)
R1140	1-218-847-11	s	RESISTOR, CHIP 1K 1/10W (1608)
R1141	1-218-847-11	s	RESISTOR, CHIP 1K 1/10W (1608)
R1142	1-218-847-11	s	RESISTOR, CHIP 1K 1/10W (1608)
R1143	1-211-977-11	s	RESISTOR,CHIP 22 1/10W (1608)
R1144	1-211-977-11	s	RESISTOR,CHIP 22 1/10W (1608)
R1145	1-211-977-11	s	RESISTOR,CHIP 22 1/10W (1608)
R1146	1-211-977-11	s	RESISTOR,CHIP 22 1/10W (1608)
R1148	1-218-823-11	s	RESISTOR,CHIP 100 1/10W (1608)
R1149	1-218-871-11	s	RESISTOR,CHIP 10K 1/10W (1608)
R1150	1-218-871-11	s	RESISTOR,CHIP 10K 1/10W (1608)
R1153	1-218-871-11	s	RESISTOR,CHIP 10K 1/10W (1608)
R1154	1-218-847-11	s	RESISTOR, CHIP 1K 1/10W (1608)
R1155	1-218-847-11	s	RESISTOR, CHIP 1K 1/10W (1608)
R1156	1-218-847-11	s	RESISTOR, CHIP 1K 1/10W (1608)
R1157	1-216-864-11	s	CONDUCTOR, CHIP (1608)
R1161	1-218-871-11	s	RESISTOR,CHIP 10K 1/10W (1608)
R1200	1-218-833-11	s	RESISTOR,CHIP 270 1/10W (1608)
R1201	1-218-865-11	s	RESISTOR,CHIP 5.6K 1/10W(1608)
R1202	1-218-865-11	s	RESISTOR,CHIP 5.6K 1/10W(1608)
R1203	1-218-855-11	s	RESISTOR,CHIP 2.2K 1/10W(1608)
R1204	1-218-864-11	s	RESISTOR,CHIP 5.1K 1/10W(1608)
R1209	1-218-857-11	s	RESISTOR,CHIP 2.7K 1/10W(1608)
R1210	1-216-864-11	s	CONDUCTOR, CHIP (1608)
R1211	1-216-864-11	s	CONDUCTOR, CHIP (1608)
R1212	1-216-864-11	s	CONDUCTOR, CHIP (1608)
R1213	1-218-863-11	s	RESISTOR,CHIP 4.7K 1/10W(1608)
R1214	1-216-864-11	s	CONDUCTOR, CHIP (1608)
R1215	1-216-864-11	s	CONDUCTOR, CHIP (1608)
R1216	1-216-864-11	s	CONDUCTOR, CHIP (1608)
R1217	1-216-864-11	s	CONDUCTOR, CHIP (1608)
R1218	1-216-864-11	s	CONDUCTOR, CHIP (1608)
R1219	1-216-864-11	s	CONDUCTOR, CHIP (1608)
R1220	1-216-864-11	s	CONDUCTOR, CHIP (1608)
R1221	1-216-864-11	s	CONDUCTOR, CHIP (1608)
R1222	1-216-864-11	s	CONDUCTOR, CHIP (1608)
R1226	1-211-985-11	s	RESISTOR,CHIP 47 1/10W (1608)
R1227	1-218-839-11	s	RESISTOR,CHIP 470 1/10W (1608)

(VPR-64 BOARD [SUFFIX 17-] for MSW RECORDER)

Ref. No. or Q'ty	Part No.	SP	Description
R1231	1-218-871-11	s	RESISTOR,CHIP 10K 1/10W (1608)
R1232	1-218-871-11	s	RESISTOR,CHIP 10K 1/10W (1608)
R1236	1-218-889-11	s	RESISTOR,CHIP 56K 1/10W(1608)
R1237	1-216-864-11	s	CONDUCTOR, CHIP (1608)
R1238	1-218-839-11	s	RESISTOR,CHIP 470 1/10W (1608)
R1239	1-216-857-11	s	RESISTOR,CHIP 1M 1/10W(1608)
R1240	1-216-857-11	s	RESISTOR,CHIP 1M 1/10W(1608)
R1242	1-218-871-11	s	RESISTOR,CHIP 10K 1/10W (1608)
R1243	1-218-895-11	s	RESISTOR,CHIP 100K 1/10W(1608)
R1245	1-218-893-11	s	RESISTOR, CHIP 82K 1/10W(1608)
R1246	1-218-879-11	s	RESISTOR,CHIP 22K 1/10W (1608)
R1247	1-218-879-11	s	RESISTOR,CHIP 22K 1/10W (1608)
R1248	1-218-823-11	s	RESISTOR,CHIP 100 1/10W (1608)
R1249	1-220-800-91	s	RESISTOR, CHIP 1.5M (1608)
R1250	1-218-823-11	s	RESISTOR,CHIP 100 1/10W (1608)
R1252	1-218-887-11	s	RESISTOR,CHIP 47K 1/10W (1608)
R1253	1-218-847-11	s	RESISTOR, CHIP 1K 1/10W (1608)
R1254	1-218-861-11	s	RESISTOR,CHIP 3.9K 1/10W(1608)
R1255	1-216-864-11	s	CONDUCTOR, CHIP (1608)
R1256	1-218-911-11	s	RESISTOR,CHIP 470K 1/10W(1608)
R1257	1-218-878-11	s	RESISTOR,CHIP 20K 1/10W (1608)
R1258	1-218-855-11	s	RESISTOR,CHIP 2.2K 1/10W(1608)
R1259	1-218-847-11	s	RESISTOR, CHIP 1K 1/10W (1608)
R1260	1-218-882-11	s	RESISTOR, CHIP 30K 1/10W(1608)
R1261	1-218-839-11	s	RESISTOR,CHIP 470 1/10W (1608)
R1262	1-218-845-11	s	RESISTOR,CHIP 820 1/10W (1608)
R1263	1-216-857-11	s	RESISTOR,CHIP 1M 1/10W(1608)
R1264	1-211-985-11	s	RESISTOR,CHIP 47 1/10W (1608)
R1266	1-218-847-11	s	RESISTOR, CHIP 1K 1/10W (1608)
R1267	1-218-839-11	s	RESISTOR,CHIP 470 1/10W (1608)
R1269	1-218-871-11	s	RESISTOR,CHIP 10K 1/10W (1608)
R1270	1-218-871-11	s	RESISTOR,CHIP 10K 1/10W (1608)
R1271	1-218-871-11	s	RESISTOR,CHIP 10K 1/10W (1608)
R1272	1-218-883-11	s	RESISTOR,CHIP 33K 1/10W (1608)
R1274	1-218-891-11	s	RESISTOR,CHIP 68K 1/10W (1608)
R1275	1-218-839-11	s	RESISTOR,CHIP 470 1/10W (1608)
R1276	1-218-847-11	s	RESISTOR, CHIP 1K 1/10W (1608)
R1277	1-218-847-11	s	RESISTOR, CHIP 1K 1/10W (1608)
R1278	1-218-871-11	s	RESISTOR,CHIP 10K 1/10W (1608)
R1279	1-218-871-11	s	RESISTOR,CHIP 10K 1/10W (1608)
R1280	1-218-863-11	s	RESISTOR,CHIP 4.7K 1/10W(1608)
R1281	1-218-881-11	s	RESISTOR, CHIP 27K 1/10W(1608)
R1282	1-211-985-11	s	RESISTOR,CHIP 47 1/10W (1608)
R1283	1-211-985-11	s	RESISTOR,CHIP 47 1/10W (1608)
R1284	1-218-855-11	s	RESISTOR,CHIP 2.2K 1/10W(1608)
R1285	1-218-868-11	s	RESISTOR,CHIP 7.5K 1/10W(1608)
R1286	1-218-867-11	s	RESISTOR,CHIP 6.8K 1/10W(1608)
R1287	1-218-874-11	s	RESISTOR,CHIP 13K 1/10W (1608)
R1288	1-218-823-11	s	RESISTOR,CHIP 100 1/10W (1608)
R1289	1-218-885-11	s	RESISTOR,CHIP 39K 1/10W (1608)
R1290	1-218-839-11	s	RESISTOR,CHIP 470 1/10W (1608)
R1291	1-218-855-11	s	RESISTOR,CHIP 2.2K 1/10W(1608)
R1292	1-211-985-11	s	RESISTOR,CHIP 47 1/10W (1608)
R1293	1-218-895-11	s	RESISTOR,CHIP 100K 1/10W(1608)
R1294	1-218-871-11	s	RESISTOR,CHIP 10K 1/10W (1608)
R1295	1-218-895-11	s	RESISTOR,CHIP 100K 1/10W(1608)
R1296	1-218-879-11	s	RESISTOR,CHIP 22K 1/10W (1608)
R1297	1-218-877-11	s	RESISTOR,CHIP 18K 1/10W (1608)
R1298	1-218-847-11	s	RESISTOR, CHIP 1K 1/10W (1608)

(VPR-64 BOARD [SUFFIX 17-] for MSW RECORDER)

Ref. No. or Q'ty	Part No.	SP	Description
R1299	1-218-871-11	s	RESISTOR,CHIP 10K 1/10W (1608)
R1300	1-218-874-11	s	RESISTOR,CHIP 13K 1/10W (1608)
R1301	1-218-871-11	s	RESISTOR,CHIP 10K 1/10W (1608)
R1302	1-218-895-11	s	RESISTOR,CHIP 100K 1/10W(1608)
R1305	1-218-823-11	s	RESISTOR,CHIP 100 1/10W (1608)
R1310	1-218-878-11	s	RESISTOR,CHIP 20K 1/10W (1608)
R1311	1-218-878-11	s	RESISTOR,CHIP 20K 1/10W (1608)
R1312	1-218-844-11	s	RESISTOR,CHIP 750 1/10W (1608)
R1313	1-218-844-11	s	RESISTOR,CHIP 750 1/10W (1608)
R1314	1-216-857-11	s	RESISTOR,CHIP 1M 1/10W(1608)
R1315	1-218-823-11	s	RESISTOR,CHIP 100 1/10W (1608)
R1316	1-218-823-11	s	RESISTOR,CHIP 100 1/10W (1608)
R1317	1-218-823-11	s	RESISTOR,CHIP 100 1/10W (1608)
R1318	1-218-823-11	s	RESISTOR,CHIP 100 1/10W (1608)
R1319	1-218-823-11	s	RESISTOR,CHIP 100 1/10W (1608)
R1320	1-218-823-11	s	RESISTOR,CHIP 100 1/10W (1608)
R1321	1-218-823-11	s	RESISTOR,CHIP 100 1/10W (1608)
R1322	1-218-823-11	s	RESISTOR,CHIP 100 1/10W (1608)
R1323	1-218-823-11	s	RESISTOR,CHIP 100 1/10W (1608)
R1324	1-218-823-11	s	RESISTOR,CHIP 100 1/10W (1608)
R1325	1-218-894-11	s	RESISTOR,CHIP 91K 1/10W (1608)
R1326	1-218-894-11	s	RESISTOR,CHIP 91K 1/10W (1608)
R1327	1-218-871-11	s	RESISTOR,CHIP 10K 1/10W (1608)
R1328	1-218-871-11	s	RESISTOR,CHIP 10K 1/10W (1608)
R1329	1-218-823-11	s	RESISTOR,CHIP 100 1/10W (1608)
R1330	1-218-871-11	s	RESISTOR,CHIP 10K 1/10W (1608)
R1331	1-218-879-11	s	RESISTOR,CHIP 22K 1/10W (1608)
R1332	1-218-823-11	s	RESISTOR,CHIP 100 1/10W (1608)
R1333	1-218-823-11	s	RESISTOR,CHIP 100 1/10W (1608)
R1334	1-218-823-11	s	RESISTOR,CHIP 100 1/10W (1608)
R1336	1-216-864-11	s	CONDUCTOR, CHIP (1608)
R1337	1-211-977-11	s	RESISTOR,CHIP 22 1/10W (1608)
R1338	1-218-871-11	s	RESISTOR,CHIP 10K 1/10W (1608)
R1339	1-218-871-11	s	RESISTOR,CHIP 10K 1/10W (1608)
R1340	1-218-848-11	s	RESISTOR,CHIP 1.1K 1/10W(1608)
R1343	1-216-864-11	s	CONDUCTOR, CHIP (1608)
R1344	1-216-864-11	s	CONDUCTOR, CHIP (1608)
R1345	1-218-839-11	s	RESISTOR,CHIP 470 1/10W (1608)
R1346	1-218-890-11	s	RESISTOR, CHIP 62K 1/10W(1608)
R1347	1-218-823-11	s	RESISTOR,CHIP 100 1/10W (1608)
R1348	1-218-823-11	s	RESISTOR,CHIP 100 1/10W (1608)
R1349	1-218-823-11	s	RESISTOR,CHIP 100 1/10W (1608)
R1350	1-218-823-11	s	RESISTOR,CHIP 100 1/10W (1608)
R1382	1-216-864-11	s	CONDUCTOR, CHIP (1608)
R1383	1-216-864-11	s	CONDUCTOR, CHIP (1608)
R1385	1-218-835-11	s	RESISTOR,CHIP 330 1/10W (1608)
R1386	1-218-847-11	s	RESISTOR, CHIP 1K 1/10W (1608)
R1387	1-218-847-11	s	RESISTOR, CHIP 1K 1/10W (1608)
R1388	1-218-859-11	s	RESISTOR,CHIP 3.3K 1/10W(1608)
R1389	1-218-855-11	s	RESISTOR,CHIP 2.2K 1/10W(1608)
R1390	1-218-860-11	s	RESISTOR,CHIP 3.6K 1/10W(1608)
R1392	1-216-864-11	s	CONDUCTOR, CHIP (1608)
R1393	1-211-985-11	s	RESISTOR,CHIP 47 1/10W (1608)
R1394	1-216-864-11	s	CONDUCTOR, CHIP (1608)
R1401	1-211-985-11	s	RESISTOR,CHIP 47 1/10W (1608)
R1402	1-216-864-11	s	CONDUCTOR, CHIP (1608)
R1403	1-211-985-11	s	RESISTOR,CHIP 47 1/10W (1608)
R1404	1-218-895-11	s	RESISTOR,CHIP 100K 1/10W(1608)
R1405	1-216-864-11	s	CONDUCTOR, CHIP (1608)

(VPR-64 BOARD [SUFFIX 17-] for MSW RECORDER)

Ref. No. or Q'ty	Part No.	SP	Description
R1406	1-211-985-11	s	RESISTOR,CHIP 47 1/10W (1608)
R1407	1-218-839-11	s	RESISTOR,CHIP 470 1/10W (1608)
R1409	1-216-864-11	s	CONDUCTOR, CHIP (1608)
R1410	1-218-839-11	s	RESISTOR,CHIP 470 1/10W (1608)
R1411	1-218-839-11	s	RESISTOR,CHIP 470 1/10W (1608)
R1412	1-218-895-11	s	RESISTOR,CHIP 100K 1/10W(1608)
R1413	1-216-864-11	s	CONDUCTOR, CHIP (1608)
R1414	1-216-864-11	s	CONDUCTOR, CHIP (1608)
R1415	1-218-895-11	s	RESISTOR,CHIP 100K 1/10W(1608)
R1416	1-218-857-11	s	RESISTOR,CHIP 2.7K 1/10W(1608)
R1419	1-218-857-11	s	RESISTOR,CHIP 2.7K 1/10W(1608)
R1420	1-218-857-11	s	RESISTOR,CHIP 2.7K 1/10W(1608)
R1421	1-218-895-11	s	RESISTOR,CHIP 100K 1/10W(1608)
R1422	1-216-864-11	s	CONDUCTOR, CHIP (1608)
R1423	1-218-871-11	s	RESISTOR,CHIP 10K 1/10W (1608)
R1424	1-218-839-11	s	RESISTOR,CHIP 470 1/10W (1608)
R1427	1-218-871-11	s	RESISTOR,CHIP 10K 1/10W (1608)
R1428	1-218-839-11	s	RESISTOR,CHIP 470 1/10W (1608)
R1429	1-218-871-11	s	RESISTOR,CHIP 10K 1/10W (1608)
R1430	1-218-839-11	s	RESISTOR,CHIP 470 1/10W (1608)
R1431	1-218-871-11	s	RESISTOR,CHIP 10K 1/10W (1608)
R1432	1-218-839-11	s	RESISTOR,CHIP 470 1/10W (1608)
R1433	1-218-823-11	s	RESISTOR,CHIP 100 1/10W (1608)
R1435	1-218-823-11	s	RESISTOR,CHIP 100 1/10W (1608)
R1436	1-218-823-11	s	RESISTOR,CHIP 100 1/10W (1608)
R1437	1-218-823-11	s	RESISTOR,CHIP 100 1/10W (1608)
R1438	1-218-839-11	s	RESISTOR,CHIP 470 1/10W (1608)
R1439	1-218-839-11	s	RESISTOR,CHIP 470 1/10W (1608)
R1440	1-211-985-11	s	RESISTOR,CHIP 47 1/10W (1608)
R1441	1-218-857-11	s	RESISTOR,CHIP 2.7K 1/10W(1608)
R1442	1-218-871-11	s	RESISTOR,CHIP 10K 1/10W (1608)
R1444	1-211-985-11	s	RESISTOR,CHIP 47 1/10W (1608)
R1445	1-211-985-11	s	RESISTOR,CHIP 47 1/10W (1608)
R1446	1-211-985-11	s	RESISTOR,CHIP 47 1/10W (1608)
R1447	1-211-985-11	s	RESISTOR,CHIP 47 1/10W (1608)
R1448	1-211-985-11	s	RESISTOR,CHIP 47 1/10W (1608)
R1449	1-211-985-11	s	RESISTOR,CHIP 47 1/10W (1608)
R1450	1-211-977-11	s	RESISTOR,CHIP 22 1/10W (1608)
R1451	1-218-895-11	s	RESISTOR,CHIP 100K 1/10W(1608)
R1452	1-216-864-11	s	CONDUCTOR, CHIP (1608)
R1453	1-216-864-11	s	CONDUCTOR, CHIP (1608)
R1454	1-216-864-11	s	CONDUCTOR, CHIP (1608)
R1455	1-216-864-11	s	CONDUCTOR, CHIP (1608)
R1456	1-216-864-11	s	CONDUCTOR, CHIP (1608)
R1457	1-211-985-11	s	RESISTOR,CHIP 47 1/10W (1608)
R1458	1-218-823-11	s	RESISTOR,CHIP 100 1/10W (1608)
R1460	1-216-864-11	s	CONDUCTOR, CHIP (1608)
R1462	1-211-985-11	s	RESISTOR,CHIP 47 1/10W (1608)
R1463	1-211-985-11	s	RESISTOR,CHIP 47 1/10W (1608)
R1500	1-211-985-11	s	RESISTOR,CHIP 47 1/10W (1608)
R1502	1-218-823-11	s	RESISTOR,CHIP 100 1/10W (1608)
R1503	1-218-831-11	s	RESISTOR, CHIP 220 1/10W(1608)
R1504	1-218-831-11	s	RESISTOR, CHIP 220 1/10W(1608)
R1505	1-218-831-11	s	RESISTOR, CHIP 220 1/10W(1608)
R1506	1-218-831-11	s	RESISTOR, CHIP 220 1/10W(1608)
R1507	1-218-831-11	s	RESISTOR, CHIP 220 1/10W(1608)
R1508	1-218-831-11	s	RESISTOR, CHIP 220 1/10W(1608)
R1509	1-218-831-11	s	RESISTOR, CHIP 220 1/10W(1608)
R1510	1-218-831-11	s	RESISTOR, CHIP 220 1/10W(1608)

(VPR-64 BOARD [SUFFIX 17-] for MSW RECORDER)

Ref. No. or Q'ty	Part No.	SP	Description
R1511	1-218-831-11	s	RESISTOR, CHIP 220 1/10W(1608)
R1512	1-218-831-11	s	RESISTOR, CHIP 220 1/10W(1608)
R1513	1-218-831-11	s	RESISTOR, CHIP 220 1/10W(1608)
R1514	1-218-831-11	s	RESISTOR, CHIP 220 1/10W(1608)
R1515	1-218-831-11	s	RESISTOR, CHIP 220 1/10W(1608)
R1516	1-218-831-11	s	RESISTOR, CHIP 220 1/10W(1608)
R1517	1-218-831-11	s	RESISTOR, CHIP 220 1/10W(1608)
R1518	1-218-831-11	s	RESISTOR, CHIP 220 1/10W(1608)
R1519	1-218-895-11	s	RESISTOR,CHIP 100K 1/10W(1608)
R1520	1-218-831-11	s	RESISTOR, CHIP 220 1/10W(1608)
R1521	1-216-864-11	s	CONDUCTOR, CHIP (1608)
R1522	1-216-864-11	s	CONDUCTOR, CHIP (1608)
R1523	1-216-864-11	s	CONDUCTOR, CHIP (1608)
R1524	1-218-887-11	s	RESISTOR,CHIP 47K 1/10W (1608)
R1525	1-218-837-11	s	RESISTOR,CHIP 390 1/10W (1608)
R1526	1-218-871-11	s	RESISTOR,CHIP 10K 1/10W (1608)
R1527	1-218-871-11	s	RESISTOR,CHIP 10K 1/10W (1608)
R1530	1-211-977-11	s	RESISTOR,CHIP 22 1/10W (1608)
R1531	1-211-977-11	s	RESISTOR,CHIP 22 1/10W (1608)
R1532	1-211-977-11	s	RESISTOR,CHIP 22 1/10W (1608)
R1533	1-211-977-11	s	RESISTOR,CHIP 22 1/10W (1608)
R1534	1-211-977-11	s	RESISTOR,CHIP 22 1/10W (1608)
R1535	1-211-977-11	s	RESISTOR,CHIP 22 1/10W (1608)
R1536	1-211-977-11	s	RESISTOR,CHIP 22 1/10W (1608)
R1537	1-211-977-11	s	RESISTOR,CHIP 22 1/10W (1608)
R1538	1-218-895-11	s	RESISTOR,CHIP 100K 1/10W(1608)
R1539	1-218-895-11	s	RESISTOR,CHIP 100K 1/10W(1608)
R1540	1-218-895-11	s	RESISTOR,CHIP 100K 1/10W(1608)
R1541	1-218-895-11	s	RESISTOR,CHIP 100K 1/10W(1608)
R1544	1-218-895-11	s	RESISTOR,CHIP 100K 1/10W(1608)
R1545	1-218-895-11	s	RESISTOR,CHIP 100K 1/10W(1608)
R1546	1-218-863-11	s	RESISTOR,CHIP 4.7K 1/10W(1608)
R1547	1-218-863-11	s	RESISTOR,CHIP 4.7K 1/10W(1608)
R1548	1-218-871-11	s	RESISTOR,CHIP 10K 1/10W (1608)
R1549	1-218-871-11	s	RESISTOR,CHIP 10K 1/10W (1608)
R1550	1-218-847-11	s	RESISTOR, CHIP 1K 1/10W (1608)
R1551	1-218-847-11	s	RESISTOR, CHIP 1K 1/10W (1608)
R1552	1-218-847-11	s	RESISTOR, CHIP 1K 1/10W (1608)
R1553	1-218-863-11	s	RESISTOR,CHIP 4.7K 1/10W(1608)
R1554	1-218-871-11	s	RESISTOR,CHIP 10K 1/10W (1608)
R1555	1-211-977-11	s	RESISTOR,CHIP 22 1/10W (1608)
R1556	1-211-985-11	s	RESISTOR,CHIP 47 1/10W (1608)
R1557	1-218-895-11	s	RESISTOR,CHIP 100K 1/10W(1608)
R1558	1-216-864-11	s	CONDUCTOR, CHIP (1608)
R1590	1-218-847-11	s	RESISTOR, CHIP 1K 1/10W (1608)
R1591	1-218-847-11	s	RESISTOR, CHIP 1K 1/10W (1608)
R1592	1-218-835-11	s	RESISTOR,CHIP 330 1/10W (1608)
R1593	1-218-835-11	s	RESISTOR,CHIP 330 1/10W (1608)
R1594	1-218-871-11	s	RESISTOR,CHIP 10K 1/10W (1608)
RB700	1-233-411-11	s	RESISTOR,CHIP NETWORK 220/3216
RB701	1-233-411-11	s	RESISTOR,CHIP NETWORK 220/3216
RB702	1-233-411-11	s	RESISTOR,CHIP NETWORK 220/3216
RB703	1-233-411-11	s	RESISTOR,CHIP NETWORK 220/3216
RB704	1-233-411-11	s	RESISTOR,CHIP NETWORK 220/3216
RB705	1-233-411-11	s	RESISTOR,CHIP NETWORK 220/3216
RB719	1-236-908-11	s	RESISTOR,NETWORK 10K (3216)
RB720	1-236-908-11	s	RESISTOR,NETWORK 10K (3216)
RB800	1-233-411-11	s	RESISTOR,CHIP NETWORK 220/3216
RB801	1-233-411-11	s	RESISTOR,CHIP NETWORK 220/3216

(VPR-64 BOARD [SUFFIX 17-] for MSW RECORDER)

Ref. No. or Q'ty	Part No.	SP	Description
RB802	1-233-411-11	s	RESISTOR,CHIP NETWORK 220/3216
RB803	1-233-411-11	s	RESISTOR,CHIP NETWORK 220/3216
RB804	1-233-411-11	s	RESISTOR,CHIP NETWORK 220/3216
RB805	1-233-411-11	s	RESISTOR,CHIP NETWORK 220/3216
RB806	1-233-411-11	s	RESISTOR,CHIP NETWORK 220/3216
RB807	1-233-411-11	s	RESISTOR,CHIP NETWORK 220/3216
RB808	1-233-411-11	s	RESISTOR,CHIP NETWORK 220/3216
RB809	1-233-411-11	s	RESISTOR,CHIP NETWORK 220/3216
RB1100	1-233-411-11	s	RESISTOR,CHIP NETWORK 220/3216
RB1101	1-233-411-11	s	RESISTOR,CHIP NETWORK 220/3216
RB1500	1-234-397-11	s	NETWORK, RES (8 GANG) 100K
RB1501	1-234-397-11	s	NETWORK, RES (8 GANG) 100K
RB1502	1-234-397-11	s	NETWORK, RES (8 GANG) 100K
RB1503	1-234-397-11	s	NETWORK, RES (8 GANG) 100K
RB1504	1-234-397-11	s	NETWORK, RES (8 GANG) 100K
RB1505	1-234-397-11	s	NETWORK, RES (8 GANG) 100K
RB1506	1-234-397-11	s	NETWORK, RES (8 GANG) 100K
RB1507	1-234-397-11	s	NETWORK, RES (8 GANG) 100K
RB1508	1-234-397-11	s	NETWORK, RES (8 GANG) 100K
RB1509	1-234-397-11	s	NETWORK, RES (8 GANG) 100K
RV1	1-225-786-11	s	RES, ADJ, CERMET 200
RV2	1-225-786-11	s	RES, ADJ, CERMET 200
TH100	1-810-812-11	s	THERMISTOR, NTC (1608)
TP103	1-535-877-22	s	CHIP,CHECKER (TEST POINT)
TP105	1-535-877-22	s	CHIP,CHECKER (TEST POINT)
TP300	1-535-877-22	s	CHIP,CHECKER (TEST POINT)
TP503	1-535-877-22	s	CHIP,CHECKER (TEST POINT)
TP504	1-535-877-22	s	CHIP,CHECKER (TEST POINT)
TP505	1-535-877-22	s	CHIP,CHECKER (TEST POINT)
TP506	1-535-877-22	s	CHIP,CHECKER (TEST POINT)
TP800	1-535-877-22	s	CHIP,CHECKER (TEST POINT)
TP900	1-535-877-22	s	CHIP,CHECKER (TEST POINT)
TP901	1-535-877-22	s	CHIP,CHECKER (TEST POINT)
TP902	1-535-877-22	s	CHIP,CHECKER (TEST POINT)
TP903	1-535-877-22	s	CHIP,CHECKER (TEST POINT)
TP904	1-535-877-22	s	CHIP,CHECKER (TEST POINT)
TP905	1-535-877-22	s	CHIP,CHECKER (TEST POINT)
TP906	1-535-877-22	s	CHIP,CHECKER (TEST POINT)
TP907	1-535-877-22	s	CHIP,CHECKER (TEST POINT)
TP908	1-535-877-22	s	CHIP,CHECKER (TEST POINT)
TP909	1-535-877-22	s	CHIP,CHECKER (TEST POINT)
TP910	1-535-877-22	s	CHIP,CHECKER (TEST POINT)
TP911	1-535-877-22	s	CHIP,CHECKER (TEST POINT)
TP1100	1-535-877-22	s	CHIP,CHECKER (TEST POINT)
TP1200	1-535-877-22	s	CHIP,CHECKER (TEST POINT)
TP1201	1-535-877-22	s	CHIP,CHECKER (TEST POINT)
X300	1-813-252-11	s	OSCILLATOR, CRYSTAL
X301	1-813-251-11	s	OSCILLATOR, CRYSTAL
X302	1-795-764-11	s	OSCILLATOR, CRYSTAL
X900	1-813-251-11	s	OSCILLATOR, CRYSTAL
X901	1-813-252-11	s	OSCILLATOR, CRYSTAL
X1203	1-795-764-11	s	OSCILLATOR, CRYSTAL
X1204	1-795-761-11	s	OSCILLATOR, CRYSTAL
X1205	1-795-762-11	s	OSCILLATOR, CRYSTAL
X1206	1-813-253-11	s	OSCILLATOR, CRYSTAL

VPR-64A BOARD [SUFFIX 15] for HDW and MSW PLAYER

[Lot No. 261 - 414] HDW-2000, M2000/P, M2100/P, A2100
MSW-M2100/P

*a: [Lot No. 261 -]
*b: [Lot No. 2A1 - 414]

Ref. No. or Q'ty	Part No.	SP	Description
1pc	A-8327-279-C	s	MOUNTED CIRCUIT BOARD, VPR-64A
3pcs	3-191-747-11	o	SUPPORT (M3), HEXAGON
1pc	3-701-822-00	s	HOLDER, WIRE
6pcs	7-682-545-04	s	SCREW +B3X4
6pcs	7-682-902-11	s	SCREW +PWH 2.6X5
1pc	3-179-084-11	s	LEVER (R), C BOARD
1pc	3-179-085-11	s	LEVER (L), C BOARD
C700	1-164-156-11	s	CAPACITOR,CERAMIC 0.1MF/25V F
C701	1-164-156-11	s	CAPACITOR,CERAMIC 0.1MF/25V F
C702	1-164-156-11	s	CAPACITOR,CERAMIC 0.1MF/25V F
C703	1-164-156-11	s	CAPACITOR,CERAMIC 0.1MF/25V F
C704	1-164-156-11	s	CAPACITOR,CERAMIC 0.1MF/25V F
C714	1-164-156-11	s	CAPACITOR,CERAMIC 0.1MF/25V F
C715	1-164-156-11	s	CAPACITOR,CERAMIC 0.1MF/25V F
C716	1-164-156-11	s	CAPACITOR,CERAMIC 0.1MF/25V F
C717	1-164-156-11	s	CAPACITOR,CERAMIC 0.1MF/25V F
C718	1-164-156-11	s	CAPACITOR,CERAMIC 0.1MF/25V F
C719	1-164-156-11	s	CAPACITOR,CERAMIC 0.1MF/25V F
C720	1-164-156-11	s	CAPACITOR,CERAMIC 0.1MF/25V F
C721	1-164-156-11	s	CAPACITOR,CERAMIC 0.1MF/25V F
C722	1-164-156-11	s	CAPACITOR,CERAMIC 0.1MF/25V F
C723	1-164-156-11	s	CAPACITOR,CERAMIC 0.1MF/25V F
C724	1-164-156-11	s	CAPACITOR,CERAMIC 0.1MF/25V F
C725	1-164-156-11	s	CAPACITOR,CERAMIC 0.1MF/25V F
C726	1-164-156-11	s	CAPACITOR,CERAMIC 0.1MF/25V F
C727	1-164-156-11	s	CAPACITOR,CERAMIC 0.1MF/25V F
C728	1-164-156-11	s	CAPACITOR,CERAMIC 0.1MF/25V F
C729	1-164-156-11	s	CAPACITOR,CERAMIC 0.1MF/25V F
C730	1-164-156-11	s	CAPACITOR,CERAMIC 0.1MF/25V F
C731	1-164-156-11	s	CAPACITOR,CERAMIC 0.1MF/25V F
C732	1-164-156-11	s	CAPACITOR,CERAMIC 0.1MF/25V F
C733	1-164-156-11	s	CAPACITOR,CERAMIC 0.1MF/25V F
C734	1-164-156-11	s	CAPACITOR,CERAMIC 0.1MF/25V F
C735	1-164-156-11	s	CAPACITOR,CERAMIC 0.1MF/25V F
C736	1-107-686-11	s	CAPACITOR,TANTALUM 4.7MF/16V
C739	1-111-253-11	s	CAPACITOR TANTALUM 100MF/6.3V
C751	1-164-156-11	s	CAPACITOR,CERAMIC 0.1MF/25V F
C752	1-164-156-11	s	CAPACITOR,CERAMIC 0.1MF/25V F
C753	1-164-156-11	s	CAPACITOR,CERAMIC 0.1MF/25V F
C754	1-164-156-11	s	CAPACITOR,CERAMIC 0.1MF/25V F
C755	1-164-156-11	s	CAPACITOR,CERAMIC 0.1MF/25V F
C756	1-164-156-11	s	CAPACITOR,CERAMIC 0.1MF/25V F
C790	1-164-156-11	s	CAPACITOR,CERAMIC 0.1MF/25V F
C791	1-164-156-11	s	CAPACITOR,CERAMIC 0.1MF/25V F
C792	1-164-156-11	s	CAPACITOR,CERAMIC 0.1MF/25V F
C793	1-164-156-11	s	CAPACITOR,CERAMIC 0.1MF/25V F
C794	1-164-156-11	s	CAPACITOR,CERAMIC 0.1MF/25V F
C795	1-164-156-11	s	CAPACITOR,CERAMIC 0.1MF/25V F
C796	1-164-156-11	s	CAPACITOR,CERAMIC 0.1MF/25V F
C797	1-164-156-11	s	CAPACITOR,CERAMIC 0.1MF/25V F
C800	1-164-156-11	s	CAPACITOR,CERAMIC 0.1MF/25V F
C801	1-164-156-11	s	CAPACITOR,CERAMIC 0.1MF/25V F
C802	1-164-156-11	s	CAPACITOR,CERAMIC 0.1MF/25V F
C803	1-164-156-11	s	CAPACITOR,CERAMIC 0.1MF/25V F

(VPR-64A BOARD [SUFFIX 15] for HDW and MSW PLAYER)

Ref. No. or Q'ty	Part No.	SP	Description
C804	1-164-156-11	s	CAPACITOR,CERAMIC 0.1MF/25V F
C805	1-164-156-11	s	CAPACITOR,CERAMIC 0.1MF/25V F
C806	1-164-156-11	s	CAPACITOR,CERAMIC 0.1MF/25V F
C807	1-164-156-11	s	CAPACITOR,CERAMIC 0.1MF/25V F
C808	1-164-156-11	s	CAPACITOR,CERAMIC 0.1MF/25V F
C809	1-164-156-11	s	CAPACITOR,CERAMIC 0.1MF/25V F
C810	1-164-156-11	s	CAPACITOR,CERAMIC 0.1MF/25V F
C811	1-164-156-11	s	CAPACITOR,CERAMIC 0.1MF/25V F
C812	1-164-156-11	s	CAPACITOR,CERAMIC 0.1MF/25V F
C813	1-164-156-11	s	CAPACITOR,CERAMIC 0.1MF/25V F
C814	1-164-156-11	s	CAPACITOR,CERAMIC 0.1MF/25V F
C815	1-164-156-11	s	CAPACITOR,CERAMIC 0.1MF/25V F
C816	1-164-156-11	s	CAPACITOR,CERAMIC 0.1MF/25V F
C817	1-164-156-11	s	CAPACITOR,CERAMIC 0.1MF/25V F
C818	1-164-156-11	s	CAPACITOR,CERAMIC 0.1MF/25V F
C819	1-164-156-11	s	CAPACITOR,CERAMIC 0.1MF/25V F
C820	1-164-156-11	s	CAPACITOR,CERAMIC 0.1MF/25V F
C821	1-164-156-11	s	CAPACITOR,CERAMIC 0.1MF/25V F
C822	1-164-156-11	s	CAPACITOR,CERAMIC 0.1MF/25V F
C823	1-164-156-11	s	CAPACITOR,CERAMIC 0.1MF/25V F
C824	1-164-156-11	s	CAPACITOR,CERAMIC 0.1MF/25V F
C825	1-164-156-11	s	CAPACITOR,CERAMIC 0.1MF/25V F
C826	1-164-156-11	s	CAPACITOR,CERAMIC 0.1MF/25V F
C827	1-164-156-11	s	CAPACITOR,CERAMIC 0.1MF/25V F
C828	1-164-156-11	s	CAPACITOR,CERAMIC 0.1MF/25V F
C829	1-164-156-11	s	CAPACITOR,CERAMIC 0.1MF/25V F
C838	1-164-156-11	s	CAPACITOR,CERAMIC 0.1MF/25V F
C839	1-164-156-11	s	CAPACITOR,CERAMIC 0.1MF/25V F
C840	1-164-156-11	s	CAPACITOR,CERAMIC 0.1MF/25V F
C849	1-164-156-11	s	CAPACITOR,CERAMIC 0.1MF/25V F
C850	1-164-156-11	s	CAPACITOR,CERAMIC 0.1MF/25V F
C851	1-164-156-11	s	CAPACITOR,CERAMIC 0.1MF/25V F
C852	1-164-156-11	s	CAPACITOR,CERAMIC 0.1MF/25V F
C853	1-164-156-11	s	CAPACITOR,CERAMIC 0.1MF/25V F
C854	1-164-156-11	s	CAPACITOR,CERAMIC 0.1MF/25V F
C855	1-164-156-11	s	CAPACITOR,CERAMIC 0.1MF/25V F
C856	1-164-156-11	s	CAPACITOR,CERAMIC 0.1MF/25V F
C857	1-164-156-11	s	CAPACITOR,CERAMIC 0.1MF/25V F
C858	1-164-156-11	s	CAPACITOR,CERAMIC 0.1MF/25V F
C859	1-164-156-11	s	CAPACITOR,CERAMIC 0.1MF/25V F
C860	1-164-156-11	s	CAPACITOR,CERAMIC 0.1MF/25V F
C901	1-107-686-11	s	CAPACITOR,TANTALUM 4.7MF/16V
C903	1-162-925-11	s	CAPACITOR,CERAMIC 68PF/50V CH
C904	1-111-253-11	s	CAPACITOR TANTALUM 100MF/6.3V
C905	1-111-253-11	s	CAPACITOR TANTALUM 100MF/6.3V
C907	1-164-156-11	s	CAPACITOR,CERAMIC 0.1MF/25V F
C908	1-164-156-11	s	CAPACITOR,CERAMIC 0.1MF/25V F
C911	1-164-156-11	s	CAPACITOR,CERAMIC 0.1MF/25V F
C912	1-164-156-11	s	CAPACITOR,CERAMIC 0.1MF/25V F
C915	1-164-156-11	s	CAPACITOR,CERAMIC 0.1MF/25V F
C916	1-164-156-11	s	CAPACITOR,CERAMIC 0.1MF/25V F
C917	1-164-156-11	s	CAPACITOR,CERAMIC 0.1MF/25V F
C918	1-164-156-11	s	CAPACITOR,CERAMIC 0.1MF/25V F
C919	1-164-156-11	s	CAPACITOR,CERAMIC 0.1MF/25V F
C921	1-164-156-11	s	CAPACITOR,CERAMIC 0.1MF/25V F
C923	1-164-156-11	s	CAPACITOR,CERAMIC 0.1MF/25V F
C924	1-164-156-11	s	CAPACITOR,CERAMIC 0.1MF/25V F
C925	1-164-156-11	s	CAPACITOR,CERAMIC 0.1MF/25V F
C926	1-164-156-11	s	CAPACITOR,CERAMIC 0.1MF/25V F

(VPR-64A BOARD [SUFFIX 15] for HDW and MSW PLAYER)

Ref. No. or Q'ty	Part No.	SP	Description
C927	1-164-156-11	s	CAPACITOR,CERAMIC 0.1MF/25V F
C928	1-164-156-11	s	CAPACITOR,CERAMIC 0.1MF/25V F
C929	1-119-751-11	s	CAPACITOR,TANTALUM 22MF/16V
C930	1-164-156-11	s	CAPACITOR,CERAMIC 0.1MF/25V F
C931	1-164-156-11	s	CAPACITOR,CERAMIC 0.1MF/25V F
C932	1-165-849-11	s	CAPACITOR,TANTALUM ELECT 100MF
C935	1-164-156-11	s	CAPACITOR,CERAMIC 0.1MF/25V F
C937	1-107-686-11	s	CAPACITOR,TANTALUM 4.7MF/16V
C938	1-164-156-11	s	CAPACITOR,CERAMIC 0.1MF/25V F
C940	1-164-156-11	s	CAPACITOR,CERAMIC 0.1MF/25V F
C942	1-164-156-11	s	CAPACITOR,CERAMIC 0.1MF/25V F
C944	1-164-156-11	s	CAPACITOR,CERAMIC 0.1MF/25V F
C945	1-164-156-11	s	CAPACITOR,CERAMIC 0.1MF/25V F
C947	1-119-751-11	s	CAPACITOR,TANTALUM 22MF/16V
C948	1-164-156-11	s	CAPACITOR,CERAMIC 0.1MF/25V F
C950	1-113-985-11	s	CAPACITOR,TANTALUM 10MF/20V
C952	1-164-156-11	s	CAPACITOR,CERAMIC 0.1MF/25V F
C953	1-113-985-11	s	CAPACITOR,TANTALUM 10MF/20V
C955	1-164-156-11	s	CAPACITOR,CERAMIC 0.1MF/25V F
C956	1-164-156-11	s	CAPACITOR,CERAMIC 0.1MF/25V F
C959	1-165-849-11	s	CAPACITOR,TANTALUM ELECT 100MF
C960	1-164-156-11	s	CAPACITOR,CERAMIC 0.1MF/25V F
C961	1-164-156-11	s	CAPACITOR,CERAMIC 0.1MF/25V F
C962	1-164-156-11	s	CAPACITOR,CERAMIC 0.1MF/25V F
C963	1-164-156-11	s	CAPACITOR,CERAMIC 0.1MF/25V F
C964	1-164-156-11	s	CAPACITOR,CERAMIC 0.1MF/25V F
C968	1-164-156-11	s	CAPACITOR,CERAMIC 0.1MF/25V F
C969	1-164-156-11	s	CAPACITOR,CERAMIC 0.1MF/25V F
C970	1-164-156-11	s	CAPACITOR,CERAMIC 0.1MF/25V F
C971	1-164-156-11	s	CAPACITOR,CERAMIC 0.1MF/25V F
C972	1-164-156-11	s	CAPACITOR,CERAMIC 0.1MF/25V F
C973	1-165-849-11	s	CAPACITOR,TANTALUM ELECT 100MF
C974	1-165-849-11	s	CAPACITOR,TANTALUM ELECT 100MF
C975	1-165-849-11	s	CAPACITOR,TANTALUM ELECT 100MF
C976	1-164-156-11	s	CAPACITOR,CERAMIC 0.1MF/25V F
C977	1-164-156-11	s	CAPACITOR,CERAMIC 0.1MF/25V F
C978	1-164-156-11	s	CAPACITOR,CERAMIC 0.1MF/25V F
C979	1-162-965-11	s	CAPACITOR,CERAMIC 1500PF/50V B
C980	1-162-965-11	s	CAPACITOR,CERAMIC 1500PF/50V B
C981	1-162-914-11	s	CAPACITOR,CERAMIC 9PF/50V 1608
C982	1-162-914-11	s	CAPACITOR,CERAMIC 9PF/50V 1608
C983	1-162-965-11	s	CAPACITOR,CERAMIC 1500PF/50V B
C984	1-164-218-11	s	CAPACITOR,CERAMIC 180PF/50V CH
C985	1-162-965-11	s	CAPACITOR,CERAMIC 1500PF/50V B
C986	1-164-218-11	s	CAPACITOR,CERAMIC 180PF/50V CH
C987	1-162-908-11	s	CAPACITOR,CERAMIC 3PF/50V 1608
C988	1-162-908-11	s	CAPACITOR,CERAMIC 3PF/50V 1608
C989	1-162-908-11	s	CAPACITOR,CERAMIC 3PF/50V 1608
C990	1-162-909-11	s	CAPACITOR,CERAMIC 4PF/50V CH
C991	1-164-156-11	s	CAPACITOR,CERAMIC 0.1MF/25V F
C992	1-162-910-11	s	CAPACITOR,CERAMIC 5PF/50V 1608
C996	1-164-156-11	s	CAPACITOR,CERAMIC 0.1MF/25V F
C997	1-164-156-11	s	CAPACITOR,CERAMIC 0.1MF/25V F
C998	1-164-156-11	s	CAPACITOR,CERAMIC 0.1MF/25V F
C999	1-164-156-11	s	CAPACITOR,CERAMIC 0.1MF/25V F
C1000	1-164-156-11	s	CAPACITOR,CERAMIC 0.1MF/25V F
C1001	1-164-156-11	s	CAPACITOR,CERAMIC 0.1MF/25V F
C1002	1-164-156-11	s	CAPACITOR,CERAMIC 0.1MF/25V F
C1003	1-164-156-11	s	CAPACITOR,CERAMIC 0.1MF/25V F

(VPR-64A BOARD [SUFFIX 15] for HDW and MSW PLAYER)

Ref. No. or Q'ty	Part No.	SP	Description
C1004	1-162-923-11	s	CAPACITOR,CERAMIC 47PF/50V CH
C1005	1-107-686-11	s	CAPACITOR,TANTALUM 4.7MF/16V
C1006	1-107-686-11	s	CAPACITOR,TANTALUM 4.7MF/16V
C1007	1-107-686-11	s	CAPACITOR,TANTALUM 4.7MF/16V
C1008	1-107-686-11	s	CAPACITOR,TANTALUM 4.7MF/16V
C1009	1-107-686-11	s	CAPACITOR,TANTALUM 4.7MF/16V
C1010	1-107-686-11	s	CAPACITOR,TANTALUM 4.7MF/16V
C1011	1-107-686-11	s	CAPACITOR,TANTALUM 4.7MF/16V
C1012	1-107-686-11	s	CAPACITOR,TANTALUM 4.7MF/16V
C1014	1-162-927-11	s	CAPACITOR,CERAMIC 100PF/50V CH
C1015	1-107-689-21	s	CAPACITOR,TANTALUM 1MF/35V
C1016	1-107-689-21	s	CAPACITOR,TANTALUM 1MF/35V
C1017	1-107-689-21	s	CAPACITOR,TANTALUM 1MF/35V
C1018	1-107-689-21	s	CAPACITOR,TANTALUM 1MF/35V
C1019	1-162-910-11	s	CAPACITOR,CERAMIC 5PF/50V 1608
C1028	1-162-923-11	s	CAPACITOR,CERAMIC 47PF/50V CH
C1037	1-162-915-11	s	CAPACITOR,CERAMIC 10PF/50V CH
C1038	1-162-910-11	s	CAPACITOR,CERAMIC 5PF/50V 1608
C1039	1-164-156-11	s	CAPACITOR,CERAMIC 0.1MF/25V F
C1040	1-164-156-11	s	CAPACITOR,CERAMIC 0.1MF/25V F
C1041	1-162-910-11	s	CAPACITOR,CERAMIC 5PF/50V 1608
C1045	1-164-156-11	s	CAPACITOR,CERAMIC 0.1MF/25V F
C1046	1-164-156-11	s	CAPACITOR,CERAMIC 0.1MF/25V F
C1047	1-164-156-11	s	CAPACITOR,CERAMIC 0.1MF/25V F
C1048	1-164-156-11	s	CAPACITOR,CERAMIC 0.1MF/25V F
C1049	1-164-156-11	s	CAPACITOR,CERAMIC 0.1MF/25V F
C1050	1-164-156-11	s	CAPACITOR,CERAMIC 0.1MF/25V F
C1052	1-162-910-11	s	CAPACITOR,CERAMIC 5PF/50V 1608
C1053	1-162-910-11	s	CAPACITOR,CERAMIC 5PF/50V 1608
C1054	1-164-156-11	s	CAPACITOR,CERAMIC 0.1MF/25V F
C1055	1-164-156-11	s	CAPACITOR,CERAMIC 0.1MF/25V F
C1056	1-164-156-11	s	CAPACITOR,CERAMIC 0.1MF/25V F
C1057	1-164-156-11	s	CAPACITOR,CERAMIC 0.1MF/25V F
C1060	1-164-156-11	s	CAPACITOR,CERAMIC 0.1MF/25V F
C1061	1-164-156-11	s	CAPACITOR,CERAMIC 0.1MF/25V F
C1062	1-164-156-11	s	CAPACITOR,CERAMIC 0.1MF/25V F
C1063	1-164-156-11	s	CAPACITOR,CERAMIC 0.1MF/25V F
C1064	1-126-206-11	s	CAPACITOR, ELECT 100MF/6.3V
C1065	1-126-206-11	s	CAPACITOR, ELECT 100MF/6.3V
C1066	1-107-826-11	s	CAPACITOR,CHIP CERAMIC 0.1MF
C1067	1-107-826-11	s	CAPACITOR,CHIP CERAMIC 0.1MF
C1068	1-107-826-11	s	CAPACITOR,CHIP CERAMIC 0.1MF
C1069	1-162-923-11	s	CAPACITOR,CERAMIC 47PF/50V CH
C1070	1-135-341-11	s	CAPACITOR,SOLID ELECT 330MF
C1071	1-164-156-11	s	CAPACITOR,CERAMIC 0.1MF/25V F
C1100	1-164-156-11	s	CAPACITOR,CERAMIC 0.1MF/25V F
C1102	1-126-206-11	s	CAPACITOR, ELECT 100MF/6.3V
C1103	1-126-206-11	s	CAPACITOR, ELECT 100MF/6.3V
C1104	1-164-156-11	s	CAPACITOR,CERAMIC 0.1MF/25V F
C1105	1-164-156-11	s	CAPACITOR,CERAMIC 0.1MF/25V F
C1107	1-164-156-11	s	CAPACITOR,CERAMIC 0.1MF/25V F
C1108	1-162-921-11	s	CAPACITOR,CERAMIC 33PF/50V CH
C1109	1-164-230-11	s	CAPACITOR,CERAMIC 220PF/50V
C1110	1-164-156-11	s	CAPACITOR,CERAMIC 0.1MF/25V F
C1111	1-164-156-11	s	CAPACITOR,CERAMIC 0.1MF/25V F
C1112	1-164-315-11	s	CAPACITOR,CERAMIC 470PF/50V CH
C1113	1-164-230-11	s	CAPACITOR,CERAMIC 220PF/50V
C1114	1-164-315-11	s	CAPACITOR,CERAMIC 470PF/50V CH
C1115	1-164-230-11	s	CAPACITOR,CERAMIC 220PF/50V

(VPR-64A BOARD [SUFFIX 15] for HDW and MSW PLAYER)

Ref. No. or Q'ty	Part No.	SP	Description
C1116	1-164-156-11	s	CAPACITOR,CERAMIC 0.1MF/25V F
C1118	1-162-970-11	s	CAPACITOR CERAMIC 0.01MF/25V B
C1120	1-164-156-11	s	CAPACITOR,CERAMIC 0.1MF/25V F
C1122	1-127-954-11	s	CAPACITOR,CHIP FILM 0.047MF
C1123	1-164-156-11	s	CAPACITOR,CERAMIC 0.1MF/25V F
C1124	1-164-156-11	s	CAPACITOR,CERAMIC 0.1MF/25V F
C1125	1-164-156-11	s	CAPACITOR,CERAMIC 0.1MF/25V F
C1126	1-164-156-11	s	CAPACITOR,CERAMIC 0.1MF/25V F
C1127	1-164-156-11	s	CAPACITOR,CERAMIC 0.1MF/25V F
C1128	1-162-911-11	s	CAPACITOR,CERAMIC 6PF/50V 1608
C1129	1-162-907-11	s	CAPACITOR,CERAMIC 2PF/50V(CK)
C1130	1-162-921-11	s	CAPACITOR,CERAMIC 33PF/50V CH
C1131	1-162-921-11	s	CAPACITOR,CERAMIC 33PF/50V CH
C1134	1-164-156-11	s	CAPACITOR,CERAMIC 0.1MF/25V F
C1135	1-164-156-11	s	CAPACITOR,CERAMIC 0.1MF/25V F
C1136	1-164-156-11	s	CAPACITOR,CERAMIC 0.1MF/25V F
C1137	1-164-156-11	s	CAPACITOR,CERAMIC 0.1MF/25V F
C1141	1-164-156-11	s	CAPACITOR,CERAMIC 0.1MF/25V F
C1142	1-164-156-11	s	CAPACITOR,CERAMIC 0.1MF/25V F
C1143	1-164-156-11	s	CAPACITOR,CERAMIC 0.1MF/25V F
C1145	1-164-156-11	s	CAPACITOR,CERAMIC 0.1MF/25V F
C1146	1-164-156-11	s	CAPACITOR,CERAMIC 0.1MF/25V F
C1149	1-164-156-11	s	CAPACITOR,CERAMIC 0.1MF/25V F
C1150	1-164-156-11	s	CAPACITOR,CERAMIC 0.1MF/25V F
C1151	1-164-156-11	s	CAPACITOR,CERAMIC 0.1MF/25V F
C1152	1-164-156-11	s	CAPACITOR,CERAMIC 0.1MF/25V F
C1153	1-107-826-11	s	CAPACITOR,CHIP CERAMIC 0.1MF
C1154	1-107-826-11	s	CAPACITOR,CHIP CERAMIC 0.1MF
C1155	1-164-156-11	s	CAPACITOR,CERAMIC 0.1MF/25V F
C1200	1-164-156-11	s	CAPACITOR,CERAMIC 0.1MF/25V F
C1203	1-162-925-11	s	CAPACITOR,CERAMIC 68PF/50V CH
C1204	1-164-230-11	s	CAPACITOR,CERAMIC 220PF/50V
C1205	1-162-925-11	s	CAPACITOR,CERAMIC 68PF/50V CH
C1206	1-164-156-11	s	CAPACITOR,CERAMIC 0.1MF/25V F
C1208	1-164-156-11	s	CAPACITOR,CERAMIC 0.1MF/25V F
C1209	1-164-156-11	s	CAPACITOR,CERAMIC 0.1MF/25V F
C1210	1-164-156-11	s	CAPACITOR,CERAMIC 0.1MF/25V F
C1211	1-164-156-11	s	CAPACITOR,CERAMIC 0.1MF/25V F
C1213	1-164-156-11	s	CAPACITOR,CERAMIC 0.1MF/25V F
C1214	1-164-156-11	s	CAPACITOR,CERAMIC 0.1MF/25V F
C1215	1-162-970-11	s	CAPACITOR CERAMIC 0.01MF/25V B
C1216	1-164-156-11	s	CAPACITOR,CERAMIC 0.1MF/25V F
C1217	1-164-156-11	s	CAPACITOR,CERAMIC 0.1MF/25V F
C1218	1-162-919-11	s	CAPACITOR,CERAMIC 22PF/50V CH
C1220	1-164-156-11	s	CAPACITOR,CERAMIC 0.1MF/25V F
C1221	1-164-156-11	s	CAPACITOR,CERAMIC 0.1MF/25V F
C1222	1-164-156-11	s	CAPACITOR,CERAMIC 0.1MF/25V F
C1223	1-162-925-11	s	CAPACITOR,CERAMIC 68PF/50V CH
C1224	1-107-686-11	s	CAPACITOR,TANTALUM 4.7MF/16V
C1225	1-164-230-11	s	CAPACITOR,CERAMIC 220PF/50V
C1227	1-162-925-11	s	CAPACITOR,CERAMIC 68PF/50V CH
C1228	1-162-925-11	s	CAPACITOR,CERAMIC 68PF/50V CH
C1229	1-164-156-11	s	CAPACITOR,CERAMIC 0.1MF/25V F
C1230	1-107-686-11	s	CAPACITOR,TANTALUM 4.7MF/16V
C1231	1-164-156-11	s	CAPACITOR,CERAMIC 0.1MF/25V F
C1232	1-164-156-11	s	CAPACITOR,CERAMIC 0.1MF/25V F
C1233	1-164-156-11	s	CAPACITOR,CERAMIC 0.1MF/25V F
C1234	1-164-156-11	s	CAPACITOR,CERAMIC 0.1MF/25V F
C1235	1-164-156-11	s	CAPACITOR,CERAMIC 0.1MF/25V F

(VPR-64A BOARD [SUFFIX 15] for HDW and MSW PLAYER)

Ref. No. or Q'ty	Part No.	SP	Description
C1236	1-164-156-11	s	CAPACITOR,CERAMIC 0.1MF/25V F
C1237	1-164-156-11	s	CAPACITOR,CERAMIC 0.1MF/25V F
C1238	1-115-412-11	s	CAPACITOR,CERAMIC 680PF/25V CH
C1239	1-164-156-11	s	CAPACITOR,CERAMIC 0.1MF/25V F
C1241	1-164-156-11	s	CAPACITOR,CERAMIC 0.1MF/25V F
C1242	1-162-927-11	s	CAPACITOR,CERAMIC 100PF/50V CH
C1245	1-164-156-11	s	CAPACITOR,CERAMIC 0.1MF/25V F
C1246	1-162-927-11	s	CAPACITOR,CERAMIC 100PF/50V CH
C1249	1-164-156-11	s	CAPACITOR,CERAMIC 0.1MF/25V F
C1250	1-164-156-11	s	CAPACITOR,CERAMIC 0.1MF/25V F
C1251	1-164-156-11	s	CAPACITOR,CERAMIC 0.1MF/25V F
C1252	1-111-253-11	s	CAPACITOR TANTALUM 100MF/6.3V
C1253	1-111-253-11	s	CAPACITOR TANTALUM 100MF/6.3V
C1254	1-111-253-11	s	CAPACITOR TANTALUM 100MF/6.3V
C1255	1-111-253-11	s	CAPACITOR TANTALUM 100MF/6.3V
C1256	1-119-751-11	s	CAPACITOR,TANTALUM 22MF/16V
C1258	1-164-156-11	s	CAPACITOR,CERAMIC 0.1MF/25V F
C1259	1-164-156-11	s	CAPACITOR,CERAMIC 0.1MF/25V F
C1261	1-164-156-11	s	CAPACITOR,CERAMIC 0.1MF/25V F
C1265	1-164-156-11	s	CAPACITOR,CERAMIC 0.1MF/25V F
C1266	1-164-156-11	s	CAPACITOR,CERAMIC 0.1MF/25V F
C1267	1-164-156-11	s	CAPACITOR,CERAMIC 0.1MF/25V F
C1272	1-164-156-11	s	CAPACITOR,CERAMIC 0.1MF/25V F
C1273	1-164-156-11	s	CAPACITOR,CERAMIC 0.1MF/25V F
C1274	1-164-156-11	s	CAPACITOR,CERAMIC 0.1MF/25V F
C1275	1-164-156-11	s	CAPACITOR,CERAMIC 0.1MF/25V F
C1276	1-164-156-11	s	CAPACITOR,CERAMIC 0.1MF/25V F
C1277	1-164-156-11	s	CAPACITOR,CERAMIC 0.1MF/25V F
C1278	1-164-156-11	s	CAPACITOR,CERAMIC 0.1MF/25V F
C1279	1-164-156-11	s	CAPACITOR,CERAMIC 0.1MF/25V F
C1280	1-164-156-11	s	CAPACITOR,CERAMIC 0.1MF/25V F
C1281	1-164-156-11	s	CAPACITOR,CERAMIC 0.1MF/25V F
C1282	1-164-156-11	s	CAPACITOR,CERAMIC 0.1MF/25V F
C1283	1-164-156-11	s	CAPACITOR,CERAMIC 0.1MF/25V F
C1284	1-164-156-11	s	CAPACITOR,CERAMIC 0.1MF/25V F
C1285	1-164-156-11	s	CAPACITOR,CERAMIC 0.1MF/25V F
C1286	1-164-156-11	s	CAPACITOR,CERAMIC 0.1MF/25V F
C1287	1-164-156-11	s	CAPACITOR,CERAMIC 0.1MF/25V F
C1288	1-164-156-11	s	CAPACITOR,CERAMIC 0.1MF/25V F
C1289	1-164-156-11	s	CAPACITOR,CERAMIC 0.1MF/25V F
C1290	1-164-156-11	s	CAPACITOR,CERAMIC 0.1MF/25V F
C1291	1-164-156-11	s	CAPACITOR,CERAMIC 0.1MF/25V F
C1292	1-164-156-11	s	CAPACITOR,CERAMIC 0.1MF/25V F
C1293	1-164-156-11	s	CAPACITOR,CERAMIC 0.1MF/25V F
C1294	1-164-156-11	s	CAPACITOR,CERAMIC 0.1MF/25V F
C1295	1-164-156-11	s	CAPACITOR,CERAMIC 0.1MF/25V F
C1296	1-164-156-11	s	CAPACITOR,CERAMIC 0.1MF/25V F
C1297	1-164-156-11	s	CAPACITOR,CERAMIC 0.1MF/25V F
C1298	1-164-156-11	s	CAPACITOR,CERAMIC 0.1MF/25V F
C1299	1-164-156-11	s	CAPACITOR,CERAMIC 0.1MF/25V F
C1300	1-164-156-11	s	CAPACITOR,CERAMIC 0.1MF/25V F
C1301	1-164-156-11	s	CAPACITOR,CERAMIC 0.1MF/25V F
C1302	1-164-156-11	s	CAPACITOR,CERAMIC 0.1MF/25V F
C1303	1-164-227-11	s	CAPACITOR,CERAMIC 0.022MF/25V
C1304	1-164-227-11	s	CAPACITOR,CERAMIC 0.022MF/25V
C1305	1-162-927-11	s	CAPACITOR,CERAMIC 100PF/50V CH
C1306	1-164-156-11	s	CAPACITOR,CERAMIC 0.1MF/25V F
C1307	1-164-156-11	s	CAPACITOR,CERAMIC 0.1MF/25V F
C1308	1-164-156-11	s	CAPACITOR,CERAMIC 0.1MF/25V F

(VPR-64A BOARD [SUFFIX 15] for HDW and MSW PLAYER)

Ref. No. or Q'ty	Part No.	SP	Description
C1309	1-162-927-11	s	CAPACITOR,CERAMIC 100PF/50V CH
C1310	1-162-927-11	s	CAPACITOR,CERAMIC 100PF/50V CH
C1311	1-164-380-11	s	CAPACITOR,CERAMIC 51PF CH (M-)
C1312	1-162-922-11	s	CAPACITOR,CERAMIC 39PF/50V CH
C1313	1-117-887-11	s	CAPACITOR,TANTALUM 220MF/6.3V
C1314	1-126-206-11	s	CAPACITOR, ELECT 100MF/6.3V
C1315	1-162-968-11	s	CAPACITOR,CERAMIC 4700PF/50V B
C1316	1-164-156-11	s	CAPACITOR,CERAMIC 0.1MF/25V F
C1319	1-164-156-11	s	CAPACITOR,CERAMIC 0.1MF/25V F
C1320	1-164-156-11	s	CAPACITOR,CERAMIC 0.1MF/25V F
C1321	1-164-156-11	s	CAPACITOR,CERAMIC 0.1MF/25V F
C1322	1-164-156-11	s	CAPACITOR,CERAMIC 0.1MF/25V F
C1323	1-164-156-11	s	CAPACITOR,CERAMIC 0.1MF/25V F
C1324	1-164-156-11	s	CAPACITOR,CERAMIC 0.1MF/25V F
C1325	1-164-156-11	s	CAPACITOR,CERAMIC 0.1MF/25V F
C1400	1-164-156-11	s	CAPACITOR,CERAMIC 0.1MF/25V F
C1401	1-164-156-11	s	CAPACITOR,CERAMIC 0.1MF/25V F
C1402	1-164-156-11	s	CAPACITOR,CERAMIC 0.1MF/25V F
C1403	1-164-156-11	s	CAPACITOR,CERAMIC 0.1MF/25V F
C1404	1-164-156-11	s	CAPACITOR,CERAMIC 0.1MF/25V F
C1405	1-164-156-11	s	CAPACITOR,CERAMIC 0.1MF/25V F
C1406	1-164-156-11	s	CAPACITOR,CERAMIC 0.1MF/25V F
C1407	1-164-156-11	s	CAPACITOR,CERAMIC 0.1MF/25V F
C1408	1-164-156-11	s	CAPACITOR,CERAMIC 0.1MF/25V F
C1410	1-164-156-11	s	CAPACITOR,CERAMIC 0.1MF/25V F
C1411	1-164-156-11	s	CAPACITOR,CERAMIC 0.1MF/25V F
C1412	1-164-156-11	s	CAPACITOR,CERAMIC 0.1MF/25V F
C1413	1-162-919-11	s	CAPACITOR,CERAMIC 22PF/50V CH
C1416	1-162-919-11	s	CAPACITOR,CERAMIC 22PF/50V CH
C1417	1-162-919-11	s	CAPACITOR,CERAMIC 22PF/50V CH
C1418	1-162-970-11	s	CAPACITOR CERAMIC 0.01MF/25V B
C1420	1-162-970-11	s	CAPACITOR CERAMIC 0.01MF/25V B
C1421	1-162-970-11	s	CAPACITOR CERAMIC 0.01MF/25V B
C1422	1-162-970-11	s	CAPACITOR CERAMIC 0.01MF/25V B
C1423	1-164-156-11	s	CAPACITOR,CERAMIC 0.1MF/25V F
C1424	1-162-919-11	s	CAPACITOR,CERAMIC 22PF/50V CH
C1426	1-162-919-11	s	CAPACITOR,CERAMIC 22PF/50V CH
C1427	1-162-919-11	s	CAPACITOR,CERAMIC 22PF/50V CH
C1428	1-162-919-11	s	CAPACITOR,CERAMIC 22PF/50V CH
C1429	1-162-919-11	s	CAPACITOR,CERAMIC 22PF/50V CH
C1431	1-162-919-11	s	CAPACITOR,CERAMIC 22PF/50V CH
C1432	1-162-919-11	s	CAPACITOR,CERAMIC 22PF/50V CH
C1433	1-162-919-11	s	CAPACITOR,CERAMIC 22PF/50V CH
C1434	1-164-156-11	s	CAPACITOR,CERAMIC 0.1MF/25V F
C1435	1-164-156-11	s	CAPACITOR,CERAMIC 0.1MF/25V F
C1436	1-164-156-11	s	CAPACITOR,CERAMIC 0.1MF/25V F
C1437	1-164-156-11	s	CAPACITOR,CERAMIC 0.1MF/25V F
C1438	1-162-919-11	s	CAPACITOR,CERAMIC 22PF/50V CH
C1439	1-162-919-11	s	CAPACITOR,CERAMIC 22PF/50V CH
C1440	1-162-919-11	s	CAPACITOR,CERAMIC 22PF/50V CH
C1441	1-162-970-11	s	CAPACITOR CERAMIC 0.01MF/25V B
C1442	1-164-156-11	s	CAPACITOR,CERAMIC 0.1MF/25V F
C1443	1-164-156-11	s	CAPACITOR,CERAMIC 0.1MF/25V F
C1444	1-164-156-11	s	CAPACITOR,CERAMIC 0.1MF/25V F
C1445	1-164-156-11	s	CAPACITOR,CERAMIC 0.1MF/25V F
C1446	1-164-156-11	s	CAPACITOR,CERAMIC 0.1MF/25V F
C1447	1-164-156-11	s	CAPACITOR,CERAMIC 0.1MF/25V F
C1448	1-164-156-11	s	CAPACITOR,CERAMIC 0.1MF/25V F
C1449	1-164-156-11	s	CAPACITOR,CERAMIC 0.1MF/25V F

(VPR-64A BOARD [SUFFIX 15] for HDW and MSW PLAYER)

Ref. No. or Q'ty	Part No.	SP	Description
C1450	1-104-851-11	s	CAPACITOR,TANTALUM 10MF/10V
C1451	1-164-156-11	s	CAPACITOR,CERAMIC 0.1MF/25V F
C1452	1-164-156-11	s	CAPACITOR,CERAMIC 0.1MF/25V F
C1505	1-117-681-11	s	CAPACITOR, ELECT 100MF/16V
C1507	1-164-156-11	s	CAPACITOR,CERAMIC 0.1MF/25V F
C1508	1-126-206-11	s	CAPACITOR, ELECT 100MF/6.3V
C1509	1-164-156-11	s	CAPACITOR,CERAMIC 0.1MF/25V F
C1510	1-117-681-11	s	CAPACITOR, ELECT 100MF/16V
C1511	1-164-156-11	s	CAPACITOR,CERAMIC 0.1MF/25V F
C1534	1-164-156-11	s	CAPACITOR,CERAMIC 0.1MF/25V F
C1535	1-164-156-11	s	CAPACITOR,CERAMIC 0.1MF/25V F
C1536	1-164-156-11	s	CAPACITOR,CERAMIC 0.1MF/25V F
C1538	1-164-156-11	s	CAPACITOR,CERAMIC 0.1MF/25V F
C1539	1-164-156-11	s	CAPACITOR,CERAMIC 0.1MF/25V F
C1540	1-164-230-11	s	CAPACITOR,CERAMIC 220PF/50V
C1541	1-164-156-11	s	CAPACITOR,CERAMIC 0.1MF/25V F
C1542	1-164-156-11	s	CAPACITOR,CERAMIC 0.1MF/25V F
C1543	1-164-156-11	s	CAPACITOR,CERAMIC 0.1MF/25V F
C1544	1-164-156-11	s	CAPACITOR,CERAMIC 0.1MF/25V F
C1545	1-164-156-11	s	CAPACITOR,CERAMIC 0.1MF/25V F
C1548	1-119-751-11	s	CAPACITOR,TANTALUM 22MF/16V
C1549	1-164-156-11	s	CAPACITOR,CERAMIC 0.1MF/25V F
C1550	1-164-156-11	s	CAPACITOR,CERAMIC 0.1MF/25V F
C1552	1-164-156-11	s	CAPACITOR,CERAMIC 0.1MF/25V F
C1555	1-164-156-11	s	CAPACITOR,CERAMIC 0.1MF/25V F
C1556	1-164-156-11	s	CAPACITOR,CERAMIC 0.1MF/25V F
C1559	1-164-156-11	s	CAPACITOR,CERAMIC 0.1MF/25V F
C1560	1-164-156-11	s	CAPACITOR,CERAMIC 0.1MF/25V F
C1561	1-164-156-11	s	CAPACITOR,CERAMIC 0.1MF/25V F
C1563	1-164-156-11	s	CAPACITOR,CERAMIC 0.1MF/25V F
C1565	1-164-156-11	s	CAPACITOR,CERAMIC 0.1MF/25V F
C1568	1-164-156-11	s	CAPACITOR,CERAMIC 0.1MF/25V F
C1569	1-164-156-11	s	CAPACITOR,CERAMIC 0.1MF/25V F
C1570	1-115-416-11	s	CAPACITOR,CERAMIC 1000PF/25V
C1571	1-115-416-11	s	CAPACITOR,CERAMIC 1000PF/25V
C1572	1-164-156-11	s	CAPACITOR,CERAMIC 0.1MF/25V F
C1573	1-164-156-11	s	CAPACITOR,CERAMIC 0.1MF/25V F
C1575	1-126-206-11	s	CAPACITOR, ELECT 100MF/6.3V
C1577	1-164-156-11	s	CAPACITOR,CERAMIC 0.1MF/25V F
C1578	1-164-156-11	s	CAPACITOR,CERAMIC 0.1MF/25V F
C1579	1-162-919-11	s	CAPACITOR,CERAMIC 22PF/50V CH
C1590	1-135-870-91	s	CAPACITOR, TANTALUM 2.2/16V
C1591	1-135-870-91	s	CAPACITOR, TANTALUM 2.2/16V
C2000	1-161-772-11	s	CAPACITOR,CERAMIC 0.1MF/25V
CN700	1-580-789-21	o	PIN,CONNECTOR (SMD) 6P
D900	8-719-820-41	s	DIODE 1SS302
D901	8-719-820-41	s	DIODE 1SS302
D903	8-719-820-41	s	DIODE 1SS302
D1100	8-719-023-69	s	DIODE SB007T03Q
D1101	8-719-820-41	s	DIODE 1SS302
D1102	8-719-820-41	s	DIODE 1SS302
D1200	8-719-820-41	s	DIODE 1SS302
D1201	8-719-820-41	s	DIODE 1SS302
D1203	8-719-023-69	s	DIODE SB007T03Q
D1204	8-719-820-41	s	DIODE 1SS302
D1401	8-719-820-41	s	DIODE 1SS302
F1500	⚠ 1-533-627-21	s	FUSE CHIP 5A/125V (6125)

(VPR-64A BOARD [SUFFIX 15] for HDW and MSW PLAYER)

Ref. No. or Q'ty	Part No.	SP	Description
F1501	⚠ 1-533-627-21	s	FUSE CHIP 5A/125V (6125)
F1502	⚠ 1-533-627-21	s	FUSE CHIP 5A/125V (6125)
FB1	1-469-094-11	s	FERRITE, EMI (SMD)
FB1201	1-469-094-11	s	FERRITE, EMI (SMD)
FB1204	1-469-094-11	s	FERRITE, EMI (SMD)
FB1207	1-469-094-11	s	FERRITE, EMI (SMD)
FL700	1-233-674-21	s	FILTER, EMI
FL701	1-233-674-21	s	FILTER, EMI
FL702	1-233-674-21	s	FILTER, EMI
FL703	1-233-674-21	s	FILTER, EMI
FL800	1-233-674-21	s	FILTER, EMI
FL801	1-233-674-21	s	FILTER, EMI
FL802	1-233-674-21	s	FILTER, EMI
FL900	1-239-721-11	s	FILTER, LOW PASS (6MHZ)
FL901	1-239-721-11	s	FILTER, LOW PASS (6MHZ)
FL902	1-239-721-11	s	FILTER, LOW PASS (6MHZ)
FL903	1-239-721-11	s	FILTER, LOW PASS (6MHZ)
FL1400	1-233-674-21	s	FILTER, EMI
FL1401	1-233-674-21	s	FILTER, EMI
FL1402	1-233-674-21	s	FILTER, EMI
FL1403	1-233-674-21	s	FILTER, EMI
FL1404	1-233-674-21	s	FILTER, EMI
FL1405	1-233-674-21	s	FILTER, EMI
FL1406	1-239-898-22	s	FILTER, EMI (SMD)
FL1407	1-239-898-22	s	FILTER, EMI (SMD)
FL1408	1-239-898-22	s	FILTER, EMI (SMD)
FL1409	1-239-898-22	s	FILTER, EMI (SMD)
FL1410	1-239-898-22	s	FILTER, EMI (SMD)
FL1411	1-239-898-22	s	FILTER, EMI (SMD)
FL1412	1-239-898-22	s	FILTER, EMI (SMD)
FL1413	1-239-898-22	s	FILTER, EMI (SMD)
FL1414	1-233-674-21	s	FILTER, EMI
FL1415	1-239-898-22	s	FILTER, EMI (SMD)
IC509	8-759-196-96	s	IC TC7SH08FU (TE85R)
IC702	8-759-549-01	s	IC SN74LV125APWR
IC703	8-759-524-52	s	IC TC74VHC574FT(EL)
IC704	8-759-524-52	s	IC TC74VHC574FT(EL)
IC705	8-759-524-52	s	IC TC74VHC574FT(EL)
IC707	8-759-639-85	s	IC SN65LVDS31DR
IC708	8-759-392-77	s	IC SN74LVC245APW (E20)
IC709	8-759-392-77	s	IC SN74LVC245APW (E20)
IC710	8-759-392-77	s	IC SN74LVC245APW (E20)
IC711	8-759-392-77	s	IC SN74LVC245APW (E20)
IC712	8-759-524-10	s	IC TC74VHC157FT (EL)
IC713	6-701-068-01	s	IC SI-3018LSA-TL
IC715	6-802-600-02	s	IC XC18V02-VPR64-V209
IC716	8-759-524-27	s	IC TC74VHC244FT(EL)
IC717	8-759-271-86	s	IC TC7SH04FU
IC801	8-759-524-52	s	IC TC74VHC574FT(EL)
IC802	8-759-524-52	s	IC TC74VHC574FT(EL)
IC803	8-759-524-52	s	IC TC74VHC574FT(EL)
IC804	8-759-524-52	s	IC TC74VHC574FT(EL)
IC805	8-759-524-52	s	IC TC74VHC574FT(EL)
IC806	6-702-238-11	s	IC HY57V643220CT-7TR
IC807	6-702-238-11	s	IC HY57V643220CT-7TR
IC808	6-702-238-11	s	IC HY57V643220CT-7TR
IC809	8-759-392-77	s	IC SN74LVC245APW (E20)
IC810	8-759-392-77	s	IC SN74LVC245APW (E20)

(VPR-64A BOARD [SUFFIX 15] for HDW and MSW PLAYER)

Ref. No. or Q'ty	Part No.	SP	Description
IC811	8-759-392-77	s	IC SN74LVC245APW (E20)
IC813	6-702-238-11	s	IC HY57V643220CT-7TR
IC901	8-759-589-47	s	IC LP2986AIMM-3.3
IC902	8-759-654-93	s	IC CXD9100AR
IC903	8-759-542-87	s	IC S-80827ANUP-EDQ-T2
IC906	6-700-915-01	s	IC SN74AHCT04PWR
IC910	8-759-669-75	s	IC TLC2932IPWR
IC912	8-759-196-93	s	IC TC7SH00FU-TE85R
IC913	8-759-524-52	s	IC TC74VHC574FT(EL)
IC914	8-759-524-52	s	IC TC74VHC574FT(EL)
IC915	8-759-524-52	s	IC TC74VHC574FT(EL)
IC916	8-759-524-52	s	IC TC74VHC574FT(EL)
IC917	8-759-196-96	s	IC TC7SH08FU (TE85R)
IC918	8-759-082-60	s	IC TC7S66FU
IC919	8-759-669-73	s	IC TL082CPWR
IC920	8-752-357-63	s	IC CXD2308Q
IC922	8-759-573-91	s	IC AD8055ART-REEL7
IC923	8-759-573-91	s	IC AD8055ART-REEL7
IC924	8-759-573-91	s	IC AD8055ART-REEL7
IC925	8-759-573-91	s	IC AD8055ART-REEL7
IC926	6-701-524-01	s	IC SN74LS221DBR
IC927	8-759-564-49	s	IC TC7W53FU-TE12R
IC928	8-759-564-49	s	IC TC7W53FU-TE12R
IC929	8-759-564-49	s	IC TC7W53FU-TE12R
IC930	8-759-564-49	s	IC TC7W53FU-TE12R
IC931	8-759-669-73	s	IC TL082CPWR
IC932	8-759-669-73	s	IC TL082CPWR
IC933	8-759-669-73	s	IC TL082CPWR
IC934	8-759-669-73	s	IC TL082CPWR
IC935	8-759-573-91	s	IC AD8055ART-REEL7
IC936	8-752-068-24	s	IC CXA1450M-TH
IC937	8-759-573-91	s	IC AD8055ART-REEL7
IC938	8-759-573-91	s	IC AD8055ART-REEL7
IC939	8-759-573-91	s	IC AD8055ART-REEL7
IC940	8-759-573-91	s	IC AD8055ART-REEL7
IC941	8-759-573-91	s	IC AD8055ART-REEL7
IC943	8-759-196-93	s	IC TC7SH00FU-TE85R
IC944	8-759-549-01	s	IC SN74LV125APWR
IC945	8-759-564-49	s	IC TC7W53FU-TE12R
IC947	8-759-564-49	s	IC TC7W53FU-TE12R
IC949	8-759-157-17	s	IC PQ05SZ1U
IC950	8-759-539-89	s	IC LM2990SX-5.0
IC951	8-759-082-60	s	IC TC7S66FU
IC1100	8-759-533-85	s	IC L88M05T-FA-TL
IC1103	8-759-987-27	s	IC LM1881M
IC1104	8-759-392-77	s	IC SN74LVC245APW (E20)
IC1105	8-759-702-08	s	IC NJM360M
IC1107	8-759-702-08	s	IC NJM360M
IC1113	8-759-528-99	s	IC TC74VHC221AFT(EL)
IC1114	8-759-669-73	s	IC TL082CPWR
IC1117	8-759-523-81	s	IC TC74VHC08FT(EL)
IC1118	8-759-524-09	s	IC TC74VHC153FT (EL)
IC1119			
*b	6-700-352-01	s	IC SN74CBTLV3253PWR
*a	8-759-524-09	s	IC TC74VHC153FT (EL)
IC1120	8-759-833-99	s	IC MC74HC4052ADTR2
IC1121	8-759-392-77	s	IC SN74LVC245APW (E20)
IC1122	8-759-392-77	s	IC SN74LVC245APW (E20)
IC1123	8-759-549-15	s	IC SN74LV245APWR

(VPR-64A BOARD [SUFFIX 15] for HDW and MSW PLAYER)

Ref. No. or Q'ty	Part No.	SP	Description
IC1125	8-759-549-15	s	IC SN74LV245APWR
IC1126	8-759-549-01	s	IC SN74LV125APWR
IC1129	8-759-271-86	s	IC TC7SH04FU
IC1130	8-759-639-86	s	IC SN65LVDS32DR
IC1131	8-759-271-86	s	IC TC7SH04FU
IC1132	8-759-271-86	s	IC TC7SH04FU
IC1134	8-759-549-01	s	IC SN74LV125APWR
IC1135	8-759-271-86	s	IC TC7SH04FU
IC1136	8-759-082-60	s	IC TC7S66FU
IC1200	8-759-183-53	s	IC TL431CPK-E2
IC1201	8-759-669-75	s	IC TLC2932IPWR
IC1202	8-759-702-08	s	IC NJM360M
IC1204	8-759-702-08	s	IC NJM360M
IC1212	8-759-491-46	s	IC TC74VHCT04AFT (EL)
IC1214	8-759-669-74	s	IC TL084CPWR-12
IC1216	6-701-524-01	s	IC SN74LS221DBR
IC1220	6-701-524-01	s	IC SN74LS221DBR
IC1221	8-759-669-74	s	IC TL084CPWR-12
IC1230	8-759-669-75	s	IC TLC2932IPWR
IC1231	8-759-564-49	s	IC TC7W53FU-TE12R
IC1232	8-759-392-77	s	IC SN74LVC245APW (E20)
IC1234	8-759-392-77	s	IC SN74LVC245APW (E20)
IC1235	8-759-082-60	s	IC TC7S66FU
IC1236	8-759-082-60	s	IC TC7S66FU
IC1237	8-759-523-02	s	IC TC74HC4053AFT(EL)
IC1238	8-759-564-49	s	IC TC7W53FU-TE12R
IC1239	8-759-271-86	s	IC TC7SH04FU
IC1240	6-701-524-01	s	IC SN74LS221DBR
IC1241	8-759-196-96	s	IC TC7SH08FU (TE85R)
IC1243	6-700-915-01	s	IC SN74AHCT04PWR
IC1244	8-759-669-74	s	IC TL084CPWR-12
IC1245	8-759-491-46	s	IC TC74VHCT04AFT (EL)
IC1247	8-759-523-95	s	IC TC74VHC74FT(EL)
IC1248	8-759-523-96	s	IC TC74VHC86FT (EL)
IC1249	8-759-523-95	s	IC TC74VHC74FT(EL)
IC1250	6-701-524-01	s	IC SN74LS221DBR
IC1251	8-759-525-10	s	IC TC7SET08F(TE85L)
IC1252	8-759-271-86	s	IC TC7SH04FU
IC1253	8-759-524-10	s	IC TC74VHC157FT (EL)
IC1256	8-752-375-98	s	IC CXD2315Q
IC1406	8-759-392-77	s	IC SN74LVC245APW (E20)
IC1407	8-759-524-18	s	IC TC74VHC163FT(EL)
IC1408	8-759-549-15	s	IC SN74LV245APWR
IC1409	8-759-392-77	s	IC SN74LVC245APW (E20)
IC1413	8-759-523-95	s	IC TC74VHC74FT(EL)
IC1417	8-759-523-95	s	IC TC74VHC74FT(EL)
IC1418	8-759-392-77	s	IC SN74LVC245APW (E20)
IC1419	8-759-392-77	s	IC SN74LVC245APW (E20)
IC1420	8-759-392-77	s	IC SN74LVC245APW (E20)
IC1421	8-759-392-77	s	IC SN74LVC245APW (E20)
IC1422	8-759-392-77	s	IC SN74LVC245APW (E20)
IC1423	8-759-392-77	s	IC SN74LVC245APW (E20)
IC1426	8-759-523-78	s	IC TC74VHC00FT(EL)
IC1427	8-759-523-78	s	IC TC74VHC00FT(EL)
IC1428	8-759-523-78	s	IC TC74VHC00FT(EL)
IC1429	8-759-491-46	s	IC TC74VHCT04AFT (EL)
IC1430	8-759-523-81	s	IC TC74VHC08FT(EL)
IC1431	8-759-523-94	s	IC TC74VHC32FT(EL)
IC1432	8-759-549-15	s	IC SN74LV245APWR

(VPR-64A BOARD [SUFFIX 15] for HDW and MSW PLAYER)

Ref. No. or Q'ty	Part No.	SP	Description
IC1433	8-759-549-15	s	IC SN74LV245APWR
IC1434	8-759-523-95	s	IC TC74VHC74FT(EL)
IC1505	8-759-524-07	s	IC TC74VHC138FT(EL)
IC1509	8-752-392-03	s	IC CXD1095BR
IC1510	8-759-524-07	s	IC TC74VHC138FT(EL)
IC1511	8-759-549-15	s	IC SN74LV245APWR
IC1512	8-759-468-72	s	IC AK6420AM (E2)
IC1513	8-759-183-53	s	IC TL431CPK-E2
IC1514	8-759-539-53	s	IC MB90096PF-G-139-BND(ER)
IC1522	8-759-491-46	s	IC TC74VHCT04AFT (EL)
IC1525	8-759-491-47	s	IC TC74VHCT08FT (EL)
IC1526	8-759-490-42	s	IC TC74VHCT574AFT(EL)
IC1527	8-759-523-81	s	IC TC74VHC08FT(EL)
IC1528	8-759-196-96	s	IC TC7SH08FU (TE85R)
IC1529	8-759-271-86	s	IC TC7SH04FU
IC1530	8-759-491-46	s	IC TC74VHCT04AFT (EL)
IC1531	6-700-915-01	s	IC SN74AHCT04PWR
IC1532	8-759-549-15	s	IC SN74LV245APWR
IC1533	8-759-549-15	s	IC SN74LV245APWR
IC1534	8-759-549-15	s	IC SN74LV245APWR
IC1535	8-759-549-15	s	IC SN74LV245APWR
IC1536	8-759-578-68	s	IC SN74LVCC4245APWR
IC1537	8-759-578-68	s	IC SN74LVCC4245APWR
IC1538	8-759-523-94	s	IC TC74VHC32FT(EL)
IC1539	8-759-549-01	s	IC SN74LV125APWR
IC1540	8-759-536-93	s	IC M62371GP-600D
IC1541	8-759-523-81	s	IC TC74VHC08FT(EL)
IC1542	8-759-833-99	s	IC MC74HC4052ADTR2
IC1543	8-759-669-73	s	IC TL082CPWR
IC1544	8-759-523-94	s	IC TC74VHC32FT(EL)
IC1545	8-759-491-47	s	IC TC74VHCT08FT (EL)
IC1546	6-700-915-01	s	IC SN74AHCT04PWR
IC1547	6-700-915-01	s	IC SN74AHCT04PWR
IC1548	8-759-491-47	s	IC TC74VHCT08FT (EL)
L700	1-414-398-11	s	INDUCTOR (SMD) 10UH
L900	1-414-398-11	s	INDUCTOR (SMD) 10UH
L903	1-414-398-11	s	INDUCTOR (SMD) 10UH
L904	1-414-398-11	s	INDUCTOR (SMD) 10UH
L905	1-414-398-11	s	INDUCTOR (SMD) 10UH
L906	1-414-398-11	s	INDUCTOR (SMD) 10UH
L907	1-410-732-31	s	CHIP INDUCTOR 0.18UH (3225)
L908	1-410-732-31	s	CHIP INDUCTOR 0.18UH (3225)
L909	1-410-387-11	s	INDUCTOR,CHIP 33UH (3225)
L910	1-410-387-11	s	INDUCTOR,CHIP 33UH (3225)
L911	1-410-388-31	s	INDUCTOR,CHIP 39UH
L912	1-410-388-31	s	INDUCTOR,CHIP 39UH
L913	1-410-387-11	s	INDUCTOR,CHIP 33UH (3225)
L914	1-414-398-11	s	INDUCTOR (SMD) 10UH
L1100	1-410-393-11	s	INDUCTOR,CHIP 100UH (3225)
L1101	1-410-385-11	s	INDUCTOR,CHIP 22UH (3225)
L1102	1-410-388-31	s	INDUCTOR,CHIP 39UH
L1103	1-414-398-11	s	INDUCTOR (SMD) 10UH
L1104	1-414-398-11	s	INDUCTOR (SMD) 10UH
L1200	1-414-398-11	s	INDUCTOR (SMD) 10UH
L1201	1-414-398-11	s	INDUCTOR (SMD) 10UH
L1202	1-414-398-11	s	INDUCTOR (SMD) 10UH
L1203	1-414-398-11	s	INDUCTOR (SMD) 10UH
L1204	1-414-398-11	s	INDUCTOR (SMD) 10UH
L1205	1-410-393-11	s	INDUCTOR,CHIP 100UH (3225)

(VPR-64A BOARD [SUFFIX 15] for HDW and MSW PLAYER)

Ref. No. or Q'ty	Part No.	SP	Description
L1206	1-410-393-11	s	INDUCTOR,CHIP 100UH (3225)
OSC1	1-781-806-21	s	LITHIUM TANTALATE OSCILLATOR
Q700	8-729-029-14	s	TRANSISTOR DTC144EUA-T106
Q900	8-729-117-32	s	TRANSISTOR 2SC4177
Q901	8-729-117-32	s	TRANSISTOR 2SC4177
Q902	8-729-029-14	s	TRANSISTOR DTC144EUA-T106
Q903	8-729-029-14	s	TRANSISTOR DTC144EUA-T106
Q904	8-729-140-63	s	TRANSISTOR 2SA1611-M5M6
Q905	8-729-140-63	s	TRANSISTOR 2SA1611-M5M6
Q906	8-729-013-37	s	TRANSISTOR 2SC4213-AB-TE85L
Q907	8-729-013-37	s	TRANSISTOR 2SC4213-AB-TE85L
Q908	8-729-013-37	s	TRANSISTOR 2SC4213-AB-TE85L
Q909	8-729-013-37	s	TRANSISTOR 2SC4213-AB-TE85L
Q1100	8-729-140-63	s	TRANSISTOR 2SA1611-M5M6
Q1101	8-729-140-63	s	TRANSISTOR 2SA1611-M5M6
Q1102	8-729-143-07	s	TRANSISTOR 2SA1610-Y33
Q1103	8-729-143-07	s	TRANSISTOR 2SA1610-Y33
Q1104	8-729-117-32	s	TRANSISTOR 2SC4177
Q1105	8-729-117-32	s	TRANSISTOR 2SC4177
Q1106	8-729-029-14	s	TRANSISTOR DTC144EUA-T106
Q1107	8-729-029-14	s	TRANSISTOR DTC144EUA-T106
Q1200	8-729-140-63	s	TRANSISTOR 2SA1611-M5M6
Q1201	8-729-140-63	s	TRANSISTOR 2SA1611-M5M6
Q1204	8-729-117-32	s	TRANSISTOR 2SC4177
Q1205	8-729-117-32	s	TRANSISTOR 2SC4177
Q1206	8-729-140-63	s	TRANSISTOR 2SA1611-M5M6
Q1207	8-729-029-14	s	TRANSISTOR DTC144EUA-T106
Q1208	8-729-029-14	s	TRANSISTOR DTC144EUA-T106
Q1209	8-729-140-63	s	TRANSISTOR 2SA1611-M5M6
Q1210	8-729-140-63	s	TRANSISTOR 2SA1611-M5M6
Q1211	8-729-026-58	s	TRANSISTOR FMY3A-T148
Q1212	8-729-026-58	s	TRANSISTOR FMY3A-T148
Q1500	8-729-117-32	s	TRANSISTOR 2SC4177
Q1501	8-729-029-14	s	TRANSISTOR DTC144EUA-T106
Q1590	8-729-140-63	s	TRANSISTOR 2SA1611-M5M6
Q1591	8-729-045-53	s	TRANSISTOR SI4431DY-T1
R448	1-216-864-11	s	CONDUCTOR, CHIP (1608)
R596	1-218-684-11	s	RESISTOR,CHIP 470 1/16W (1608)
R700	1-218-676-11	s	RESISTOR,CHIP 220 1/16W(1608)
R701	1-218-668-11	s	RESISTOR,CHIP 100 1/16W (1608)
R703	1-218-716-11	s	RESISTOR,CHIP 10K 1/16W(1608)
R706	1-218-740-11	s	RESISTOR,CHIP 100K 1/16W(1608)
R708	1-218-668-11	s	RESISTOR,CHIP 100 1/16W (1608)
R711	1-218-740-11	s	RESISTOR,CHIP 100K 1/16W(1608)
R712	1-218-740-11	s	RESISTOR,CHIP 100K 1/16W(1608)
R713	1-218-740-11	s	RESISTOR,CHIP 100K 1/16W(1608)
R727	1-218-716-11	s	RESISTOR,CHIP 10K 1/16W(1608)
R729	1-216-864-11	s	CONDUCTOR, CHIP (1608)
R733	1-218-708-11	s	RESISTOR,CHIP 4.7K 1/16W(1608)
R734	1-218-680-11	s	RESISTOR,CHIP 330 1/16W(1608)
R735	1-218-708-11	s	RESISTOR,CHIP 4.7K 1/16W(1608)
R736	1-218-708-11	s	RESISTOR,CHIP 4.7K 1/16W(1608)
R741	1-218-668-11	s	RESISTOR,CHIP 100 1/16W (1608)
R742	1-218-668-11	s	RESISTOR,CHIP 100 1/16W (1608)
R743	1-216-864-11	s	CONDUCTOR, CHIP (1608)
R752	1-216-864-11	s	CONDUCTOR, CHIP (1608)
R753	1-218-660-91	s	RESISTOR,CHIP 47 1/16W (1608)

(VPR-64A BOARD [SUFFIX 15] for HDW and MSW PLAYER)

Ref. No. or Q'ty	Part No.	SP	Description
R754	1-218-660-91	s	RESISTOR,CHIP 47 1/16W (1608)
R755	1-218-660-91	s	RESISTOR,CHIP 47 1/16W (1608)
R800	1-218-716-11	s	RESISTOR,CHIP 10K 1/16W(1608)
R801	1-218-716-11	s	RESISTOR,CHIP 10K 1/16W(1608)
R802	1-218-679-11	s	RESISTOR,CHIP 300 1/16W (1608)
R803	1-218-716-11	s	RESISTOR,CHIP 10K 1/16W(1608)
R804	1-218-716-11	s	RESISTOR,CHIP 10K 1/16W(1608)
R805	1-218-716-11	s	RESISTOR,CHIP 10K 1/16W(1608)
R806	1-218-660-91	s	RESISTOR,CHIP 47 1/16W (1608)
R807	1-218-676-11	s	RESISTOR,CHIP 220 1/16W(1608)
R901	1-218-752-11	s	RESISTOR,CHIP 330K 1/16W(1608)
R905	1-218-733-11	s	RESISTOR,CHIP 51K 1/16W (1608)
R906	1-218-698-11	s	RESISTOR,CHIP 1.8K 1/16W(1608)
R907	1-218-733-11	s	RESISTOR,CHIP 51K 1/16W (1608)
R908	1-218-723-11	s	RESISTOR,CHIP 20K 1/16W(1608)
R909	1-218-721-11	s	RESISTOR,CHIP 16K 1/16W(1608)
R910	1-218-723-11	s	RESISTOR,CHIP 20K 1/16W(1608)
R911	1-218-721-11	s	RESISTOR,CHIP 16K 1/16W(1608)
R912	1-218-732-11	s	RESISTOR,CHIP 47K 1/16W(1608)
R913	1-218-723-11	s	RESISTOR,CHIP 20K 1/16W(1608)
R914	1-218-721-11	s	RESISTOR,CHIP 16K 1/16W(1608)
R915	1-218-740-11	s	RESISTOR,CHIP 100K 1/16W(1608)
R916	1-216-864-11	s	CONDUCTOR, CHIP (1608)
R921	1-216-864-11	s	CONDUCTOR, CHIP (1608)
R924	1-218-668-11	s	RESISTOR,CHIP 100 1/16W (1608)
R925	1-218-668-11	s	RESISTOR,CHIP 100 1/16W (1608)
R926	1-218-668-11	s	RESISTOR,CHIP 100 1/16W (1608)
R927	1-218-668-11	s	RESISTOR,CHIP 100 1/16W (1608)
R932	1-218-702-11	s	RESISTOR CHIP 2.7K 1/16W(1608)
R933	1-218-702-11	s	RESISTOR CHIP 2.7K 1/16W(1608)
R934	1-218-702-11	s	RESISTOR CHIP 2.7K 1/16W(1608)
R935	1-218-668-11	s	RESISTOR,CHIP 100 1/16W (1608)
R938	1-216-864-11	s	CONDUCTOR, CHIP (1608)
R939	1-216-864-11	s	CONDUCTOR, CHIP (1608)
R953	1-218-716-11	s	RESISTOR,CHIP 10K 1/16W(1608)
R954	1-218-716-11	s	RESISTOR,CHIP 10K 1/16W(1608)
R955	1-216-853-11	s	RESISTOR,CHIP 470K 1/16W(1608)
R956	1-218-708-11	s	RESISTOR,CHIP 4.7K 1/16W(1608)
R957	1-218-652-11	s	RESISTOR,CHIP 22 1/16W (1608)
R960	1-218-716-11	s	RESISTOR,CHIP 10K 1/16W(1608)
R961	1-218-694-11	s	RESISTOR,CHIP 1.2K1/16W(1608)
R962	1-218-728-11	s	RESISTOR,CHIP 33K 1/16W
R963	1-218-720-11	s	RESISTOR,CHIP 15K 1/16W(1608)
R964	1-218-721-11	s	RESISTOR,CHIP 16K 1/16W(1608)
R965	1-216-857-11	s	RESISTOR,CHIP 1M 1/10W(1608)
R966	1-218-728-11	s	RESISTOR,CHIP 33K 1/16W
R967	1-218-720-11	s	RESISTOR,CHIP 15K 1/16W(1608)
R968	1-218-721-11	s	RESISTOR,CHIP 16K 1/16W(1608)
R969	1-218-737-11	s	RESISTOR,CHIP 75K 1/16W
R970	1-218-720-11	s	RESISTOR,CHIP 15K 1/16W(1608)
R971	1-218-719-11	s	RESISTOR,METAL 13K 1/16
R972	1-218-668-11	s	RESISTOR,CHIP 100 1/16W (1608)
R975	1-218-698-11	s	RESISTOR,CHIP 1.8K 1/16W(1608)
R976	1-218-698-11	s	RESISTOR,CHIP 1.8K 1/16W(1608)
R977	1-218-694-11	s	RESISTOR,CHIP 1.2K1/16W(1608)
R979	1-218-680-11	s	RESISTOR,CHIP 330 1/16W(1608)
R980	1-218-708-11	s	RESISTOR,CHIP 4.7K 1/16W(1608)
R981	1-218-668-11	s	RESISTOR,CHIP 100 1/16W (1608)
R982	1-218-672-11	s	RESISTOR,CHIP 150 1/16W(1608)

(VPR-64A BOARD [SUFFIX 15] for HDW and MSW PLAYER)

Ref. No. or Q'ty	Part No.	SP	Description
R983	1-218-672-11	s	RESISTOR,CHIP 150 1/16W(1608)
R984	1-218-672-11	s	RESISTOR,CHIP 150 1/16W(1608)
R985	1-218-672-11	s	RESISTOR,CHIP 150 1/16W(1608)
R986	1-218-672-11	s	RESISTOR,CHIP 150 1/16W(1608)
R987	1-218-672-11	s	RESISTOR,CHIP 150 1/16W(1608)
R988	1-218-672-11	s	RESISTOR,CHIP 150 1/16W(1608)
R989	1-218-672-11	s	RESISTOR,CHIP 150 1/16W(1608)
R990	1-218-650-11	s	RESISTOR,CHIP 18 1/16W (1608)
R991	1-218-666-11	s	RESISTOR,CHIP 82 1/16W (1608)
R992	1-218-648-11	s	RESISTOR CHIP 15 1/16W(1608)
R993	1-218-648-11	s	RESISTOR CHIP 15 1/16W(1608)
R994	1-218-650-11	s	RESISTOR,CHIP 18 1/16W (1608)
R995	1-218-666-11	s	RESISTOR,CHIP 82 1/16W (1608)
R996	1-218-698-11	s	RESISTOR,CHIP 1.8K 1/16W(1608)
R997	1-218-695-11	s	RESISTOR,CHIP 1.3K 1/16W(1608)
R998	1-218-695-11	s	RESISTOR,CHIP 1.3K 1/16W(1608)
R999	1-218-698-11	s	RESISTOR,CHIP 1.8K 1/16W(1608)
R1000	1-218-672-11	s	RESISTOR,CHIP 150 1/16W(1608)
R1001	1-218-672-11	s	RESISTOR,CHIP 150 1/16W(1608)
R1002	1-218-672-11	s	RESISTOR,CHIP 150 1/16W(1608)
R1003	1-218-672-11	s	RESISTOR,CHIP 150 1/16W(1608)
R1004	1-218-672-11	s	RESISTOR,CHIP 150 1/16W(1608)
R1005	1-218-672-11	s	RESISTOR,CHIP 150 1/16W(1608)
R1006	1-218-672-11	s	RESISTOR,CHIP 150 1/16W(1608)
R1007	1-218-672-11	s	RESISTOR,CHIP 150 1/16W(1608)
R1008	1-218-708-11	s	RESISTOR,CHIP 4.7K 1/16W(1608)
R1009	1-218-716-11	s	RESISTOR,CHIP 10K 1/16W(1608)
R1010	1-218-708-11	s	RESISTOR,CHIP 4.7K 1/16W(1608)
R1011	1-218-730-11	s	RESISTOR METAL FILM CHIP 39K
R1012	1-218-708-11	s	RESISTOR,CHIP 4.7K 1/16W(1608)
R1013	1-218-730-11	s	RESISTOR METAL FILM CHIP 39K
R1014	1-218-708-11	s	RESISTOR,CHIP 4.7K 1/16W(1608)
R1015	1-218-716-11	s	RESISTOR,CHIP 10K 1/16W(1608)
R1016	1-218-703-11	s	RESISTOR,CHIP 3.0K 1/16(1608)
R1017	1-218-703-11	s	RESISTOR,CHIP 3.0K 1/16(1608)
R1018	1-218-703-11	s	RESISTOR,CHIP 3.0K 1/16(1608)
R1019	1-218-694-11	s	RESISTOR,CHIP 1.2K1/16W(1608)
R1020	1-218-694-11	s	RESISTOR,CHIP 1.2K1/16W(1608)
R1021	1-218-694-11	s	RESISTOR,CHIP 1.2K1/16W(1608)
R1022	1-218-694-11	s	RESISTOR,CHIP 1.2K1/16W(1608)
R1023	1-218-700-11	s	RESISTOR,CHIP 2.2K 1/16W(1608)
R1024	1-216-863-11	s	RESISTOR,CHIP 3.3M 1/16W 1608
R1025	1-216-863-11	s	RESISTOR,CHIP 3.3M 1/16W 1608
R1026	1-216-863-11	s	RESISTOR,CHIP 3.3M 1/16W 1608
R1027	1-216-863-11	s	RESISTOR,CHIP 3.3M 1/16W 1608
R1028	1-218-726-11	s	RESISTOR CHIP 27K 1/16W (1608)
R1029	1-218-692-11	s	RESISTOR,CHIP 1.0K 1/16W(1608)
R1030	1-218-712-11	s	RESISTOR,METAL 6.8K 1/16W
R1031	1-218-692-11	s	RESISTOR,CHIP 1.0K 1/16W(1608)
R1032	1-218-712-11	s	RESISTOR,METAL 6.8K 1/16W
R1033	1-218-692-11	s	RESISTOR,CHIP 1.0K 1/16W(1608)
R1034	1-218-712-11	s	RESISTOR,METAL 6.8K 1/16W
R1035	1-218-692-11	s	RESISTOR,CHIP 1.0K 1/16W(1608)
R1036	1-218-712-11	s	RESISTOR,METAL 6.8K 1/16W
R1037	1-218-720-11	s	RESISTOR,CHIP 15K 1/16W(1608)
R1039	1-218-694-11	s	RESISTOR,CHIP 1.2K1/16W(1608)
R1040	1-218-708-11	s	RESISTOR,CHIP 4.7K 1/16W(1608)
R1041	1-218-692-11	s	RESISTOR,CHIP 1.0K 1/16W(1608)
R1042	1-218-692-11	s	RESISTOR,CHIP 1.0K 1/16W(1608)

(VPR-64A BOARD [SUFFIX 15] for HDW and MSW PLAYER)

Ref. No. or Q'ty	Part No.	SP	Description
R1043	1-218-692-11	s	RESISTOR,CHIP 1.0K 1/16W(1608)
R1044	1-218-692-11	s	RESISTOR,CHIP 1.0K 1/16W(1608)
R1045	1-218-692-11	s	RESISTOR,CHIP 1.0K 1/16W(1608)
R1046	1-218-699-11	s	RESISTOR,CHIP 2.0K 1/16W(1608)
R1047	1-218-699-11	s	RESISTOR,CHIP 2.0K 1/16W(1608)
R1048	1-218-704-11	s	RESISTOR,CHIP 3.3K 1/16W(1608)
R1049	1-218-702-11	s	RESISTOR CHIP 2.7K 1/16W(1608)
R1050	1-218-702-11	s	RESISTOR CHIP 2.7K 1/16W(1608)
R1051	1-218-702-11	s	RESISTOR CHIP 2.7K 1/16W(1608)
R1052	1-218-692-11	s	RESISTOR,CHIP 1.0K 1/16W(1608)
R1053	1-218-692-11	s	RESISTOR,CHIP 1.0K 1/16W(1608)
R1054	1-218-692-11	s	RESISTOR,CHIP 1.0K 1/16W(1608)
R1055	1-218-699-11	s	RESISTOR,CHIP 2.0K 1/16W(1608)
R1056	1-218-699-11	s	RESISTOR,CHIP 2.0K 1/16W(1608)
R1057	1-218-699-11	s	RESISTOR,CHIP 2.0K 1/16W(1608)
R1058	1-218-699-11	s	RESISTOR,CHIP 2.0K 1/16W(1608)
R1061	1-218-665-11	s	RESISTOR,CHIP 75 1/16W (1608)
R1062	1-218-665-11	s	RESISTOR,CHIP 75 1/16W (1608)
R1063	1-218-665-11	s	RESISTOR,CHIP 75 1/16W (1608)
R1064	1-218-665-11	s	RESISTOR,CHIP 75 1/16W (1608)
R1065	1-218-665-11	s	RESISTOR,CHIP 75 1/16W (1608)
R1066	1-218-665-11	s	RESISTOR,CHIP 75 1/16W (1608)
R1069	1-218-668-11	s	RESISTOR,CHIP 100 1/16W (1608)
R1070	1-218-668-11	s	RESISTOR,CHIP 100 1/16W (1608)
R1072	1-218-660-91	s	RESISTOR,CHIP 47 1/16W (1608)
R1073	1-218-660-91	s	RESISTOR,CHIP 47 1/16W (1608)
R1074	1-218-668-11	s	RESISTOR,CHIP 100 1/16W (1608)
R1075	1-218-668-11	s	RESISTOR,CHIP 100 1/16W (1608)
R1076	1-218-668-11	s	RESISTOR,CHIP 100 1/16W (1608)
R1077	1-218-708-11	s	RESISTOR,CHIP 4.7K 1/16W(1608)
R1079	1-216-864-11	s	CONDUCTOR, CHIP (1608)
R1080	1-218-716-11	s	RESISTOR,CHIP 10K 1/16W(1608)
R1081	1-218-716-11	s	RESISTOR,CHIP 10K 1/16W(1608)
R1082	1-218-740-11	s	RESISTOR,CHIP 100K 1/16W(1608)
R1083	1-218-716-11	s	RESISTOR,CHIP 10K 1/16W(1608)
R1084	1-218-716-11	s	RESISTOR,CHIP 10K 1/16W(1608)
R1085	1-218-716-11	s	RESISTOR,CHIP 10K 1/16W(1608)
R1086	1-218-716-11	s	RESISTOR,CHIP 10K 1/16W(1608)
R1087	1-218-716-11	s	RESISTOR,CHIP 10K 1/16W(1608)
R1088	1-218-716-11	s	RESISTOR,CHIP 10K 1/16W(1608)
R1089	1-218-716-11	s	RESISTOR,CHIP 10K 1/16W(1608)
R1090	1-218-716-11	s	RESISTOR,CHIP 10K 1/16W(1608)
R1091	1-218-692-11	s	RESISTOR,CHIP 1.0K 1/16W(1608)
R1102	1-218-692-11	s	RESISTOR,CHIP 1.0K 1/16W(1608)
R1103	1-218-660-91	s	RESISTOR,CHIP 47 1/16W (1608)
R1104	1-218-690-11	s	RESISTOR,CHIP 820 1/16W (1608)
R1105	1-218-692-11	s	RESISTOR,CHIP 1.0K 1/16W(1608)
R1106	1-218-692-11	s	RESISTOR,CHIP 1.0K 1/16W(1608)
R1107	1-218-702-11	s	RESISTOR CHIP 2.7K 1/16W(1608)
R1108	1-218-676-11	s	RESISTOR,CHIP 220 1/16W(1608)
R1109	1-218-716-11	s	RESISTOR,CHIP 10K 1/16W(1608)
R1110	1-218-700-11	s	RESISTOR,CHIP 2.2K 1/16W(1608)
R1111	1-218-716-11	s	RESISTOR,CHIP 10K 1/16W(1608)
R1112	1-216-863-11	s	RESISTOR,CHIP 3.3M 1/16W 1608
R1113	1-216-863-11	s	RESISTOR,CHIP 3.3M 1/16W 1608
R1114	1-218-700-11	s	RESISTOR,CHIP 2.2K 1/16W(1608)
R1115	1-218-716-11	s	RESISTOR,CHIP 10K 1/16W(1608)
R1116	1-216-857-11	s	RESISTOR,CHIP 1M 1/10W(1608)
R1117	1-218-702-11	s	RESISTOR CHIP 2.7K 1/16W(1608)

(VPR-64A BOARD [SUFFIX 15] for HDW and MSW PLAYER)

Ref. No. or Q'ty	Part No.	SP	Description
R1118	1-218-699-11	s	RESISTOR,CHIP 2.0K 1/16W(1608)
R1119	1-218-704-11	s	RESISTOR,CHIP 3.3K 1/16W(1608)
R1120	1-218-692-11	s	RESISTOR,CHIP 1.0K 1/16W(1608)
R1121	1-218-700-11	s	RESISTOR,CHIP 2.2K 1/16W(1608)
R1122	1-218-708-11	s	RESISTOR,CHIP 4.7K 1/16W(1608)
R1124	1-218-692-11	s	RESISTOR,CHIP 1.0K 1/16W(1608)
R1126	1-218-692-11	s	RESISTOR,CHIP 1.0K 1/16W(1608)
R1127	1-218-694-11	s	RESISTOR,CHIP 1.2K1/16W(1608)
R1129	1-218-724-11	s	RESISTOR,CHIP 22K 1/16W(1608)
R1130	1-218-708-11	s	RESISTOR,CHIP 4.7K 1/16W(1608)
R1132	1-218-708-11	s	RESISTOR,CHIP 4.7K 1/16W(1608)
R1135	1-218-668-11	s	RESISTOR,CHIP 100 1/16W (1608)
R1136	1-218-668-11	s	RESISTOR,CHIP 100 1/16W (1608)
R1138	1-218-668-11	s	RESISTOR,CHIP 100 1/16W (1608)
R1139	1-218-692-11	s	RESISTOR,CHIP 1.0K 1/16W(1608)
R1140	1-218-692-11	s	RESISTOR,CHIP 1.0K 1/16W(1608)
R1141	1-218-692-11	s	RESISTOR,CHIP 1.0K 1/16W(1608)
R1142	1-218-692-11	s	RESISTOR,CHIP 1.0K 1/16W(1608)
R1148	1-218-668-11	s	RESISTOR,CHIP 100 1/16W (1608)
R1149	1-218-716-11	s	RESISTOR,CHIP 10K 1/16W(1608)
R1150	1-218-716-11	s	RESISTOR,CHIP 10K 1/16W(1608)
R1152	1-218-740-11	s	RESISTOR,CHIP 100K 1/16W(1608)
R1153	1-218-716-11	s	RESISTOR,CHIP 10K 1/16W(1608)
R1154	1-218-692-11	s	RESISTOR,CHIP 1.0K 1/16W(1608)
R1155	1-218-692-11	s	RESISTOR,CHIP 1.0K 1/16W(1608)
R1156	1-218-692-11	s	RESISTOR,CHIP 1.0K 1/16W(1608)
R1157	1-216-864-11	s	CONDUCTOR, CHIP (1608)
R1158	1-218-740-11	s	RESISTOR,CHIP 100K 1/16W(1608)
R1160	1-218-740-11	s	RESISTOR,CHIP 100K 1/16W(1608)
R1161	1-218-716-11	s	RESISTOR,CHIP 10K 1/16W(1608)
R1200	1-218-678-11	s	RESISTOR CHIP 270 1/16W (1608)
R1201	1-218-710-11	s	RESISTOR,CHIP 5.6K 1/16W(1608)
R1202	1-218-710-11	s	RESISTOR,CHIP 5.6K 1/16W(1608)
R1203	1-218-700-11	s	RESISTOR,CHIP 2.2K 1/16W(1608)
R1204	1-218-720-11	s	RESISTOR,CHIP 15K 1/16W(1608)
R1209	1-218-702-11	s	RESISTOR CHIP 2.7K 1/16W(1608)
R1210	1-216-864-11	s	CONDUCTOR, CHIP (1608)
R1211	1-216-864-11	s	CONDUCTOR, CHIP (1608)
R1212	1-216-864-11	s	CONDUCTOR, CHIP (1608)
R1213	1-218-708-11	s	RESISTOR,CHIP 4.7K 1/16W(1608)
R1214	1-216-864-11	s	CONDUCTOR, CHIP (1608)
R1215	1-216-864-11	s	CONDUCTOR, CHIP (1608)
R1216	1-216-864-11	s	CONDUCTOR, CHIP (1608)
R1217	1-216-864-11	s	CONDUCTOR, CHIP (1608)
R1218	1-216-864-11	s	CONDUCTOR, CHIP (1608)
R1219	1-216-864-11	s	CONDUCTOR, CHIP (1608)
R1220	1-216-864-11	s	CONDUCTOR, CHIP (1608)
R1221	1-216-864-11	s	CONDUCTOR, CHIP (1608)
R1222	1-216-864-11	s	CONDUCTOR, CHIP (1608)
R1226	1-218-660-91	s	RESISTOR,CHIP 47 1/16W (1608)
R1227	1-218-684-11	s	RESISTOR,CHIP 470 1/16W (1608)
R1231	1-218-716-11	s	RESISTOR,CHIP 10K 1/16W(1608)
R1232	1-218-716-11	s	RESISTOR,CHIP 10K 1/16W(1608)
R1236	1-218-734-11	s	RESISTOR,CHIP 56K 1/16W(1608)
R1237	1-216-864-11	s	CONDUCTOR, CHIP (1608)
R1238	1-218-684-11	s	RESISTOR,CHIP 470 1/16W (1608)
R1239	1-216-857-11	s	RESISTOR,CHIP 1M 1/10W(1608)
R1240	1-216-857-11	s	RESISTOR,CHIP 1M 1/10W(1608)
R1242	1-218-716-11	s	RESISTOR,CHIP 10K 1/16W(1608)

(VPR-64A BOARD [SUFFIX 15] for HDW and MSW PLAYER)

Ref. No. or Q'ty	Part No.	SP	Description
R1243	1-218-740-11	s	RESISTOR,CHIP 100K 1/16W(1608)
R1245	1-218-738-11	s	RESISTOR,CHIP 82K 1/16W(1608)
R1246	1-218-724-11	s	RESISTOR,CHIP 22K 1/16W(1608)
R1247	1-218-724-11	s	RESISTOR,CHIP 22K 1/16W(1608)
R1248	1-218-668-11	s	RESISTOR,CHIP 100 1/16W (1608)
R1249	1-216-859-11	s	RESISTOR,CHIP 1.5M 1/16W 1608
R1250	1-218-668-11	s	RESISTOR,CHIP 100 1/16W (1608)
R1252	1-218-732-11	s	RESISTOR,CHIP 47K 1/16W(1608)
R1253	1-218-692-11	s	RESISTOR,CHIP 1.0K 1/16W(1608)
R1254	1-218-708-11	s	RESISTOR,CHIP 4.7K 1/16W(1608)
R1256	1-216-853-11	s	RESISTOR,CHIP 470K 1/16W(1608)
R1257	1-218-723-11	s	RESISTOR,CHIP 20K 1/16W(1608)
R1258	1-218-700-11	s	RESISTOR,CHIP 2.2K 1/16W(1608)
R1259	1-218-708-11	s	RESISTOR,CHIP 4.7K 1/16W(1608)
R1260	1-218-727-11	s	RESISTOR,CHIP 30K 1/16W(1608)
R1261	1-218-684-11	s	RESISTOR,CHIP 470 1/16W (1608)
R1262	1-218-690-11	s	RESISTOR,CHIP 820 1/16W (1608)
R1263	1-216-857-11	s	RESISTOR,CHIP 1M 1/10W(1608)
R1264	1-218-660-91	s	RESISTOR,CHIP 47 1/16W (1608)
R1266	1-218-692-11	s	RESISTOR,CHIP 1.0K 1/16W(1608)
R1267	1-218-684-11	s	RESISTOR,CHIP 470 1/16W (1608)
R1269	1-218-716-11	s	RESISTOR,CHIP 10K 1/16W(1608)
R1270	1-218-716-11	s	RESISTOR,CHIP 10K 1/16W(1608)
R1271	1-218-716-11	s	RESISTOR,CHIP 10K 1/16W(1608)
R1272	1-218-728-11	s	RESISTOR,CHIP 33K 1/16W
R1274	1-218-736-11	s	RESISTOR,CHIP 68K 1/16W(1608)
R1275	1-218-684-11	s	RESISTOR,CHIP 470 1/16W (1608)
R1276	1-218-692-11	s	RESISTOR,CHIP 1.0K 1/16W(1608)
R1277	1-218-692-11	s	RESISTOR,CHIP 1.0K 1/16W(1608)
R1278	1-218-716-11	s	RESISTOR,CHIP 10K 1/16W(1608)
R1279	1-218-716-11	s	RESISTOR,CHIP 10K 1/16W(1608)
R1280	1-218-708-11	s	RESISTOR,CHIP 4.7K 1/16W(1608)
R1281	1-218-726-11	s	RESISTOR CHIP 27K 1/16W (1608)
R1282	1-218-660-91	s	RESISTOR,CHIP 47 1/16W (1608)
R1283	1-218-660-91	s	RESISTOR,CHIP 47 1/16W (1608)
R1284	1-218-700-11	s	RESISTOR,CHIP 2.2K 1/16W(1608)
R1285	1-218-713-11	s	RESISTOR,METAL 7.5K 1/16W
R1286	1-218-712-11	s	RESISTOR,METAL 6.8K 1/16W
R1287	1-218-719-11	s	RESISTOR,METAL 13K 1/16
R1288	1-218-668-11	s	RESISTOR,CHIP 100 1/16W (1608)
R1289	1-218-730-11	s	RESISTOR METAL FILM CHIP 39K
R1290	1-218-689-11	s	RESISTOR CHIP 750 1/16W (1608)
R1291	1-218-700-11	s	RESISTOR,CHIP 2.2K 1/16W(1608)
R1292	1-218-660-91	s	RESISTOR,CHIP 47 1/16W (1608)
R1293	1-218-740-11	s	RESISTOR,CHIP 100K 1/16W(1608)
R1294	1-218-716-11	s	RESISTOR,CHIP 10K 1/16W(1608)
R1295	1-218-740-11	s	RESISTOR,CHIP 100K 1/16W(1608)
R1296	1-218-724-11	s	RESISTOR,CHIP 22K 1/16W(1608)
R1297	1-218-722-11	s	RESISTOR, CHIP 18K 1/16W 1608
R1298	1-218-692-11	s	RESISTOR,CHIP 1.0K 1/16W(1608)
R1299	1-218-716-11	s	RESISTOR,CHIP 10K 1/16W(1608)
R1300	1-218-719-11	s	RESISTOR,METAL 13K 1/16
R1301	1-218-716-11	s	RESISTOR,CHIP 10K 1/16W(1608)
R1302	1-218-740-11	s	RESISTOR,CHIP 100K 1/16W(1608)
R1305	1-218-668-11	s	RESISTOR,CHIP 100 1/16W (1608)
R1310	1-218-723-11	s	RESISTOR,CHIP 20K 1/16W(1608)
R1311	1-218-723-11	s	RESISTOR,CHIP 20K 1/16W(1608)
R1312	1-218-917-11	s	RESISTOR,CHIP 820K 1/10W(1608)
R1313	1-218-917-11	s	RESISTOR,CHIP 820K 1/10W(1608)

(VPR-64A BOARD [SUFFIX 15] for HDW and MSW PLAYER)

Ref. No. or Q'ty	Part No.	SP	Description
R1314	1-216-857-11	s	RESISTOR,CHIP 1M 1/10W(1608)
R1315	1-218-668-11	s	RESISTOR,CHIP 100 1/16W (1608)
R1316	1-218-668-11	s	RESISTOR,CHIP 100 1/16W (1608)
R1317	1-218-668-11	s	RESISTOR,CHIP 100 1/16W (1608)
R1318	1-218-668-11	s	RESISTOR,CHIP 100 1/16W (1608)
R1319	1-218-668-11	s	RESISTOR,CHIP 100 1/16W (1608)
R1320	1-218-668-11	s	RESISTOR,CHIP 100 1/16W (1608)
R1321	1-218-668-11	s	RESISTOR,CHIP 100 1/16W (1608)
R1322	1-218-668-11	s	RESISTOR,CHIP 100 1/16W (1608)
R1323	1-218-668-11	s	RESISTOR,CHIP 100 1/16W (1608)
R1324	1-218-668-11	s	RESISTOR,CHIP 100 1/16W (1608)
R1325	1-218-739-11	s	RESISTOR,CHIP 91K 1/16W(1608)
R1326	1-218-739-11	s	RESISTOR,CHIP 91K 1/16W(1608)
R1327	1-218-716-11	s	RESISTOR,CHIP 10K 1/16W(1608)
R1328	1-218-716-11	s	RESISTOR,CHIP 10K 1/16W(1608)
R1329	1-218-668-11	s	RESISTOR,CHIP 100 1/16W (1608)
R1330	1-218-716-11	s	RESISTOR,CHIP 10K 1/16W(1608)
R1331	1-218-724-11	s	RESISTOR,CHIP 22K 1/16W(1608)
R1332	1-218-668-11	s	RESISTOR,CHIP 100 1/16W (1608)
R1333	1-218-668-11	s	RESISTOR,CHIP 100 1/16W (1608)
R1334	1-218-668-11	s	RESISTOR,CHIP 100 1/16W (1608)
R1336	1-216-864-11	s	CONDUCTOR, CHIP (1608)
R1337	1-218-652-11	s	RESISTOR,CHIP 22 1/16W (1608)
R1338	1-218-716-11	s	RESISTOR,CHIP 10K 1/16W(1608)
R1339	1-218-716-11	s	RESISTOR,CHIP 10K 1/16W(1608)
R1340	1-218-693-11	s	RESISTOR,CHIP 1.1K 1/16W(1608)
R1343	1-216-864-11	s	CONDUCTOR, CHIP (1608)
R1344	1-216-864-11	s	CONDUCTOR, CHIP (1608)
R1345	1-218-684-11	s	RESISTOR,CHIP 470 1/16W (1608)
R1346	1-218-735-11	s	RESISTOR CHIP 62K 1/16W(1608)
R1347	1-218-668-11	s	RESISTOR,CHIP 100 1/16W (1608)
R1348	1-218-668-11	s	RESISTOR,CHIP 100 1/16W (1608)
R1349	1-218-668-11	s	RESISTOR,CHIP 100 1/16W (1608)
R1350	1-218-668-11	s	RESISTOR,CHIP 100 1/16W (1608)
R1382	1-216-864-11	s	CONDUCTOR, CHIP (1608)
R1383	1-216-864-11	s	CONDUCTOR, CHIP (1608)
R1385	1-218-680-11	s	RESISTOR,CHIP 330 1/16W(1608)
R1386	1-218-692-11	s	RESISTOR,CHIP 1.0K 1/16W(1608)
R1387	1-218-692-11	s	RESISTOR,CHIP 1.0K 1/16W(1608)
R1388	1-218-704-11	s	RESISTOR,CHIP 3.3K 1/16W(1608)
R1389	1-218-700-11	s	RESISTOR,CHIP 2.2K 1/16W(1608)
R1390	1-218-705-11	s	RESISTOR,CHIP 3.6K 1/16W(1608)
R1392	1-216-864-11	s	CONDUCTOR, CHIP (1608)
R1393	1-218-660-91	s	RESISTOR,CHIP 47 1/16W (1608)
R1401	1-218-660-91	s	RESISTOR,CHIP 47 1/16W (1608)
R1402	1-216-864-11	s	CONDUCTOR, CHIP (1608)
R1403	1-218-660-91	s	RESISTOR,CHIP 47 1/16W (1608)
R1404	1-218-740-11	s	RESISTOR,CHIP 100K 1/16W(1608)
R1405	1-216-864-11	s	CONDUCTOR, CHIP (1608)
R1406	1-218-660-91	s	RESISTOR,CHIP 47 1/16W (1608)
R1407	1-218-684-11	s	RESISTOR,CHIP 470 1/16W (1608)
R1409	1-216-864-11	s	CONDUCTOR, CHIP (1608)
R1410	1-218-684-11	s	RESISTOR,CHIP 470 1/16W (1608)
R1411	1-218-684-11	s	RESISTOR,CHIP 470 1/16W (1608)
R1412	1-218-740-11	s	RESISTOR,CHIP 100K 1/16W(1608)
R1413	1-216-864-11	s	CONDUCTOR, CHIP (1608)
R1414	1-216-864-11	s	CONDUCTOR, CHIP (1608)
R1415	1-218-740-11	s	RESISTOR,CHIP 100K 1/16W(1608)
R1416	1-218-702-11	s	RESISTOR CHIP 2.7K 1/16W(1608)

(VPR-64A BOARD [SUFFIX 15] for HDW and MSW PLAYER)

Ref. No. or Q'ty	Part No.	SP	Description
R1419	1-218-702-11	s	RESISTOR CHIP 2.7K 1/16W(1608)
R1420	1-218-702-11	s	RESISTOR CHIP 2.7K 1/16W(1608)
R1421	1-218-740-11	s	RESISTOR,CHIP 100K 1/16W(1608)
R1422	1-216-864-11	s	CONDUCTOR, CHIP (1608)
R1423	1-218-716-11	s	RESISTOR,CHIP 10K 1/16W(1608)
R1424	1-218-684-11	s	RESISTOR,CHIP 470 1/16W (1608)
R1427	1-218-716-11	s	RESISTOR,CHIP 10K 1/16W(1608)
R1428	1-218-684-11	s	RESISTOR,CHIP 470 1/16W (1608)
R1429	1-218-716-11	s	RESISTOR,CHIP 10K 1/16W(1608)
R1430	1-218-684-11	s	RESISTOR,CHIP 470 1/16W (1608)
R1431	1-218-716-11	s	RESISTOR,CHIP 10K 1/16W(1608)
R1432	1-218-684-11	s	RESISTOR,CHIP 470 1/16W (1608)
R1433	1-218-668-11	s	RESISTOR,CHIP 100 1/16W (1608)
R1435	1-218-668-11	s	RESISTOR,CHIP 100 1/16W (1608)
R1436	1-218-668-11	s	RESISTOR,CHIP 100 1/16W (1608)
R1437	1-218-668-11	s	RESISTOR,CHIP 100 1/16W (1608)
R1438	1-218-684-11	s	RESISTOR,CHIP 470 1/16W (1608)
R1439	1-218-684-11	s	RESISTOR,CHIP 470 1/16W (1608)
R1440	1-218-660-91	s	RESISTOR,CHIP 47 1/16W (1608)
R1441	1-218-702-11	s	RESISTOR CHIP 2.7K 1/16W(1608)
R1442	1-218-716-11	s	RESISTOR,CHIP 10K 1/16W(1608)
R1443	1-218-668-11	s	RESISTOR,CHIP 100 1/16W (1608)
R1444	1-218-660-91	s	RESISTOR,CHIP 47 1/16W (1608)
R1445	1-218-660-91	s	RESISTOR,CHIP 47 1/16W (1608)
R1446	1-218-660-91	s	RESISTOR,CHIP 47 1/16W (1608)
R1447	1-218-660-91	s	RESISTOR,CHIP 47 1/16W (1608)
R1448	1-218-660-91	s	RESISTOR,CHIP 47 1/16W (1608)
R1449	1-218-660-91	s	RESISTOR,CHIP 47 1/16W (1608)
R1450	1-218-652-11	s	RESISTOR,CHIP 22 1/16W (1608)
R1451	1-218-740-11	s	RESISTOR,CHIP 100K 1/16W(1608)
R1452	1-216-864-11	s	CONDUCTOR, CHIP (1608)
R1453	1-216-864-11	s	CONDUCTOR, CHIP (1608)
R1454	1-216-864-11	s	CONDUCTOR, CHIP (1608)
R1455	1-216-864-11	s	CONDUCTOR, CHIP (1608)
R1456	1-216-864-11	s	CONDUCTOR, CHIP (1608)
R1457	1-218-660-91	s	RESISTOR,CHIP 47 1/16W (1608)
R1500	1-218-660-91	s	RESISTOR,CHIP 47 1/16W (1608)
R1501	1-218-716-11	s	RESISTOR,CHIP 10K 1/16W(1608)
R1502	1-218-668-11	s	RESISTOR,CHIP 100 1/16W (1608)
R1503	1-218-676-11	s	RESISTOR,CHIP 220 1/16W(1608)
R1504	1-218-676-11	s	RESISTOR,CHIP 220 1/16W(1608)
R1505	1-218-676-11	s	RESISTOR,CHIP 220 1/16W(1608)
R1506	1-218-676-11	s	RESISTOR,CHIP 220 1/16W(1608)
R1507	1-218-676-11	s	RESISTOR,CHIP 220 1/16W(1608)
R1508	1-218-676-11	s	RESISTOR,CHIP 220 1/16W(1608)
R1509	1-218-676-11	s	RESISTOR,CHIP 220 1/16W(1608)
R1510	1-218-676-11	s	RESISTOR,CHIP 220 1/16W(1608)
R1511	1-218-676-11	s	RESISTOR,CHIP 220 1/16W(1608)
R1512	1-218-676-11	s	RESISTOR,CHIP 220 1/16W(1608)
R1513	1-218-676-11	s	RESISTOR,CHIP 220 1/16W(1608)
R1514	1-218-676-11	s	RESISTOR,CHIP 220 1/16W(1608)
R1515	1-218-676-11	s	RESISTOR,CHIP 220 1/16W(1608)
R1516	1-218-676-11	s	RESISTOR,CHIP 220 1/16W(1608)
R1517	1-218-676-11	s	RESISTOR,CHIP 220 1/16W(1608)
R1518	1-218-676-11	s	RESISTOR,CHIP 220 1/16W(1608)
R1519	1-218-740-11	s	RESISTOR,CHIP 100K 1/16W(1608)
R1520	1-218-676-11	s	RESISTOR,CHIP 220 1/16W(1608)
R1521	1-216-864-11	s	CONDUCTOR, CHIP (1608)
R1522	1-216-864-11	s	CONDUCTOR, CHIP (1608)

(VPR-64A BOARD [SUFFIX 15] for HDW and MSW PLAYER)

Ref. No. or Q'ty	Part No.	SP	Description
R1523	1-216-864-11	s	CONDUCTOR, CHIP (1608)
R1524	1-218-732-11	s	RESISTOR,CHIP 47K 1/16W(1608)
R1525	1-218-682-11	s	RESISTOR,CHIP 390 1/16W (1608)
R1526	1-218-716-11	s	RESISTOR,CHIP 10K 1/16W(1608)
R1527	1-218-716-11	s	RESISTOR,CHIP 10K 1/16W(1608)
R1530	1-218-652-11	s	RESISTOR,CHIP 22 1/16W (1608)
R1531	1-218-652-11	s	RESISTOR,CHIP 22 1/16W (1608)
R1532	1-218-652-11	s	RESISTOR,CHIP 22 1/16W (1608)
R1533	1-218-652-11	s	RESISTOR,CHIP 22 1/16W (1608)
R1534	1-218-652-11	s	RESISTOR,CHIP 22 1/16W (1608)
R1535	1-218-652-11	s	RESISTOR,CHIP 22 1/16W (1608)
R1536	1-218-652-11	s	RESISTOR,CHIP 22 1/16W (1608)
R1537	1-218-652-11	s	RESISTOR,CHIP 22 1/16W (1608)
R1538	1-218-740-11	s	RESISTOR,CHIP 100K 1/16W(1608)
R1539	1-218-740-11	s	RESISTOR,CHIP 100K 1/16W(1608)
R1540	1-218-740-11	s	RESISTOR,CHIP 100K 1/16W(1608)
R1541	1-218-740-11	s	RESISTOR,CHIP 100K 1/16W(1608)
R1544	1-218-740-11	s	RESISTOR,CHIP 100K 1/16W(1608)
R1545	1-218-740-11	s	RESISTOR,CHIP 100K 1/16W(1608)
R1546	1-218-708-11	s	RESISTOR,CHIP 4.7K 1/16W(1608)
R1547	1-218-708-11	s	RESISTOR,CHIP 4.7K 1/16W(1608)
R1548	1-218-716-11	s	RESISTOR,CHIP 10K 1/16W(1608)
R1549	1-218-716-11	s	RESISTOR,CHIP 10K 1/16W(1608)
R1550	1-218-692-11	s	RESISTOR,CHIP 1.0K 1/16W(1608)
R1551	1-218-692-11	s	RESISTOR,CHIP 1.0K 1/16W(1608)
R1552	1-218-692-11	s	RESISTOR,CHIP 1.0K 1/16W(1608)
R1553	1-218-708-11	s	RESISTOR,CHIP 4.7K 1/16W(1608)
R1554	1-218-716-11	s	RESISTOR,CHIP 10K 1/16W(1608)
R1555	1-218-652-11	s	RESISTOR,CHIP 22 1/16W (1608)
R1556	1-218-660-91	s	RESISTOR,CHIP 47 1/16W (1608)
R1557	1-218-740-11	s	RESISTOR,CHIP 100K 1/16W(1608)
R1558	1-216-864-11	s	CONDUCTOR, CHIP (1608)
R1590	1-218-692-11	s	RESISTOR,CHIP 1.0K 1/16W(1608)
R1591	1-218-692-11	s	RESISTOR,CHIP 1.0K 1/16W(1608)
R1592	1-218-680-11	s	RESISTOR,CHIP 330 1/16W(1608)
R1593	1-218-680-11	s	RESISTOR,CHIP 330 1/16W(1608)
R1594	1-218-716-11	s	RESISTOR,CHIP 10K 1/16W(1608)
RB700	1-239-416-11	s	NETWORK,RESISTOR 220 (1608)
RB701	1-239-416-11	s	NETWORK,RESISTOR 220 (1608)
RB702	1-239-416-11	s	NETWORK,RESISTOR 220 (1608)
RB703	1-239-416-11	s	NETWORK,RESISTOR 220 (1608)
RB704	1-239-416-11	s	NETWORK,RESISTOR 220 (1608)
RB705	1-239-416-11	s	NETWORK,RESISTOR 220 (1608)
RB719	1-236-908-11	s	RESISTOR,NETWORK 10K (3216)
RB720	1-236-908-11	s	RESISTOR,NETWORK 10K (3216)
RB800	1-239-416-11	s	NETWORK,RESISTOR 220 (1608)
RB801	1-239-416-11	s	NETWORK,RESISTOR 220 (1608)
RB802	1-239-416-11	s	NETWORK,RESISTOR 220 (1608)
RB803	1-239-416-11	s	NETWORK,RESISTOR 220 (1608)
RB804	1-239-416-11	s	NETWORK,RESISTOR 220 (1608)
RB805	1-239-416-11	s	NETWORK,RESISTOR 220 (1608)
RB806	1-239-416-11	s	NETWORK,RESISTOR 220 (1608)
RB807	1-239-416-11	s	NETWORK,RESISTOR 220 (1608)
RB808	1-239-416-11	s	NETWORK,RESISTOR 220 (1608)
RB809	1-239-416-11	s	NETWORK,RESISTOR 220 (1608)
RB1100	1-239-416-11	s	NETWORK,RESISTOR 220 (1608)
RB1101	1-239-416-11	s	NETWORK,RESISTOR 220 (1608)
RB1500	1-234-397-11	s	NETWORK, RES (8 GANG) 100K

(VPR-64A BOARD [SUFFIX 15] for HDW and MSW PLAYER)

Ref. No. or Q'ty	Part No.	SP	Description
RB1501	1-234-397-11	s	NETWORK, RES (8 GANG) 100K
RB1502	1-234-397-11	s	NETWORK, RES (8 GANG) 100K
RB1503	1-234-397-11	s	NETWORK, RES (8 GANG) 100K
RB1504	1-234-397-11	s	NETWORK, RES (8 GANG) 100K
RB1505	1-234-397-11	s	NETWORK, RES (8 GANG) 100K
RB1506	1-234-397-11	s	NETWORK, RES (8 GANG) 100K
RB1507	1-234-397-11	s	NETWORK, RES (8 GANG) 100K
RB1508	1-234-397-11	s	NETWORK, RES (8 GANG) 100K
RB1509	1-234-397-11	s	NETWORK, RES (8 GANG) 100K
THP100	1-809-357-21	s	THERMISTOR
X900	1-767-618-11	s	OSCILLATOR, CRYSTAL
X901	1-767-696-11	s	OSCILLATOR, CRYSTAL
X1203	1-767-695-11	s	OSCILLATOR, CRYSTAL
X1204	1-767-617-11	s	OSCILLATOR, CRYSTAL
X1205	1-767-619-11	s	OSCILLATOR, CRYSTAL

VPR-64A BOARD [SUFFIX 17-] for HDW and MSW PLAYER

[Lot No. 421 -] HDW-2000, M2000/P, M2100/P, A2100
[Lot No. 4C2 -] HDW-D2000
[Lot No. 462 -] HDW-S2000/P
[Lot No. 421 -] MSW-M2100/P
[Lot No. 495 -] MSW-M2100E/P

Ref. No. or Q'ty	Part No.	SP	Description
1pc	A-8327-279-D	s	MOUNTED CIRCUIT BOARD, VPR-64A
3pcs	3-191-747-11	o	SUPPORT (M3), HEXAGON
1pc	3-701-822-00	s	HOLDER, WIRE
6pcs	7-682-545-04	s	SCREW +B3X4
6pcs	7-682-902-11	s	SCREW +PWH 2.6X5
1pc	3-179-084-11	s	LEVER (R), C BOARD
1pc	3-179-085-11	s	LEVER (L), C BOARD
C700	1-131-992-11	s	CAP, CERAMIC 100000PF F 1608
C701	1-131-992-11	s	CAP, CERAMIC 100000PF F 1608
C702	1-131-992-11	s	CAP, CERAMIC 100000PF F 1608
C703	1-131-992-11	s	CAP, CERAMIC 100000PF F 1608
C704	1-131-992-11	s	CAP, CERAMIC 100000PF F 1608
C714	1-131-992-11	s	CAP, CERAMIC 100000PF F 1608
C715	1-131-992-11	s	CAP, CERAMIC 100000PF F 1608
C716	1-131-992-11	s	CAP, CERAMIC 100000PF F 1608
C717	1-131-992-11	s	CAP, CERAMIC 100000PF F 1608
C718	1-131-992-11	s	CAP, CERAMIC 100000PF F 1608
C719	1-131-992-11	s	CAP, CERAMIC 100000PF F 1608
C720	1-131-992-11	s	CAP, CERAMIC 100000PF F 1608
C721	1-131-992-11	s	CAP, CERAMIC 100000PF F 1608
C722	1-131-992-11	s	CAP, CERAMIC 100000PF F 1608
C723	1-131-992-11	s	CAP, CERAMIC 100000PF F 1608
C724	1-131-992-11	s	CAP, CERAMIC 100000PF F 1608
C725	1-131-992-11	s	CAP, CERAMIC 100000PF F 1608
C726	1-131-992-11	s	CAP, CERAMIC 100000PF F 1608
C727	1-131-992-11	s	CAP, CERAMIC 100000PF F 1608
C728	1-131-992-11	s	CAP, CERAMIC 100000PF F 1608
C729	1-131-992-11	s	CAP, CERAMIC 100000PF F 1608
C730	1-131-992-11	s	CAP, CERAMIC 100000PF F 1608
C731	1-131-992-11	s	CAP, CERAMIC 100000PF F 1608
C732	1-131-992-11	s	CAP, CERAMIC 100000PF F 1608
C733	1-131-992-11	s	CAP, CERAMIC 100000PF F 1608
C734	1-131-992-11	s	CAP, CERAMIC 100000PF F 1608
C735	1-131-992-11	s	CAP, CERAMIC 100000PF F 1608
C736	1-127-760-11	s	CAPACITOR,CERAMIC 4.7MF/6.3V
C739	1-128-590-11	s	CAPACITOR ELECT 100MF/6.3V(105
C751	1-131-992-11	s	CAP, CERAMIC 100000PF F 1608
C752	1-131-992-11	s	CAP, CERAMIC 100000PF F 1608
C753	1-131-992-11	s	CAP, CERAMIC 100000PF F 1608
C754	1-131-992-11	s	CAP, CERAMIC 100000PF F 1608
C755	1-131-992-11	s	CAP, CERAMIC 100000PF F 1608
C756	1-131-992-11	s	CAP, CERAMIC 100000PF F 1608
C790	1-131-992-11	s	CAP, CERAMIC 100000PF F 1608
C791	1-131-992-11	s	CAP, CERAMIC 100000PF F 1608
C792	1-131-992-11	s	CAP, CERAMIC 100000PF F 1608
C793	1-131-992-11	s	CAP, CERAMIC 100000PF F 1608
C794	1-131-992-11	s	CAP, CERAMIC 100000PF F 1608
C795	1-131-992-11	s	CAP, CERAMIC 100000PF F 1608
C796	1-131-992-11	s	CAP, CERAMIC 100000PF F 1608
C797	1-131-992-11	s	CAP, CERAMIC 100000PF F 1608
C800	1-131-992-11	s	CAP, CERAMIC 100000PF F 1608
C801	1-131-992-11	s	CAP, CERAMIC 100000PF F 1608
C802	1-131-992-11	s	CAP, CERAMIC 100000PF F 1608
C803	1-131-992-11	s	CAP, CERAMIC 100000PF F 1608
C804	1-131-992-11	s	CAP, CERAMIC 100000PF F 1608

(VPR-64A BOARD [SUFFIX 17-] for HDW and MSW PLAYER)

Ref. No. or Q'ty	Part No.	SP	Description
C805	1-131-992-11	s	CAP, CERAMIC 100000PF F 1608
C806	1-131-992-11	s	CAP, CERAMIC 100000PF F 1608
C807	1-131-992-11	s	CAP, CERAMIC 100000PF F 1608
C808	1-131-992-11	s	CAP, CERAMIC 100000PF F 1608
C809	1-131-992-11	s	CAP, CERAMIC 100000PF F 1608
C810	1-131-992-11	s	CAP, CERAMIC 100000PF F 1608
C811	1-131-992-11	s	CAP, CERAMIC 100000PF F 1608
C812	1-131-992-11	s	CAP, CERAMIC 100000PF F 1608
C813	1-131-992-11	s	CAP, CERAMIC 100000PF F 1608
C814	1-131-992-11	s	CAP, CERAMIC 100000PF F 1608
C815	1-131-992-11	s	CAP, CERAMIC 100000PF F 1608
C816	1-131-992-11	s	CAP, CERAMIC 100000PF F 1608
C817	1-131-992-11	s	CAP, CERAMIC 100000PF F 1608
C818	1-131-992-11	s	CAP, CERAMIC 100000PF F 1608
C819	1-131-992-11	s	CAP, CERAMIC 100000PF F 1608
C820	1-131-992-11	s	CAP, CERAMIC 100000PF F 1608
C821	1-131-992-11	s	CAP, CERAMIC 100000PF F 1608
C822	1-131-992-11	s	CAP, CERAMIC 100000PF F 1608
C823	1-131-992-11	s	CAP, CERAMIC 100000PF F 1608
C824	1-131-992-11	s	CAP, CERAMIC 100000PF F 1608
C825	1-131-992-11	s	CAP, CERAMIC 100000PF F 1608
C826	1-131-992-11	s	CAP, CERAMIC 100000PF F 1608
C827	1-131-992-11	s	CAP, CERAMIC 100000PF F 1608
C828	1-131-992-11	s	CAP, CERAMIC 100000PF F 1608
C829	1-131-992-11	s	CAP, CERAMIC 100000PF F 1608
C838	1-131-992-11	s	CAP, CERAMIC 100000PF F 1608
C839	1-131-992-11	s	CAP, CERAMIC 100000PF F 1608
C840	1-131-992-11	s	CAP, CERAMIC 100000PF F 1608
C849	1-131-992-11	s	CAP, CERAMIC 100000PF F 1608
C850	1-131-992-11	s	CAP, CERAMIC 100000PF F 1608
C851	1-131-992-11	s	CAP, CERAMIC 100000PF F 1608
C852	1-131-992-11	s	CAP, CERAMIC 100000PF F 1608
C853	1-131-992-11	s	CAP, CERAMIC 100000PF F 1608
C854	1-131-992-11	s	CAP, CERAMIC 100000PF F 1608
C855	1-131-992-11	s	CAP, CERAMIC 100000PF F 1608
C856	1-131-992-11	s	CAP, CERAMIC 100000PF F 1608
C857	1-131-992-11	s	CAP, CERAMIC 100000PF F 1608
C858	1-131-992-11	s	CAP, CERAMIC 100000PF F 1608
C859	1-131-992-11	s	CAP, CERAMIC 100000PF F 1608
C860	1-131-992-11	s	CAP, CERAMIC 100000PF F 1608
C901	1-127-760-11	s	CAPACITOR,CERAMIC 4.7MF/6.3V
C904	1-128-590-11	s	CAPACITOR ELECT 100MF/6.3V(105
C905	1-128-590-11	s	CAPACITOR ELECT 100MF/6.3V(105
C907	1-131-992-11	s	CAP, CERAMIC 100000PF F 1608
C908	1-131-992-11	s	CAP, CERAMIC 100000PF F 1608
C911	1-131-992-11	s	CAP, CERAMIC 100000PF F 1608
C912	1-131-992-11	s	CAP, CERAMIC 100000PF F 1608
C915	1-131-992-11	s	CAP, CERAMIC 100000PF F 1608
C916	1-131-992-11	s	CAP, CERAMIC 100000PF F 1608
C917	1-131-992-11	s	CAP, CERAMIC 100000PF F 1608
C918	1-131-992-11	s	CAP, CERAMIC 100000PF F 1608
C919	1-131-992-11	s	CAP, CERAMIC 100000PF F 1608
C921	1-131-992-11	s	CAP, CERAMIC 100000PF F 1608
C923	1-131-992-11	s	CAP, CERAMIC 100000PF F 1608
C924	1-131-992-11	s	CAP, CERAMIC 100000PF F 1608
C925	1-131-992-11	s	CAP, CERAMIC 100000PF F 1608
C926	1-131-992-11	s	CAP, CERAMIC 100000PF F 1608
C927	1-131-992-11	s	CAP, CERAMIC 100000PF F 1608
C928	1-131-992-11	s	CAP, CERAMIC 100000PF F 1608

(VPR-64A BOARD [SUFFIX 17-] for HDW and MSW PLAYER)

Ref. No. or Q'ty	Part No.	SP	Description
C929	1-165-811-11	s	CAPACITOR CHIP CERAMIC 22MF B
C930	1-131-992-11	s	CAP, CERAMIC 100000PF F 1608
C931	1-131-992-11	s	CAP, CERAMIC 100000PF F 1608
C932	1-128-590-11	s	CAPACITOR ELECT 100MF/6.3V(105
C935	1-131-992-11	s	CAP, CERAMIC 100000PF F 1608
C937	1-127-760-11	s	CAPACITOR,CERAMIC 4.7MF/6.3V
C938	1-131-992-11	s	CAP, CERAMIC 100000PF F 1608
C940	1-131-992-11	s	CAP, CERAMIC 100000PF F 1608
C942	1-131-992-11	s	CAP, CERAMIC 100000PF F 1608
C944	1-131-992-11	s	CAP, CERAMIC 100000PF F 1608
C945	1-131-992-11	s	CAP, CERAMIC 100000PF F 1608
C947	1-128-451-11	s	CAPACITOR ELECT 22MF/16V(105C)
C948	1-131-992-11	s	CAP, CERAMIC 100000PF F 1608
C950	1-127-760-11	s	CAPACITOR,CERAMIC 4.7MF/6.3V
C952	1-131-992-11	s	CAP, CERAMIC 100000PF F 1608
C955	1-131-992-11	s	CAP, CERAMIC 100000PF F 1608
C956	1-131-992-11	s	CAP, CERAMIC 100000PF F 1608
C959	1-128-590-11	s	CAPACITOR ELECT 100MF/6.3V(105
C960	1-131-992-11	s	CAP, CERAMIC 100000PF F 1608
C961	1-131-992-11	s	CAP, CERAMIC 100000PF F 1608
C962	1-131-992-11	s	CAP, CERAMIC 100000PF F 1608
C963	1-131-992-11	s	CAP, CERAMIC 100000PF F 1608
C964	1-131-992-11	s	CAP, CERAMIC 100000PF F 1608
C968	1-131-992-11	s	CAP, CERAMIC 100000PF F 1608
C969	1-131-992-11	s	CAP, CERAMIC 100000PF F 1608
C970	1-131-992-11	s	CAP, CERAMIC 100000PF F 1608
C971	1-131-992-11	s	CAP, CERAMIC 100000PF F 1608
C972	1-131-992-11	s	CAP, CERAMIC 100000PF F 1608
C973	1-128-590-11	s	CAPACITOR ELECT 100MF/6.3V(105
C974	1-128-590-11	s	CAPACITOR ELECT 100MF/6.3V(105
C975	1-128-590-11	s	CAPACITOR ELECT 100MF/6.3V(105
C976	1-131-992-11	s	CAP, CERAMIC 100000PF F 1608
C977	1-131-992-11	s	CAP, CERAMIC 100000PF F 1608
C978	1-131-992-11	s	CAP, CERAMIC 100000PF F 1608
C979	1-162-965-11	s	CAPACITOR,CERAMIC 1500PF/50V B
C980	1-162-965-11	s	CAPACITOR,CERAMIC 1500PF/50V B
C981	1-162-914-11	s	CAPACITOR,CERAMIC 9PF/50V 1608
C982	1-162-914-11	s	CAPACITOR,CERAMIC 9PF/50V 1608
C983	1-162-965-11	s	CAPACITOR,CERAMIC 1500PF/50V B
C984	1-164-218-11	s	CAPACITOR,CERAMIC 180PF/50V CH
C985	1-162-965-11	s	CAPACITOR,CERAMIC 1500PF/50V B
C986	1-164-218-11	s	CAPACITOR,CERAMIC 180PF/50V CH
C987	1-162-908-11	s	CAPACITOR,CERAMIC 3PF/50V 1608
C988	1-162-908-11	s	CAPACITOR,CERAMIC 3PF/50V 1608
C989	1-162-908-11	s	CAPACITOR,CERAMIC 3PF/50V 1608
C990	1-162-909-11	s	CAPACITOR,CERAMIC 4PF/50V CH
C991	1-131-992-11	s	CAP, CERAMIC 100000PF F 1608
C992	1-162-910-11	s	CAPACITOR,CERAMIC 5PF/50V 1608
C996	1-131-992-11	s	CAP, CERAMIC 100000PF F 1608
C997	1-131-992-11	s	CAP, CERAMIC 100000PF F 1608
C998	1-131-992-11	s	CAP, CERAMIC 100000PF F 1608
C999	1-131-992-11	s	CAP, CERAMIC 100000PF F 1608
C1000	1-131-992-11	s	CAP, CERAMIC 100000PF F 1608
C1001	1-131-992-11	s	CAP, CERAMIC 100000PF F 1608
C1002	1-131-992-11	s	CAP, CERAMIC 100000PF F 1608
C1003	1-131-992-11	s	CAP, CERAMIC 100000PF F 1608
C1004	1-162-923-11	s	CAPACITOR,CERAMIC 47PF/50V CH
C1005	1-125-889-11	s	CAPACITOR, CERAMIC 2.2MF
C1006	1-125-889-11	s	CAPACITOR, CERAMIC 2.2MF

(VPR-64A BOARD [SUFFIX 17-] for HDW and MSW PLAYER)

Ref. No. or Q'ty	Part No.	SP	Description
C1007	1-125-889-11	s	CAPACITOR, CERAMIC 2.2MF
C1008	1-125-889-11	s	CAPACITOR, CERAMIC 2.2MF
C1014	1-162-927-11	s	CAPACITOR,CERAMIC 100PF/50V CH
C1015	1-127-573-11	s	CAPACITOR,CERAMIC 1MFB(2012)
C1016	1-127-573-11	s	CAPACITOR,CERAMIC 1MFB(2012)
C1017	1-127-573-11	s	CAPACITOR,CERAMIC 1MFB(2012)
C1018	1-127-573-11	s	CAPACITOR,CERAMIC 1MFB(2012)
C1019	1-162-910-11	s	CAPACITOR,CERAMIC 5PF/50V 1608
C1028	1-162-923-11	s	CAPACITOR,CERAMIC 47PF/50V CH
C1037	1-162-915-11	s	CAPACITOR,CERAMIC 10PF/50V CH
C1038	1-162-910-11	s	CAPACITOR,CERAMIC 5PF/50V 1608
C1039	1-131-992-11	s	CAP, CERAMIC 100000PF F 1608
C1040	1-131-992-11	s	CAP, CERAMIC 100000PF F 1608
C1041	1-162-910-11	s	CAPACITOR,CERAMIC 5PF/50V 1608
C1045	1-131-992-11	s	CAP, CERAMIC 100000PF F 1608
C1046	1-131-992-11	s	CAP, CERAMIC 100000PF F 1608
C1047	1-131-992-11	s	CAP, CERAMIC 100000PF F 1608
C1048	1-131-992-11	s	CAP, CERAMIC 100000PF F 1608
C1049	1-131-992-11	s	CAP, CERAMIC 100000PF F 1608
C1050	1-131-992-11	s	CAP, CERAMIC 100000PF F 1608
C1052	1-162-910-11	s	CAPACITOR,CERAMIC 5PF/50V 1608
C1053	1-162-910-11	s	CAPACITOR,CERAMIC 5PF/50V 1608
C1054	1-131-992-11	s	CAP, CERAMIC 100000PF F 1608
C1055	1-131-992-11	s	CAP, CERAMIC 100000PF F 1608
C1056	1-131-992-11	s	CAP, CERAMIC 100000PF F 1608
C1057	1-131-992-11	s	CAP, CERAMIC 100000PF F 1608
C1060	1-131-992-11	s	CAP, CERAMIC 100000PF F 1608
C1061	1-131-992-11	s	CAP, CERAMIC 100000PF F 1608
C1062	1-131-992-11	s	CAP, CERAMIC 100000PF F 1608
C1063	1-131-992-11	s	CAP, CERAMIC 100000PF F 1608
C1064	1-128-590-11	s	CAPACITOR ELECT 100MF/6.3V(105
C1065	1-128-590-11	s	CAPACITOR ELECT 100MF/6.3V(105
C1066	1-107-826-11	s	CAPACITOR,CHIP CERAMIC 0.1MF
C1067	1-107-826-11	s	CAPACITOR,CHIP CERAMIC 0.1MF
C1068	1-107-826-11	s	CAPACITOR,CHIP CERAMIC 0.1MF
C1069	1-162-923-11	s	CAPACITOR,CERAMIC 47PF/50V CH
C1070	1-135-341-11	s	CAPACITOR,SOLID ELECT 330MF
C1071	1-131-992-11	s	CAP, CERAMIC 100000PF F 1608
C1072	1-131-992-11	s	CAP, CERAMIC 100000PF F 1608
C1100	1-131-992-11	s	CAP, CERAMIC 100000PF F 1608
C1102	1-128-590-11	s	CAPACITOR ELECT 100MF/6.3V(105
C1103	1-128-590-11	s	CAPACITOR ELECT 100MF/6.3V(105
C1104	1-131-992-11	s	CAP, CERAMIC 100000PF F 1608
C1105	1-131-992-11	s	CAP, CERAMIC 100000PF F 1608
C1106	1-131-992-11	s	CAP, CERAMIC 100000PF F 1608
C1107	1-131-992-11	s	CAP, CERAMIC 100000PF F 1608
C1108	1-162-921-11	s	CAPACITOR,CERAMIC 33PF/50V CH
C1109	1-164-230-11	s	CAPACITOR,CERAMIC 220PF/50V
C1110	1-131-992-11	s	CAP, CERAMIC 100000PF F 1608
C1111	1-131-992-11	s	CAP, CERAMIC 100000PF F 1608
C1112	1-164-315-11	s	CAPACITOR,CERAMIC 470PF/50V CH
C1113	1-164-230-11	s	CAPACITOR,CERAMIC 220PF/50V
C1114	1-164-315-11	s	CAPACITOR,CERAMIC 470PF/50V CH
C1115	1-164-230-11	s	CAPACITOR,CERAMIC 220PF/50V
C1116	1-131-992-11	s	CAP, CERAMIC 100000PF F 1608
C1117	1-131-992-11	s	CAP, CERAMIC 100000PF F 1608
C1118	1-162-970-11	s	CAPACITOR CERAMIC 0.01MF/25V B
C1120	1-131-992-11	s	CAP, CERAMIC 100000PF F 1608
C1122	1-127-954-11	s	CAPACITOR,CHIP FILM 0.047MF

(VPR-64A BOARD [SUFFIX 17-] for HDW and MSW PLAYER)

Ref. No. or Q'ty	Part No.	SP	Description
C1123	1-131-992-11	s	CAP, CERAMIC 100000PF F 1608
C1124	1-131-992-11	s	CAP, CERAMIC 100000PF F 1608
C1125	1-131-992-11	s	CAP, CERAMIC 100000PF F 1608
C1126	1-131-992-11	s	CAP, CERAMIC 100000PF F 1608
C1127	1-131-992-11	s	CAP, CERAMIC 100000PF F 1608
C1128	1-162-911-11	s	CAPACITOR,CERAMIC 6PF/50V 1608
C1129	1-162-907-11	s	CAPACITOR,CERAMIC 2PF/50V(CK)
C1130	1-162-921-11	s	CAPACITOR,CERAMIC 33PF/50V CH
C1131	1-162-921-11	s	CAPACITOR,CERAMIC 33PF/50V CH
C1134	1-131-992-11	s	CAP, CERAMIC 100000PF F 1608
C1135	1-131-992-11	s	CAP, CERAMIC 100000PF F 1608
C1136	1-131-992-11	s	CAP, CERAMIC 100000PF F 1608
C1137	1-131-992-11	s	CAP, CERAMIC 100000PF F 1608
C1141	1-131-992-11	s	CAP, CERAMIC 100000PF F 1608
C1142	1-131-992-11	s	CAP, CERAMIC 100000PF F 1608
C1143	1-131-992-11	s	CAP, CERAMIC 100000PF F 1608
C1145	1-131-992-11	s	CAP, CERAMIC 100000PF F 1608
C1146	1-131-992-11	s	CAP, CERAMIC 100000PF F 1608
C1149	1-131-992-11	s	CAP, CERAMIC 100000PF F 1608
C1150	1-131-992-11	s	CAP, CERAMIC 100000PF F 1608
C1151	1-131-992-11	s	CAP, CERAMIC 100000PF F 1608
C1152	1-131-992-11	s	CAP, CERAMIC 100000PF F 1608
C1153	1-107-826-11	s	CAPACITOR,CHIP CERAMIC 0.1MF
C1154	1-107-826-11	s	CAPACITOR,CHIP CERAMIC 0.1MF
C1200	1-131-992-11	s	CAP, CERAMIC 100000PF F 1608
C1203	1-162-925-11	s	CAPACITOR,CERAMIC 68PF/50V CH
C1204	1-164-230-11	s	CAPACITOR,CERAMIC 220PF/50V
C1205	1-162-925-11	s	CAPACITOR,CERAMIC 68PF/50V CH
C1206	1-131-992-11	s	CAP, CERAMIC 100000PF F 1608
C1208	1-131-992-11	s	CAP, CERAMIC 100000PF F 1608
C1209	1-131-992-11	s	CAP, CERAMIC 100000PF F 1608
C1210	1-131-992-11	s	CAP, CERAMIC 100000PF F 1608
C1211	1-131-992-11	s	CAP, CERAMIC 100000PF F 1608
C1213	1-131-992-11	s	CAP, CERAMIC 100000PF F 1608
C1214	1-131-992-11	s	CAP, CERAMIC 100000PF F 1608
C1215	1-162-970-11	s	CAPACITOR CERAMIC 0.01MF/25V B
C1216	1-131-992-11	s	CAP, CERAMIC 100000PF F 1608
C1217	1-131-992-11	s	CAP, CERAMIC 100000PF F 1608
C1218	1-162-919-11	s	CAPACITOR,CERAMIC 22PF/50V CH
C1220	1-131-992-11	s	CAP, CERAMIC 100000PF F 1608
C1221	1-131-992-11	s	CAP, CERAMIC 100000PF F 1608
C1222	1-131-992-11	s	CAP, CERAMIC 100000PF F 1608
C1223	1-162-925-11	s	CAPACITOR,CERAMIC 68PF/50V CH
C1224	1-125-889-11	s	CAPACITOR, CERAMIC 2.2MF
C1225	1-164-230-11	s	CAPACITOR,CERAMIC 220PF/50V
C1227	1-162-925-11	s	CAPACITOR,CERAMIC 68PF/50V CH
C1228	1-162-925-11	s	CAPACITOR,CERAMIC 68PF/50V CH
C1229	1-131-992-11	s	CAP, CERAMIC 100000PF F 1608
C1231	1-131-992-11	s	CAP, CERAMIC 100000PF F 1608
C1232	1-131-992-11	s	CAP, CERAMIC 100000PF F 1608
C1233	1-131-992-11	s	CAP, CERAMIC 100000PF F 1608
C1234	1-131-992-11	s	CAP, CERAMIC 100000PF F 1608
C1235	1-131-992-11	s	CAP, CERAMIC 100000PF F 1608
C1236	1-131-992-11	s	CAP, CERAMIC 100000PF F 1608
C1237	1-131-992-11	s	CAP, CERAMIC 100000PF F 1608
C1238	1-115-412-11	s	CAPACITOR,CERAMIC 680PF/25V CH
C1239	1-131-992-11	s	CAP, CERAMIC 100000PF F 1608
C1241	1-131-992-11	s	CAP, CERAMIC 100000PF F 1608
C1242	1-162-927-11	s	CAPACITOR,CERAMIC 100PF/50V CH

(VPR-64A BOARD [SUFFIX 17-] for HDW and MSW PLAYER)

Ref. No. or Q'ty	Part No.	SP	Description
C1245	1-131-992-11	s	CAP, CERAMIC 100000PF F 1608
C1246	1-162-959-11	s	CAPACITOR,CERAMIC 330PF/50V SL
C1249	1-131-992-11	s	CAP, CERAMIC 100000PF F 1608
C1250	1-131-992-11	s	CAP, CERAMIC 100000PF F 1608
C1251	1-131-992-11	s	CAP, CERAMIC 100000PF F 1608
C1252	1-126-246-11	s	CAPACITOR ELECT 220MF/4V(CHIP)
C1254	1-126-246-11	s	CAPACITOR ELECT 220MF/4V(CHIP)
C1256	1-165-811-11	s	CAPACITOR CHIP CERAMIC 22MF B
C1258	1-131-992-11	s	CAP, CERAMIC 100000PF F 1608
C1259	1-131-992-11	s	CAP, CERAMIC 100000PF F 1608
C1261	1-131-992-11	s	CAP, CERAMIC 100000PF F 1608
C1265	1-131-992-11	s	CAP, CERAMIC 100000PF F 1608
C1266	1-131-992-11	s	CAP, CERAMIC 100000PF F 1608
C1267	1-131-992-11	s	CAP, CERAMIC 100000PF F 1608
C1272	1-131-992-11	s	CAP, CERAMIC 100000PF F 1608
C1273	1-131-992-11	s	CAP, CERAMIC 100000PF F 1608
C1274	1-131-992-11	s	CAP, CERAMIC 100000PF F 1608
C1275	1-131-992-11	s	CAP, CERAMIC 100000PF F 1608
C1276	1-131-992-11	s	CAP, CERAMIC 100000PF F 1608
C1277	1-131-992-11	s	CAP, CERAMIC 100000PF F 1608
C1278	1-131-992-11	s	CAP, CERAMIC 100000PF F 1608
C1279	1-131-992-11	s	CAP, CERAMIC 100000PF F 1608
C1280	1-131-992-11	s	CAP, CERAMIC 100000PF F 1608
C1281	1-131-992-11	s	CAP, CERAMIC 100000PF F 1608
C1282	1-131-992-11	s	CAP, CERAMIC 100000PF F 1608
C1283	1-131-992-11	s	CAP, CERAMIC 100000PF F 1608
C1284	1-131-992-11	s	CAP, CERAMIC 100000PF F 1608
C1285	1-131-992-11	s	CAP, CERAMIC 100000PF F 1608
C1286	1-131-992-11	s	CAP, CERAMIC 100000PF F 1608
C1287	1-131-992-11	s	CAP, CERAMIC 100000PF F 1608
C1288	1-131-992-11	s	CAP, CERAMIC 100000PF F 1608
C1289	1-131-992-11	s	CAP, CERAMIC 100000PF F 1608
C1290	1-131-992-11	s	CAP, CERAMIC 100000PF F 1608
C1291	1-131-992-11	s	CAP, CERAMIC 100000PF F 1608
C1292	1-131-992-11	s	CAP, CERAMIC 100000PF F 1608
C1293	1-131-992-11	s	CAP, CERAMIC 100000PF F 1608
C1294	1-131-992-11	s	CAP, CERAMIC 100000PF F 1608
C1295	1-131-992-11	s	CAP, CERAMIC 100000PF F 1608
C1296	1-131-992-11	s	CAP, CERAMIC 100000PF F 1608
C1297	1-131-992-11	s	CAP, CERAMIC 100000PF F 1608
C1298	1-131-992-11	s	CAP, CERAMIC 100000PF F 1608
C1299	1-131-992-11	s	CAP, CERAMIC 100000PF F 1608
C1300	1-131-992-11	s	CAP, CERAMIC 100000PF F 1608
C1301	1-131-992-11	s	CAP, CERAMIC 100000PF F 1608
C1302	1-131-992-11	s	CAP, CERAMIC 100000PF F 1608
C1303	1-164-227-11	s	CAPACITOR,CERAMIC 0.022MF/25V
C1304	1-164-227-11	s	CAPACITOR,CERAMIC 0.022MF/25V
C1305	1-162-927-11	s	CAPACITOR,CERAMIC 100PF/50V CH
C1306	1-131-992-11	s	CAP, CERAMIC 100000PF F 1608
C1307	1-131-992-11	s	CAP, CERAMIC 100000PF F 1608
C1308	1-131-992-11	s	CAP, CERAMIC 100000PF F 1608
C1309	1-162-927-11	s	CAPACITOR,CERAMIC 100PF/50V CH
C1310	1-162-927-11	s	CAPACITOR,CERAMIC 100PF/50V CH
C1311	1-164-380-11	s	CAPACITOR,CERAMIC 51PF CH (M-)
C1313	1-128-590-11	s	CAPACITOR ELECT 100MF/6.3V(105
C1314	1-128-590-11	s	CAPACITOR ELECT 100MF/6.3V(105
C1315	1-162-968-11	s	CAPACITOR,CERAMIC 4700PF/50V B
C1316	1-131-992-11	s	CAP, CERAMIC 100000PF F 1608
C1319	1-131-992-11	s	CAP, CERAMIC 100000PF F 1608

(VPR-64A BOARD [SUFFIX 17-] for HDW and MSW PLAYER)

Ref. No. or Q'ty	Part No.	SP	Description
C1320	1-131-992-11	s	CAP, CERAMIC 100000PF F 1608
C1321	1-131-992-11	s	CAP, CERAMIC 100000PF F 1608
C1322	1-131-992-11	s	CAP, CERAMIC 100000PF F 1608
C1323	1-131-992-11	s	CAP, CERAMIC 100000PF F 1608
C1324	1-131-992-11	s	CAP, CERAMIC 100000PF F 1608
C1325	1-131-992-11	s	CAP, CERAMIC 100000PF F 1608
C1326	1-128-590-11	s	CAPACITOR ELECT 100MF/6.3V(105
C1400	1-131-992-11	s	CAP, CERAMIC 100000PF F 1608
C1401	1-131-992-11	s	CAP, CERAMIC 100000PF F 1608
C1402	1-131-992-11	s	CAP, CERAMIC 100000PF F 1608
C1403	1-131-992-11	s	CAP, CERAMIC 100000PF F 1608
C1404	1-131-992-11	s	CAP, CERAMIC 100000PF F 1608
C1405	1-131-992-11	s	CAP, CERAMIC 100000PF F 1608
C1406	1-131-992-11	s	CAP, CERAMIC 100000PF F 1608
C1407	1-131-992-11	s	CAP, CERAMIC 100000PF F 1608
C1408	1-131-992-11	s	CAP, CERAMIC 100000PF F 1608
C1410	1-131-992-11	s	CAP, CERAMIC 100000PF F 1608
C1411	1-131-992-11	s	CAP, CERAMIC 100000PF F 1608
C1412	1-131-992-11	s	CAP, CERAMIC 100000PF F 1608
C1413	1-162-919-11	s	CAPACITOR,CERAMIC 22PF/50V CH
C1416	1-162-919-11	s	CAPACITOR,CERAMIC 22PF/50V CH
C1417	1-162-919-11	s	CAPACITOR,CERAMIC 22PF/50V CH
C1418	1-162-970-11	s	CAPACITOR CERAMIC 0.01MF/25V B
C1420	1-162-970-11	s	CAPACITOR CERAMIC 0.01MF/25V B
C1421	1-162-970-11	s	CAPACITOR CERAMIC 0.01MF/25V B
C1422	1-162-970-11	s	CAPACITOR CERAMIC 0.01MF/25V B
C1423	1-131-992-11	s	CAP, CERAMIC 100000PF F 1608
C1424	1-162-919-11	s	CAPACITOR,CERAMIC 22PF/50V CH
C1426	1-162-919-11	s	CAPACITOR,CERAMIC 22PF/50V CH
C1427	1-162-919-11	s	CAPACITOR,CERAMIC 22PF/50V CH
C1428	1-162-919-11	s	CAPACITOR,CERAMIC 22PF/50V CH
C1429	1-162-919-11	s	CAPACITOR,CERAMIC 22PF/50V CH
C1431	1-162-919-11	s	CAPACITOR,CERAMIC 22PF/50V CH
C1432	1-162-919-11	s	CAPACITOR,CERAMIC 22PF/50V CH
C1433	1-162-919-11	s	CAPACITOR,CERAMIC 22PF/50V CH
C1434	1-131-992-11	s	CAP, CERAMIC 100000PF F 1608
C1435	1-131-992-11	s	CAP, CERAMIC 100000PF F 1608
C1436	1-131-992-11	s	CAP, CERAMIC 100000PF F 1608
C1437	1-131-992-11	s	CAP, CERAMIC 100000PF F 1608
C1438	1-162-919-11	s	CAPACITOR,CERAMIC 22PF/50V CH
C1439	1-162-919-11	s	CAPACITOR,CERAMIC 22PF/50V CH
C1440	1-162-919-11	s	CAPACITOR,CERAMIC 22PF/50V CH
C1441	1-162-970-11	s	CAPACITOR CERAMIC 0.01MF/25V B
C1442	1-131-992-11	s	CAP, CERAMIC 100000PF F 1608
C1443	1-131-992-11	s	CAP, CERAMIC 100000PF F 1608
C1444	1-131-992-11	s	CAP, CERAMIC 100000PF F 1608
C1445	1-131-992-11	s	CAP, CERAMIC 100000PF F 1608
C1446	1-131-992-11	s	CAP, CERAMIC 100000PF F 1608
C1447	1-131-992-11	s	CAP, CERAMIC 100000PF F 1608
C1448	1-131-992-11	s	CAP, CERAMIC 100000PF F 1608
C1449	1-131-992-11	s	CAP, CERAMIC 100000PF F 1608
C1450	1-127-692-11	s	CAP, CHIP CERAMIC 10MF B 3216
C1451	1-131-992-11	s	CAP, CERAMIC 100000PF F 1608
C1452	1-131-992-11	s	CAP, CERAMIC 100000PF F 1608
C1505	1-104-607-11	s	CAPACITOR ELECT 47MF/16V(105C)
C1507	1-131-992-11	s	CAP, CERAMIC 100000PF F 1608
C1508	1-128-590-11	s	CAPACITOR ELECT 100MF/6.3V(105
C1509	1-131-992-11	s	CAP, CERAMIC 100000PF F 1608
C1510	1-104-607-11	s	CAPACITOR ELECT 47MF/16V(105C)

(VPR-64A BOARD [SUFFIX 17-] for HDW and MSW PLAYER)

Ref. No. or Q'ty	Part No.	SP	Description	
C1511	1-131-992-11	s	CAP, CERAMIC 100000PF F 1608	
C1534	1-131-992-11	s	CAP, CERAMIC 100000PF F 1608	
C1535	1-131-992-11	s	CAP, CERAMIC 100000PF F 1608	
C1536	1-131-992-11	s	CAP, CERAMIC 100000PF F 1608	
C1538	1-131-992-11	s	CAP, CERAMIC 100000PF F 1608	
C1539	1-131-992-11	s	CAP, CERAMIC 100000PF F 1608	
C1540	1-164-230-11	s	CAPACITOR,CERAMIC 220PF/50V	
C1541	1-131-992-11	s	CAP, CERAMIC 100000PF F 1608	
C1542	1-131-992-11	s	CAP, CERAMIC 100000PF F 1608	
C1543	1-131-992-11	s	CAP, CERAMIC 100000PF F 1608	
C1544	1-131-992-11	s	CAP, CERAMIC 100000PF F 1608	
C1545	1-131-992-11	s	CAP, CERAMIC 100000PF F 1608	
C1548	1-128-451-11	s	CAPACITOR ELECT 22MF/16V(105C)	
C1549	1-131-992-11	s	CAP, CERAMIC 100000PF F 1608	
C1550	1-131-992-11	s	CAP, CERAMIC 100000PF F 1608	
C1552	1-131-992-11	s	CAP, CERAMIC 100000PF F 1608	
C1555	1-131-992-11	s	CAP, CERAMIC 100000PF F 1608	
C1556	1-131-992-11	s	CAP, CERAMIC 100000PF F 1608	
C1559	1-131-992-11	s	CAP, CERAMIC 100000PF F 1608	
C1560	1-131-992-11	s	CAP, CERAMIC 100000PF F 1608	
C1561	1-131-992-11	s	CAP, CERAMIC 100000PF F 1608	
C1563	1-131-992-11	s	CAP, CERAMIC 100000PF F 1608	
C1565	1-131-992-11	s	CAP, CERAMIC 100000PF F 1608	
C1568	1-131-992-11	s	CAP, CERAMIC 100000PF F 1608	
C1569	1-131-992-11	s	CAP, CERAMIC 100000PF F 1608	
C1570	1-115-416-11	s	CAPACITOR,CERAMIC 1000PF/25V	
C1571	1-115-416-11	s	CAPACITOR,CERAMIC 1000PF/25V	
C1572	1-131-992-11	s	CAP, CERAMIC 100000PF F 1608	
C1573	1-131-992-11	s	CAP, CERAMIC 100000PF F 1608	
C1575	1-128-590-11	s	CAPACITOR ELECT 100MF/6.3V(105	
C1577	1-131-992-11	s	CAP, CERAMIC 100000PF F 1608	
C1578	1-131-992-11	s	CAP, CERAMIC 100000PF F 1608	
C1579	1-162-919-11	s	CAPACITOR,CERAMIC 22PF/50V CH	
C1590	1-125-889-11	s	CAPACITOR, CERAMIC 2.2MF	
C1591	1-125-889-11	s	CAPACITOR, CERAMIC 2.2MF	
CN700	1-580-789-91	s	PIN, CONNECTOR 6P	
D700	8-719-975-40	s	DIODE RB411D	(RECTI)
D900	8-719-820-41	s	DIODE 1SS302	
D901	8-719-820-41	s	DIODE 1SS302	
D902	8-719-975-40	s	DIODE RB411D	(RECTI)
D903	8-719-820-41	s	DIODE 1SS302	
D904	8-719-975-40	s	DIODE RB411D	(RECTI)
D1100	8-719-975-40	s	DIODE RB411D	(RECTI)
D1101	8-719-820-41	s	DIODE 1SS302	
D1103	8-719-975-40	s	DIODE RB411D	(RECTI)
D1200	8-719-820-41	s	DIODE 1SS302	
D1201	8-719-820-41	s	DIODE 1SS302	
D1203	8-719-975-40	s	DIODE RB411D	(RECTI)
D1204	8-719-975-40	s	DIODE RB411D	(RECTI)
D1205	8-719-975-40	s	DIODE RB411D	(RECTI)
D1401	8-719-820-41	s	DIODE 1SS302	
E700	1-535-877-22	s	CHIP,CHECKER (TEST POINT)	
E900	1-535-877-22	s	CHIP,CHECKER (TEST POINT)	
E1200	1-535-877-22	s	CHIP,CHECKER (TEST POINT)	
E1201	1-535-877-22	s	CHIP,CHECKER (TEST POINT)	
F1500	⚠ 1-533-627-21	s	FUSE CHIP 5A/125V (6125)	
F1501	⚠ 1-533-627-21	s	FUSE CHIP 5A/125V (6125)	
F1502	⚠ 1-533-627-21	s	FUSE CHIP 5A/125V (6125)	

(VPR-64A BOARD [SUFFIX 17-] for HDW and MSW PLAYER)

Ref. No. or Q'ty	Part No.	SP	Description
FB1	1-469-094-11	s	FERRITE, EMI (SMD)
FB1201	1-469-094-11	s	FERRITE, EMI (SMD)
FB1204	1-469-094-11	s	FERRITE, EMI (SMD)
FB1207	1-469-094-11	s	FERRITE, EMI (SMD)
FL700	1-233-674-21	s	FILTER, EMI
FL701	1-233-674-21	s	FILTER, EMI
FL702	1-233-674-21	s	FILTER, EMI
FL703	1-233-674-21	s	FILTER, EMI
FL800	1-233-674-21	s	FILTER, EMI
FL801	1-233-674-21	s	FILTER, EMI
FL802	1-233-674-21	s	FILTER, EMI
FL900	1-239-931-31	s	FILTER, LOW PASS (6MHZ)
FL901	1-239-931-31	s	FILTER, LOW PASS (6MHZ)
FL902	1-239-931-31	s	FILTER, LOW PASS (6MHZ)
FL903	1-239-931-31	s	FILTER, LOW PASS (6MHZ)
FL1400	1-233-674-21	s	FILTER, EMI
FL1401	1-233-674-21	s	FILTER, EMI
FL1402	1-233-674-21	s	FILTER, EMI
FL1403	1-233-674-21	s	FILTER, EMI
FL1404	1-233-674-21	s	FILTER, EMI
FL1405	1-233-674-21	s	FILTER, EMI
FL1406	1-239-898-22	s	FILTER, EMI (SMD)
FL1407	1-239-898-22	s	FILTER, EMI (SMD)
FL1408	1-239-898-22	s	FILTER, EMI (SMD)
FL1409	1-239-898-22	s	FILTER, EMI (SMD)
FL1410	1-239-898-22	s	FILTER, EMI (SMD)
FL1411	1-239-898-22	s	FILTER, EMI (SMD)
FL1412	1-239-898-22	s	FILTER, EMI (SMD)
FL1413	1-239-898-22	s	FILTER, EMI (SMD)
FL1414	1-233-674-21	s	FILTER, EMI
FL1415	1-239-898-22	s	FILTER, EMI (SMD)
IC104	6-705-028-01	s	IC LMH6502MAX
IC509	8-759-196-96	s	IC TC7SH08FU (TE85R)
IC702	8-759-549-01	s	IC SN74LV125APWR
IC703	8-759-524-52	s	IC TC74VHC574FT(EL)
IC704	8-759-524-52	s	IC TC74VHC574FT(EL)
IC705	8-759-524-52	s	IC TC74VHC574FT(EL)
IC707	8-759-639-85	s	IC SN65LVDS31DR
IC708	8-759-392-77	s	IC SN74LVC245APW (E20)
IC709	8-759-392-77	s	IC SN74LVC245APW (E20)
IC710	8-759-392-77	s	IC SN74LVC245APW (E20)
IC711	8-759-392-77	s	IC SN74LVC245APW (E20)
IC712	8-759-524-10	s	IC TC74VHC157FT (EL)
IC713	6-701-068-01	s	IC SI-3018LSA-TL
IC715	6-802-600-03	s	IC XC18V02-VPR64-V209
IC716	8-759-524-27	s	IC TC74VHC244FT(EL)
IC717	8-759-271-86	s	IC TC7SH04FU
IC801	8-759-524-52	s	IC TC74VHC574FT(EL)
IC802	8-759-524-52	s	IC TC74VHC574FT(EL)
IC803	8-759-524-52	s	IC TC74VHC574FT(EL)
IC804	8-759-524-52	s	IC TC74VHC574FT(EL)
IC805	8-759-524-52	s	IC TC74VHC574FT(EL)
IC806	6-705-983-01	s	IC IS42S32200B-6TL-TR
IC807	6-705-983-01	s	IC IS42S32200B-6TL-TR
IC808	6-705-983-01	s	IC IS42S32200B-6TL-TR
IC809	8-759-392-77	s	IC SN74LVC245APW (E20)
IC810	8-759-392-77	s	IC SN74LVC245APW (E20)

(VPR-64A BOARD [SUFFIX 17-] for HDW and MSW PLAYER)

Ref. No. or Q'ty	Part No.	SP	Description
IC811	8-759-392-77	s	IC SN74LVC245APW (E20)
IC813	6-705-983-01	s	IC IS42S32200B-6TL-TR
IC902	8-759-654-93	s	IC CXD9100AR
IC903	6-703-188-01	s	IC S-80827CNNB-B8MT2G
IC906	6-700-915-01	s	IC SN74AHCT04PWR
IC910	8-759-669-75	s	IC TLC2932IPWR
IC912	8-759-196-93	s	IC TC7SH00FU-TE85R
IC913	8-759-524-52	s	IC TC74VHC574FT(EL)
IC914	8-759-524-52	s	IC TC74VHC574FT(EL)
IC915	8-759-524-52	s	IC TC74VHC574FT(EL)
IC916	8-759-524-52	s	IC TC74VHC574FT(EL)
IC917	8-759-196-96	s	IC TC7SH08FU (TE85R)
IC918	8-759-082-60	s	IC TC7S66FU
IC919	8-759-669-73	s	IC TL082CPWR
IC920	8-752-357-63	s	IC CXD2308Q
IC922	8-759-573-91	s	IC AD8055ARTZ-REEL7
IC923	8-759-573-91	s	IC AD8055ARTZ-REEL7
IC924	8-759-573-91	s	IC AD8055ARTZ-REEL7
IC925	8-759-573-91	s	IC AD8055ARTZ-REEL7
IC926	6-701-524-01	s	IC SN74LS221DBR
IC927	8-759-564-49	s	IC TC7W53FU-TE12R
IC928	8-759-564-49	s	IC TC7W53FU-TE12R
IC929	8-759-564-49	s	IC TC7W53FU-TE12R
IC930	8-759-564-49	s	IC TC7W53FU-TE12R
IC931	8-759-669-73	s	IC TL082CPWR
IC932	8-759-669-73	s	IC TL082CPWR
IC933	8-759-669-73	s	IC TL082CPWR
IC934	8-759-669-73	s	IC TL082CPWR
IC935	8-759-573-91	s	IC AD8055ARTZ-REEL7
IC936	8-752-068-24	s	IC CXA1450M-TH
IC937	8-759-573-91	s	IC AD8055ARTZ-REEL7
IC938	8-759-573-91	s	IC AD8055ARTZ-REEL7
IC939	8-759-573-91	s	IC AD8055ARTZ-REEL7
IC940	8-759-573-91	s	IC AD8055ARTZ-REEL7
IC941	8-759-573-91	s	IC AD8055ARTZ-REEL7
IC943	8-759-196-93	s	IC TC7SH00FU-TE85R
IC944	8-759-549-01	s	IC SN74LV125APWR
IC945	8-759-564-49	s	IC TC7W53FU-TE12R
IC947	8-759-564-49	s	IC TC7W53FU-TE12R
IC949	8-759-533-85	s	IC L88M05T-FA-TL
IC950	6-701-871-11	s	IC TK72150MCL-G
IC951	8-759-082-60	s	IC TC7S66FU
IC952	6-700-399-01	s	IC UPC2925T-E1
IC1100	8-759-533-85	s	IC L88M05T-FA-TL
IC1101	6-701-871-11	s	IC TK72150MCL-G
IC1103	6-704-406-01	s	IC LM1881MX/NOPB
IC1104	8-759-392-77	s	IC SN74LVC245APW (E20)
IC1105	8-759-702-08	s	IC NJM360M
IC1107	8-759-702-08	s	IC NJM360M
IC1113	8-759-528-99	s	IC TC74VHC221AFT(EL)
IC1114	8-759-669-73	s	IC TL082CPWR
IC1117	8-759-523-81	s	IC TC74VHC08FT(EL)
IC1118	8-759-524-09	s	IC TC74VHC153FT (EL)
IC1119	6-700-352-01	s	IC SN74CBTLV3253PWR
IC1120	8-759-833-99	s	IC MC74HC4052ADTR2
IC1121	8-759-392-77	s	IC SN74LVC245APW (E20)
IC1122	8-759-392-77	s	IC SN74LVC245APW (E20)
IC1123	8-759-549-15	s	IC SN74LV245APWR
IC1125	8-759-549-15	s	IC SN74LV245APWR

(VPR-64A BOARD [SUFFIX 17-] for HDW and MSW PLAYER)

Ref. No. or Q'ty	Part No.	SP	Description
IC1126	8-759-549-01	s	IC SN74LV125APWR
IC1129	8-759-271-86	s	IC TC7SH04FU
IC1130	8-759-639-86	s	IC SN65LVDS32DR
IC1131	8-759-271-86	s	IC TC7SH04FU
IC1132	8-759-271-86	s	IC TC7SH04FU
IC1134	6-700-268-01	s	IC SN74CBTLV3125PWR
IC1200	8-759-183-53	s	IC TL431CPK-E2
IC1201	8-759-669-75	s	IC TLC2932IPWR
IC1202	8-759-702-08	s	IC NJM360M
IC1204	8-759-702-08	s	IC NJM360M
IC1212	8-759-491-46	s	IC TC74VHCT04AFT (EL)
IC1214	8-759-669-74	s	IC TL084CPWR-12
IC1216	6-701-524-01	s	IC SN74LS221DBR
IC1220	6-701-524-01	s	IC SN74LS221DBR
IC1221	8-759-669-74	s	IC TL084CPWR-12
IC1230	8-759-669-75	s	IC TLC2932IPWR
IC1231	8-759-564-49	s	IC TC7W53FU-TE12R
IC1232	8-759-392-77	s	IC SN74LVC245APW (E20)
IC1234	8-759-392-77	s	IC SN74LVC245APW (E20)
IC1235	8-759-082-60	s	IC TC7S66FU
IC1236	8-759-082-60	s	IC TC7S66FU
IC1237	8-759-523-02	s	IC TC74HC4053AFT(EL)
IC1238	8-759-564-49	s	IC TC7W53FU-TE12R
IC1239	8-759-271-86	s	IC TC7SH04FU
IC1240	6-701-524-01	s	IC SN74LS221DBR
IC1241	8-759-196-96	s	IC TC7SH08FU (TE85R)
IC1243	6-700-915-01	s	IC SN74AHCT04PWR
IC1244	8-759-669-74	s	IC TL084CPWR-12
IC1245	8-759-491-46	s	IC TC74VHCT04AFT (EL)
IC1247	8-759-523-95	s	IC TC74VHC74FT(EL)
IC1248	8-759-523-96	s	IC TC74VHC86FT (EL)
IC1249	8-759-523-95	s	IC TC74VHC74FT(EL)
IC1250	6-701-524-01	s	IC SN74LS221DBR
IC1251	8-759-453-97	s	IC TC7SET08FU-TE85R
IC1252	8-759-271-86	s	IC TC7SH04FU
IC1253	8-759-524-10	s	IC TC74VHC157FT (EL)
IC1256	8-752-375-98	s	IC CXD2315Q
IC1401	6-703-875-01	s	IC CDCVF2505PWR
IC1406	8-759-392-77	s	IC SN74LVC245APW (E20)
IC1407	8-759-524-18	s	IC TC74VHC163FT(EL)
IC1408	8-759-549-15	s	IC SN74LV245APWR
IC1409	8-759-392-77	s	IC SN74LVC245APW (E20)
IC1413	8-759-523-95	s	IC TC74VHC74FT(EL)
IC1417	8-759-523-95	s	IC TC74VHC74FT(EL)
IC1418	8-759-392-77	s	IC SN74LVC245APW (E20)
IC1419	8-759-392-77	s	IC SN74LVC245APW (E20)
IC1420	8-759-392-77	s	IC SN74LVC245APW (E20)
IC1421	8-759-392-77	s	IC SN74LVC245APW (E20)
IC1422	8-759-392-77	s	IC SN74LVC245APW (E20)
IC1423	8-759-392-77	s	IC SN74LVC245APW (E20)
IC1426	8-759-523-78	s	IC TC74VHC00FT(EL)
IC1427	8-759-523-78	s	IC TC74VHC00FT(EL)
IC1428	8-759-523-78	s	IC TC74VHC00FT(EL)
IC1429	8-759-491-46	s	IC TC74VHCT04AFT (EL)
IC1430	8-759-523-81	s	IC TC74VHC08FT(EL)
IC1431	8-759-523-94	s	IC TC74VHC32FT(EL)
IC1432	8-759-549-15	s	IC SN74LV245APWR
IC1433	8-759-549-15	s	IC SN74LV245APWR
IC1434	8-759-523-95	s	IC TC74VHC74FT(EL)

(VPR-64A BOARD [SUFFIX 17-] for HDW and MSW PLAYER)

Ref. No. or Q'ty	Part No.	SP	Description
IC1505	8-759-524-07	s	IC TC74VHC138FT(EL)
IC1509	8-752-392-03	s	IC CXD1095BR
IC1510	8-759-524-07	s	IC TC74VHC138FT(EL)
IC1511	8-759-549-15	s	IC SN74LV245APWR
IC1512	8-759-468-72	s	IC AK6420AM (E2)
IC1513	8-759-183-53	s	IC TL431CPK-E2
IC1514	8-759-539-53	s	IC MB90096PF-G-139-BND(ER)
IC1522	8-759-491-46	s	IC TC74VHCT04AFT (EL)
IC1525	8-759-491-47	s	IC TC74VHCT08FT (EL)
IC1526	8-759-490-42	s	IC TC74VHCT574AFT(EL)
IC1527	8-759-523-81	s	IC TC74VHC08FT(EL)
IC1528	8-759-196-96	s	IC TC7SH08FU (TE85R)
IC1529	8-759-271-86	s	IC TC7SH04FU
IC1530	8-759-491-46	s	IC TC74VHCT04AFT (EL)
IC1531	6-700-915-01	s	IC SN74AHCT04PWR
IC1532	8-759-549-15	s	IC SN74LV245APWR
IC1533	8-759-549-15	s	IC SN74LV245APWR
IC1534	8-759-549-15	s	IC SN74LV245APWR
IC1535	8-759-549-15	s	IC SN74LV245APWR
IC1536	8-759-578-68	s	IC SN74LVCC4245APWR
IC1537	8-759-578-68	s	IC SN74LVCC4245APWR
IC1538	8-759-523-94	s	IC TC74VHC32FT(EL)
IC1539	8-759-549-01	s	IC SN74LV125APWR
IC1540	8-759-536-93	s	IC M62371GP-600D
IC1541	8-759-523-81	s	IC TC74VHC08FT(EL)
IC1542	8-759-833-99	s	IC MC74HC4052ADTR2
IC1543	8-759-669-73	s	IC TL082CPWR
IC1544	8-759-523-94	s	IC TC74VHC32FT(EL)
IC1545	8-759-491-47	s	IC TC74VHCT08FT (EL)
IC1546	6-700-915-01	s	IC SN74AHCT04PWR
IC1547	6-700-915-01	s	IC SN74AHCT04PWR
IC1548	8-759-491-47	s	IC TC74VHCT08FT (EL)
L700	1-414-398-11	s	INDUCTOR (SMD) 10UH
L900	1-414-398-11	s	INDUCTOR (SMD) 10UH
L903	1-414-398-11	s	INDUCTOR (SMD) 10UH
L904	1-414-398-11	s	INDUCTOR (SMD) 10UH
L905	1-414-398-11	s	INDUCTOR (SMD) 10UH
L906	1-414-398-11	s	INDUCTOR (SMD) 10UH
L907	1-412-970-11	s	INDUCTOR (SMALL TYPE)
L908	1-412-970-11	s	INDUCTOR (SMALL TYPE)
L909	1-414-524-31	s	INDUCTOR, SMALL TYPE 33.0UF
L910	1-414-524-31	s	INDUCTOR, SMALL TYPE 33.0UF
L911	1-414-195-31	s	INDUCTOR, CHIP 39UH
L912	1-414-195-31	s	INDUCTOR, CHIP 39UH
L913	1-414-524-31	s	INDUCTOR, SMALL TYPE 33.0UF
L914	1-414-398-11	s	INDUCTOR (SMD) 10UH
L1100	1-414-170-41	s	INDUCTOR, CHIP 100UH (2012)
L1101	1-412-993-11	s	INDUCTOR (SMALL TYPE)
L1102	1-414-195-31	s	INDUCTOR, CHIP 39UH
L1104	1-414-398-11	s	INDUCTOR (SMD) 10UH
L1200	1-414-398-11	s	INDUCTOR (SMD) 10UH
L1201	1-414-398-11	s	INDUCTOR (SMD) 10UH
L1202	1-414-398-11	s	INDUCTOR (SMD) 10UH
L1203	1-414-398-11	s	INDUCTOR (SMD) 10UH
L1204	1-414-398-11	s	INDUCTOR (SMD) 10UH
L1205	1-414-757-11	s	INDUCTOR 100.0UH
L1206	1-414-757-11	s	INDUCTOR 100.0UH
Q700	8-729-928-81	s	TRANSISTOR DTC144EE

(VPR-64A BOARD [SUFFIX 17-] for HDW and MSW PLAYER)

Ref. No. or Q'ty	Part No.	SP	Description
Q900	8-729-117-32	s	TRANSISTOR 2SC4177
Q901	8-729-117-32	s	TRANSISTOR 2SC4177
Q902	8-729-928-81	s	TRANSISTOR DTC144EE
Q903	8-729-928-81	s	TRANSISTOR DTC144EE
Q904	8-729-140-63	s	TRANSISTOR 2SA1611-M5M6
Q905	8-729-140-63	s	TRANSISTOR 2SA1611-M5M6
Q906	8-729-013-37	s	TRANSISTOR 2SC4213-AB-TE85L
Q907	8-729-013-37	s	TRANSISTOR 2SC4213-AB-TE85L
Q908	8-729-013-37	s	TRANSISTOR 2SC4213-AB-TE85L
Q909	8-729-013-37	s	TRANSISTOR 2SC4213-AB-TE85L
Q1100	8-729-140-63	s	TRANSISTOR 2SA1611-M5M6
Q1101	8-729-140-63	s	TRANSISTOR 2SA1611-M5M6
Q1102	8-729-143-07	s	TRANSISTOR 2SA1610-Y33
Q1103	8-729-143-07	s	TRANSISTOR 2SA1610-Y33
Q1104	8-729-117-32	s	TRANSISTOR 2SC4177
Q1105	8-729-117-32	s	TRANSISTOR 2SC4177
Q1107	8-729-928-81	s	TRANSISTOR DTC144EE
Q1200	8-729-140-63	s	TRANSISTOR 2SA1611-M5M6
Q1201	8-729-140-63	s	TRANSISTOR 2SA1611-M5M6
Q1204	8-729-117-32	s	TRANSISTOR 2SC4177
Q1205	8-729-117-32	s	TRANSISTOR 2SC4177
Q1206	8-729-140-63	s	TRANSISTOR 2SA1611-M5M6
Q1207	8-729-928-81	s	TRANSISTOR DTC144EE
Q1208	8-729-928-81	s	TRANSISTOR DTC144EE
Q1209	8-729-140-63	s	TRANSISTOR 2SA1611-M5M6
Q1210	8-729-140-63	s	TRANSISTOR 2SA1611-M5M6
Q1211	8-729-013-28	s	TRANSISTOR HN1B01FU-TE85R
Q1212	8-729-013-28	s	TRANSISTOR HN1B01FU-TE85R
Q1500	8-729-117-32	s	TRANSISTOR 2SC4177
Q1501	8-729-928-81	s	TRANSISTOR DTC144EE
Q1590	8-729-140-63	s	TRANSISTOR 2SA1611-M5M6
Q1591	8-729-045-53	s	TRANSISTOR SI4431DY-T1
R448	1-216-864-11	s	CONDUCTOR, CHIP (1608)
R518	1-218-446-11	s	RESISTOR,CHIP 1 (1608)
R519	1-218-446-11	s	RESISTOR,CHIP 1 (1608)
R594	1-218-446-11	s	RESISTOR,CHIP 1 (1608)
R595	1-218-446-11	s	RESISTOR,CHIP 1 (1608)
R596	1-218-839-11	s	RESISTOR,CHIP 470 1/10W (1608)
R651	1-218-446-11	s	RESISTOR,CHIP 1 (1608)
R652	1-218-446-11	s	RESISTOR,CHIP 1 (1608)
R654	1-218-446-11	s	RESISTOR,CHIP 1 (1608)
R655	1-218-446-11	s	RESISTOR,CHIP 1 (1608)
R656	1-218-446-11	s	RESISTOR,CHIP 1 (1608)
R657	1-218-446-11	s	RESISTOR,CHIP 1 (1608)
R658	1-218-446-11	s	RESISTOR,CHIP 1 (1608)
R659	1-218-446-11	s	RESISTOR,CHIP 1 (1608)
R700	1-218-831-11	s	RESISTOR, CHIP 220 1/10W(1608)
R701	1-218-823-11	s	RESISTOR,CHIP 100 1/10W (1608)
R703	1-218-871-11	s	RESISTOR,CHIP 10K 1/10W (1608)
R706	1-218-895-11	s	RESISTOR,CHIP 100K 1/10W(1608)
R708	1-218-823-11	s	RESISTOR,CHIP 100 1/10W (1608)
R711	1-218-895-11	s	RESISTOR,CHIP 100K 1/10W(1608)
R712	1-218-895-11	s	RESISTOR,CHIP 100K 1/10W(1608)
R713	1-218-895-11	s	RESISTOR,CHIP 100K 1/10W(1608)
R727	1-218-871-11	s	RESISTOR,CHIP 10K 1/10W (1608)
R729	1-216-864-11	s	CONDUCTOR, CHIP (1608)
R733	1-218-863-11	s	RESISTOR,CHIP 4.7K 1/10W(1608)
R734	1-218-835-11	s	RESISTOR,CHIP 330 1/10W (1608)

(VPR-64A BOARD [SUFFIX 17-] for HDW and MSW PLAYER)

Ref. No. or Q'ty	Part No.	SP	Description
R735	1-218-863-11	s	RESISTOR,CHIP 4.7K 1/10W(1608)
R736	1-218-863-11	s	RESISTOR,CHIP 4.7K 1/10W(1608)
R741	1-218-823-11	s	RESISTOR,CHIP 100 1/10W (1608)
R742	1-218-823-11	s	RESISTOR,CHIP 100 1/10W (1608)
R743	1-216-864-11	s	CONDUCTOR, CHIP (1608)
R752	1-216-864-11	s	CONDUCTOR, CHIP (1608)
R753	1-211-985-11	s	RESISTOR,CHIP 47 1/10W (1608)
R754	1-211-985-11	s	RESISTOR,CHIP 47 1/10W (1608)
R755	1-211-985-11	s	RESISTOR,CHIP 47 1/10W (1608)
R800	1-218-871-11	s	RESISTOR,CHIP 10K 1/10W (1608)
R801	1-218-871-11	s	RESISTOR,CHIP 10K 1/10W (1608)
R802	1-218-834-11	s	RESISTOR,CHIP 300 1/10W (1608)
R803	1-218-871-11	s	RESISTOR,CHIP 10K 1/10W (1608)
R804	1-218-871-11	s	RESISTOR,CHIP 10K 1/10W (1608)
R805	1-218-871-11	s	RESISTOR,CHIP 10K 1/10W (1608)
R806	1-211-985-11	s	RESISTOR,CHIP 47 1/10W (1608)
R807	1-218-831-11	s	RESISTOR, CHIP 220 1/10W(1608)
R908	1-218-878-11	s	RESISTOR,CHIP 20K 1/10W (1608)
R909	1-218-876-11	s	RESISTOR,CHIP 16K 1/10W (1608)
R910	1-218-878-11	s	RESISTOR,CHIP 20K 1/10W (1608)
R911	1-218-876-11	s	RESISTOR,CHIP 16K 1/10W (1608)
R912	1-218-887-11	s	RESISTOR,CHIP 47K 1/10W (1608)
R913	1-218-878-11	s	RESISTOR,CHIP 20K 1/10W (1608)
R914	1-218-876-11	s	RESISTOR,CHIP 16K 1/10W (1608)
R915	1-218-895-11	s	RESISTOR,CHIP 100K 1/10W(1608)
R916	1-216-864-11	s	CONDUCTOR, CHIP (1608)
R921	1-216-864-11	s	CONDUCTOR, CHIP (1608)
R924	1-218-823-11	s	RESISTOR,CHIP 100 1/10W (1608)
R925	1-218-823-11	s	RESISTOR,CHIP 100 1/10W (1608)
R926	1-218-823-11	s	RESISTOR,CHIP 100 1/10W (1608)
R927	1-218-823-11	s	RESISTOR,CHIP 100 1/10W (1608)
R932	1-218-857-11	s	RESISTOR,CHIP 2.7K 1/10W(1608)
R933	1-218-857-11	s	RESISTOR,CHIP 2.7K 1/10W(1608)
R934	1-218-857-11	s	RESISTOR,CHIP 2.7K 1/10W(1608)
R935	1-218-823-11	s	RESISTOR,CHIP 100 1/10W (1608)
R938	1-216-864-11	s	CONDUCTOR, CHIP (1608)
R939	1-216-864-11	s	CONDUCTOR, CHIP (1608)
R953	1-218-871-11	s	RESISTOR,CHIP 10K 1/10W (1608)
R954	1-218-871-11	s	RESISTOR,CHIP 10K 1/10W (1608)
R955	1-218-911-11	s	RESISTOR,CHIP 470K 1/10W(1608)
R956	1-218-863-11	s	RESISTOR,CHIP 4.7K 1/10W(1608)
R957	1-211-977-11	s	RESISTOR,CHIP 22 1/10W (1608)
R960	1-218-871-11	s	RESISTOR,CHIP 10K 1/10W (1608)
R961	1-218-849-11	s	RESISTOR,CHIP 1.2K 1/10W(1608)
R962	1-218-883-11	s	RESISTOR,CHIP 33K 1/10W (1608)
R963	1-218-875-11	s	RESISTOR,CHIP 15K 1/10W (1608)
R964	1-218-876-11	s	RESISTOR,CHIP 16K 1/10W (1608)
R965	1-216-857-11	s	RESISTOR,CHIP 1M 1/10W(1608)
R966	1-218-883-11	s	RESISTOR,CHIP 33K 1/10W (1608)
R967	1-218-875-11	s	RESISTOR,CHIP 15K 1/10W (1608)
R968	1-218-876-11	s	RESISTOR,CHIP 16K 1/10W (1608)
R969	1-218-892-11	s	RESISTOR,CHIP 75K 1/10W (1608)
R970	1-218-875-11	s	RESISTOR,CHIP 15K 1/10W (1608)
R971	1-218-874-11	s	RESISTOR,CHIP 13K 1/10W (1608)
R972	1-218-823-11	s	RESISTOR,CHIP 100 1/10W (1608)
R973	1-218-823-11	s	RESISTOR,CHIP 100 1/10W (1608)
R974	1-218-823-11	s	RESISTOR,CHIP 100 1/10W (1608)
R975	1-218-853-11	s	RESISTOR,CHIP 1.8K 1/10W(1608)
R976	1-218-853-11	s	RESISTOR,CHIP 1.8K 1/10W(1608)

(VPR-64A BOARD [SUFFIX 17-] for HDW and MSW PLAYER)

Ref. No. or Q'ty	Part No.	SP	Description
R977	1-218-849-11	s	RESISTOR,CHIP 1.2K 1/10W(1608)
R979	1-218-835-11	s	RESISTOR,CHIP 330 1/10W (1608)
R980	1-218-863-11	s	RESISTOR,CHIP 4.7K 1/10W(1608)
R981	1-218-823-11	s	RESISTOR,CHIP 100 1/10W (1608)
R982	1-218-827-11	s	RESISTOR,CHIP 150 1/10W (1608)
R983	1-218-827-11	s	RESISTOR,CHIP 150 1/10W (1608)
R984	1-218-827-11	s	RESISTOR,CHIP 150 1/10W (1608)
R985	1-218-827-11	s	RESISTOR,CHIP 150 1/10W (1608)
R986	1-218-827-11	s	RESISTOR,CHIP 150 1/10W (1608)
R987	1-218-827-11	s	RESISTOR,CHIP 150 1/10W (1608)
R988	1-218-827-11	s	RESISTOR,CHIP 150 1/10W (1608)
R989	1-218-827-11	s	RESISTOR,CHIP 150 1/10W (1608)
R990	1-211-975-11	s	RESISTOR,CHIP 18 1/10W (1608)
R991	1-211-991-11	s	RESISTOR,CHIP 82 1/10W (1608)
R992	1-211-973-11	s	RESISTOR,CHIP 15 1/10W (1608)
R993	1-211-973-11	s	RESISTOR,CHIP 15 1/10W (1608)
R994	1-211-975-11	s	RESISTOR,CHIP 18 1/10W (1608)
R995	1-211-991-11	s	RESISTOR,CHIP 82 1/10W (1608)
R996	1-218-853-11	s	RESISTOR,CHIP 1.8K 1/10W(1608)
R997	1-218-850-11	s	RESISTOR,CHIP 1.3K 1/10W(1608)
R998	1-218-850-11	s	RESISTOR,CHIP 1.3K 1/10W(1608)
R999	1-218-853-11	s	RESISTOR,CHIP 1.8K 1/10W(1608)
R1000	1-218-827-11	s	RESISTOR,CHIP 150 1/10W (1608)
R1001	1-218-827-11	s	RESISTOR,CHIP 150 1/10W (1608)
R1002	1-218-827-11	s	RESISTOR,CHIP 150 1/10W (1608)
R1003	1-218-827-11	s	RESISTOR,CHIP 150 1/10W (1608)
R1004	1-218-827-11	s	RESISTOR,CHIP 150 1/10W (1608)
R1005	1-218-827-11	s	RESISTOR,CHIP 150 1/10W (1608)
R1006	1-218-827-11	s	RESISTOR,CHIP 150 1/10W (1608)
R1007	1-218-827-11	s	RESISTOR,CHIP 150 1/10W (1608)
R1008	1-218-863-11	s	RESISTOR,CHIP 4.7K 1/10W(1608)
R1009	1-218-871-11	s	RESISTOR,CHIP 10K 1/10W (1608)
R1010	1-218-863-11	s	RESISTOR,CHIP 4.7K 1/10W(1608)
R1011	1-218-885-11	s	RESISTOR,CHIP 39K 1/10W (1608)
R1012	1-218-863-11	s	RESISTOR,CHIP 4.7K 1/10W(1608)
R1013	1-218-885-11	s	RESISTOR,CHIP 39K 1/10W (1608)
R1014	1-218-863-11	s	RESISTOR,CHIP 4.7K 1/10W(1608)
R1015	1-218-871-11	s	RESISTOR,CHIP 10K 1/10W (1608)
R1016	1-218-858-11	s	RESISTOR, CHIP 3K 1/10W (1608)
R1017	1-218-858-11	s	RESISTOR, CHIP 3K 1/10W (1608)
R1018	1-218-858-11	s	RESISTOR, CHIP 3K 1/10W (1608)
R1019	1-218-849-11	s	RESISTOR,CHIP 1.2K 1/10W(1608)
R1020	1-218-849-11	s	RESISTOR,CHIP 1.2K 1/10W(1608)
R1021	1-218-849-11	s	RESISTOR,CHIP 1.2K 1/10W(1608)
R1022	1-218-849-11	s	RESISTOR,CHIP 1.2K 1/10W(1608)
R1023	1-218-855-11	s	RESISTOR,CHIP 2.2K 1/10W(1608)
R1024	1-216-863-11	s	RESISTOR,CHIP 3.3M 1/16W 1608
R1025	1-216-863-11	s	RESISTOR,CHIP 3.3M 1/16W 1608
R1026	1-216-863-11	s	RESISTOR,CHIP 3.3M 1/16W 1608
R1027	1-216-863-11	s	RESISTOR,CHIP 3.3M 1/16W 1608
R1028	1-218-881-11	s	RESISTOR, CHIP 27K 1/10W(1608)
R1029	1-218-847-11	s	RESISTOR, CHIP 1K 1/10W (1608)
R1030	1-218-867-11	s	RESISTOR,CHIP 6.8K 1/10W(1608)
R1031	1-218-847-11	s	RESISTOR, CHIP 1K 1/10W (1608)
R1032	1-218-867-11	s	RESISTOR,CHIP 6.8K 1/10W(1608)
R1033	1-218-847-11	s	RESISTOR, CHIP 1K 1/10W (1608)
R1034	1-218-867-11	s	RESISTOR,CHIP 6.8K 1/10W(1608)
R1035	1-218-847-11	s	RESISTOR, CHIP 1K 1/10W (1608)
R1036	1-218-867-11	s	RESISTOR,CHIP 6.8K 1/10W(1608)

(VPR-64A BOARD [SUFFIX 17-] for HDW and MSW PLAYER)

Ref. No. or Q'ty	Part No.	SP	Description
R1037	1-218-875-11	s	RESISTOR,CHIP 15K 1/10W (1608)
R1039	1-218-849-11	s	RESISTOR,CHIP 1.2K 1/10W(1608)
R1040	1-218-863-11	s	RESISTOR,CHIP 4.7K 1/10W(1608)
R1041	1-218-847-11	s	RESISTOR, CHIP 1K 1/10W (1608)
R1042	1-218-847-11	s	RESISTOR, CHIP 1K 1/10W (1608)
R1043	1-218-847-11	s	RESISTOR, CHIP 1K 1/10W (1608)
R1044	1-218-847-11	s	RESISTOR, CHIP 1K 1/10W (1608)
R1045	1-218-847-11	s	RESISTOR, CHIP 1K 1/10W (1608)
R1046	1-218-854-11	s	RESISTOR,CHIP 2K 1/10W (1608)
R1047	1-218-854-11	s	RESISTOR,CHIP 2K 1/10W (1608)
R1048	1-218-859-11	s	RESISTOR,CHIP 3.3K 1/10W(1608)
R1049	1-218-857-11	s	RESISTOR,CHIP 2.7K 1/10W(1608)
R1050	1-218-857-11	s	RESISTOR,CHIP 2.7K 1/10W(1608)
R1051	1-218-857-11	s	RESISTOR,CHIP 2.7K 1/10W(1608)
R1052	1-218-847-11	s	RESISTOR, CHIP 1K 1/10W (1608)
R1053	1-218-847-11	s	RESISTOR, CHIP 1K 1/10W (1608)
R1054	1-218-847-11	s	RESISTOR, CHIP 1K 1/10W (1608)
R1055	1-218-854-11	s	RESISTOR,CHIP 2K 1/10W (1608)
R1056	1-218-854-11	s	RESISTOR,CHIP 2K 1/10W (1608)
R1057	1-218-854-11	s	RESISTOR,CHIP 2K 1/10W (1608)
R1058	1-218-854-11	s	RESISTOR,CHIP 2K 1/10W (1608)
R1061	1-211-990-11	s	RESISTOR,CHIP 75 1/10W (1608)
R1062	1-211-990-11	s	RESISTOR,CHIP 75 1/10W (1608)
R1063	1-211-990-11	s	RESISTOR,CHIP 75 1/10W (1608)
R1064	1-211-990-11	s	RESISTOR,CHIP 75 1/10W (1608)
R1065	1-211-990-11	s	RESISTOR,CHIP 75 1/10W (1608)
R1066	1-211-990-11	s	RESISTOR,CHIP 75 1/10W (1608)
R1069	1-218-823-11	s	RESISTOR,CHIP 100 1/10W (1608)
R1070	1-218-823-11	s	RESISTOR,CHIP 100 1/10W (1608)
R1072	1-211-985-11	s	RESISTOR,CHIP 47 1/10W (1608)
R1073	1-211-985-11	s	RESISTOR,CHIP 47 1/10W (1608)
R1074	1-218-823-11	s	RESISTOR,CHIP 100 1/10W (1608)
R1075	1-218-823-11	s	RESISTOR,CHIP 100 1/10W (1608)
R1076	1-218-823-11	s	RESISTOR,CHIP 100 1/10W (1608)
R1077	1-218-863-11	s	RESISTOR,CHIP 4.7K 1/10W(1608)
R1079	1-216-864-11	s	CONDUCTOR, CHIP (1608)
R1080	1-218-871-11	s	RESISTOR,CHIP 10K 1/10W (1608)
R1081	1-218-871-11	s	RESISTOR,CHIP 10K 1/10W (1608)
R1082	1-218-895-11	s	RESISTOR,CHIP 100K 1/10W(1608)
R1083	1-218-871-11	s	RESISTOR,CHIP 10K 1/10W (1608)
R1084	1-218-871-11	s	RESISTOR,CHIP 10K 1/10W (1608)
R1085	1-218-871-11	s	RESISTOR,CHIP 10K 1/10W (1608)
R1086	1-218-871-11	s	RESISTOR,CHIP 10K 1/10W (1608)
R1087	1-218-871-11	s	RESISTOR,CHIP 10K 1/10W (1608)
R1088	1-218-871-11	s	RESISTOR,CHIP 10K 1/10W (1608)
R1089	1-218-871-11	s	RESISTOR,CHIP 10K 1/10W (1608)
R1090	1-218-871-11	s	RESISTOR,CHIP 10K 1/10W (1608)
R1091	1-218-847-11	s	RESISTOR, CHIP 1K 1/10W (1608)
R1102	1-218-847-11	s	RESISTOR, CHIP 1K 1/10W (1608)
R1103	1-211-985-11	s	RESISTOR,CHIP 47 1/10W (1608)
R1104	1-218-845-11	s	RESISTOR,CHIP 820 1/10W (1608)
R1105	1-218-847-11	s	RESISTOR, CHIP 1K 1/10W (1608)
R1106	1-218-847-11	s	RESISTOR, CHIP 1K 1/10W (1608)
R1107	1-218-857-11	s	RESISTOR,CHIP 2.7K 1/10W(1608)
R1108	1-218-831-11	s	RESISTOR, CHIP 220 1/10W(1608)
R1109	1-218-871-11	s	RESISTOR,CHIP 10K 1/10W (1608)
R1110	1-218-855-11	s	RESISTOR,CHIP 2.2K 1/10W(1608)
R1111	1-218-871-11	s	RESISTOR,CHIP 10K 1/10W (1608)
R1112	1-216-863-11	s	RESISTOR,CHIP 3.3M 1/16W 1608

(VPR-64A BOARD [SUFFIX 17-] for HDW and MSW PLAYER)

Ref. No. or Q'ty	Part No.	SP	Description
R1113	1-216-863-11	s	RESISTOR,CHIP 3.3M 1/16W 1608
R1114	1-218-855-11	s	RESISTOR,CHIP 2.2K 1/10W(1608)
R1115	1-218-871-11	s	RESISTOR,CHIP 10K 1/10W (1608)
R1116	1-216-857-11	s	RESISTOR,CHIP 1M 1/10W(1608)
R1117	1-218-857-11	s	RESISTOR,CHIP 2.7K 1/10W(1608)
R1118	1-218-854-11	s	RESISTOR,CHIP 2K 1/10W (1608)
R1119	1-218-859-11	s	RESISTOR,CHIP 3.3K 1/10W(1608)
R1120	1-218-847-11	s	RESISTOR, CHIP 1K 1/10W (1608)
R1121	1-218-855-11	s	RESISTOR,CHIP 2.2K 1/10W(1608)
R1122	1-218-863-11	s	RESISTOR,CHIP 4.7K 1/10W(1608)
R1124	1-218-847-11	s	RESISTOR, CHIP 1K 1/10W (1608)
R1126	1-218-847-11	s	RESISTOR, CHIP 1K 1/10W (1608)
R1127	1-218-849-11	s	RESISTOR,CHIP 1.2K 1/10W(1608)
R1129	1-218-879-11	s	RESISTOR,CHIP 22K 1/10W (1608)
R1130	1-218-863-11	s	RESISTOR,CHIP 4.7K 1/10W(1608)
R1132	1-218-863-11	s	RESISTOR,CHIP 4.7K 1/10W(1608)
R1135	1-218-823-11	s	RESISTOR,CHIP 100 1/10W (1608)
R1136	1-218-823-11	s	RESISTOR,CHIP 100 1/10W (1608)
R1138	1-218-823-11	s	RESISTOR,CHIP 100 1/10W (1608)
R1139	1-218-847-11	s	RESISTOR, CHIP 1K 1/10W (1608)
R1140	1-218-847-11	s	RESISTOR, CHIP 1K 1/10W (1608)
R1141	1-218-847-11	s	RESISTOR, CHIP 1K 1/10W (1608)
R1142	1-218-847-11	s	RESISTOR, CHIP 1K 1/10W (1608)
R1148	1-218-823-11	s	RESISTOR,CHIP 100 1/10W (1608)
R1149	1-218-871-11	s	RESISTOR,CHIP 10K 1/10W (1608)
R1150	1-218-871-11	s	RESISTOR,CHIP 10K 1/10W (1608)
R1152	1-218-895-11	s	RESISTOR,CHIP 100K 1/10W(1608)
R1153	1-218-871-11	s	RESISTOR,CHIP 10K 1/10W (1608)
R1154	1-218-847-11	s	RESISTOR, CHIP 1K 1/10W (1608)
R1155	1-218-847-11	s	RESISTOR, CHIP 1K 1/10W (1608)
R1156	1-218-847-11	s	RESISTOR, CHIP 1K 1/10W (1608)
R1157	1-216-864-11	s	CONDUCTOR, CHIP (1608)
R1161	1-218-871-11	s	RESISTOR,CHIP 10K 1/10W (1608)
R1200	1-218-833-11	s	RESISTOR,CHIP 270 1/10W (1608)
R1201	1-218-865-11	s	RESISTOR,CHIP 5.6K 1/10W(1608)
R1202	1-218-865-11	s	RESISTOR,CHIP 5.6K 1/10W(1608)
R1203	1-218-855-11	s	RESISTOR,CHIP 2.2K 1/10W(1608)
R1204	1-218-864-11	s	RESISTOR,CHIP 5.1K 1/10W(1608)
R1209	1-218-857-11	s	RESISTOR,CHIP 2.7K 1/10W(1608)
R1210	1-216-864-11	s	CONDUCTOR, CHIP (1608)
R1211	1-216-864-11	s	CONDUCTOR, CHIP (1608)
R1212	1-216-864-11	s	CONDUCTOR, CHIP (1608)
R1213	1-218-863-11	s	RESISTOR,CHIP 4.7K 1/10W(1608)
R1214	1-216-864-11	s	CONDUCTOR, CHIP (1608)
R1215	1-216-864-11	s	CONDUCTOR, CHIP (1608)
R1216	1-216-864-11	s	CONDUCTOR, CHIP (1608)
R1217	1-216-864-11	s	CONDUCTOR, CHIP (1608)
R1218	1-216-864-11	s	CONDUCTOR, CHIP (1608)
R1219	1-216-864-11	s	CONDUCTOR, CHIP (1608)
R1220	1-216-864-11	s	CONDUCTOR, CHIP (1608)
R1221	1-216-864-11	s	CONDUCTOR, CHIP (1608)
R1222	1-216-864-11	s	CONDUCTOR, CHIP (1608)
R1226	1-211-985-11	s	RESISTOR,CHIP 47 1/10W (1608)
R1227	1-218-839-11	s	RESISTOR,CHIP 470 1/10W (1608)
R1231	1-218-871-11	s	RESISTOR,CHIP 10K 1/10W (1608)
R1232	1-218-871-11	s	RESISTOR,CHIP 10K 1/10W (1608)
R1236	1-218-889-11	s	RESISTOR,CHIP 56K 1/10W(1608)
R1237	1-216-864-11	s	CONDUCTOR, CHIP (1608)
R1238	1-218-839-11	s	RESISTOR,CHIP 470 1/10W (1608)

(VPR-64A BOARD [SUFFIX 17-] for HDW and MSW PLAYER)

Ref. No. or Q'ty	Part No.	SP	Description
R1239	1-216-857-11	s	RESISTOR,CHIP 1M 1/10W(1608)
R1240	1-216-857-11	s	RESISTOR,CHIP 1M 1/10W(1608)
R1242	1-218-871-11	s	RESISTOR,CHIP 10K 1/10W (1608)
R1243	1-218-895-11	s	RESISTOR,CHIP 100K 1/10W(1608)
R1245	1-218-893-11	s	RESISTOR, CHIP 82K 1/10W(1608)
R1246	1-218-879-11	s	RESISTOR,CHIP 22K 1/10W (1608)
R1247	1-218-879-11	s	RESISTOR,CHIP 22K 1/10W (1608)
R1248	1-218-823-11	s	RESISTOR,CHIP 100 1/10W (1608)
R1249	1-220-800-91	s	RESISTOR, CHIP 1.5M (1608)
R1250	1-218-823-11	s	RESISTOR,CHIP 100 1/10W (1608)
R1252	1-218-887-11	s	RESISTOR,CHIP 47K 1/10W (1608)
R1253	1-218-847-11	s	RESISTOR, CHIP 1K 1/10W (1608)
R1254	1-218-861-11	s	RESISTOR,CHIP 3.9K 1/10W(1608)
R1255	1-216-864-11	s	CONDUCTOR, CHIP (1608)
R1256	1-218-911-11	s	RESISTOR,CHIP 470K 1/10W(1608)
R1257	1-218-878-11	s	RESISTOR,CHIP 20K 1/10W (1608)
R1258	1-218-855-11	s	RESISTOR,CHIP 2.2K 1/10W(1608)
R1259	1-218-847-11	s	RESISTOR, CHIP 1K 1/10W (1608)
R1260	1-218-882-11	s	RESISTOR, CHIP 30K 1/10W(1608)
R1261	1-218-839-11	s	RESISTOR,CHIP 470 1/10W (1608)
R1262	1-218-845-11	s	RESISTOR,CHIP 820 1/10W (1608)
R1263	1-216-857-11	s	RESISTOR,CHIP 1M 1/10W(1608)
R1264	1-211-985-11	s	RESISTOR,CHIP 47 1/10W (1608)
R1266	1-218-847-11	s	RESISTOR, CHIP 1K 1/10W (1608)
R1267	1-218-839-11	s	RESISTOR,CHIP 470 1/10W (1608)
R1269	1-218-871-11	s	RESISTOR,CHIP 10K 1/10W (1608)
R1270	1-218-871-11	s	RESISTOR,CHIP 10K 1/10W (1608)
R1271	1-218-871-11	s	RESISTOR,CHIP 10K 1/10W (1608)
R1272	1-218-883-11	s	RESISTOR,CHIP 33K 1/10W (1608)
R1274	1-218-891-11	s	RESISTOR,CHIP 68K 1/10W (1608)
R1275	1-218-839-11	s	RESISTOR,CHIP 470 1/10W (1608)
R1276	1-218-847-11	s	RESISTOR, CHIP 1K 1/10W (1608)
R1277	1-218-847-11	s	RESISTOR, CHIP 1K 1/10W (1608)
R1278	1-218-871-11	s	RESISTOR,CHIP 10K 1/10W (1608)
R1279	1-218-871-11	s	RESISTOR,CHIP 10K 1/10W (1608)
R1280	1-218-863-11	s	RESISTOR,CHIP 4.7K 1/10W(1608)
R1281	1-218-881-11	s	RESISTOR, CHIP 27K 1/10W(1608)
R1282	1-211-985-11	s	RESISTOR,CHIP 47 1/10W (1608)
R1283	1-211-985-11	s	RESISTOR,CHIP 47 1/10W (1608)
R1284	1-218-855-11	s	RESISTOR,CHIP 2.2K 1/10W(1608)
R1285	1-218-868-11	s	RESISTOR,CHIP 7.5K 1/10W(1608)
R1286	1-218-867-11	s	RESISTOR,CHIP 6.8K 1/10W(1608)
R1287	1-218-874-11	s	RESISTOR,CHIP 13K 1/10W (1608)
R1288	1-218-823-11	s	RESISTOR,CHIP 100 1/10W (1608)
R1289	1-218-885-11	s	RESISTOR,CHIP 39K 1/10W (1608)
R1290	1-218-839-11	s	RESISTOR,CHIP 470 1/10W (1608)
R1291	1-218-855-11	s	RESISTOR,CHIP 2.2K 1/10W(1608)
R1292	1-211-985-11	s	RESISTOR,CHIP 47 1/10W (1608)
R1293	1-218-895-11	s	RESISTOR,CHIP 100K 1/10W(1608)
R1294	1-218-871-11	s	RESISTOR,CHIP 10K 1/10W (1608)
R1295	1-218-895-11	s	RESISTOR,CHIP 100K 1/10W(1608)
R1296	1-218-879-11	s	RESISTOR,CHIP 22K 1/10W (1608)
R1297	1-218-877-11	s	RESISTOR,CHIP 18K 1/10W (1608)
R1298	1-218-847-11	s	RESISTOR, CHIP 1K 1/10W (1608)
R1299	1-218-871-11	s	RESISTOR,CHIP 10K 1/10W (1608)
R1300	1-218-874-11	s	RESISTOR,CHIP 13K 1/10W (1608)
R1301	1-218-871-11	s	RESISTOR,CHIP 10K 1/10W (1608)
R1302	1-218-895-11	s	RESISTOR,CHIP 100K 1/10W(1608)
R1305	1-218-823-11	s	RESISTOR,CHIP 100 1/10W (1608)

(VPR-64A BOARD [SUFFIX 17-] for HDW and MSW PLAYER)

Ref. No. or Q'ty	Part No.	SP	Description
R1310	1-218-878-11	s	RESISTOR,CHIP 20K 1/10W (1608)
R1311	1-218-878-11	s	RESISTOR,CHIP 20K 1/10W (1608)
R1312	1-218-844-11	s	RESISTOR,CHIP 750 1/10W (1608)
R1313	1-218-844-11	s	RESISTOR,CHIP 750 1/10W (1608)
R1314	1-216-857-11	s	RESISTOR,CHIP 1M 1/10W(1608)
R1315	1-218-823-11	s	RESISTOR,CHIP 100 1/10W (1608)
R1316	1-218-823-11	s	RESISTOR,CHIP 100 1/10W (1608)
R1317	1-218-823-11	s	RESISTOR,CHIP 100 1/10W (1608)
R1318	1-218-823-11	s	RESISTOR,CHIP 100 1/10W (1608)
R1319	1-218-823-11	s	RESISTOR,CHIP 100 1/10W (1608)
R1320	1-218-823-11	s	RESISTOR,CHIP 100 1/10W (1608)
R1321	1-218-823-11	s	RESISTOR,CHIP 100 1/10W (1608)
R1322	1-218-823-11	s	RESISTOR,CHIP 100 1/10W (1608)
R1323	1-218-823-11	s	RESISTOR,CHIP 100 1/10W (1608)
R1324	1-218-823-11	s	RESISTOR,CHIP 100 1/10W (1608)
R1325	1-218-894-11	s	RESISTOR,CHIP 91K 1/10W (1608)
R1326	1-218-894-11	s	RESISTOR,CHIP 91K 1/10W (1608)
R1327	1-218-871-11	s	RESISTOR,CHIP 10K 1/10W (1608)
R1328	1-218-871-11	s	RESISTOR,CHIP 10K 1/10W (1608)
R1329	1-218-823-11	s	RESISTOR,CHIP 100 1/10W (1608)
R1330	1-218-871-11	s	RESISTOR,CHIP 10K 1/10W (1608)
R1331	1-218-879-11	s	RESISTOR,CHIP 22K 1/10W (1608)
R1332	1-218-823-11	s	RESISTOR,CHIP 100 1/10W (1608)
R1333	1-218-823-11	s	RESISTOR,CHIP 100 1/10W (1608)
R1334	1-218-823-11	s	RESISTOR,CHIP 100 1/10W (1608)
R1336	1-216-864-11	s	CONDUCTOR, CHIP (1608)
R1337	1-211-977-11	s	RESISTOR,CHIP 22 1/10W (1608)
R1338	1-218-871-11	s	RESISTOR,CHIP 10K 1/10W (1608)
R1339	1-218-871-11	s	RESISTOR,CHIP 10K 1/10W (1608)
R1340	1-218-848-11	s	RESISTOR,CHIP 1.1K 1/10W(1608)
R1343	1-216-864-11	s	CONDUCTOR, CHIP (1608)
R1344	1-216-864-11	s	CONDUCTOR, CHIP (1608)
R1345	1-218-839-11	s	RESISTOR,CHIP 470 1/10W (1608)
R1346	1-218-890-11	s	RESISTOR, CHIP 62K 1/10W(1608)
R1347	1-218-823-11	s	RESISTOR,CHIP 100 1/10W (1608)
R1348	1-218-823-11	s	RESISTOR,CHIP 100 1/10W (1608)
R1349	1-218-823-11	s	RESISTOR,CHIP 100 1/10W (1608)
R1350	1-218-823-11	s	RESISTOR,CHIP 100 1/10W (1608)
R1382	1-216-864-11	s	CONDUCTOR, CHIP (1608)
R1383	1-216-864-11	s	CONDUCTOR, CHIP (1608)
R1385	1-218-835-11	s	RESISTOR,CHIP 330 1/10W (1608)
R1386	1-218-847-11	s	RESISTOR, CHIP 1K 1/10W (1608)
R1387	1-218-847-11	s	RESISTOR, CHIP 1K 1/10W (1608)
R1388	1-218-859-11	s	RESISTOR,CHIP 3.3K 1/10W(1608)
R1389	1-218-855-11	s	RESISTOR,CHIP 2.2K 1/10W(1608)
R1390	1-218-860-11	s	RESISTOR,CHIP 3.6K 1/10W(1608)
R1392	1-216-864-11	s	CONDUCTOR, CHIP (1608)
R1393	1-211-985-11	s	RESISTOR,CHIP 47 1/10W (1608)
R1394	1-216-864-11	s	CONDUCTOR, CHIP (1608)
R1401	1-211-985-11	s	RESISTOR,CHIP 47 1/10W (1608)
R1402	1-216-864-11	s	CONDUCTOR, CHIP (1608)
R1403	1-211-985-11	s	RESISTOR,CHIP 47 1/10W (1608)
R1404	1-218-895-11	s	RESISTOR,CHIP 100K 1/10W(1608)
R1405	1-216-864-11	s	CONDUCTOR, CHIP (1608)
R1406	1-211-985-11	s	RESISTOR,CHIP 47 1/10W (1608)
R1407	1-218-839-11	s	RESISTOR,CHIP 470 1/10W (1608)
R1409	1-216-864-11	s	CONDUCTOR, CHIP (1608)
R1410	1-218-839-11	s	RESISTOR,CHIP 470 1/10W (1608)
R1411	1-218-839-11	s	RESISTOR,CHIP 470 1/10W (1608)

(VPR-64A BOARD [SUFFIX 17-] for HDW and MSW PLAYER)

Ref. No. or Q'ty	Part No.	SP	Description
R1412	1-218-895-11	s	RESISTOR,CHIP 100K 1/10W(1608)
R1413	1-216-864-11	s	CONDUCTOR, CHIP (1608)
R1414	1-216-864-11	s	CONDUCTOR, CHIP (1608)
R1415	1-218-895-11	s	RESISTOR,CHIP 100K 1/10W(1608)
R1416	1-218-857-11	s	RESISTOR,CHIP 2.7K 1/10W(1608)
R1419	1-218-857-11	s	RESISTOR,CHIP 2.7K 1/10W(1608)
R1420	1-218-857-11	s	RESISTOR,CHIP 2.7K 1/10W(1608)
R1421	1-218-895-11	s	RESISTOR,CHIP 100K 1/10W(1608)
R1422	1-216-864-11	s	CONDUCTOR, CHIP (1608)
R1423	1-218-871-11	s	RESISTOR,CHIP 10K 1/10W (1608)
R1424	1-218-839-11	s	RESISTOR,CHIP 470 1/10W (1608)
R1427	1-218-871-11	s	RESISTOR,CHIP 10K 1/10W (1608)
R1428	1-218-839-11	s	RESISTOR,CHIP 470 1/10W (1608)
R1429	1-218-871-11	s	RESISTOR,CHIP 10K 1/10W (1608)
R1430	1-218-839-11	s	RESISTOR,CHIP 470 1/10W (1608)
R1431	1-218-871-11	s	RESISTOR,CHIP 10K 1/10W (1608)
R1432	1-218-839-11	s	RESISTOR,CHIP 470 1/10W (1608)
R1433	1-218-823-11	s	RESISTOR,CHIP 100 1/10W (1608)
R1435	1-218-823-11	s	RESISTOR,CHIP 100 1/10W (1608)
R1436	1-218-823-11	s	RESISTOR,CHIP 100 1/10W (1608)
R1437	1-218-823-11	s	RESISTOR,CHIP 100 1/10W (1608)
R1438	1-218-839-11	s	RESISTOR,CHIP 470 1/10W (1608)
R1439	1-218-839-11	s	RESISTOR,CHIP 470 1/10W (1608)
R1440	1-211-985-11	s	RESISTOR,CHIP 47 1/10W (1608)
R1441	1-218-857-11	s	RESISTOR,CHIP 2.7K 1/10W(1608)
R1442	1-218-871-11	s	RESISTOR,CHIP 10K 1/10W (1608)
R1444	1-211-985-11	s	RESISTOR,CHIP 47 1/10W (1608)
R1445	1-211-985-11	s	RESISTOR,CHIP 47 1/10W (1608)
R1446	1-211-985-11	s	RESISTOR,CHIP 47 1/10W (1608)
R1447	1-211-985-11	s	RESISTOR,CHIP 47 1/10W (1608)
R1448	1-211-985-11	s	RESISTOR,CHIP 47 1/10W (1608)
R1449	1-211-985-11	s	RESISTOR,CHIP 47 1/10W (1608)
R1450	1-211-977-11	s	RESISTOR,CHIP 22 1/10W (1608)
R1451	1-218-895-11	s	RESISTOR,CHIP 100K 1/10W(1608)
R1452	1-216-864-11	s	CONDUCTOR, CHIP (1608)
R1453	1-216-864-11	s	CONDUCTOR, CHIP (1608)
R1454	1-216-864-11	s	CONDUCTOR, CHIP (1608)
R1455	1-216-864-11	s	CONDUCTOR, CHIP (1608)
R1456	1-216-864-11	s	CONDUCTOR, CHIP (1608)
R1457	1-211-985-11	s	RESISTOR,CHIP 47 1/10W (1608)
R1458	1-218-823-11	s	RESISTOR,CHIP 100 1/10W (1608)
R1460	1-216-864-11	s	CONDUCTOR, CHIP (1608)
R1462	1-211-985-11	s	RESISTOR,CHIP 47 1/10W (1608)
R1463	1-211-985-11	s	RESISTOR,CHIP 47 1/10W (1608)
R1500	1-211-985-11	s	RESISTOR,CHIP 47 1/10W (1608)
R1502	1-218-823-11	s	RESISTOR,CHIP 100 1/10W (1608)
R1503	1-218-831-11	s	RESISTOR, CHIP 220 1/10W(1608)
R1504	1-218-831-11	s	RESISTOR, CHIP 220 1/10W(1608)
R1505	1-218-831-11	s	RESISTOR, CHIP 220 1/10W(1608)
R1506	1-218-831-11	s	RESISTOR, CHIP 220 1/10W(1608)
R1507	1-218-831-11	s	RESISTOR, CHIP 220 1/10W(1608)
R1508	1-218-831-11	s	RESISTOR, CHIP 220 1/10W(1608)
R1509	1-218-831-11	s	RESISTOR, CHIP 220 1/10W(1608)
R1510	1-218-831-11	s	RESISTOR, CHIP 220 1/10W(1608)
R1511	1-218-831-11	s	RESISTOR, CHIP 220 1/10W(1608)
R1512	1-218-831-11	s	RESISTOR, CHIP 220 1/10W(1608)
R1513	1-218-831-11	s	RESISTOR, CHIP 220 1/10W(1608)
R1514	1-218-831-11	s	RESISTOR, CHIP 220 1/10W(1608)
R1515	1-218-831-11	s	RESISTOR, CHIP 220 1/10W(1608)

(VPR-64A BOARD [SUFFIX 17-] for HDW and MSW PLAYER)

Ref. No. or Q'ty	Part No.	SP	Description
R1516	1-218-831-11	s	RESISTOR, CHIP 220 1/10W(1608)
R1517	1-218-831-11	s	RESISTOR, CHIP 220 1/10W(1608)
R1518	1-218-831-11	s	RESISTOR, CHIP 220 1/10W(1608)
R1519	1-218-895-11	s	RESISTOR,CHIP 100K 1/10W(1608)
R1520	1-218-831-11	s	RESISTOR, CHIP 220 1/10W(1608)
R1521	1-216-864-11	s	CONDUCTOR, CHIP (1608)
R1522	1-216-864-11	s	CONDUCTOR, CHIP (1608)
R1523	1-216-864-11	s	CONDUCTOR, CHIP (1608)
R1524	1-218-887-11	s	RESISTOR,CHIP 47K 1/10W (1608)
R1525	1-218-837-11	s	RESISTOR,CHIP 390 1/10W (1608)
R1526	1-218-871-11	s	RESISTOR,CHIP 10K 1/10W (1608)
R1527	1-218-871-11	s	RESISTOR,CHIP 10K 1/10W (1608)
R1530	1-211-977-11	s	RESISTOR,CHIP 22 1/10W (1608)
R1531	1-211-977-11	s	RESISTOR,CHIP 22 1/10W (1608)
R1532	1-211-977-11	s	RESISTOR,CHIP 22 1/10W (1608)
R1533	1-211-977-11	s	RESISTOR,CHIP 22 1/10W (1608)
R1534	1-211-977-11	s	RESISTOR,CHIP 22 1/10W (1608)
R1535	1-211-977-11	s	RESISTOR,CHIP 22 1/10W (1608)
R1536	1-211-977-11	s	RESISTOR,CHIP 22 1/10W (1608)
R1537	1-211-977-11	s	RESISTOR,CHIP 22 1/10W (1608)
R1538	1-218-895-11	s	RESISTOR,CHIP 100K 1/10W(1608)
R1539	1-218-895-11	s	RESISTOR,CHIP 100K 1/10W(1608)
R1540	1-218-895-11	s	RESISTOR,CHIP 100K 1/10W(1608)
R1541	1-218-895-11	s	RESISTOR,CHIP 100K 1/10W(1608)
R1544	1-218-895-11	s	RESISTOR,CHIP 100K 1/10W(1608)
R1545	1-218-895-11	s	RESISTOR,CHIP 100K 1/10W(1608)
R1546	1-218-863-11	s	RESISTOR,CHIP 4.7K 1/10W(1608)
R1547	1-218-863-11	s	RESISTOR,CHIP 4.7K 1/10W(1608)
R1548	1-218-871-11	s	RESISTOR,CHIP 10K 1/10W (1608)
R1549	1-218-871-11	s	RESISTOR,CHIP 10K 1/10W (1608)
R1550	1-218-847-11	s	RESISTOR, CHIP 1K 1/10W (1608)
R1551	1-218-847-11	s	RESISTOR, CHIP 1K 1/10W (1608)
R1552	1-218-847-11	s	RESISTOR, CHIP 1K 1/10W (1608)
R1553	1-218-863-11	s	RESISTOR,CHIP 4.7K 1/10W(1608)
R1554	1-218-871-11	s	RESISTOR,CHIP 10K 1/10W (1608)
R1555	1-211-977-11	s	RESISTOR,CHIP 22 1/10W (1608)
R1556	1-211-985-11	s	RESISTOR,CHIP 47 1/10W (1608)
R1557	1-218-895-11	s	RESISTOR,CHIP 100K 1/10W(1608)
R1558	1-216-864-11	s	CONDUCTOR, CHIP (1608)
R1590	1-218-847-11	s	RESISTOR, CHIP 1K 1/10W (1608)
R1591	1-218-847-11	s	RESISTOR, CHIP 1K 1/10W (1608)
R1592	1-218-835-11	s	RESISTOR,CHIP 330 1/10W (1608)
R1593	1-218-835-11	s	RESISTOR,CHIP 330 1/10W (1608)
R1594	1-218-871-11	s	RESISTOR,CHIP 10K 1/10W (1608)
RB700	1-233-411-11	s	RESISTOR,CHIP NETWORK 220/3216
RB701	1-233-411-11	s	RESISTOR,CHIP NETWORK 220/3216
RB702	1-233-411-11	s	RESISTOR,CHIP NETWORK 220/3216
RB703	1-233-411-11	s	RESISTOR,CHIP NETWORK 220/3216
RB704	1-233-411-11	s	RESISTOR,CHIP NETWORK 220/3216
RB705	1-233-411-11	s	RESISTOR,CHIP NETWORK 220/3216
RB719	1-236-908-11	s	RESISTOR,NETWORK 10K (3216)
RB720	1-236-908-11	s	RESISTOR,NETWORK 10K (3216)
RB800	1-233-411-11	s	RESISTOR,CHIP NETWORK 220/3216
RB801	1-233-411-11	s	RESISTOR,CHIP NETWORK 220/3216
RB802	1-233-411-11	s	RESISTOR,CHIP NETWORK 220/3216
RB803	1-233-411-11	s	RESISTOR,CHIP NETWORK 220/3216
RB804	1-233-411-11	s	RESISTOR,CHIP NETWORK 220/3216
RB805	1-233-411-11	s	RESISTOR,CHIP NETWORK 220/3216
RB806	1-233-411-11	s	RESISTOR,CHIP NETWORK 220/3216

(VPR-64A BOARD [SUFFIX 17-] for HDW and MSW PLAYER)

Ref. No. or Q'ty	Part No.	SP	Description
RB807	1-233-411-11	s	RESISTOR,CHIP NETWORK 220/3216
RB808	1-233-411-11	s	RESISTOR,CHIP NETWORK 220/3216
RB809	1-233-411-11	s	RESISTOR,CHIP NETWORK 220/3216
RB1100	1-233-411-11	s	RESISTOR,CHIP NETWORK 220/3216
RB1101	1-233-411-11	s	RESISTOR,CHIP NETWORK 220/3216
RB1500	1-234-397-11	s	NETWORK, RES (8 GANG) 100K
RB1501	1-234-397-11	s	NETWORK, RES (8 GANG) 100K
RB1502	1-234-397-11	s	NETWORK, RES (8 GANG) 100K
RB1503	1-234-397-11	s	NETWORK, RES (8 GANG) 100K
RB1504	1-234-397-11	s	NETWORK, RES (8 GANG) 100K
RB1505	1-234-397-11	s	NETWORK, RES (8 GANG) 100K
RB1506	1-234-397-11	s	NETWORK, RES (8 GANG) 100K
RB1507	1-234-397-11	s	NETWORK, RES (8 GANG) 100K
RB1508	1-234-397-11	s	NETWORK, RES (8 GANG) 100K
RB1509	1-234-397-11	s	NETWORK, RES (8 GANG) 100K
TH100	1-810-812-11	s	THERMISTOR, NTC (1608)
TP800	1-535-877-22	s	CHIP,CHECKER (TEST POINT)
TP900	1-535-877-22	s	CHIP,CHECKER (TEST POINT)
TP901	1-535-877-22	s	CHIP,CHECKER (TEST POINT)
TP902	1-535-877-22	s	CHIP,CHECKER (TEST POINT)
TP903	1-535-877-22	s	CHIP,CHECKER (TEST POINT)
TP904	1-535-877-22	s	CHIP,CHECKER (TEST POINT)
TP905	1-535-877-22	s	CHIP,CHECKER (TEST POINT)
TP906	1-535-877-22	s	CHIP,CHECKER (TEST POINT)
TP907	1-535-877-22	s	CHIP,CHECKER (TEST POINT)
TP908	1-535-877-22	s	CHIP,CHECKER (TEST POINT)
TP909	1-535-877-22	s	CHIP,CHECKER (TEST POINT)
TP910	1-535-877-22	s	CHIP,CHECKER (TEST POINT)
TP911	1-535-877-22	s	CHIP,CHECKER (TEST POINT)
TP1100	1-535-877-22	s	CHIP,CHECKER (TEST POINT)
TP1200	1-535-877-22	s	CHIP,CHECKER (TEST POINT)
TP1201	1-535-877-22	s	CHIP,CHECKER (TEST POINT)
X900	1-813-251-11	s	OSCILLATOR, CRYSTAL
X901	1-813-252-11	s	OSCILLATOR, CRYSTAL
X1203	1-795-764-11	s	OSCILLATOR, CRYSTAL
X1204	1-795-761-11	s	OSCILLATOR, CRYSTAL
X1205	1-795-762-11	s	OSCILLATOR, CRYSTAL
X1206	1-813-253-11	s	OSCILLATOR, CRYSTAL

VPR-91 BOARD

[Lot No. 434 -] DVW-2000/P, M2000/P

*1: [Lot No. 434 -] [Board No. suffix 11 -]
*2: [Lot No. 441 -] [Board No. suffix 12 -]

Ref. No. or Q'ty	Part No.	SP	Description
1pc	A-8348-010-A	s	MOUNTED CIRCUIT BOARD, VPR-91
C100	1-131-992-11	s	CAP, CERAMIC 100000PF F 1608
C101	1-131-992-11	s	CAP, CERAMIC 100000PF F 1608
C102	1-131-992-11	s	CAP, CERAMIC 100000PF F 1608
C103	1-131-992-11	s	CAP, CERAMIC 100000PF F 1608
C104	1-131-999-11	s	CAPACITOR,SOLID ELECT 150MF
C105	1-131-999-11	s	CAPACITOR,SOLID ELECT 150MF
C106	1-131-992-11	s	CAP, CERAMIC 100000PF F 1608
C107	1-131-992-11	s	CAP, CERAMIC 100000PF F 1608
C108	1-162-970-11	s	CAPACITOR CERAMIC 0.01MF/25V B
C109	1-162-921-11	s	CAPACITOR,CERAMIC 33PF/50V CH
C112	1-164-230-11	s	CAPACITOR,CERAMIC 220PF/50V
C113	1-131-992-11	s	CAP, CERAMIC 100000PF F 1608
C114	1-131-992-11	s	CAP, CERAMIC 100000PF F 1608
C119	1-131-992-11	s	CAP, CERAMIC 100000PF F 1608
C120	1-131-992-11	s	CAP, CERAMIC 100000PF F 1608
C121	1-131-992-11	s	CAP, CERAMIC 100000PF F 1608
C122	1-127-692-11	s	CAP, CHIP CERAMIC 10MF B 3216
C125	1-131-992-11	s	CAP, CERAMIC 100000PF F 1608
C127	1-131-992-11	s	CAP, CERAMIC 100000PF F 1608
C129	1-131-992-11	s	CAP, CERAMIC 100000PF F 1608
C130	1-131-992-11	s	CAP, CERAMIC 100000PF F 1608
C131	1-131-992-11	s	CAP, CERAMIC 100000PF F 1608
C132	1-131-992-11	s	CAP, CERAMIC 100000PF F 1608
C133	1-131-992-11	s	CAP, CERAMIC 100000PF F 1608
C134	1-127-573-11	s	CAPACITOR,CERAMIC 1MFB(2012)
C135	1-162-921-11	s	CAPACITOR,CERAMIC 33PF/50V CH
C136	1-131-992-11	s	CAP, CERAMIC 100000PF F 1608
C137	1-131-992-11	s	CAP, CERAMIC 100000PF F 1608
C138	1-164-230-11	s	CAPACITOR,CERAMIC 220PF/50V
C140	1-131-992-11	s	CAP, CERAMIC 100000PF F 1608
C141	1-131-992-11	s	CAP, CERAMIC 100000PF F 1608
C142	1-131-992-11	s	CAP, CERAMIC 100000PF F 1608
C143	1-131-992-11	s	CAP, CERAMIC 100000PF F 1608
C144	1-115-416-11	s	CAPACITOR,CERAMIC 1000PF/25V
C145	1-131-992-11	s	CAP, CERAMIC 100000PF F 1608
C146	1-164-315-11	s	CAPACITOR,CERAMIC 470PF/50V CH
C147	1-115-416-11	s	CAPACITOR,CERAMIC 1000PF/25V
C148	1-115-416-11	s	CAPACITOR,CERAMIC 1000PF/25V
C149	1-164-315-11	s	CAPACITOR,CERAMIC 470PF/50V CH
C150	1-131-992-11	s	CAP, CERAMIC 100000PF F 1608
C151	1-162-927-11	s	CAPACITOR,CERAMIC 100PF/50V CH
C152	1-162-927-11	s	CAPACITOR,CERAMIC 100PF/50V CH
C154	1-164-230-11	s	CAPACITOR,CERAMIC 220PF/50V
C155	1-164-230-11	s	CAPACITOR,CERAMIC 220PF/50V
C156	1-131-992-11	s	CAP, CERAMIC 100000PF F 1608
C158	1-131-992-11	s	CAP, CERAMIC 100000PF F 1608
C160	1-131-992-11	s	CAP, CERAMIC 100000PF F 1608
C161	1-131-992-11	s	CAP, CERAMIC 100000PF F 1608
C162	1-131-992-11	s	CAP, CERAMIC 100000PF F 1608
C166	1-131-992-11	s	CAP, CERAMIC 100000PF F 1608
C167	1-131-992-11	s	CAP, CERAMIC 100000PF F 1608
C168	1-131-992-11	s	CAP, CERAMIC 100000PF F 1608
C170	1-131-992-11	s	CAP, CERAMIC 100000PF F 1608

(VPR-91 BOARD)

Ref. No. or Q'ty	Part No.	SP	Description
C171	1-131-992-11	s	CAP, CERAMIC 100000PF F 1608
C172	1-131-992-11	s	CAP, CERAMIC 100000PF F 1608
C175	1-165-811-11	s	CAPACITOR CHIP CERAMIC 22MF B
C176	1-131-992-11	s	CAP, CERAMIC 100000PF F 1608
C177	1-131-992-11	s	CAP, CERAMIC 100000PF F 1608
C178	1-131-992-11	s	CAP, CERAMIC 100000PF F 1608
C179	1-131-992-11	s	CAP, CERAMIC 100000PF F 1608
C180	1-115-416-11	s	CAPACITOR,CERAMIC 1000PF/25V
C181	1-115-416-11	s	CAPACITOR,CERAMIC 1000PF/25V
C182	1-165-811-11	s	CAPACITOR CHIP CERAMIC 22MF B
C183	1-131-992-11	s	CAP, CERAMIC 100000PF F 1608
C185	1-162-970-11	s	CAPACITOR CERAMIC 0.01MF/25V B
C186	1-131-992-11	s	CAP, CERAMIC 100000PF F 1608
C187	1-131-992-11	s	CAP, CERAMIC 100000PF F 1608
C189	1-131-992-11	s	CAP, CERAMIC 100000PF F 1608
C191	1-127-692-11	s	CAP, CHIP CERAMIC 10MF B 3216
C192	1-119-662-11	s	CAPACITOR,CERAMIC 150PF (1608)
C193	1-165-811-11	s	CAPACITOR CHIP CERAMIC 22MF B
C195	1-165-811-11	s	CAPACITOR CHIP CERAMIC 22MF B
C196	1-131-992-11	s	CAP, CERAMIC 100000PF F 1608
C197	1-131-992-11	s	CAP, CERAMIC 100000PF F 1608
C198	1-131-992-11	s	CAP, CERAMIC 100000PF F 1608
C199	1-131-992-11	s	CAP, CERAMIC 100000PF F 1608
C201	1-131-992-11	s	CAP, CERAMIC 100000PF F 1608
C202	1-131-992-11	s	CAP, CERAMIC 100000PF F 1608
C203	1-131-992-11	s	CAP, CERAMIC 100000PF F 1608
C207	1-131-992-11	s	CAP, CERAMIC 100000PF F 1608
C208	1-131-992-11	s	CAP, CERAMIC 100000PF F 1608
C209	1-131-992-11	s	CAP, CERAMIC 100000PF F 1608
C210	1-131-992-11	s	CAP, CERAMIC 100000PF F 1608
C212	1-131-992-11	s	CAP, CERAMIC 100000PF F 1608
C213	1-131-992-11	s	CAP, CERAMIC 100000PF F 1608
C214	1-131-992-11	s	CAP, CERAMIC 100000PF F 1608
C215	1-131-992-11	s	CAP, CERAMIC 100000PF F 1608
C216	1-131-992-11	s	CAP, CERAMIC 100000PF F 1608
C217	1-131-992-11	s	CAP, CERAMIC 100000PF F 1608
C219	1-115-416-11	s	CAPACITOR,CERAMIC 1000PF/25V
C220	1-131-992-11	s	CAP, CERAMIC 100000PF F 1608
C222	1-127-692-11	s	CAP, CHIP CERAMIC 10MF B 3216
C223	1-131-992-11	s	CAP, CERAMIC 100000PF F 1608
C224	1-131-999-11	s	CAPACITOR,SOLID ELECT 150MF
C225	1-131-992-11	s	CAP, CERAMIC 100000PF F 1608
C226	1-131-992-11	s	CAP, CERAMIC 100000PF F 1608
C227	1-164-460-11	s	CAPACITOR, CERAMIC 62PF/50V
C228	1-164-378-11	s	CAPACITOR CERAMIC 30PF/50V CH
C229	1-162-920-11	s	CAPACITOR,CERAMIC 27PF/50V CH
C230	1-164-185-11	s	CAPACITOR,CERAMIC 13PF/50V SL
C231	1-164-460-11	s	CAPACITOR, CERAMIC 62PF/50V
C232	1-162-921-11	s	CAPACITOR,CERAMIC 33PF/50V CH
C233	1-164-460-11	s	CAPACITOR, CERAMIC 62PF/50V
C235	1-162-915-11	s	CAPACITOR,CERAMIC 10PF/50V CH
C236	1-162-908-11	s	CAPACITOR,CERAMIC 3PF/50V 1608
C302	1-128-590-11	s	CAPACITOR ELECT 100MF/6.3V(105
C303	1-131-992-11	s	CAP, CERAMIC 100000PF F 1608
C305	1-131-992-11	s	CAP, CERAMIC 100000PF F 1608
C307	1-131-992-11	s	CAP, CERAMIC 100000PF F 1608
C309	1-131-992-11	s	CAP, CERAMIC 100000PF F 1608
C311	1-131-992-11	s	CAP, CERAMIC 100000PF F 1608
C313	1-131-992-11	s	CAP, CERAMIC 100000PF F 1608

(VPR-91 BOARD)

Ref. No. or Q'ty	Part No.	SP	Description
C314	1-131-992-11	s	CAP, CERAMIC 100000PF F 1608
C315	1-131-992-11	s	CAP, CERAMIC 100000PF F 1608
C316	1-127-715-11	s	CAPACITOR,CERAMIC 0.22MF B1608
C317	1-131-992-11	s	CAP, CERAMIC 100000PF F 1608
C318	1-131-992-11	s	CAP, CERAMIC 100000PF F 1608
C320	1-131-992-11	s	CAP, CERAMIC 100000PF F 1608
C321	1-131-992-11	s	CAP, CERAMIC 100000PF F 1608
C322	1-162-970-11	s	CAPACITOR CERAMIC 0.01MF/25V B
C325	1-131-992-11	s	CAP, CERAMIC 100000PF F 1608
C326	1-131-992-11	s	CAP, CERAMIC 100000PF F 1608
C327	1-131-992-11	s	CAP, CERAMIC 100000PF F 1608
C328	1-131-992-11	s	CAP, CERAMIC 100000PF F 1608
C330	1-131-992-11	s	CAP, CERAMIC 100000PF F 1608
C333	1-131-992-11	s	CAP, CERAMIC 100000PF F 1608
C335	1-127-760-11	s	CAPACITOR,CERAMIC 4.7MF/6.3V
C336	1-131-992-11	s	CAP, CERAMIC 100000PF F 1608
C338	1-128-590-11	s	CAPACITOR ELECT 100MF/6.3V(105
C339	1-125-837-91	s	CAPACITOR,CHIP CERAMIC1MF/6.3V
C340	1-125-837-91	s	CAPACITOR,CHIP CERAMIC1MF/6.3V
C341	1-125-837-91	s	CAPACITOR,CHIP CERAMIC1MF/6.3V
C342	1-131-992-11	s	CAP, CERAMIC 100000PF F 1608
C344	1-131-992-11	s	CAP, CERAMIC 100000PF F 1608
C346	1-131-992-11	s	CAP, CERAMIC 100000PF F 1608
C348	1-131-992-11	s	CAP, CERAMIC 100000PF F 1608
C350	1-131-992-11	s	CAP, CERAMIC 100000PF F 1608
C352	1-131-992-11	s	CAP, CERAMIC 100000PF F 1608
C356	1-131-992-11	s	CAP, CERAMIC 100000PF F 1608
C358	1-162-927-11	s	CAPACITOR,CERAMIC 100PF/50V CH
C359	1-131-992-11	s	CAP, CERAMIC 100000PF F 1608
C360	1-125-889-11	s	CAPACITOR, CERAMIC 2.2MF
C362	1-131-992-11	s	CAP, CERAMIC 100000PF F 1608
C364	1-131-992-11	s	CAP, CERAMIC 100000PF F 1608
C365	1-125-889-11	s	CAPACITOR, CERAMIC 2.2MF
C366	1-107-826-11	s	CAPACITOR,CHIP CERAMIC 0.1MF
C367	1-162-927-11	s	CAPACITOR,CERAMIC 100PF/50V CH
C503	1-131-992-11	s	CAP, CERAMIC 100000PF F 1608
C504	1-131-992-11	s	CAP, CERAMIC 100000PF F 1608
C506	1-131-992-11	s	CAP, CERAMIC 100000PF F 1608
C507	1-164-813-11	s	CAPACITOR,CERAMIC 15PF/50V CH
C509	1-162-926-11	s	CAPACITOR,CERAMIC 82PF/50V CH
C510	1-131-992-11	s	CAP, CERAMIC 100000PF F 1608
C511	1-131-992-11	s	CAP, CERAMIC 100000PF F 1608
C512	1-131-992-11	s	CAP, CERAMIC 100000PF F 1608
C513	1-131-992-11	s	CAP, CERAMIC 100000PF F 1608
C514	1-131-992-11	s	CAP, CERAMIC 100000PF F 1608
C515	1-131-992-11	s	CAP, CERAMIC 100000PF F 1608
C516	1-131-992-11	s	CAP, CERAMIC 100000PF F 1608
C517	1-164-315-11	s	CAPACITOR,CERAMIC 470PF/50V CH
C518	1-162-926-11	s	CAPACITOR,CERAMIC 82PF/50V CH
C519	1-162-928-11	s	CAPACITOR,CERAMIC 120PF/50V CH
C520	1-162-923-11	s	CAPACITOR,CERAMIC 47PF/50V CH
C521	1-162-923-11	s	CAPACITOR,CERAMIC 47PF/50V CH
C522	1-164-230-11	s	CAPACITOR,CERAMIC 220PF/50V
C523	1-164-230-11	s	CAPACITOR,CERAMIC 220PF/50V
C524	1-162-926-11	s	CAPACITOR,CERAMIC 82PF/50V CH
C528	1-162-970-11	s	CAPACITOR CERAMIC 0.01MF/25V B
C537	1-127-954-11	s	CAPACITOR,CHIP FILM 0.047MF
C538	1-131-992-11	s	CAP, CERAMIC 100000PF F 1608
C539	1-131-992-11	s	CAP, CERAMIC 100000PF F 1608

(VPR-91 BOARD)

Ref. No. or Q'ty	Part No.	SP	Description
C540	1-131-992-11	s	CAP, CERAMIC 100000PF F 1608
C541	1-107-826-11	s	CAPACITOR,CHIP CERAMIC 0.1MF
C542	1-107-826-11	s	CAPACITOR,CHIP CERAMIC 0.1MF
C543	1-107-826-11	s	CAPACITOR,CHIP CERAMIC 0.1MF
C544	1-131-992-11	s	CAP, CERAMIC 100000PF F 1608
C545	1-131-992-11	s	CAP, CERAMIC 100000PF F 1608
C546	1-127-715-11	s	CAPACITOR,CERAMIC 0.22MF B1608
C547	1-127-715-11	s	CAPACITOR,CERAMIC 0.22MF B1608
C548	1-127-715-11	s	CAPACITOR,CERAMIC 0.22MF B1608
C549	1-131-992-11	s	CAP, CERAMIC 100000PF F 1608
C550	1-162-928-11	s	CAPACITOR,CERAMIC 120PF/50V CH
C551	1-131-992-11	s	CAP, CERAMIC 100000PF F 1608
C552	1-131-992-11	s	CAP, CERAMIC 100000PF F 1608
C553	1-131-992-11	s	CAP, CERAMIC 100000PF F 1608
C554	1-131-992-11	s	CAP, CERAMIC 100000PF F 1608
C555	1-131-992-11	s	CAP, CERAMIC 100000PF F 1608
C556	1-131-992-11	s	CAP, CERAMIC 100000PF F 1608
C557	1-131-992-11	s	CAP, CERAMIC 100000PF F 1608
C558	1-127-692-11	s	CAP, CHIP CERAMIC 10MF B 3216
C559	1-127-692-11	s	CAP, CHIP CERAMIC 10MF B 3216
C560	1-127-692-11	s	CAP, CHIP CERAMIC 10MF B 3216
C562	1-131-992-11	s	CAP, CERAMIC 100000PF F 1608
C564	1-128-451-11	s	CAPACITOR ELECT 22MF/16V(105C)
C565	1-131-992-11	s	CAP, CERAMIC 100000PF F 1608
C566	1-131-992-11	s	CAP, CERAMIC 100000PF F 1608
C567	1-131-992-11	s	CAP, CERAMIC 100000PF F 1608
C568	1-131-992-11	s	CAP, CERAMIC 100000PF F 1608
C569	1-162-927-11	s	CAPACITOR,CERAMIC 100PF/50V CH
C570	1-162-927-11	s	CAPACITOR,CERAMIC 100PF/50V CH
C573	1-162-970-11	s	CAPACITOR CERAMIC 0.01MF/25V B
C576	1-162-970-11	s	CAPACITOR CERAMIC 0.01MF/25V B
C577	1-165-811-11	s	CAPACITOR CHIP CERAMIC 22MF B
C578	1-165-811-11	s	CAPACITOR CHIP CERAMIC 22MF B
C579	1-165-811-11	s	CAPACITOR CHIP CERAMIC 22MF B
C580	1-165-811-11	s	CAPACITOR CHIP CERAMIC 22MF B
C581	1-162-923-11	s	CAPACITOR,CERAMIC 47PF/50V CH
C582	1-162-923-11	s	CAPACITOR,CERAMIC 47PF/50V CH
C583	1-131-992-11	s	CAP, CERAMIC 100000PF F 1608
C584	1-131-992-11	s	CAP, CERAMIC 100000PF F 1608
C585	1-131-992-11	s	CAP, CERAMIC 100000PF F 1608
C586	1-131-992-11	s	CAP, CERAMIC 100000PF F 1608
C589	1-128-451-11	s	CAPACITOR ELECT 22MF/16V(105C)
C590	1-131-992-11	s	CAP, CERAMIC 100000PF F 1608
C593	1-165-811-11	s	CAPACITOR CHIP CERAMIC 22MF B
C594	1-165-811-11	s	CAPACITOR CHIP CERAMIC 22MF B
C595	1-131-992-11	s	CAP, CERAMIC 100000PF F 1608
C596	1-131-992-11	s	CAP, CERAMIC 100000PF F 1608
C597	1-162-923-11	s	CAPACITOR,CERAMIC 47PF/50V CH
C598	1-131-992-11	s	CAP, CERAMIC 100000PF F 1608
C599	1-131-992-11	s	CAP, CERAMIC 100000PF F 1608
C600	1-131-992-11	s	CAP, CERAMIC 100000PF F 1608
C601	1-131-992-11	s	CAP, CERAMIC 100000PF F 1608
C602	1-131-992-11	s	CAP, CERAMIC 100000PF F 1608
C603	1-131-999-11	s	CAPACITOR,SOLID ELECT 150MF
C604	1-131-992-11	s	CAP, CERAMIC 100000PF F 1608
C605	1-131-992-11	s	CAP, CERAMIC 100000PF F 1608
C606	1-131-999-11	s	CAPACITOR,SOLID ELECT 150MF
C609	1-137-894-21	s	CAPACITOR,ELECT(CIHP TYPE) 470
C610	1-131-992-11	s	CAP, CERAMIC 100000PF F 1608

(VPR-91 BOARD)

Ref. No. or Q'ty	Part No.	SP	Description
C611	1-131-992-11	s	CAP, CERAMIC 100000PF F 1608
C612	1-131-992-11	s	CAP, CERAMIC 100000PF F 1608
C613	1-131-992-11	s	CAP, CERAMIC 100000PF F 1608
C614	1-131-992-11	s	CAP, CERAMIC 100000PF F 1608
C700	1-131-992-11	s	CAP, CERAMIC 100000PF F 1608
C701	1-131-992-11	s	CAP, CERAMIC 100000PF F 1608
C702	1-131-992-11	s	CAP, CERAMIC 100000PF F 1608
C703	1-131-992-11	s	CAP, CERAMIC 100000PF F 1608
C704	1-131-992-11	s	CAP, CERAMIC 100000PF F 1608
C714	1-131-992-11	s	CAP, CERAMIC 100000PF F 1608
C715	1-131-992-11	s	CAP, CERAMIC 100000PF F 1608
C716	1-131-992-11	s	CAP, CERAMIC 100000PF F 1608
C717	1-131-992-11	s	CAP, CERAMIC 100000PF F 1608
C718	1-131-992-11	s	CAP, CERAMIC 100000PF F 1608
C719	1-131-992-11	s	CAP, CERAMIC 100000PF F 1608
C720	1-131-992-11	s	CAP, CERAMIC 100000PF F 1608
C721	1-131-992-11	s	CAP, CERAMIC 100000PF F 1608
C722	1-131-992-11	s	CAP, CERAMIC 100000PF F 1608
C723	1-131-992-11	s	CAP, CERAMIC 100000PF F 1608
C724	1-131-992-11	s	CAP, CERAMIC 100000PF F 1608
C725	1-131-992-11	s	CAP, CERAMIC 100000PF F 1608
C726	1-131-992-11	s	CAP, CERAMIC 100000PF F 1608
C727	1-131-992-11	s	CAP, CERAMIC 100000PF F 1608
C728	1-131-992-11	s	CAP, CERAMIC 100000PF F 1608
C729	1-131-992-11	s	CAP, CERAMIC 100000PF F 1608
C730	1-131-992-11	s	CAP, CERAMIC 100000PF F 1608
C731	1-131-992-11	s	CAP, CERAMIC 100000PF F 1608
C732	1-131-992-11	s	CAP, CERAMIC 100000PF F 1608
C733	1-131-992-11	s	CAP, CERAMIC 100000PF F 1608
C734	1-131-992-11	s	CAP, CERAMIC 100000PF F 1608
C735	1-131-992-11	s	CAP, CERAMIC 100000PF F 1608
C736	1-127-760-11	s	CAPACITOR,CERAMIC 4.7MF/6.3V
C739	1-128-590-11	s	CAPACITOR ELECT 100MF/6.3V(105
C751	1-131-992-11	s	CAP, CERAMIC 100000PF F 1608
C752	1-131-992-11	s	CAP, CERAMIC 100000PF F 1608
C753	1-131-992-11	s	CAP, CERAMIC 100000PF F 1608
C754	1-131-992-11	s	CAP, CERAMIC 100000PF F 1608
C755	1-131-992-11	s	CAP, CERAMIC 100000PF F 1608
C756	1-131-992-11	s	CAP, CERAMIC 100000PF F 1608
C790	1-131-992-11	s	CAP, CERAMIC 100000PF F 1608
C791	1-131-992-11	s	CAP, CERAMIC 100000PF F 1608
C792	1-131-992-11	s	CAP, CERAMIC 100000PF F 1608
C793	1-131-992-11	s	CAP, CERAMIC 100000PF F 1608
C794	1-131-992-11	s	CAP, CERAMIC 100000PF F 1608
C795	1-131-992-11	s	CAP, CERAMIC 100000PF F 1608
C796	1-131-992-11	s	CAP, CERAMIC 100000PF F 1608
C797	1-131-992-11	s	CAP, CERAMIC 100000PF F 1608
C800	1-131-992-11	s	CAP, CERAMIC 100000PF F 1608
C801	1-131-992-11	s	CAP, CERAMIC 100000PF F 1608
C802	1-131-992-11	s	CAP, CERAMIC 100000PF F 1608
C803	1-131-992-11	s	CAP, CERAMIC 100000PF F 1608
C804	1-131-992-11	s	CAP, CERAMIC 100000PF F 1608
C805	1-131-992-11	s	CAP, CERAMIC 100000PF F 1608
C806	1-131-992-11	s	CAP, CERAMIC 100000PF F 1608
C807	1-131-992-11	s	CAP, CERAMIC 100000PF F 1608
C808	1-131-992-11	s	CAP, CERAMIC 100000PF F 1608
C809	1-131-992-11	s	CAP, CERAMIC 100000PF F 1608
C810	1-131-992-11	s	CAP, CERAMIC 100000PF F 1608
C811	1-131-992-11	s	CAP, CERAMIC 100000PF F 1608

(VPR-91 BOARD)

Ref. No. or Q'ty	Part No.	SP	Description
C812	1-131-992-11	s	CAP, CERAMIC 100000PF F 1608
C813	1-131-992-11	s	CAP, CERAMIC 100000PF F 1608
C814	1-131-992-11	s	CAP, CERAMIC 100000PF F 1608
C815	1-131-992-11	s	CAP, CERAMIC 100000PF F 1608
C816	1-131-992-11	s	CAP, CERAMIC 100000PF F 1608
C817	1-131-992-11	s	CAP, CERAMIC 100000PF F 1608
C818	1-131-992-11	s	CAP, CERAMIC 100000PF F 1608
C819	1-131-992-11	s	CAP, CERAMIC 100000PF F 1608
C820	1-131-992-11	s	CAP, CERAMIC 100000PF F 1608
C821	1-131-992-11	s	CAP, CERAMIC 100000PF F 1608
C822	1-131-992-11	s	CAP, CERAMIC 100000PF F 1608
C823	1-131-992-11	s	CAP, CERAMIC 100000PF F 1608
C824	1-131-992-11	s	CAP, CERAMIC 100000PF F 1608
C825	1-131-992-11	s	CAP, CERAMIC 100000PF F 1608
C826	1-131-992-11	s	CAP, CERAMIC 100000PF F 1608
C827	1-131-992-11	s	CAP, CERAMIC 100000PF F 1608
C828	1-131-992-11	s	CAP, CERAMIC 100000PF F 1608
C829	1-131-992-11	s	CAP, CERAMIC 100000PF F 1608
C838	1-131-992-11	s	CAP, CERAMIC 100000PF F 1608
C839	1-131-992-11	s	CAP, CERAMIC 100000PF F 1608
C840	1-131-992-11	s	CAP, CERAMIC 100000PF F 1608
C849	1-131-992-11	s	CAP, CERAMIC 100000PF F 1608
C850	1-131-992-11	s	CAP, CERAMIC 100000PF F 1608
C851	1-131-992-11	s	CAP, CERAMIC 100000PF F 1608
C852	1-131-992-11	s	CAP, CERAMIC 100000PF F 1608
C853	1-131-992-11	s	CAP, CERAMIC 100000PF F 1608
C854	1-131-992-11	s	CAP, CERAMIC 100000PF F 1608
C855	1-131-992-11	s	CAP, CERAMIC 100000PF F 1608
C856	1-131-992-11	s	CAP, CERAMIC 100000PF F 1608
C857	1-131-992-11	s	CAP, CERAMIC 100000PF F 1608
C858	1-131-992-11	s	CAP, CERAMIC 100000PF F 1608
C859	1-131-992-11	s	CAP, CERAMIC 100000PF F 1608
C860	1-131-992-11	s	CAP, CERAMIC 100000PF F 1608
C901	1-127-760-11	s	CAPACITOR,CERAMIC 4.7MF/6.3V
C904	1-128-590-11	s	CAPACITOR ELECT 100MF/6.3V(105
C905	1-128-590-11	s	CAPACITOR ELECT 100MF/6.3V(105
C907	1-131-992-11	s	CAP, CERAMIC 100000PF F 1608
C908	1-131-992-11	s	CAP, CERAMIC 100000PF F 1608
C911	1-131-992-11	s	CAP, CERAMIC 100000PF F 1608
C912	1-131-992-11	s	CAP, CERAMIC 100000PF F 1608
C915	1-131-992-11	s	CAP, CERAMIC 100000PF F 1608
C916	1-131-992-11	s	CAP, CERAMIC 100000PF F 1608
C917	1-131-992-11	s	CAP, CERAMIC 100000PF F 1608
C918	1-131-992-11	s	CAP, CERAMIC 100000PF F 1608
C919	1-131-992-11	s	CAP, CERAMIC 100000PF F 1608
C921	1-131-992-11	s	CAP, CERAMIC 100000PF F 1608
C923	1-131-992-11	s	CAP, CERAMIC 100000PF F 1608
C924	1-131-992-11	s	CAP, CERAMIC 100000PF F 1608
C925	1-131-992-11	s	CAP, CERAMIC 100000PF F 1608
C926	1-131-992-11	s	CAP, CERAMIC 100000PF F 1608
C927	1-131-992-11	s	CAP, CERAMIC 100000PF F 1608
C928	1-131-992-11	s	CAP, CERAMIC 100000PF F 1608
C929	1-165-811-11	s	CAPACITOR CHIP CERAMIC 22MF B
C930	1-131-992-11	s	CAP, CERAMIC 100000PF F 1608
C931	1-131-992-11	s	CAP, CERAMIC 100000PF F 1608
C932	1-128-590-11	s	CAPACITOR ELECT 100MF/6.3V(105
C935	1-131-992-11	s	CAP, CERAMIC 100000PF F 1608
C937	1-127-760-11	s	CAPACITOR,CERAMIC 4.7MF/6.3V
C938	1-131-992-11	s	CAP, CERAMIC 100000PF F 1608

(VPR-91 BOARD)

Ref. No. or Q'ty	Part No.	SP	Description
C940	1-131-992-11	s	CAP, CERAMIC 100000PF F 1608
C942	1-131-992-11	s	CAP, CERAMIC 100000PF F 1608
C944	1-131-992-11	s	CAP, CERAMIC 100000PF F 1608
C945	1-131-992-11	s	CAP, CERAMIC 100000PF F 1608
C947	1-128-451-11	s	CAPACITOR ELECT 22MF/16V(105C)
C948	1-131-992-11	s	CAP, CERAMIC 100000PF F 1608
C950	1-127-760-11	s	CAPACITOR,CERAMIC 4.7MF/6.3V
C952	1-131-992-11	s	CAP, CERAMIC 100000PF F 1608
C955	1-131-992-11	s	CAP, CERAMIC 100000PF F 1608
C956	1-131-992-11	s	CAP, CERAMIC 100000PF F 1608
C959	1-128-590-11	s	CAPACITOR ELECT 100MF/6.3V(105
C960	1-131-992-11	s	CAP, CERAMIC 100000PF F 1608
C961	1-131-992-11	s	CAP, CERAMIC 100000PF F 1608
C962	1-131-992-11	s	CAP, CERAMIC 100000PF F 1608
C963	1-131-992-11	s	CAP, CERAMIC 100000PF F 1608
C964	1-131-992-11	s	CAP, CERAMIC 100000PF F 1608
C968	1-131-992-11	s	CAP, CERAMIC 100000PF F 1608
C969	1-131-992-11	s	CAP, CERAMIC 100000PF F 1608
C970	1-131-992-11	s	CAP, CERAMIC 100000PF F 1608
C971	1-131-992-11	s	CAP, CERAMIC 100000PF F 1608
C972	1-131-992-11	s	CAP, CERAMIC 100000PF F 1608
C973	1-128-590-11	s	CAPACITOR ELECT 100MF/6.3V(105
C974	1-128-590-11	s	CAPACITOR ELECT 100MF/6.3V(105
C975	1-128-590-11	s	CAPACITOR ELECT 100MF/6.3V(105
C976	1-131-992-11	s	CAP, CERAMIC 100000PF F 1608
C977	1-131-992-11	s	CAP, CERAMIC 100000PF F 1608
C978	1-131-992-11	s	CAP, CERAMIC 100000PF F 1608
C979	1-162-965-11	s	CAPACITOR,CERAMIC 1500PF/50V B
C980	1-162-965-11	s	CAPACITOR,CERAMIC 1500PF/50V B
C981	1-162-914-11	s	CAPACITOR,CERAMIC 9PF/50V 1608
C982	1-162-914-11	s	CAPACITOR,CERAMIC 9PF/50V 1608
C983	1-162-965-11	s	CAPACITOR,CERAMIC 1500PF/50V B
C984	1-164-218-11	s	CAPACITOR,CERAMIC 180PF/50V CH
C985	1-162-965-11	s	CAPACITOR,CERAMIC 1500PF/50V B
C986	1-164-218-11	s	CAPACITOR,CERAMIC 180PF/50V CH
C987	1-162-908-11	s	CAPACITOR,CERAMIC 3PF/50V 1608
C988	1-162-908-11	s	CAPACITOR,CERAMIC 3PF/50V 1608
C989	1-162-908-11	s	CAPACITOR,CERAMIC 3PF/50V 1608
C990	1-162-909-11	s	CAPACITOR,CERAMIC 4PF/50V CH
C991	1-131-992-11	s	CAP, CERAMIC 100000PF F 1608
C992	1-162-910-11	s	CAPACITOR,CERAMIC 5PF/50V 1608
C996	1-131-992-11	s	CAP, CERAMIC 100000PF F 1608
C997	1-131-992-11	s	CAP, CERAMIC 100000PF F 1608
C998	1-131-992-11	s	CAP, CERAMIC 100000PF F 1608
C999	1-131-992-11	s	CAP, CERAMIC 100000PF F 1608
C1000	1-131-992-11	s	CAP, CERAMIC 100000PF F 1608
C1001	1-131-992-11	s	CAP, CERAMIC 100000PF F 1608
C1002	1-131-992-11	s	CAP, CERAMIC 100000PF F 1608
C1003	1-131-992-11	s	CAP, CERAMIC 100000PF F 1608
C1004	1-162-923-11	s	CAPACITOR,CERAMIC 47PF/50V CH
C1005	1-125-889-11	s	CAPACITOR, CERAMIC 2.2MF
C1006	1-125-889-11	s	CAPACITOR, CERAMIC 2.2MF
C1007	1-125-889-11	s	CAPACITOR, CERAMIC 2.2MF
C1008	1-125-889-11	s	CAPACITOR, CERAMIC 2.2MF
C1014	1-162-927-11	s	CAPACITOR,CERAMIC 100PF/50V CH
C1015	1-127-573-11	s	CAPACITOR,CERAMIC 1MFB(2012)
C1016	1-127-573-11	s	CAPACITOR,CERAMIC 1MFB(2012)
C1017	1-127-573-11	s	CAPACITOR,CERAMIC 1MFB(2012)
C1018	1-127-573-11	s	CAPACITOR,CERAMIC 1MFB(2012)

(VPR-91 BOARD)

Ref. No. or Q'ty	Part No.	SP	Description
C1019	1-162-910-11	s	CAPACITOR,CERAMIC 5PF/50V 1608
C1028	1-162-923-11	s	CAPACITOR,CERAMIC 47PF/50V CH
C1037	1-162-915-11	s	CAPACITOR,CERAMIC 10PF/50V CH
C1038	1-162-910-11	s	CAPACITOR,CERAMIC 5PF/50V 1608
C1039	1-131-992-11	s	CAP, CERAMIC 100000PF F 1608
C1040	1-131-992-11	s	CAP, CERAMIC 100000PF F 1608
C1041	1-162-910-11	s	CAPACITOR,CERAMIC 5PF/50V 1608
C1045	1-131-992-11	s	CAP, CERAMIC 100000PF F 1608
C1046	1-131-992-11	s	CAP, CERAMIC 100000PF F 1608
C1047	1-131-992-11	s	CAP, CERAMIC 100000PF F 1608
C1048	1-131-992-11	s	CAP, CERAMIC 100000PF F 1608
C1049	1-131-992-11	s	CAP, CERAMIC 100000PF F 1608
C1050	1-131-992-11	s	CAP, CERAMIC 100000PF F 1608
C1052	1-162-910-11	s	CAPACITOR,CERAMIC 5PF/50V 1608
C1053	1-162-910-11	s	CAPACITOR,CERAMIC 5PF/50V 1608
C1054	1-131-992-11	s	CAP, CERAMIC 100000PF F 1608
C1055	1-131-992-11	s	CAP, CERAMIC 100000PF F 1608
C1056	1-131-992-11	s	CAP, CERAMIC 100000PF F 1608
C1057	1-131-992-11	s	CAP, CERAMIC 100000PF F 1608
C1060	1-131-992-11	s	CAP, CERAMIC 100000PF F 1608
C1061	1-131-992-11	s	CAP, CERAMIC 100000PF F 1608
C1062	1-131-992-11	s	CAP, CERAMIC 100000PF F 1608
C1063	1-131-992-11	s	CAP, CERAMIC 100000PF F 1608
C1064	1-128-590-11	s	CAPACITOR ELECT 100MF/6.3V(105
C1065	1-128-590-11	s	CAPACITOR ELECT 100MF/6.3V(105
C1066	1-107-826-11	s	CAPACITOR,CHIP CERAMIC 0.1MF
C1067	1-107-826-11	s	CAPACITOR,CHIP CERAMIC 0.1MF
C1068	1-107-826-11	s	CAPACITOR,CHIP CERAMIC 0.1MF
C1069	1-162-923-11	s	CAPACITOR,CERAMIC 47PF/50V CH
C1070	1-135-341-11	s	CAPACITOR,SOLID ELECT 330MF
C1071	1-131-992-11	s	CAP, CERAMIC 100000PF F 1608
C1072	1-131-992-11	s	CAP, CERAMIC 100000PF F 1608
C1100	1-131-992-11	s	CAP, CERAMIC 100000PF F 1608
C1102	1-128-590-11	s	CAPACITOR ELECT 100MF/6.3V(105
C1103	1-128-590-11	s	CAPACITOR ELECT 100MF/6.3V(105
C1104	1-131-992-11	s	CAP, CERAMIC 100000PF F 1608
C1105	1-131-992-11	s	CAP, CERAMIC 100000PF F 1608
C1106	1-131-992-11	s	CAP, CERAMIC 100000PF F 1608
C1107	1-131-992-11	s	CAP, CERAMIC 100000PF F 1608
C1108	1-162-921-11	s	CAPACITOR,CERAMIC 33PF/50V CH
C1109	1-164-230-11	s	CAPACITOR,CERAMIC 220PF/50V
C1110	1-131-992-11	s	CAP, CERAMIC 100000PF F 1608
C1111	1-131-992-11	s	CAP, CERAMIC 100000PF F 1608
C1112	1-164-315-11	s	CAPACITOR,CERAMIC 470PF/50V CH
C1113	1-164-230-11	s	CAPACITOR,CERAMIC 220PF/50V
C1114	1-164-315-11	s	CAPACITOR,CERAMIC 470PF/50V CH
C1115	1-164-230-11	s	CAPACITOR,CERAMIC 220PF/50V
C1116	1-131-992-11	s	CAP, CERAMIC 100000PF F 1608
C1117	1-131-992-11	s	CAP, CERAMIC 100000PF F 1608
C1118	1-162-970-11	s	CAPACITOR CERAMIC 0.01MF/25V B
C1120	1-131-992-11	s	CAP, CERAMIC 100000PF F 1608
C1122	1-127-954-11	s	CAPACITOR,CHIP FILM 0.047MF
C1123	1-131-992-11	s	CAP, CERAMIC 100000PF F 1608
C1124	1-131-992-11	s	CAP, CERAMIC 100000PF F 1608
C1125	1-131-992-11	s	CAP, CERAMIC 100000PF F 1608
C1126	1-131-992-11	s	CAP, CERAMIC 100000PF F 1608
C1127	1-131-992-11	s	CAP, CERAMIC 100000PF F 1608
C1128	1-162-911-11	s	CAPACITOR,CERAMIC 6PF/50V 1608
C1129	1-162-907-11	s	CAPACITOR,CERAMIC 2PF/50V(CK)

(VPR-91 BOARD)

Ref. No. or Q'ty	Part No.	SP	Description
C1130	1-162-921-11	s	CAPACITOR,CERAMIC 33PF/50V CH
C1131	1-162-921-11	s	CAPACITOR,CERAMIC 33PF/50V CH
C1134	1-131-992-11	s	CAP, CERAMIC 100000PF F 1608
C1135	1-131-992-11	s	CAP, CERAMIC 100000PF F 1608
C1136	1-131-992-11	s	CAP, CERAMIC 100000PF F 1608
C1137	1-131-992-11	s	CAP, CERAMIC 100000PF F 1608
C1141	1-131-992-11	s	CAP, CERAMIC 100000PF F 1608
C1142	1-131-992-11	s	CAP, CERAMIC 100000PF F 1608
C1143	1-131-992-11	s	CAP, CERAMIC 100000PF F 1608
C1144	1-131-992-11	s	CAP, CERAMIC 100000PF F 1608
C1145	1-131-992-11	s	CAP, CERAMIC 100000PF F 1608
C1146	1-131-992-11	s	CAP, CERAMIC 100000PF F 1608
C1147	1-131-992-11	s	CAP, CERAMIC 100000PF F 1608
C1148	1-131-992-11	s	CAP, CERAMIC 100000PF F 1608
C1149	1-131-992-11	s	CAP, CERAMIC 100000PF F 1608
C1150	1-131-992-11	s	CAP, CERAMIC 100000PF F 1608
C1151	1-131-992-11	s	CAP, CERAMIC 100000PF F 1608
C1152	1-131-992-11	s	CAP, CERAMIC 100000PF F 1608
C1153	1-107-826-11	s	CAPACITOR,CHIP CERAMIC 0.1MF
C1154	1-107-826-11	s	CAPACITOR,CHIP CERAMIC 0.1MF
C1200	1-131-992-11	s	CAP, CERAMIC 100000PF F 1608
C1203	1-162-925-11	s	CAPACITOR,CERAMIC 68PF/50V CH
C1204	1-164-230-11	s	CAPACITOR,CERAMIC 220PF/50V
C1205	1-162-925-11	s	CAPACITOR,CERAMIC 68PF/50V CH
C1206	1-131-992-11	s	CAP, CERAMIC 100000PF F 1608
C1208	1-131-992-11	s	CAP, CERAMIC 100000PF F 1608
C1209	1-131-992-11	s	CAP, CERAMIC 100000PF F 1608
C1210	1-131-992-11	s	CAP, CERAMIC 100000PF F 1608
C1211	1-131-992-11	s	CAP, CERAMIC 100000PF F 1608
C1213	1-131-992-11	s	CAP, CERAMIC 100000PF F 1608
C1214	1-131-992-11	s	CAP, CERAMIC 100000PF F 1608
C1215	1-162-970-11	s	CAPACITOR CERAMIC 0.01MF/25V B
C1216	1-131-992-11	s	CAP, CERAMIC 100000PF F 1608
C1217	1-131-992-11	s	CAP, CERAMIC 100000PF F 1608
C1218	1-162-919-11	s	CAPACITOR,CERAMIC 22PF/50V CH
C1220	1-131-992-11	s	CAP, CERAMIC 100000PF F 1608
C1221	1-131-992-11	s	CAP, CERAMIC 100000PF F 1608
C1222	1-131-992-11	s	CAP, CERAMIC 100000PF F 1608
C1223	1-162-925-11	s	CAPACITOR,CERAMIC 68PF/50V CH
C1224	1-125-889-11	s	CAPACITOR, CERAMIC 2.2MF
C1225	1-164-230-11	s	CAPACITOR,CERAMIC 220PF/50V
C1227	1-162-925-11	s	CAPACITOR,CERAMIC 68PF/50V CH
C1228	1-162-925-11	s	CAPACITOR,CERAMIC 68PF/50V CH
C1229	1-131-992-11	s	CAP, CERAMIC 100000PF F 1608
C1231	1-131-992-11	s	CAP, CERAMIC 100000PF F 1608
C1232	1-131-992-11	s	CAP, CERAMIC 100000PF F 1608
C1233	1-131-992-11	s	CAP, CERAMIC 100000PF F 1608
C1234	1-131-992-11	s	CAP, CERAMIC 100000PF F 1608
C1235	1-131-992-11	s	CAP, CERAMIC 100000PF F 1608
C1236	1-131-992-11	s	CAP, CERAMIC 100000PF F 1608
C1237	1-131-992-11	s	CAP, CERAMIC 100000PF F 1608
C1238	1-115-412-11	s	CAPACITOR,CERAMIC 680PF/25V CH
C1239	1-131-992-11	s	CAP, CERAMIC 100000PF F 1608
C1241	1-131-992-11	s	CAP, CERAMIC 100000PF F 1608
C1242	1-162-927-11	s	CAPACITOR,CERAMIC 100PF/50V CH
C1245	1-131-992-11	s	CAP, CERAMIC 100000PF F 1608
C1246	1-162-959-11	s	CAPACITOR,CERAMIC 330PF/50V SL
C1249	1-131-992-11	s	CAP, CERAMIC 100000PF F 1608
C1250	1-131-992-11	s	CAP, CERAMIC 100000PF F 1608

(VPR-91 BOARD)

Ref. No. or Q'ty	Part No.	SP	Description
C1251	1-131-992-11	s	CAP, CERAMIC 100000PF F 1608
C1252	1-126-246-11	s	CAPACITOR ELECT 220MF/4V(CHIP)
C1254	1-126-246-11	s	CAPACITOR ELECT 220MF/4V(CHIP)
C1256	1-165-811-11	s	CAPACITOR CHIP CERAMIC 22MF B
C1258	1-131-992-11	s	CAP, CERAMIC 100000PF F 1608
C1259	1-131-992-11	s	CAP, CERAMIC 100000PF F 1608
C1261	1-131-992-11	s	CAP, CERAMIC 100000PF F 1608
C1265	1-131-992-11	s	CAP, CERAMIC 100000PF F 1608
C1266	1-131-992-11	s	CAP, CERAMIC 100000PF F 1608
C1267	1-131-992-11	s	CAP, CERAMIC 100000PF F 1608
C1272	1-131-992-11	s	CAP, CERAMIC 100000PF F 1608
C1273	1-131-992-11	s	CAP, CERAMIC 100000PF F 1608
C1274	1-131-992-11	s	CAP, CERAMIC 100000PF F 1608
C1275	1-131-992-11	s	CAP, CERAMIC 100000PF F 1608
C1276	1-131-992-11	s	CAP, CERAMIC 100000PF F 1608
C1277	1-131-992-11	s	CAP, CERAMIC 100000PF F 1608
C1278	1-131-992-11	s	CAP, CERAMIC 100000PF F 1608
C1279	1-131-992-11	s	CAP, CERAMIC 100000PF F 1608
C1280	1-131-992-11	s	CAP, CERAMIC 100000PF F 1608
C1281	1-131-992-11	s	CAP, CERAMIC 100000PF F 1608
C1282	1-131-992-11	s	CAP, CERAMIC 100000PF F 1608
C1283	1-131-992-11	s	CAP, CERAMIC 100000PF F 1608
C1284	1-131-992-11	s	CAP, CERAMIC 100000PF F 1608
C1285	1-131-992-11	s	CAP, CERAMIC 100000PF F 1608
C1286	1-131-992-11	s	CAP, CERAMIC 100000PF F 1608
C1287	1-131-992-11	s	CAP, CERAMIC 100000PF F 1608
C1288	1-131-992-11	s	CAP, CERAMIC 100000PF F 1608
C1289	1-131-992-11	s	CAP, CERAMIC 100000PF F 1608
C1290	1-131-992-11	s	CAP, CERAMIC 100000PF F 1608
C1291	1-131-992-11	s	CAP, CERAMIC 100000PF F 1608
C1292	1-131-992-11	s	CAP, CERAMIC 100000PF F 1608
C1293	1-131-992-11	s	CAP, CERAMIC 100000PF F 1608
C1294	1-131-992-11	s	CAP, CERAMIC 100000PF F 1608
C1295	1-131-992-11	s	CAP, CERAMIC 100000PF F 1608
C1296	1-131-992-11	s	CAP, CERAMIC 100000PF F 1608
C1297	1-131-992-11	s	CAP, CERAMIC 100000PF F 1608
C1298	1-131-992-11	s	CAP, CERAMIC 100000PF F 1608
C1299	1-131-992-11	s	CAP, CERAMIC 100000PF F 1608
C1300	1-131-992-11	s	CAP, CERAMIC 100000PF F 1608
C1301	1-131-992-11	s	CAP, CERAMIC 100000PF F 1608
C1302	1-131-992-11	s	CAP, CERAMIC 100000PF F 1608
C1303	1-164-227-11	s	CAPACITOR,CERAMIC 0.022MF/25V
C1304	1-164-227-11	s	CAPACITOR,CERAMIC 0.022MF/25V
C1305	1-162-927-11	s	CAPACITOR,CERAMIC 100PF/50V CH
C1306	1-131-992-11	s	CAP, CERAMIC 100000PF F 1608
C1307	1-131-992-11	s	CAP, CERAMIC 100000PF F 1608
C1308	1-131-992-11	s	CAP, CERAMIC 100000PF F 1608
C1309	1-162-927-11	s	CAPACITOR,CERAMIC 100PF/50V CH
C1310	1-162-927-11	s	CAPACITOR,CERAMIC 100PF/50V CH
C1311	1-164-380-11	s	CAPACITOR,CERAMIC 51PF CH (M-)
C1312 *2	deleted		
*1	1-162-922-11	s	CAPACITOR,CERAMIC 39PF/50V CH
C1313	1-128-590-11	s	CAPACITOR ELECT 100MF/6.3V(105
C1314	1-128-590-11	s	CAPACITOR ELECT 100MF/6.3V(105
C1315	1-162-968-11	s	CAPACITOR,CERAMIC 4700PF/50V B
C1316	1-131-992-11	s	CAP, CERAMIC 100000PF F 1608
C1319	1-131-992-11	s	CAP, CERAMIC 100000PF F 1608
C1320	1-131-992-11	s	CAP, CERAMIC 100000PF F 1608
C1321	1-131-992-11	s	CAP, CERAMIC 100000PF F 1608

(VPR-91 BOARD)

Ref. No. or Q'ty	Part No.	SP	Description
C1322	1-131-992-11	s	CAP, CERAMIC 100000PF F 1608
C1323	1-131-992-11	s	CAP, CERAMIC 100000PF F 1608
C1324	1-131-992-11	s	CAP, CERAMIC 100000PF F 1608
C1325	1-131-992-11	s	CAP, CERAMIC 100000PF F 1608
C1326	1-128-590-11	s	CAPACITOR ELECT 100MF/6.3V(105
C1400	1-131-992-11	s	CAP, CERAMIC 100000PF F 1608
C1401	1-131-992-11	s	CAP, CERAMIC 100000PF F 1608
C1402	1-131-992-11	s	CAP, CERAMIC 100000PF F 1608
C1403	1-131-992-11	s	CAP, CERAMIC 100000PF F 1608
C1404	1-131-992-11	s	CAP, CERAMIC 100000PF F 1608
C1405	1-131-992-11	s	CAP, CERAMIC 100000PF F 1608
C1406	1-131-992-11	s	CAP, CERAMIC 100000PF F 1608
C1407	1-131-992-11	s	CAP, CERAMIC 100000PF F 1608
C1408	1-131-992-11	s	CAP, CERAMIC 100000PF F 1608
C1410	1-131-992-11	s	CAP, CERAMIC 100000PF F 1608
C1411	1-131-992-11	s	CAP, CERAMIC 100000PF F 1608
C1412	1-131-992-11	s	CAP, CERAMIC 100000PF F 1608
C1413	1-162-919-11	s	CAPACITOR,CERAMIC 22PF/50V CH
C1416	1-162-919-11	s	CAPACITOR,CERAMIC 22PF/50V CH
C1417	1-162-919-11	s	CAPACITOR,CERAMIC 22PF/50V CH
C1418	1-162-970-11	s	CAPACITOR CERAMIC 0.01MF/25V B
C1420	1-162-970-11	s	CAPACITOR CERAMIC 0.01MF/25V B
C1421	1-162-970-11	s	CAPACITOR CERAMIC 0.01MF/25V B
C1422	1-162-970-11	s	CAPACITOR CERAMIC 0.01MF/25V B
C1423	1-131-992-11	s	CAP, CERAMIC 100000PF F 1608
C1424	1-162-919-11	s	CAPACITOR,CERAMIC 22PF/50V CH
C1426	1-162-919-11	s	CAPACITOR,CERAMIC 22PF/50V CH
C1427	1-162-919-11	s	CAPACITOR,CERAMIC 22PF/50V CH
C1428	1-162-919-11	s	CAPACITOR,CERAMIC 22PF/50V CH
C1429	1-162-919-11	s	CAPACITOR,CERAMIC 22PF/50V CH
C1431	1-162-919-11	s	CAPACITOR,CERAMIC 22PF/50V CH
C1432	1-162-919-11	s	CAPACITOR,CERAMIC 22PF/50V CH
C1433	1-162-919-11	s	CAPACITOR,CERAMIC 22PF/50V CH
C1434	1-131-992-11	s	CAP, CERAMIC 100000PF F 1608
C1435	1-131-992-11	s	CAP, CERAMIC 100000PF F 1608
C1436	1-131-992-11	s	CAP, CERAMIC 100000PF F 1608
C1437	1-131-992-11	s	CAP, CERAMIC 100000PF F 1608
C1438	1-162-919-11	s	CAPACITOR,CERAMIC 22PF/50V CH
C1439	1-162-919-11	s	CAPACITOR,CERAMIC 22PF/50V CH
C1440	1-162-919-11	s	CAPACITOR,CERAMIC 22PF/50V CH
C1441	1-162-970-11	s	CAPACITOR CERAMIC 0.01MF/25V B
C1442	1-131-992-11	s	CAP, CERAMIC 100000PF F 1608
C1443	1-131-992-11	s	CAP, CERAMIC 100000PF F 1608
C1444	1-131-992-11	s	CAP, CERAMIC 100000PF F 1608
C1445	1-131-992-11	s	CAP, CERAMIC 100000PF F 1608
C1446	1-131-992-11	s	CAP, CERAMIC 100000PF F 1608
C1447	1-131-992-11	s	CAP, CERAMIC 100000PF F 1608
C1448	1-131-992-11	s	CAP, CERAMIC 100000PF F 1608
C1449	1-131-992-11	s	CAP, CERAMIC 100000PF F 1608
C1450	1-127-692-11	s	CAP, CHIP CERAMIC 10MF B 3216
C1451	1-131-992-11	s	CAP, CERAMIC 100000PF F 1608
C1452	1-131-992-11	s	CAP, CERAMIC 100000PF F 1608
C1505	1-104-607-11	s	CAPACITOR ELECT 47MF/16V(105C)
C1507	1-131-992-11	s	CAP, CERAMIC 100000PF F 1608
C1508	1-128-590-11	s	CAPACITOR ELECT 100MF/6.3V(105
C1509	1-131-992-11	s	CAP, CERAMIC 100000PF F 1608
C1510	1-104-607-11	s	CAPACITOR ELECT 47MF/16V(105C)
C1511	1-131-992-11	s	CAP, CERAMIC 100000PF F 1608
C1534	1-131-992-11	s	CAP, CERAMIC 100000PF F 1608

(VPR-91 BOARD)

Ref. No. or Q'ty	Part No.	SP	Description	
C1535	1-131-992-11	s	CAP, CERAMIC 100000PF F 1608	
C1536	1-131-992-11	s	CAP, CERAMIC 100000PF F 1608	
C1538	1-131-992-11	s	CAP, CERAMIC 100000PF F 1608	
C1539	1-131-992-11	s	CAP, CERAMIC 100000PF F 1608	
C1540	1-164-230-11	s	CAPACITOR,CERAMIC 220PF/50V	
C1541	1-131-992-11	s	CAP, CERAMIC 100000PF F 1608	
C1542	1-131-992-11	s	CAP, CERAMIC 100000PF F 1608	
C1543	1-131-992-11	s	CAP, CERAMIC 100000PF F 1608	
C1544	1-131-992-11	s	CAP, CERAMIC 100000PF F 1608	
C1545	1-131-992-11	s	CAP, CERAMIC 100000PF F 1608	
C1548	1-128-451-11	s	CAPACITOR ELECT 22MF/16V(105C)	
C1549	1-131-992-11	s	CAP, CERAMIC 100000PF F 1608	
C1550	1-131-992-11	s	CAP, CERAMIC 100000PF F 1608	
C1552	1-131-992-11	s	CAP, CERAMIC 100000PF F 1608	
C1555	1-131-992-11	s	CAP, CERAMIC 100000PF F 1608	
C1556	1-131-992-11	s	CAP, CERAMIC 100000PF F 1608	
C1559	1-131-992-11	s	CAP, CERAMIC 100000PF F 1608	
C1560	1-131-992-11	s	CAP, CERAMIC 100000PF F 1608	
C1561	1-131-992-11	s	CAP, CERAMIC 100000PF F 1608	
C1563	1-131-992-11	s	CAP, CERAMIC 100000PF F 1608	
C1565	1-131-992-11	s	CAP, CERAMIC 100000PF F 1608	
C1568	1-131-992-11	s	CAP, CERAMIC 100000PF F 1608	
C1569	1-131-992-11	s	CAP, CERAMIC 100000PF F 1608	
C1570	1-115-416-11	s	CAPACITOR,CERAMIC 1000PF/25V	
C1571	1-115-416-11	s	CAPACITOR,CERAMIC 1000PF/25V	
C1572	1-131-992-11	s	CAP, CERAMIC 100000PF F 1608	
C1573	1-131-992-11	s	CAP, CERAMIC 100000PF F 1608	
C1575	1-128-590-11	s	CAPACITOR ELECT 100MF/6.3V(105	
C1577	1-131-992-11	s	CAP, CERAMIC 100000PF F 1608	
C1578	1-131-992-11	s	CAP, CERAMIC 100000PF F 1608	
C1579	1-162-919-11	s	CAPACITOR,CERAMIC 22PF/50V CH	
C1590	1-125-889-11	s	CAPACITOR, CERAMIC 2.2MF	
C1591	1-125-889-11	s	CAPACITOR, CERAMIC 2.2MF	
C1602	1-131-992-11	s	CAP, CERAMIC 100000PF F 1608	
C1606	1-131-992-11	s	CAP, CERAMIC 100000PF F 1608	
C1607	1-131-992-11	s	CAP, CERAMIC 100000PF F 1608	
C1612	1-131-992-11	s	CAP, CERAMIC 100000PF F 1608	
CN700	1-580-789-91	s	PIN, CONNECTOR 6P	
D100	8-719-820-41	s	DIODE 1SS302	
D102	8-719-975-40	s	DIODE RB411D	(RECTI)
D103	8-719-975-40	s	DIODE RB411D	(RECTI)
D104	8-719-016-95	s	DIODE 02DZ3.3-TPH3	
D303	8-719-820-41	s	DIODE 1SS302	
D304	8-719-975-40	s	DIODE RB411D	(RECTI)
D500	8-719-016-95	s	DIODE 02DZ3.3-TPH3	
D501	8-719-016-95	s	DIODE 02DZ3.3-TPH3	
D502	8-719-016-95	s	DIODE 02DZ3.3-TPH3	
D504	8-719-975-40	s	DIODE RB411D	(RECTI)
D700	8-719-975-40	s	DIODE RB411D	(RECTI)
D900	8-719-820-41	s	DIODE 1SS302	
D901	8-719-820-41	s	DIODE 1SS302	
D902	8-719-975-40	s	DIODE RB411D	(RECTI)
D903	8-719-820-41	s	DIODE 1SS302	
D904	8-719-975-40	s	DIODE RB411D	(RECTI)
D1100	8-719-975-40	s	DIODE RB411D	(RECTI)
D1101	8-719-820-41	s	DIODE 1SS302	
D1103	8-719-975-40	s	DIODE RB411D	(RECTI)
D1200	8-719-820-41	s	DIODE 1SS302	

(VPR-91 BOARD)

Ref. No. or Q'ty	Part No.	SP	Description	
D1201	8-719-820-41	s	DIODE 1SS302	
D1203	8-719-975-40	s	DIODE RB411D	(RECTI)
D1204	8-719-975-40	s	DIODE RB411D	(RECTI)
D1205	8-719-975-40	s	DIODE RB411D	(RECTI)
D1401	8-719-820-41	s	DIODE 1SS302	
E101	1-535-877-22	s	CHIP,CHECKER (TEST POINT)	
E300	1-535-877-22	s	CHIP,CHECKER (TEST POINT)	
E500	1-535-877-22	s	CHIP,CHECKER (TEST POINT)	
E700	1-535-877-22	s	CHIP,CHECKER (TEST POINT)	
E900	1-535-877-22	s	CHIP,CHECKER (TEST POINT)	
E1200	1-535-877-22	s	CHIP,CHECKER (TEST POINT)	
E1201	1-535-877-22	s	CHIP,CHECKER (TEST POINT)	
F1500	⚠ 1-533-627-21	s	FUSE CHIP 5A/125V (6125)	
F1501	⚠ 1-533-627-21	s	FUSE CHIP 5A/125V (6125)	
F1502	⚠ 1-533-627-21	s	FUSE CHIP 5A/125V (6125)	
FB1	1-469-094-11	s	FERRITE, EMI (SMD)	
FB300	1-469-094-11	s	FERRITE, EMI (SMD)	
FB301	1-469-094-11	s	FERRITE, EMI (SMD)	
FB1201	1-469-094-11	s	FERRITE, EMI (SMD)	
FB1204	1-469-094-11	s	FERRITE, EMI (SMD)	
FB1207	1-469-094-11	s	FERRITE, EMI (SMD)	
FL100	1-234-006-11	s	FILTER, LOW PASS	
FL500	1-234-006-11	s	FILTER, LOW PASS	
FL501	1-239-932-31	s	FILTER, LOW PASS (3MHZ)	
FL502	1-239-932-31	s	FILTER, LOW PASS (3MHZ)	
FL700	1-233-674-21	s	FILTER, EMI	
FL701	1-233-674-21	s	FILTER, EMI	
FL702	1-233-674-21	s	FILTER, EMI	
FL703	1-233-674-21	s	FILTER, EMI	
FL800	1-233-674-21	s	FILTER, EMI	
FL801	1-233-674-21	s	FILTER, EMI	
FL802	1-233-674-21	s	FILTER, EMI	
FL900	1-239-931-31	s	FILTER, LOW PASS (6MHZ)	
FL901	1-239-931-31	s	FILTER, LOW PASS (6MHZ)	
FL902	1-239-931-31	s	FILTER, LOW PASS (6MHZ)	
FL903	1-239-931-31	s	FILTER, LOW PASS (6MHZ)	
FL1400	1-233-674-21	s	FILTER, EMI	
FL1401	1-233-674-21	s	FILTER, EMI	
FL1402	1-233-674-21	s	FILTER, EMI	
FL1403	1-233-674-21	s	FILTER, EMI	
FL1404	1-233-674-21	s	FILTER, EMI	
FL1405	1-233-674-21	s	FILTER, EMI	
FL1406	1-239-898-22	s	FILTER, EMI (SMD)	
FL1407	1-239-898-22	s	FILTER, EMI (SMD)	
FL1408	1-239-898-22	s	FILTER, EMI (SMD)	
FL1409	1-239-898-22	s	FILTER, EMI (SMD)	
FL1410	1-239-898-22	s	FILTER, EMI (SMD)	
FL1411	1-239-898-22	s	FILTER, EMI (SMD)	
FL1412	1-239-898-22	s	FILTER, EMI (SMD)	
FL1413	1-239-898-22	s	FILTER, EMI (SMD)	
FL1414	1-233-674-21	s	FILTER, EMI	
FL1415	1-239-898-22	s	FILTER, EMI (SMD)	
IC100	8-759-533-85	s	IC L88M05T-FA-TL	
IC101	8-759-539-89	s	IC LM2990SX-5.0	
IC103	8-759-339-66	s	IC LT1122CS8-E1	
IC104	6-705-028-01	s	IC LMH6502MAX	
IC107	6-704-406-01	s	IC LM1881MX/NOPB	

(VPR-91 BOARD)

Ref. No. or Q'ty	Part No.	SP	Description
IC109	8-759-196-97	s	IC TC7SH32FU (TE85R)
IC110	8-752-068-24	s	IC CXA1450M-TH
IC112	8-759-702-08	s	IC NJM360M
IC113	8-759-183-53	s	IC TL431CPK-E2
IC114	8-759-183-53	s	IC TL431CPK-E2
IC115	8-759-669-74	s	IC TL084CPWR-12
IC116	8-759-669-73	s	IC TL082CPWR
IC117	8-759-524-18	s	IC TC74VHC163FT(EL)
IC118	6-704-161-01	s	IC S-80840CNUA-B8ZT2G
IC119	8-759-524-18	s	IC TC74VHC163FT(EL)
IC120	8-752-376-32	s	IC CXD2310AR
IC121	8-759-702-08	s	IC NJM360M
IC122	8-759-528-99	s	IC TC74VHC221AFT(EL)
IC126	8-759-669-74	s	IC TL084CPWR-12
IC129	8-759-523-97	s	IC TC74VHC123AFT(EL)
IC130	8-759-669-74	s	IC TL084CPWR-12
IC132	8-759-528-99	s	IC TC74VHC221AFT(EL)
IC134	6-700-915-01	s	IC SN74AHCT04PWR
IC139	8-759-082-61	s	IC TC4W53FU
IC140	8-759-082-61	s	IC TC4W53FU
IC141	8-759-082-61	s	IC TC4W53FU
IC142	8-759-082-61	s	IC TC4W53FU
IC143	8-759-196-97	s	IC TC7SH32FU (TE85R)
IC144	8-759-196-97	s	IC TC7SH32FU (TE85R)
IC145	8-759-669-73	s	IC TL082CPWR
IC146	8-759-523-95	s	IC TC74VHC74FT(EL)
IC147	8-759-528-99	s	IC TC74VHC221AFT(EL)
IC148	8-759-528-99	s	IC TC74VHC221AFT(EL)
IC149	8-759-523-97	s	IC TC74VHC123AFT(EL)
IC150	8-759-523-95	s	IC TC74VHC74FT(EL)
IC151	8-759-573-91	s	IC AD8055ARTZ-REEL7
IC152	6-702-436-01	s	IC AD8061ART-REEL7
IC153	8-752-068-24	s	IC CXA1450M-TH
IC154	6-702-436-01	s	IC AD8061ART-REEL7
IC301	8-759-549-15	s	IC SN74LV245APWR
IC302	8-752-334-55	s	IC CXD1175AM
IC303	8-759-196-97	s	IC TC7SH32FU (TE85R)
IC305	8-759-549-15	s	IC SN74LV245APWR
IC308	8-759-669-75	s	IC TLC2932IPWR
IC313	8-759-639-07	o	IC CXD9101R
IC316	6-700-915-01	s	IC SN74AHCT04PWR
IC317	6-701-541-01	s	IC TLC2272CPW (R)
IC319	8-759-392-77	s	IC SN74LVC245APW (E20)
IC320	8-759-669-74	s	IC TL084CPWR-12
IC321	8-759-564-49	s	IC TC7W53FU-TE12R
IC323	8-759-523-97	s	IC TC74VHC123AFT(EL)
IC324	8-759-523-95	s	IC TC74VHC74FT(EL)
IC325	8-759-196-97	s	IC TC7SH32FU (TE85R)
IC326	8-759-523-95	s	IC TC74VHC74FT(EL)
IC327	8-759-271-86	s	IC TC7SH04FU
IC328	6-700-399-01	s	IC UPC2925T-E1
IC502	6-704-406-01	s	IC LM1881MX/NOPB
IC503	8-759-528-99	s	IC TC74VHC221AFT(EL)
IC504	8-759-669-74	s	IC TL084CPWR-12
IC505	8-759-669-74	s	IC TL084CPWR-12
IC506	8-759-669-74	s	IC TL084CPWR-12
IC507	8-759-669-74	s	IC TL084CPWR-12
IC509	8-759-196-96	s	IC TC7SH08FU (TE85R)
IC510	8-759-196-96	s	IC TC7SH08FU (TE85R)

(VPR-91 BOARD)

Ref. No. or Q'ty	Part No.	SP	Description
IC511	8-759-669-74	s	IC TL084CPWR-12
IC513	8-759-523-78	s	IC TC74VHC00FT(EL)
IC514	8-759-082-60	s	IC TC7S66FU
IC515	8-759-669-73	s	IC TL082CPWR
IC516	8-759-082-60	s	IC TC7S66FU
IC517	8-759-082-60	s	IC TC7S66FU
IC518	8-759-702-08	s	IC NJM360M
IC519	8-759-702-08	s	IC NJM360M
IC520	8-759-183-53	s	IC TL431CPK-E2
IC521	8-759-549-15	s	IC SN74LV245APWR
IC522	8-759-183-53	s	IC TL431CPK-E2
IC523	8-752-376-32	s	IC CXD2310AR
IC524	8-759-524-52	s	IC TC74VHC574FT(EL)
IC525	8-759-523-95	s	IC TC74VHC74FT(EL)
IC526	8-759-533-85	s	IC L88M05T-FA-TL
IC702	8-759-549-01	s	IC SN74LV125APWR
IC703	8-759-524-52	s	IC TC74VHC574FT(EL)
IC704	8-759-524-52	s	IC TC74VHC574FT(EL)
IC705 *2	8-759-524-52	s	IC TC74VHC574FT(EL)
*1	6-802-600-03	s	IC XC18V02-VPR64-V209
IC707	8-759-639-85	s	IC SN65LVDS31DR
IC708	8-759-392-77	s	IC SN74LVC245APW (E20)
IC709	8-759-392-77	s	IC SN74LVC245APW (E20)
IC710	8-759-392-77	s	IC SN74LVC245APW (E20)
IC711	8-759-392-77	s	IC SN74LVC245APW (E20)
IC712	8-759-524-10	s	IC TC74VHC157FT (EL)
IC713	6-701-068-01	s	IC SI-3018LSA-TL
IC715 *2	6-704-718-01	s	IC XC18V02VQG44C
*1	6-802-600-03	s	IC XC18V02-VPR64-V209
IC716	8-759-524-27	s	IC TC74VHC244FT(EL)
IC717	8-759-271-86	s	IC TC7SH04FU
IC801	8-759-524-52	s	IC TC74VHC574FT(EL)
IC802	8-759-524-52	s	IC TC74VHC574FT(EL)
IC803	8-759-524-52	s	IC TC74VHC574FT(EL)
IC804	8-759-524-52	s	IC TC74VHC574FT(EL)
IC805	8-759-524-52	s	IC TC74VHC574FT(EL)
IC806 *2	6-705-983-01	s	IC IS42S32200B-6TL-TR
*1	6-702-238-11	s	IC HY57V643220CT-7TR
IC807 *2	6-705-983-01	s	IC IS42S32200B-6TL-TR
*1	6-702-238-11	s	IC HY57V643220CT-7TR
IC808 *2	6-705-983-01	s	IC IS42S32200B-6TL-TR
*1	6-702-238-11	s	IC HY57V643220CT-7TR
IC809	8-759-392-77	s	IC SN74LVC245APW (E20)
IC810	8-759-392-77	s	IC SN74LVC245APW (E20)
IC811	8-759-392-77	s	IC SN74LVC245APW (E20)
IC813 *2	6-705-983-01	s	IC IS42S32200B-6TL-TR
*1	6-702-238-11	s	IC HY57V643220CT-7TR
IC902	8-759-654-93	s	IC CXD9100AR
IC903	6-703-188-01	s	IC S-80827CNNB-B8MT2G
IC906	6-700-915-01	s	IC SN74AHCT04PWR
IC910	8-759-669-75	s	IC TLC2932IPWR
IC912	8-759-196-93	s	IC TC7SH00FU-TE85R
IC913	8-759-524-52	s	IC TC74VHC574FT(EL)
IC914	8-759-524-52	s	IC TC74VHC574FT(EL)
IC915	8-759-524-52	s	IC TC74VHC574FT(EL)
IC916	8-759-524-52	s	IC TC74VHC574FT(EL)
IC917	8-759-196-96	s	IC TC7SH08FU (TE85R)
IC918	8-759-082-60	s	IC TC7S66FU
IC919	8-759-669-73	s	IC TL082CPWR
IC920	8-752-357-63	s	IC CXD2308Q

(VPR-91 BOARD)

Ref. No. or Q'ty	Part No.	SP	Description
IC922	8-759-573-91	s	IC AD8055ARTZ-REEL7
IC923	8-759-573-91	s	IC AD8055ARTZ-REEL7
IC924	8-759-573-91	s	IC AD8055ARTZ-REEL7
IC925	8-759-573-91	s	IC AD8055ARTZ-REEL7
IC926	6-701-524-01	s	IC SN74LS221DBR
IC927	8-759-564-49	s	IC TC7W53FU-TE12R
IC928	8-759-564-49	s	IC TC7W53FU-TE12R
IC929	8-759-564-49	s	IC TC7W53FU-TE12R
IC930	8-759-564-49	s	IC TC7W53FU-TE12R
IC931	8-759-669-73	s	IC TL082CPWR
IC932	8-759-669-73	s	IC TL082CPWR
IC933	8-759-669-73	s	IC TL082CPWR
IC934	8-759-669-73	s	IC TL082CPWR
IC935	8-759-573-91	s	IC AD8055ARTZ-REEL7
IC936	8-752-068-24	s	IC CXA1450M-TH
IC937	8-759-573-91	s	IC AD8055ARTZ-REEL7
IC938	8-759-573-91	s	IC AD8055ARTZ-REEL7
IC939	8-759-573-91	s	IC AD8055ARTZ-REEL7
IC940	8-759-573-91	s	IC AD8055ARTZ-REEL7
IC941	8-759-573-91	s	IC AD8055ARTZ-REEL7
IC943	8-759-196-93	s	IC TC7SH00FU-TE85R
IC944	8-759-549-01	s	IC SN74LV125APWR
IC945	8-759-564-49	s	IC TC7W53FU-TE12R
IC947	8-759-564-49	s	IC TC7W53FU-TE12R
IC949	8-759-533-85	s	IC L88M05T-FA-TL
IC950	6-701-871-11	s	IC TK72150MCL-G
IC951	8-759-082-60	s	IC TC7S66FU
IC952	6-700-399-01	s	IC UPC2925T-E1
IC1100	8-759-533-85	s	IC L88M05T-FA-TL
IC1101	6-701-871-11	s	IC TK72150MCL-G
IC1103	6-704-406-01	s	IC LM1881MX/NOPB
IC1104	8-759-392-77	s	IC SN74LVC245APW (E20)
IC1105	8-759-702-08	s	IC NJM360M
IC1107	8-759-702-08	s	IC NJM360M
IC1113	8-759-528-99	s	IC TC74VHC221AFT(EL)
IC1114	8-759-669-73	s	IC TL082CPWR
IC1117	8-759-523-81	s	IC TC74VHC08FT(EL)
IC1118	8-759-524-09	s	IC TC74VHC153FT (EL)
IC1119	6-700-352-01	s	IC SN74CBTLV3253PWR
IC1120	8-759-833-99	s	IC MC74HC4052ADTR2
IC1121	8-759-392-77	s	IC SN74LVC245APW (E20)
IC1122	8-759-392-77	s	IC SN74LVC245APW (E20)
IC1123	8-759-549-15	s	IC SN74LV245APWR
IC1124	8-759-549-15	s	IC SN74LV245APWR
IC1125	8-759-549-15	s	IC SN74LV245APWR
IC1126	8-759-549-01	s	IC SN74LV125APWR
IC1127	8-759-549-15	s	IC SN74LV245APWR
IC1128	8-759-549-15	s	IC SN74LV245APWR
IC1129	8-759-271-86	s	IC TC7SH04FU
IC1130	8-759-639-86	s	IC SN65LVDS32DR
IC1131	8-759-271-86	s	IC TC7SH04FU
IC1132	8-759-271-86	s	IC TC7SH04FU
IC1134	6-700-268-01	s	IC SN74CBTLV3125PWR
IC1200	8-759-183-53	s	IC TL431CPK-E2
IC1201	8-759-669-75	s	IC TLC2932IPWR
IC1202	8-759-702-08	s	IC NJM360M
IC1204	8-759-702-08	s	IC NJM360M
IC1212	8-759-491-46	s	IC TC74VHCT04AFT (EL)
IC1214	8-759-669-74	s	IC TL084CPWR-12

(VPR-91 BOARD)

Ref. No. or Q'ty	Part No.	SP	Description
IC1216	6-701-524-01	s	IC SN74LS221DBR
IC1220	6-701-524-01	s	IC SN74LS221DBR
IC1221	8-759-669-74	s	IC TL084CPWR-12
IC1230	8-759-669-75	s	IC TLC2932IPWR
IC1231	8-759-564-49	s	IC TC7W53FU-TE12R
IC1232	8-759-392-77	s	IC SN74LVC245APW (E20)
IC1234	8-759-392-77	s	IC SN74LVC245APW (E20)
IC1235	8-759-082-60	s	IC TC7S66FU
IC1236	8-759-082-60	s	IC TC7S66FU
IC1237	8-759-523-02	s	IC TC74HC4053AFT(EL)
IC1238	8-759-564-49	s	IC TC7W53FU-TE12R
IC1239	8-759-271-86	s	IC TC7SH04FU
IC1240	6-701-524-01	s	IC SN74LS221DBR
IC1241	8-759-196-96	s	IC TC7SH08FU (TE85R)
IC1243	6-700-915-01	s	IC SN74AHCT04PWR
IC1244	8-759-669-74	s	IC TL084CPWR-12
IC1245	8-759-491-46	s	IC TC74VHCT04AFT (EL)
IC1247	8-759-523-95	s	IC TC74VHC74FT(EL)
IC1248	8-759-523-96	s	IC TC74VHC86FT (EL)
IC1249	8-759-523-95	s	IC TC74VHC74FT(EL)
IC1250	6-701-524-01	s	IC SN74LS221DBR
IC1251	8-759-453-97	s	IC TC7SET08FU-TE85R
IC1252	8-759-271-86	s	IC TC7SH04FU
IC1253	8-759-524-10	s	IC TC74VHC157FT (EL)
IC1256	8-752-375-98	s	IC CXD2315Q
IC1401	6-703-875-01	s	IC CDCVF2505PWR
IC1406	8-759-392-77	s	IC SN74LVC245APW (E20)
IC1407	8-759-524-18	s	IC TC74VHC163FT(EL)
IC1408	8-759-549-15	s	IC SN74LV245APWR
IC1409	8-759-392-77	s	IC SN74LVC245APW (E20)
IC1413	8-759-523-95	s	IC TC74VHC74FT(EL)
IC1417	8-759-523-95	s	IC TC74VHC74FT(EL)
IC1418	8-759-392-77	s	IC SN74LVC245APW (E20)
IC1419	8-759-392-77	s	IC SN74LVC245APW (E20)
IC1420	8-759-392-77	s	IC SN74LVC245APW (E20)
IC1421	8-759-392-77	s	IC SN74LVC245APW (E20)
IC1422	8-759-392-77	s	IC SN74LVC245APW (E20)
IC1423	8-759-392-77	s	IC SN74LVC245APW (E20)
IC1426	8-759-523-78	s	IC TC74VHC00FT(EL)
IC1427	8-759-523-78	s	IC TC74VHC00FT(EL)
IC1428	8-759-523-78	s	IC TC74VHC00FT(EL)
IC1429	8-759-491-46	s	IC TC74VHCT04AFT (EL)
IC1430	8-759-523-81	s	IC TC74VHC08FT(EL)
IC1431	8-759-523-94	s	IC TC74VHC32FT(EL)
IC1432	8-759-549-15	s	IC SN74LV245APWR
IC1433	8-759-549-15	s	IC SN74LV245APWR
IC1434	8-759-523-95	s	IC TC74VHC74FT(EL)
IC1505	8-759-524-07	s	IC TC74VHC138FT(EL)
IC1509	8-752-392-03	s	IC CXD1095BR
IC1510	8-759-524-07	s	IC TC74VHC138FT(EL)
IC1511	8-759-549-15	s	IC SN74LV245APWR
IC1512	8-759-468-72	s	IC AK6420AM (E2)
IC1513	8-759-183-53	s	IC TL431CPK-E2
IC1514	8-759-539-53	s	IC MB90096PF-G-139-BND(ER)
IC1522	8-759-491-46	s	IC TC74VHCT04AFT (EL)
IC1525	8-759-491-47	s	IC TC74VHCT08FT (EL)
IC1526	8-759-490-42	s	IC TC74VHCT574AFT(EL)
IC1527	8-759-523-81	s	IC TC74VHC08FT(EL)
IC1528	8-759-196-96	s	IC TC7SH08FU (TE85R)

(VPR-91 BOARD)

Ref. No. or Q'ty	Part No.	SP	Description
IC1529	8-759-271-86	s	IC TC7SH04FU
IC1530	8-759-491-46	s	IC TC74VHCT04AFT (EL)
IC1531	6-700-915-01	s	IC SN74AHCT04PWR
IC1532	8-759-549-15	s	IC SN74LV245APWR
IC1533	8-759-549-15	s	IC SN74LV245APWR
IC1534	8-759-549-15	s	IC SN74LV245APWR
IC1535	8-759-549-15	s	IC SN74LV245APWR
IC1536	8-759-578-68	s	IC SN74LVCC4245APWR
IC1537	8-759-578-68	s	IC SN74LVCC4245APWR
IC1538	8-759-523-94	s	IC TC74VHC32FT(EL)
IC1539	8-759-549-01	s	IC SN74LV125APWR
IC1540	8-759-536-93	s	IC M62371GP-600D
IC1541	8-759-523-81	s	IC TC74VHC08FT(EL)
IC1542	8-759-833-99	s	IC MC74HC4052ADTR2
IC1543	8-759-669-73	s	IC TL082CPWR
IC1544	8-759-523-94	s	IC TC74VHC32FT(EL)
IC1545	8-759-491-47	s	IC TC74VHCT08FT (EL)
IC1546	6-700-915-01	s	IC SN74AHCT04PWR
IC1547	6-700-915-01	s	IC SN74AHCT04PWR
IC1548	8-759-491-47	s	IC TC74VHCT08FT (EL)
L101	1-414-170-41	s	INDUCTOR, CHIP 100UH (2012)
L102	1-414-170-41	s	INDUCTOR, CHIP 100UH (2012)
L104	1-412-983-31	s	INDUCTOR, SMALL TYPE 2.2UH
L105	1-412-979-21	s	INDUCTOR (SMALL TYPE)
L106	1-412-976-41	s	INDUCTOR, SMALL TYPE 0.56UH
L107	1-412-976-41	s	INDUCTOR, SMALL TYPE 0.56UH
L500	1-412-995-31	s	INDUCTOR, SMALL TYPE 22.0UH
L700	1-414-398-11	s	INDUCTOR (SMD) 10UH
L900	1-414-398-11	s	INDUCTOR (SMD) 10UH
L903	1-414-398-11	s	INDUCTOR (SMD) 10UH
L904	1-414-398-11	s	INDUCTOR (SMD) 10UH
L905	1-414-398-11	s	INDUCTOR (SMD) 10UH
L906	1-414-398-11	s	INDUCTOR (SMD) 10UH
L907	1-412-970-11	s	INDUCTOR (SMALL TYPE)
L908	1-412-970-11	s	INDUCTOR (SMALL TYPE)
L909	1-414-524-31	s	INDUCTOR, SMALL TYPE 33.0UF
L910	1-414-524-31	s	INDUCTOR, SMALL TYPE 33.0UF
L911	1-414-195-31	s	INDUCTOR, CHIP 39UH
L912	1-414-195-31	s	INDUCTOR, CHIP 39UH
L913	1-414-524-31	s	INDUCTOR, SMALL TYPE 33.0UF
L914	1-414-398-11	s	INDUCTOR (SMD) 10UH
L1100	1-414-170-41	s	INDUCTOR, CHIP 100UH (2012)
L1101	1-412-993-11	s	INDUCTOR (SMALL TYPE)
L1102	1-414-195-31	s	INDUCTOR, CHIP 39UH
L1104	1-414-398-11	s	INDUCTOR (SMD) 10UH
L1200	1-414-398-11	s	INDUCTOR (SMD) 10UH
L1201	1-414-398-11	s	INDUCTOR (SMD) 10UH
L1202	1-414-398-11	s	INDUCTOR (SMD) 10UH
L1203	1-414-398-11	s	INDUCTOR (SMD) 10UH
L1204	1-414-398-11	s	INDUCTOR (SMD) 10UH
L1205	1-414-757-11	s	INDUCTOR 100.0UH
L1206	1-414-757-11	s	INDUCTOR 100.0UH
OSC1	*2 deleted		
	*1 1-781-806-21	s	LITHIUM TANTALATE OSCILLATOR
Q100	8-729-117-32	s	TRANSISTOR 2SC4177
Q101	8-729-013-37	s	TRANSISTOR 2SC4213-AB-TE85L
Q102	8-729-140-63	s	TRANSISTOR 2SA1611-M5M6
Q103	8-729-140-63	s	TRANSISTOR 2SA1611-M5M6

(VPR-91 BOARD)

Ref. No. or Q'ty	Part No.	SP	Description
Q104	8-729-143-07	s	TRANSISTOR 2SA1610-Y33
Q105	8-729-143-07	s	TRANSISTOR 2SA1610-Y33
Q106	8-729-117-32	s	TRANSISTOR 2SC4177
Q107	8-729-117-32	s	TRANSISTOR 2SC4177
Q108	8-729-140-63	s	TRANSISTOR 2SA1611-M5M6
Q109	8-729-053-44	s	TRANSISTOR 2SK880-Y-TE85R
Q110	8-729-140-63	s	TRANSISTOR 2SA1611-M5M6
Q111	8-729-140-63	s	TRANSISTOR 2SA1611-M5M6
Q112	8-729-928-81	s	TRANSISTOR DTC144EE
Q113	8-729-117-32	s	TRANSISTOR 2SC4177
Q114	8-729-117-32	s	TRANSISTOR 2SC4177
Q115	8-729-928-81	s	TRANSISTOR DTC144EE
Q116	8-729-013-37	s	TRANSISTOR 2SC4213-AB-TE85L
Q300	8-729-013-28	s	TRANSISTOR HN1B01FU-TE85R
Q301	8-729-140-63	s	TRANSISTOR 2SA1611-M5M6
Q302	8-729-140-63	s	TRANSISTOR 2SA1611-M5M6
Q303	8-729-928-81	s	TRANSISTOR DTC144EE
Q304	8-729-928-81	s	TRANSISTOR DTC144EE
Q500	8-729-140-63	s	TRANSISTOR 2SA1611-M5M6
Q501	8-729-928-27	s	TRANSISTOR DTA144EE
Q502	8-729-140-63	s	TRANSISTOR 2SA1611-M5M6
Q503	8-729-013-37	s	TRANSISTOR 2SC4213-AB-TE85L
Q504	8-729-013-37	s	TRANSISTOR 2SC4213-AB-TE85L
Q505	8-729-140-63	s	TRANSISTOR 2SA1611-M5M6
Q506	8-729-140-63	s	TRANSISTOR 2SA1611-M5M6
Q507	8-729-140-63	s	TRANSISTOR 2SA1611-M5M6
Q508	8-729-140-63	s	TRANSISTOR 2SA1611-M5M6
Q509	8-729-117-32	s	TRANSISTOR 2SC4177
Q510	8-729-117-32	s	TRANSISTOR 2SC4177
Q511	8-729-117-32	s	TRANSISTOR 2SC4177
Q512	8-729-143-07	s	TRANSISTOR 2SA1610-Y33
Q513	8-729-117-32	s	TRANSISTOR 2SC4177
Q514	8-729-117-32	s	TRANSISTOR 2SC4177
Q515	8-729-117-32	s	TRANSISTOR 2SC4177
Q516	8-729-117-32	s	TRANSISTOR 2SC4177
Q517	8-729-117-32	s	TRANSISTOR 2SC4177
Q518	8-729-117-32	s	TRANSISTOR 2SC4177
Q519	8-729-143-07	s	TRANSISTOR 2SA1610-Y33
Q520	8-729-140-63	s	TRANSISTOR 2SA1611-M5M6
Q521	8-729-140-63	s	TRANSISTOR 2SA1611-M5M6
Q522	8-729-140-63	s	TRANSISTOR 2SA1611-M5M6
Q523	8-729-117-32	s	TRANSISTOR 2SC4177
Q524	8-729-140-63	s	TRANSISTOR 2SA1611-M5M6
Q525	8-729-117-32	s	TRANSISTOR 2SC4177
Q526	8-729-140-63	s	TRANSISTOR 2SA1611-M5M6
Q527	8-729-117-32	s	TRANSISTOR 2SC4177
Q528	8-729-140-63	s	TRANSISTOR 2SA1611-M5M6
Q700	8-729-928-81	s	TRANSISTOR DTC144EE
Q900	8-729-117-32	s	TRANSISTOR 2SC4177
Q901	8-729-117-32	s	TRANSISTOR 2SC4177
Q902	8-729-928-81	s	TRANSISTOR DTC144EE
Q903	8-729-928-81	s	TRANSISTOR DTC144EE
Q904	8-729-140-63	s	TRANSISTOR 2SA1611-M5M6
Q905	8-729-140-63	s	TRANSISTOR 2SA1611-M5M6
Q906	8-729-013-37	s	TRANSISTOR 2SC4213-AB-TE85L
Q907	8-729-013-37	s	TRANSISTOR 2SC4213-AB-TE85L
Q908	8-729-013-37	s	TRANSISTOR 2SC4213-AB-TE85L
Q909	8-729-013-37	s	TRANSISTOR 2SC4213-AB-TE85L
Q1100	8-729-140-63	s	TRANSISTOR 2SA1611-M5M6

(VPR-91 BOARD)

Ref. No. or Q'ty	Part No.	SP	Description
Q1101	8-729-140-63	s	TRANSISTOR 2SA1611-M5M6
Q1102	8-729-143-07	s	TRANSISTOR 2SA1610-Y33
Q1103	8-729-143-07	s	TRANSISTOR 2SA1610-Y33
Q1104	8-729-117-32	s	TRANSISTOR 2SC4177
Q1105	8-729-117-32	s	TRANSISTOR 2SC4177
Q1107	8-729-928-81	s	TRANSISTOR DTC144EE
Q1200	8-729-140-63	s	TRANSISTOR 2SA1611-M5M6
Q1201	8-729-140-63	s	TRANSISTOR 2SA1611-M5M6
Q1204	8-729-117-32	s	TRANSISTOR 2SC4177
Q1205	8-729-117-32	s	TRANSISTOR 2SC4177
Q1206	8-729-140-63	s	TRANSISTOR 2SA1611-M5M6
Q1207	8-729-928-81	s	TRANSISTOR DTC144EE
Q1208	8-729-928-81	s	TRANSISTOR DTC144EE
Q1209	8-729-140-63	s	TRANSISTOR 2SA1611-M5M6
Q1210	8-729-140-63	s	TRANSISTOR 2SA1611-M5M6
Q1211	8-729-013-28	s	TRANSISTOR HN1B01FU-TE85R
Q1212	8-729-013-28	s	TRANSISTOR HN1B01FU-TE85R
Q1500	8-729-117-32	s	TRANSISTOR 2SC4177
Q1501	8-729-928-81	s	TRANSISTOR DTC144EE
Q1590	8-729-140-63	s	TRANSISTOR 2SA1611-M5M6
Q1591	8-729-045-53	s	TRANSISTOR SI4431DY-T1
R100	1-218-823-11	s	RESISTOR,CHIP 100 1/10W (1608)
R101	1-218-847-11	s	RESISTOR, CHIP 1K 1/10W (1608)
R102	1-218-859-11	s	RESISTOR,CHIP 3.3K 1/10W(1608)
R103	1-216-857-11	s	RESISTOR,CHIP 1M 1/10W(1608)
R104	1-218-823-11	s	RESISTOR,CHIP 100 1/10W (1608)
R105	1-216-857-11	s	RESISTOR,CHIP 1M 1/10W(1608)
R106	1-218-859-11	s	RESISTOR,CHIP 3.3K 1/10W(1608)
R107	1-218-845-11	s	RESISTOR,CHIP 820 1/10W (1608)
R110	1-218-827-11	s	RESISTOR,CHIP 150 1/10W (1608)
R111	1-218-863-11	s	RESISTOR,CHIP 4.7K 1/10W(1608)
R112	1-218-825-11	s	RESISTOR,CHIP 120 1/10W (1608)
R113	1-211-980-11	s	RESISTOR,CHIP 30 1/10W(1608)
R115	1-218-830-11	s	RESISTOR,CHIP 200 1/10W (1608)
R116	1-218-871-11	s	RESISTOR,CHIP 10K 1/10W (1608)
R117	1-218-847-11	s	RESISTOR, CHIP 1K 1/10W (1608)
R118	1-218-873-11	s	RESISTOR,CHIP 12K 1/10W (1608)
R119	1-218-839-11	s	RESISTOR,CHIP 470 1/10W (1608)
R120	1-218-847-11	s	RESISTOR, CHIP 1K 1/10W (1608)
R121	1-218-895-11	s	RESISTOR,CHIP 100K 1/10W(1608)
R122	1-218-895-11	s	RESISTOR,CHIP 100K 1/10W(1608)
R123	1-218-875-11	s	RESISTOR,CHIP 15K 1/10W (1608)
R124	1-218-893-11	s	RESISTOR, CHIP 82K 1/10W(1608)
R125	1-218-893-11	s	RESISTOR, CHIP 82K 1/10W(1608)
R126	1-218-857-11	s	RESISTOR,CHIP 2.7K 1/10W(1608)
R128	1-218-871-11	s	RESISTOR,CHIP 10K 1/10W (1608)
R130	1-211-985-11	s	RESISTOR,CHIP 47 1/10W (1608)
R131	1-218-857-11	s	RESISTOR,CHIP 2.7K 1/10W(1608)
R132	1-218-851-11	s	RESISTOR,CHIP 1.5K 1/10W(1608)
R133	1-218-867-11	s	RESISTOR,CHIP 6.8K 1/10W(1608)
R134	1-218-865-11	s	RESISTOR,CHIP 5.6K 1/10W(1608)
R135	1-218-847-11	s	RESISTOR, CHIP 1K 1/10W (1608)
R136	1-218-845-11	s	RESISTOR,CHIP 820 1/10W (1608)
R137	1-216-857-11	s	RESISTOR,CHIP 1M 1/10W(1608)
R138	1-218-863-11	s	RESISTOR,CHIP 4.7K 1/10W(1608)
R139	1-218-847-11	s	RESISTOR, CHIP 1K 1/10W (1608)
R140	1-218-915-11	s	RESISTOR,CHIP 680K 1/10W(1608)
R142	1-218-866-11	s	RESISTOR,CHIP 6.2K 1/10W(1608)

(VPR-91 BOARD)

Ref. No. or Q'ty	Part No.	SP	Description
R143	1-218-859-11	s	RESISTOR,CHIP 3.3K 1/10W(1608)
R144	1-218-871-11	s	RESISTOR,CHIP 10K 1/10W (1608)
R146	1-218-847-11	s	RESISTOR, CHIP 1K 1/10W (1608)
R147	1-218-887-11	s	RESISTOR,CHIP 47K 1/10W (1608)
R148	1-218-847-11	s	RESISTOR, CHIP 1K 1/10W (1608)
R149	1-218-853-11	s	RESISTOR,CHIP 1.8K 1/10W(1608)
R150	1-218-857-11	s	RESISTOR,CHIP 2.7K 1/10W(1608)
R151	1-218-863-11	s	RESISTOR,CHIP 4.7K 1/10W(1608)
R152	1-218-857-11	s	RESISTOR,CHIP 2.7K 1/10W(1608)
R153	1-218-863-11	s	RESISTOR,CHIP 4.7K 1/10W(1608)
R154	1-218-847-11	s	RESISTOR, CHIP 1K 1/10W (1608)
R155	1-218-887-11	s	RESISTOR,CHIP 47K 1/10W (1608)
R156	1-218-855-11	s	RESISTOR,CHIP 2.2K 1/10W(1608)
R157	1-218-871-11	s	RESISTOR,CHIP 10K 1/10W (1608)
R162	1-218-851-11	s	RESISTOR,CHIP 1.5K 1/10W(1608)
R163	1-218-855-11	s	RESISTOR,CHIP 2.2K 1/10W(1608)
R164	1-218-851-11	s	RESISTOR,CHIP 1.5K 1/10W(1608)
R165	1-218-871-11	s	RESISTOR,CHIP 10K 1/10W (1608)
R166	1-218-857-11	s	RESISTOR,CHIP 2.7K 1/10W(1608)
R167	1-218-446-11	s	RESISTOR,CHIP 1 (1608)
R168	1-218-446-11	s	RESISTOR,CHIP 1 (1608)
R169	1-216-857-11	s	RESISTOR,CHIP 1M 1/10W(1608)
R170	1-211-985-11	s	RESISTOR,CHIP 47 1/10W (1608)
R171	1-218-847-11	s	RESISTOR, CHIP 1K 1/10W (1608)
R172	1-218-847-11	s	RESISTOR, CHIP 1K 1/10W (1608)
R173	1-216-864-11	s	CONDUCTOR, CHIP (1608)
R174	1-218-863-11	s	RESISTOR,CHIP 4.7K 1/10W(1608)
R175	1-218-868-11	s	RESISTOR,CHIP 7.5K 1/10W(1608)
R176	1-218-871-11	s	RESISTOR,CHIP 10K 1/10W (1608)
R177	1-218-855-11	s	RESISTOR,CHIP 2.2K 1/10W(1608)
R178	1-218-863-11	s	RESISTOR,CHIP 4.7K 1/10W(1608)
R179	1-218-892-11	s	RESISTOR,CHIP 75K 1/10W (1608)
R180	1-218-883-11	s	RESISTOR,CHIP 33K 1/10W (1608)
R181	1-218-881-11	s	RESISTOR, CHIP 27K 1/10W(1608)
R182	1-218-837-11	s	RESISTOR,CHIP 390 1/10W (1608)
R183	1-218-877-11	s	RESISTOR,CHIP 18K 1/10W (1608)
R184	1-218-859-11	s	RESISTOR,CHIP 3.3K 1/10W(1608)
R185	1-218-446-11	s	RESISTOR,CHIP 1 (1608)
R186	1-218-446-11	s	RESISTOR,CHIP 1 (1608)
R194	1-218-871-11	s	RESISTOR,CHIP 10K 1/10W (1608)
R195	1-218-871-11	s	RESISTOR,CHIP 10K 1/10W (1608)
R196	1-218-871-11	s	RESISTOR,CHIP 10K 1/10W (1608)
R197	1-218-871-11	s	RESISTOR,CHIP 10K 1/10W (1608)
R198	1-218-859-11	s	RESISTOR,CHIP 3.3K 1/10W(1608)
R199	1-211-977-11	s	RESISTOR,CHIP 22 1/10W (1608)
R201	1-218-831-11	s	RESISTOR, CHIP 220 1/10W(1608)
R202	1-218-847-11	s	RESISTOR, CHIP 1K 1/10W (1608)
R203	1-218-851-11	s	RESISTOR,CHIP 1.5K 1/10W(1608)
R204	1-218-865-11	s	RESISTOR,CHIP 5.6K 1/10W(1608)
R207	1-218-867-11	s	RESISTOR,CHIP 6.8K 1/10W(1608)
R214	1-218-871-11	s	RESISTOR,CHIP 10K 1/10W (1608)
R215	1-218-869-11	s	RESISTOR,CHIP 8.2K 1/10W(1608)
R216	1-218-823-11	s	RESISTOR,CHIP 100 1/10W (1608)
R217	1-218-855-11	s	RESISTOR,CHIP 2.2K 1/10W(1608)
R218	1-218-831-11	s	RESISTOR, CHIP 220 1/10W(1608)
R219	1-218-858-11	s	RESISTOR, CHIP 3K 1/10W (1608)
R221	1-218-823-11	s	RESISTOR,CHIP 100 1/10W (1608)
R222	1-218-858-11	s	RESISTOR, CHIP 3K 1/10W (1608)
R223	1-218-844-11	s	RESISTOR,CHIP 750 1/10W (1608)

(VPR-91 BOARD)

Ref. No. or Q'ty	Part No.	SP	Description
R224	1-218-836-11	s	RESISTOR,CHIP 360 1/10W (1608)
R226	1-218-895-11	s	RESISTOR,CHIP 100K 1/10W(1608)
R227	1-218-859-11	s	RESISTOR,CHIP 3.3K 1/10W(1608)
R228	1-218-879-11	s	RESISTOR,CHIP 22K 1/10W (1608)
R229	1-218-895-11	s	RESISTOR,CHIP 100K 1/10W(1608)
R230	1-218-883-11	s	RESISTOR,CHIP 33K 1/10W (1608)
R231	1-218-876-11	s	RESISTOR,CHIP 16K 1/10W (1608)
R232	1-211-977-11	s	RESISTOR,CHIP 22 1/10W (1608)
R233	1-218-863-11	s	RESISTOR,CHIP 4.7K 1/10W(1608)
R234	1-211-985-11	s	RESISTOR,CHIP 47 1/10W (1608)
R235	1-218-871-11	s	RESISTOR,CHIP 10K 1/10W (1608)
R236	1-218-871-11	s	RESISTOR,CHIP 10K 1/10W (1608)
R237	1-211-985-11	s	RESISTOR,CHIP 47 1/10W (1608)
R238	1-211-977-11	s	RESISTOR,CHIP 22 1/10W (1608)
R239	1-218-871-11	s	RESISTOR,CHIP 10K 1/10W (1608)
R243	1-216-864-11	s	CONDUCTOR, CHIP (1608)
R244	1-216-864-11	s	CONDUCTOR, CHIP (1608)
R245	1-218-895-11	s	RESISTOR,CHIP 100K 1/10W(1608)
R246	1-211-985-11	s	RESISTOR,CHIP 47 1/10W (1608)
R249	1-218-871-11	s	RESISTOR,CHIP 10K 1/10W (1608)
R250	1-218-871-11	s	RESISTOR,CHIP 10K 1/10W (1608)
R251	1-218-823-11	s	RESISTOR,CHIP 100 1/10W (1608)
R252	1-216-864-11	s	CONDUCTOR, CHIP (1608)
R254	1-218-847-11	s	RESISTOR, CHIP 1K 1/10W (1608)
R255	1-218-847-11	s	RESISTOR, CHIP 1K 1/10W (1608)
R256	1-218-847-11	s	RESISTOR, CHIP 1K 1/10W (1608)
R258	1-216-864-11	s	CONDUCTOR, CHIP (1608)
R259	1-218-855-11	s	RESISTOR,CHIP 2.2K 1/10W(1608)
R260	1-218-847-11	s	RESISTOR, CHIP 1K 1/10W (1608)
R262	1-216-864-11	s	CONDUCTOR, CHIP (1608)
R311	1-216-864-11	s	CONDUCTOR, CHIP (1608)
R315	1-218-895-11	s	RESISTOR,CHIP 100K 1/10W(1608)
R317	1-216-864-11	s	CONDUCTOR, CHIP (1608)
R318	1-216-864-11	s	CONDUCTOR, CHIP (1608)
R333	1-218-883-11	s	RESISTOR,CHIP 33K 1/10W (1608)
R335	1-218-879-11	s	RESISTOR,CHIP 22K 1/10W (1608)
R336	1-218-858-11	s	RESISTOR, CHIP 3K 1/10W (1608)
R339	1-216-861-11	s	RESISTOR,CHIP 2.2M 1/16W 1608
R340	1-218-875-11	s	RESISTOR,CHIP 15K 1/10W (1608)
R343	1-218-847-11	s	RESISTOR, CHIP 1K 1/10W (1608)
R344	1-218-873-11	s	RESISTOR,CHIP 12K 1/10W (1608)
R345	1-218-871-11	s	RESISTOR,CHIP 10K 1/10W (1608)
R346	1-218-847-11	s	RESISTOR, CHIP 1K 1/10W (1608)
R347	1-218-847-11	s	RESISTOR, CHIP 1K 1/10W (1608)
R348	1-218-847-11	s	RESISTOR, CHIP 1K 1/10W (1608)
R349	1-218-847-11	s	RESISTOR, CHIP 1K 1/10W (1608)
R350	1-218-847-11	s	RESISTOR, CHIP 1K 1/10W (1608)
R351	1-218-879-11	s	RESISTOR,CHIP 22K 1/10W (1608)
R352	1-218-883-11	s	RESISTOR,CHIP 33K 1/10W (1608)
R353	1-218-887-11	s	RESISTOR,CHIP 47K 1/10W (1608)
R354	1-218-887-11	s	RESISTOR,CHIP 47K 1/10W (1608)
R355	1-218-884-11	s	RESISTOR,CHIP 36K 1/10W (1608)
R356	1-218-875-11	s	RESISTOR,CHIP 15K 1/10W (1608)
R357	1-218-895-11	s	RESISTOR,CHIP 100K 1/10W(1608)
R358	1-218-823-11	s	RESISTOR,CHIP 100 1/10W (1608)
R359	1-218-895-11	s	RESISTOR,CHIP 100K 1/10W(1608)
R360	1-218-823-11	s	RESISTOR,CHIP 100 1/10W (1608)
R365	1-218-827-11	s	RESISTOR,CHIP 150 1/10W (1608)
R366	1-218-843-11	s	RESISTOR,CHIP 680 1/10W (1608)

(VPR-91 BOARD)

Ref. No. or Q'ty	Part No.	SP	Description
R368	1-216-864-11	s	CONDUCTOR, CHIP (1608)
R377	1-216-864-11	s	CONDUCTOR, CHIP (1608)
R399	1-216-864-11	s	CONDUCTOR, CHIP (1608)
R407	1-218-855-11	s	RESISTOR,CHIP 2.2K 1/10W(1608)
R409	1-218-823-11	s	RESISTOR,CHIP 100 1/10W (1608)
R410	1-216-863-11	s	RESISTOR,CHIP 3.3M 1/16W 1608
R411	1-216-863-11	s	RESISTOR,CHIP 3.3M 1/16W 1608
R412	1-218-895-11	s	RESISTOR,CHIP 100K 1/10W(1608)
R414	1-218-855-11	s	RESISTOR,CHIP 2.2K 1/10W(1608)
R415	1-218-878-11	s	RESISTOR,CHIP 20K 1/10W (1608)
R416	1-218-878-11	s	RESISTOR,CHIP 20K 1/10W (1608)
R420	1-216-857-11	s	RESISTOR,CHIP 1M 1/10W(1608)
R421	1-218-855-11	s	RESISTOR,CHIP 2.2K 1/10W(1608)
R422	1-218-847-11	s	RESISTOR, CHIP 1K 1/10W (1608)
R423	1-218-823-11	s	RESISTOR,CHIP 100 1/10W (1608)
R427	1-216-864-11	s	CONDUCTOR, CHIP (1608)
R428	1-216-864-11	s	CONDUCTOR, CHIP (1608)
R429	1-216-864-11	s	CONDUCTOR, CHIP (1608)
R430	1-216-864-11	s	CONDUCTOR, CHIP (1608)
R431	1-216-864-11	s	CONDUCTOR, CHIP (1608)
R432	1-216-864-11	s	CONDUCTOR, CHIP (1608)
R433	1-216-864-11	s	CONDUCTOR, CHIP (1608)
R435	1-216-864-11	s	CONDUCTOR, CHIP (1608)
R439	1-216-864-11	s	CONDUCTOR, CHIP (1608)
R440	1-216-864-11	s	CONDUCTOR, CHIP (1608)
R441	1-216-864-11	s	CONDUCTOR, CHIP (1608)
R443	1-218-879-11	s	RESISTOR,CHIP 22K 1/10W (1608)
R444	1-218-873-11	s	RESISTOR,CHIP 12K 1/10W (1608)
R445	1-218-871-11	s	RESISTOR,CHIP 10K 1/10W (1608)
R446	1-218-871-11	s	RESISTOR,CHIP 10K 1/10W (1608)
R447	1-218-831-11	s	RESISTOR, CHIP 220 1/10W(1608)
R449	1-211-985-11	s	RESISTOR,CHIP 47 1/10W (1608)
R450	1-218-823-11	s	RESISTOR,CHIP 100 1/10W (1608)
R453	1-218-823-11	s	RESISTOR,CHIP 100 1/10W (1608)
R454	1-218-823-11	s	RESISTOR,CHIP 100 1/10W (1608)
R500	1-218-823-11	s	RESISTOR,CHIP 100 1/10W (1608)
R501	1-218-863-11	s	RESISTOR,CHIP 4.7K 1/10W(1608)
R502	1-218-835-11	s	RESISTOR,CHIP 330 1/10W (1608)
R504	1-218-887-11	s	RESISTOR,CHIP 47K 1/10W (1608)
R505	1-211-990-11	s	RESISTOR,CHIP 75 1/10W (1608)
R506	1-211-990-11	s	RESISTOR,CHIP 75 1/10W (1608)
R507	1-211-990-11	s	RESISTOR,CHIP 75 1/10W (1608)
R508	1-218-849-11	s	RESISTOR,CHIP 1.2K 1/10W(1608)
R509	1-218-845-11	s	RESISTOR,CHIP 820 1/10W (1608)
R510	1-218-836-11	s	RESISTOR,CHIP 360 1/10W (1608)
R511	1-218-863-11	s	RESISTOR,CHIP 4.7K 1/10W(1608)
R512	1-218-836-11	s	RESISTOR,CHIP 360 1/10W (1608)
R513	1-218-863-11	s	RESISTOR,CHIP 4.7K 1/10W(1608)
R514	1-218-879-11	s	RESISTOR,CHIP 22K 1/10W (1608)
R515	1-218-846-11	s	RESISTOR,CHIP 910 1/10W (1608)
R516	1-218-846-11	s	RESISTOR,CHIP 910 1/10W (1608)
R517	1-218-847-11	s	RESISTOR, CHIP 1K 1/10W (1608)
R518	1-218-446-11	s	RESISTOR,CHIP 1 (1608)
R519	1-218-446-11	s	RESISTOR,CHIP 1 (1608)
R521	1-218-847-11	s	RESISTOR, CHIP 1K 1/10W (1608)
R522	1-218-835-11	s	RESISTOR,CHIP 330 1/10W (1608)
R523	1-218-839-11	s	RESISTOR,CHIP 470 1/10W (1608)
R524	1-218-839-11	s	RESISTOR,CHIP 470 1/10W (1608)
R525	1-218-871-11	s	RESISTOR,CHIP 10K 1/10W (1608)

(VPR-91 BOARD)

Ref. No. or Q'ty	Part No.	SP	Description
R527	1-218-887-11	s	RESISTOR,CHIP 47K 1/10W (1608)
R528	1-218-887-11	s	RESISTOR,CHIP 47K 1/10W (1608)
R529	1-218-827-11	s	RESISTOR,CHIP 150 1/10W (1608)
R530	1-218-839-11	s	RESISTOR,CHIP 470 1/10W (1608)
R531	1-218-839-11	s	RESISTOR,CHIP 470 1/10W (1608)
R532	1-218-857-11	s	RESISTOR,CHIP 2.7K 1/10W(1608)
R533	1-218-827-11	s	RESISTOR,CHIP 150 1/10W (1608)
R534	1-218-839-11	s	RESISTOR,CHIP 470 1/10W (1608)
R535	1-218-839-11	s	RESISTOR,CHIP 470 1/10W (1608)
R536	1-218-863-11	s	RESISTOR,CHIP 4.7K 1/10W(1608)
R537	1-218-847-11	s	RESISTOR, CHIP 1K 1/10W (1608)
R538	1-218-851-11	s	RESISTOR,CHIP 1.5K 1/10W(1608)
R539	1-218-851-11	s	RESISTOR,CHIP 1.5K 1/10W(1608)
R540	1-211-969-11	s	RESISTOR,CHIP 10 1/10W (1608)
R541	1-211-969-11	s	RESISTOR,CHIP 10 1/10W (1608)
R542	1-211-969-11	s	RESISTOR,CHIP 10 1/10W (1608)
R543	1-218-825-11	s	RESISTOR,CHIP 120 1/10W (1608)
R544	1-218-831-11	s	RESISTOR, CHIP 220 1/10W(1608)
R545	1-218-831-11	s	RESISTOR, CHIP 220 1/10W(1608)
R546	1-218-855-11	s	RESISTOR,CHIP 2.2K 1/10W(1608)
R547	1-218-871-11	s	RESISTOR,CHIP 10K 1/10W (1608)
R548	1-216-863-11	s	RESISTOR,CHIP 3.3M 1/16W 1608
R550	1-216-863-11	s	RESISTOR,CHIP 3.3M 1/16W 1608
R551	1-218-849-11	s	RESISTOR,CHIP 1.2K 1/10W(1608)
R552	1-218-831-11	s	RESISTOR, CHIP 220 1/10W(1608)
R553	1-218-851-11	s	RESISTOR,CHIP 1.5K 1/10W(1608)
R554	1-218-831-11	s	RESISTOR, CHIP 220 1/10W(1608)
R555	1-218-851-11	s	RESISTOR,CHIP 1.5K 1/10W(1608)
R556	1-218-831-11	s	RESISTOR, CHIP 220 1/10W(1608)
R557	1-218-823-11	s	RESISTOR,CHIP 100 1/10W (1608)
R558	1-218-823-11	s	RESISTOR,CHIP 100 1/10W (1608)
R559	1-218-823-11	s	RESISTOR,CHIP 100 1/10W (1608)
R560	1-218-863-11	s	RESISTOR,CHIP 4.7K 1/10W(1608)
R561	1-218-863-11	s	RESISTOR,CHIP 4.7K 1/10W(1608)
R562	1-218-863-11	s	RESISTOR,CHIP 4.7K 1/10W(1608)
R564	1-218-855-11	s	RESISTOR,CHIP 2.2K 1/10W(1608)
R565	1-218-847-11	s	RESISTOR, CHIP 1K 1/10W (1608)
R566	1-218-847-11	s	RESISTOR, CHIP 1K 1/10W (1608)
R567	1-218-847-11	s	RESISTOR, CHIP 1K 1/10W (1608)
R568	1-218-871-11	s	RESISTOR,CHIP 10K 1/10W (1608)
R569	1-216-857-11	s	RESISTOR,CHIP 1M 1/10W(1608)
R570	1-218-863-11	s	RESISTOR,CHIP 4.7K 1/10W(1608)
R571	1-218-847-11	s	RESISTOR, CHIP 1K 1/10W (1608)
R572	1-218-847-11	s	RESISTOR, CHIP 1K 1/10W (1608)
R573	1-218-857-11	s	RESISTOR,CHIP 2.7K 1/10W(1608)
R574	1-218-871-11	s	RESISTOR,CHIP 10K 1/10W (1608)
R575	1-218-839-11	s	RESISTOR,CHIP 470 1/10W (1608)
R576	1-218-863-11	s	RESISTOR,CHIP 4.7K 1/10W(1608)
R577	1-218-859-11	s	RESISTOR,CHIP 3.3K 1/10W(1608)
R578	1-218-863-11	s	RESISTOR,CHIP 4.7K 1/10W(1608)
R579	1-218-859-11	s	RESISTOR,CHIP 3.3K 1/10W(1608)
R580	1-216-857-11	s	RESISTOR,CHIP 1M 1/10W(1608)
R581	1-216-857-11	s	RESISTOR,CHIP 1M 1/10W(1608)
R582	1-216-857-11	s	RESISTOR,CHIP 1M 1/10W(1608)
R583	1-218-871-11	s	RESISTOR,CHIP 10K 1/10W (1608)
R584	1-218-871-11	s	RESISTOR,CHIP 10K 1/10W (1608)
R585	1-218-871-11	s	RESISTOR,CHIP 10K 1/10W (1608)
R586	1-218-839-11	s	RESISTOR,CHIP 470 1/10W (1608)
R587	1-218-843-11	s	RESISTOR,CHIP 680 1/10W (1608)

(VPR-91 BOARD)

Ref. No. or Q'ty	Part No.	SP	Description
R588	1-218-839-11	s	RESISTOR,CHIP 470 1/10W (1608)
R589	1-218-839-11	s	RESISTOR,CHIP 470 1/10W (1608)
R590	1-218-839-11	s	RESISTOR,CHIP 470 1/10W (1608)
R591	1-211-985-11	s	RESISTOR,CHIP 47 1/10W (1608)
R592	1-211-985-11	s	RESISTOR,CHIP 47 1/10W (1608)
R593	1-211-985-11	s	RESISTOR,CHIP 47 1/10W (1608)
R594	1-218-446-11	s	RESISTOR,CHIP 1 (1608)
R595	1-218-446-11	s	RESISTOR,CHIP 1 (1608)
R596	1-218-839-11	s	RESISTOR,CHIP 470 1/10W (1608)
R597	1-211-985-11	s	RESISTOR,CHIP 47 1/10W (1608)
R598	1-218-879-11	s	RESISTOR,CHIP 22K 1/10W (1608)
R599	1-218-847-11	s	RESISTOR, CHIP 1K 1/10W (1608)
R600	1-218-847-11	s	RESISTOR, CHIP 1K 1/10W (1608)
R601	1-216-864-11	s	CONDUCTOR, CHIP (1608)
R602	1-218-871-11	s	RESISTOR,CHIP 10K 1/10W (1608)
R603	1-218-855-11	s	RESISTOR,CHIP 2.2K 1/10W(1608)
R604	1-218-907-11	s	RESISTOR,CHIP 330K 1/10W(1608)
R605	1-218-892-11	s	RESISTOR,CHIP 75K 1/10W (1608)
R606	1-218-892-11	s	RESISTOR,CHIP 75K 1/10W (1608)
R607	1-218-907-11	s	RESISTOR,CHIP 330K 1/10W(1608)
R608	1-218-883-11	s	RESISTOR,CHIP 33K 1/10W (1608)
R609	1-218-873-11	s	RESISTOR,CHIP 12K 1/10W (1608)
R610	1-218-839-11	s	RESISTOR,CHIP 470 1/10W (1608)
R611	1-218-839-11	s	RESISTOR,CHIP 470 1/10W (1608)
R612	1-218-839-11	s	RESISTOR,CHIP 470 1/10W (1608)
R613	1-218-839-11	s	RESISTOR,CHIP 470 1/10W (1608)
R614	1-218-871-11	s	RESISTOR,CHIP 10K 1/10W (1608)
R615	1-218-871-11	s	RESISTOR,CHIP 10K 1/10W (1608)
R616	1-218-871-11	s	RESISTOR,CHIP 10K 1/10W (1608)
R617	1-218-871-11	s	RESISTOR,CHIP 10K 1/10W (1608)
R618	1-218-831-11	s	RESISTOR, CHIP 220 1/10W(1608)
R620	1-218-831-11	s	RESISTOR, CHIP 220 1/10W(1608)
R621	1-218-831-11	s	RESISTOR, CHIP 220 1/10W(1608)
R623	1-218-831-11	s	RESISTOR, CHIP 220 1/10W(1608)
R624	1-216-864-11	s	CONDUCTOR, CHIP (1608)
R625	1-216-864-11	s	CONDUCTOR, CHIP (1608)
R626	1-218-871-11	s	RESISTOR,CHIP 10K 1/10W (1608)
R627	1-218-839-11	s	RESISTOR,CHIP 470 1/10W (1608)
R628	1-218-871-11	s	RESISTOR,CHIP 10K 1/10W (1608)
R629	1-218-839-11	s	RESISTOR,CHIP 470 1/10W (1608)
R630	1-218-823-11	s	RESISTOR,CHIP 100 1/10W (1608)
R631	1-218-823-11	s	RESISTOR,CHIP 100 1/10W (1608)
R632	1-218-861-11	s	RESISTOR,CHIP 3.9K 1/10W(1608)
R633	1-218-871-11	s	RESISTOR,CHIP 10K 1/10W (1608)
R634	1-218-891-11	s	RESISTOR,CHIP 68K 1/10W (1608)
R635	1-218-855-11	s	RESISTOR,CHIP 2.2K 1/10W(1608)
R636	1-218-882-11	s	RESISTOR, CHIP 30K 1/10W(1608)
R637	1-218-879-11	s	RESISTOR,CHIP 22K 1/10W (1608)
R638	1-218-873-11	s	RESISTOR,CHIP 12K 1/10W (1608)
R639	1-218-871-11	s	RESISTOR,CHIP 10K 1/10W (1608)
R640	1-218-871-11	s	RESISTOR,CHIP 10K 1/10W (1608)
R641	1-218-831-11	s	RESISTOR, CHIP 220 1/10W(1608)
R643	1-218-831-11	s	RESISTOR, CHIP 220 1/10W(1608)
R644	1-211-991-11	s	RESISTOR,CHIP 82 1/10W (1608)
R645	1-218-823-11	s	RESISTOR,CHIP 100 1/10W (1608)
R646	1-218-823-11	s	RESISTOR,CHIP 100 1/10W (1608)
R651	1-218-446-11	s	RESISTOR,CHIP 1 (1608)
R652	1-218-446-11	s	RESISTOR,CHIP 1 (1608)
R654	1-218-446-11	s	RESISTOR,CHIP 1 (1608)

(VPR-91 BOARD)

Ref. No. or Q'ty	Part No.	SP	Description
R655	1-218-446-11	s	RESISTOR,CHIP 1 (1608)
R656	1-218-446-11	s	RESISTOR,CHIP 1 (1608)
R657	1-218-446-11	s	RESISTOR,CHIP 1 (1608)
R658	1-218-446-11	s	RESISTOR,CHIP 1 (1608)
R659	1-218-446-11	s	RESISTOR,CHIP 1 (1608)
R700	1-218-831-11	s	RESISTOR, CHIP 220 1/10W(1608)
R701	1-218-823-11	s	RESISTOR,CHIP 100 1/10W (1608)
R703	1-218-871-11	s	RESISTOR,CHIP 10K 1/10W (1608)
R706	1-218-895-11	s	RESISTOR,CHIP 100K 1/10W(1608)
R708	1-218-823-11	s	RESISTOR,CHIP 100 1/10W (1608)
R711	1-218-895-11	s	RESISTOR,CHIP 100K 1/10W(1608)
R712	1-218-895-11	s	RESISTOR,CHIP 100K 1/10W(1608)
R713	1-218-895-11	s	RESISTOR,CHIP 100K 1/10W(1608)
R727	1-218-871-11	s	RESISTOR,CHIP 10K 1/10W (1608)
R729	1-216-864-11	s	CONDUCTOR, CHIP (1608)
R733	1-218-863-11	s	RESISTOR,CHIP 4.7K 1/10W(1608)
R734	1-218-835-11	s	RESISTOR,CHIP 330 1/10W (1608)
R735	1-218-863-11	s	RESISTOR,CHIP 4.7K 1/10W(1608)
R736	1-218-863-11	s	RESISTOR,CHIP 4.7K 1/10W(1608)
R741	1-218-823-11	s	RESISTOR,CHIP 100 1/10W (1608)
R742	1-218-823-11	s	RESISTOR,CHIP 100 1/10W (1608)
R743	1-216-864-11	s	CONDUCTOR, CHIP (1608)
R752	1-216-864-11	s	CONDUCTOR, CHIP (1608)
R753	1-211-985-11	s	RESISTOR,CHIP 47 1/10W (1608)
R754	1-211-985-11	s	RESISTOR,CHIP 47 1/10W (1608)
R755	1-211-985-11	s	RESISTOR,CHIP 47 1/10W (1608)
R756	1-218-847-11	s	RESISTOR, CHIP 1K 1/10W (1608)
R800	1-218-871-11	s	RESISTOR,CHIP 10K 1/10W (1608)
R801	1-218-871-11	s	RESISTOR,CHIP 10K 1/10W (1608)
R802	1-218-834-11	s	RESISTOR,CHIP 300 1/10W (1608)
R803	1-218-871-11	s	RESISTOR,CHIP 10K 1/10W (1608)
R804	1-218-871-11	s	RESISTOR,CHIP 10K 1/10W (1608)
R805	1-218-871-11	s	RESISTOR,CHIP 10K 1/10W (1608)
R806	1-211-985-11	s	RESISTOR,CHIP 47 1/10W (1608)
R807	1-218-831-11	s	RESISTOR, CHIP 220 1/10W(1608)
R908	1-218-878-11	s	RESISTOR,CHIP 20K 1/10W (1608)
R909	1-218-876-11	s	RESISTOR,CHIP 16K 1/10W (1608)
R910	1-218-878-11	s	RESISTOR,CHIP 20K 1/10W (1608)
R911	1-218-876-11	s	RESISTOR,CHIP 16K 1/10W (1608)
R912	1-218-887-11	s	RESISTOR,CHIP 47K 1/10W (1608)
R913	1-218-878-11	s	RESISTOR,CHIP 20K 1/10W (1608)
R914	1-218-876-11	s	RESISTOR,CHIP 16K 1/10W (1608)
R915	1-218-895-11	s	RESISTOR,CHIP 100K 1/10W(1608)
R916	1-216-864-11	s	CONDUCTOR, CHIP (1608)
R921	1-216-864-11	s	CONDUCTOR, CHIP (1608)
R924	1-218-823-11	s	RESISTOR,CHIP 100 1/10W (1608)
R925	1-218-823-11	s	RESISTOR,CHIP 100 1/10W (1608)
R926	1-218-823-11	s	RESISTOR,CHIP 100 1/10W (1608)
R927	1-218-823-11	s	RESISTOR,CHIP 100 1/10W (1608)
R932	1-218-857-11	s	RESISTOR,CHIP 2.7K 1/10W(1608)
R933	1-218-857-11	s	RESISTOR,CHIP 2.7K 1/10W(1608)
R934	1-218-857-11	s	RESISTOR,CHIP 2.7K 1/10W(1608)
R935	1-218-823-11	s	RESISTOR,CHIP 100 1/10W (1608)
R938	1-216-864-11	s	CONDUCTOR, CHIP (1608)
R939	1-216-864-11	s	CONDUCTOR, CHIP (1608)
R953	1-218-871-11	s	RESISTOR,CHIP 10K 1/10W (1608)
R954	1-218-871-11	s	RESISTOR,CHIP 10K 1/10W (1608)
R955	1-218-911-11	s	RESISTOR,CHIP 470K 1/10W(1608)
R956	1-218-863-11	s	RESISTOR,CHIP 4.7K 1/10W(1608)

(VPR-91 BOARD)

Ref. No. or Q'ty	Part No.	SP	Description
R957	1-211-977-11	s	RESISTOR,CHIP 22 1/10W (1608)
R960	1-218-871-11	s	RESISTOR,CHIP 10K 1/10W (1608)
R961	1-218-849-11	s	RESISTOR,CHIP 1.2K 1/10W(1608)
R962	1-218-883-11	s	RESISTOR,CHIP 33K 1/10W (1608)
R963	1-218-875-11	s	RESISTOR,CHIP 15K 1/10W (1608)
R964	1-218-876-11	s	RESISTOR,CHIP 16K 1/10W (1608)
R965	1-216-857-11	s	RESISTOR,CHIP 1M 1/10W(1608)
R966	1-218-883-11	s	RESISTOR,CHIP 33K 1/10W (1608)
R967	1-218-875-11	s	RESISTOR,CHIP 15K 1/10W (1608)
R968	1-218-876-11	s	RESISTOR,CHIP 16K 1/10W (1608)
R969	1-218-892-11	s	RESISTOR,CHIP 75K 1/10W (1608)
R970	1-218-875-11	s	RESISTOR,CHIP 15K 1/10W (1608)
R971	1-218-874-11	s	RESISTOR,CHIP 13K 1/10W (1608)
R972	1-218-823-11	s	RESISTOR,CHIP 100 1/10W (1608)
R973	1-218-823-11	s	RESISTOR,CHIP 100 1/10W (1608)
R974	1-218-823-11	s	RESISTOR,CHIP 100 1/10W (1608)
R975	1-218-853-11	s	RESISTOR,CHIP 1.8K 1/10W(1608)
R976	1-218-853-11	s	RESISTOR,CHIP 1.8K 1/10W(1608)
R977	1-218-849-11	s	RESISTOR,CHIP 1.2K 1/10W(1608)
R979	1-218-835-11	s	RESISTOR,CHIP 330 1/10W (1608)
R980	1-218-863-11	s	RESISTOR,CHIP 4.7K 1/10W(1608)
R981	1-218-823-11	s	RESISTOR,CHIP 100 1/10W (1608)
R982	1-218-827-11	s	RESISTOR,CHIP 150 1/10W (1608)
R983	1-218-827-11	s	RESISTOR,CHIP 150 1/10W (1608)
R984	1-218-827-11	s	RESISTOR,CHIP 150 1/10W (1608)
R985	1-218-827-11	s	RESISTOR,CHIP 150 1/10W (1608)
R986	1-218-827-11	s	RESISTOR,CHIP 150 1/10W (1608)
R987	1-218-827-11	s	RESISTOR,CHIP 150 1/10W (1608)
R988	1-218-827-11	s	RESISTOR,CHIP 150 1/10W (1608)
R989	1-218-827-11	s	RESISTOR,CHIP 150 1/10W (1608)
R990	1-211-975-11	s	RESISTOR,CHIP 18 1/10W (1608)
R991	1-211-991-11	s	RESISTOR,CHIP 82 1/10W (1608)
R992	1-211-973-11	s	RESISTOR,CHIP 15 1/10W (1608)
R993	1-211-973-11	s	RESISTOR,CHIP 15 1/10W (1608)
R994	1-211-975-11	s	RESISTOR,CHIP 18 1/10W (1608)
R995	1-211-991-11	s	RESISTOR,CHIP 82 1/10W (1608)
R996	1-218-853-11	s	RESISTOR,CHIP 1.8K 1/10W(1608)
R997	1-218-850-11	s	RESISTOR,CHIP 1.3K 1/10W(1608)
R998	1-218-850-11	s	RESISTOR,CHIP 1.3K 1/10W(1608)
R999	1-218-853-11	s	RESISTOR,CHIP 1.8K 1/10W(1608)
R1000	1-218-827-11	s	RESISTOR,CHIP 150 1/10W (1608)
R1001	1-218-827-11	s	RESISTOR,CHIP 150 1/10W (1608)
R1002	1-218-827-11	s	RESISTOR,CHIP 150 1/10W (1608)
R1003	1-218-827-11	s	RESISTOR,CHIP 150 1/10W (1608)
R1004	1-218-827-11	s	RESISTOR,CHIP 150 1/10W (1608)
R1005	1-218-827-11	s	RESISTOR,CHIP 150 1/10W (1608)
R1006	1-218-827-11	s	RESISTOR,CHIP 150 1/10W (1608)
R1007	1-218-827-11	s	RESISTOR,CHIP 150 1/10W (1608)
R1008	1-218-863-11	s	RESISTOR,CHIP 4.7K 1/10W(1608)
R1009	1-218-871-11	s	RESISTOR,CHIP 10K 1/10W (1608)
R1010	1-218-863-11	s	RESISTOR,CHIP 4.7K 1/10W(1608)
R1011	1-218-885-11	s	RESISTOR,CHIP 39K 1/10W (1608)
R1012	1-218-863-11	s	RESISTOR,CHIP 4.7K 1/10W(1608)
R1013	1-218-885-11	s	RESISTOR,CHIP 39K 1/10W (1608)
R1014	1-218-863-11	s	RESISTOR,CHIP 4.7K 1/10W(1608)
R1015	1-218-871-11	s	RESISTOR,CHIP 10K 1/10W (1608)
R1016	1-218-858-11	s	RESISTOR, CHIP 3K 1/10W (1608)
R1017	1-218-858-11	s	RESISTOR, CHIP 3K 1/10W (1608)
R1018	1-218-858-11	s	RESISTOR, CHIP 3K 1/10W (1608)

(VPR-91 BOARD)

Ref. No. or Q'ty	Part No.	SP	Description
R1019	1-218-849-11	s	RESISTOR,CHIP 1.2K 1/10W(1608)
R1020	1-218-849-11	s	RESISTOR,CHIP 1.2K 1/10W(1608)
R1021	1-218-849-11	s	RESISTOR,CHIP 1.2K 1/10W(1608)
R1022	1-218-849-11	s	RESISTOR,CHIP 1.2K 1/10W(1608)
R1023	1-218-855-11	s	RESISTOR,CHIP 2.2K 1/10W(1608)
R1024	1-216-863-11	s	RESISTOR,CHIP 3.3M 1/16W 1608
R1025	1-216-863-11	s	RESISTOR,CHIP 3.3M 1/16W 1608
R1026	1-216-863-11	s	RESISTOR,CHIP 3.3M 1/16W 1608
R1027	1-216-863-11	s	RESISTOR,CHIP 3.3M 1/16W 1608
R1028	1-218-881-11	s	RESISTOR, CHIP 27K 1/10W(1608)
R1029	1-218-847-11	s	RESISTOR, CHIP 1K 1/10W (1608)
R1030	1-218-867-11	s	RESISTOR,CHIP 6.8K 1/10W(1608)
R1031	1-218-847-11	s	RESISTOR, CHIP 1K 1/10W (1608)
R1032	1-218-867-11	s	RESISTOR,CHIP 6.8K 1/10W(1608)
R1033	1-218-847-11	s	RESISTOR, CHIP 1K 1/10W (1608)
R1034	1-218-867-11	s	RESISTOR,CHIP 6.8K 1/10W(1608)
R1035	1-218-847-11	s	RESISTOR, CHIP 1K 1/10W (1608)
R1036	1-218-867-11	s	RESISTOR,CHIP 6.8K 1/10W(1608)
R1037	1-218-875-11	s	RESISTOR,CHIP 15K 1/10W (1608)
R1039	1-218-849-11	s	RESISTOR,CHIP 1.2K 1/10W(1608)
R1040	1-218-863-11	s	RESISTOR,CHIP 4.7K 1/10W(1608)
R1041	1-218-847-11	s	RESISTOR, CHIP 1K 1/10W (1608)
R1042	1-218-847-11	s	RESISTOR, CHIP 1K 1/10W (1608)
R1043	1-218-847-11	s	RESISTOR, CHIP 1K 1/10W (1608)
R1044	1-218-847-11	s	RESISTOR, CHIP 1K 1/10W (1608)
R1045	1-218-847-11	s	RESISTOR, CHIP 1K 1/10W (1608)
R1046	1-218-854-11	s	RESISTOR,CHIP 2K 1/10W (1608)
R1047	1-218-854-11	s	RESISTOR,CHIP 2K 1/10W (1608)
R1048	1-218-859-11	s	RESISTOR,CHIP 3.3K 1/10W(1608)
R1049	1-218-857-11	s	RESISTOR,CHIP 2.7K 1/10W(1608)
R1050	1-218-857-11	s	RESISTOR,CHIP 2.7K 1/10W(1608)
R1051	1-218-857-11	s	RESISTOR,CHIP 2.7K 1/10W(1608)
R1052	1-218-847-11	s	RESISTOR, CHIP 1K 1/10W (1608)
R1053	1-218-847-11	s	RESISTOR, CHIP 1K 1/10W (1608)
R1054	1-218-847-11	s	RESISTOR, CHIP 1K 1/10W (1608)
R1055	1-218-854-11	s	RESISTOR,CHIP 2K 1/10W (1608)
R1056	1-218-854-11	s	RESISTOR,CHIP 2K 1/10W (1608)
R1057	1-218-854-11	s	RESISTOR,CHIP 2K 1/10W (1608)
R1058	1-218-854-11	s	RESISTOR,CHIP 2K 1/10W (1608)
R1061	1-211-990-11	s	RESISTOR,CHIP 75 1/10W (1608)
R1062	1-211-990-11	s	RESISTOR,CHIP 75 1/10W (1608)
R1063	1-211-990-11	s	RESISTOR,CHIP 75 1/10W (1608)
R1064	1-211-990-11	s	RESISTOR,CHIP 75 1/10W (1608)
R1065	1-211-990-11	s	RESISTOR,CHIP 75 1/10W (1608)
R1066	1-211-990-11	s	RESISTOR,CHIP 75 1/10W (1608)
R1069	1-218-823-11	s	RESISTOR,CHIP 100 1/10W (1608)
R1070	1-218-823-11	s	RESISTOR,CHIP 100 1/10W (1608)
R1072	1-211-985-11	s	RESISTOR,CHIP 47 1/10W (1608)
R1073	1-211-985-11	s	RESISTOR,CHIP 47 1/10W (1608)
R1074	1-218-823-11	s	RESISTOR,CHIP 100 1/10W (1608)
R1075	1-218-823-11	s	RESISTOR,CHIP 100 1/10W (1608)
R1076	1-218-823-11	s	RESISTOR,CHIP 100 1/10W (1608)
R1077	1-218-863-11	s	RESISTOR,CHIP 4.7K 1/10W(1608)
R1079	1-216-864-11	s	CONDUCTOR, CHIP (1608)
R1080	1-218-871-11	s	RESISTOR,CHIP 10K 1/10W (1608)
R1081	1-218-871-11	s	RESISTOR,CHIP 10K 1/10W (1608)
R1082	1-218-895-11	s	RESISTOR,CHIP 100K 1/10W(1608)
R1083	1-218-871-11	s	RESISTOR,CHIP 10K 1/10W (1608)
R1084	1-218-871-11	s	RESISTOR,CHIP 10K 1/10W (1608)

(VPR-91 BOARD)

Ref. No. or Q'ty	Part No.	SP	Description
R1085	1-218-871-11	s	RESISTOR,CHIP 10K 1/10W (1608)
R1086	1-218-871-11	s	RESISTOR,CHIP 10K 1/10W (1608)
R1087	1-218-871-11	s	RESISTOR,CHIP 10K 1/10W (1608)
R1088	1-218-871-11	s	RESISTOR,CHIP 10K 1/10W (1608)
R1089	1-218-871-11	s	RESISTOR,CHIP 10K 1/10W (1608)
R1090	1-218-871-11	s	RESISTOR,CHIP 10K 1/10W (1608)
R1091	1-218-847-11	s	RESISTOR, CHIP 1K 1/10W (1608)
R1102	1-218-847-11	s	RESISTOR, CHIP 1K 1/10W (1608)
R1103	1-211-985-11	s	RESISTOR,CHIP 47 1/10W (1608)
R1104	1-218-845-11	s	RESISTOR,CHIP 820 1/10W (1608)
R1105	1-218-847-11	s	RESISTOR, CHIP 1K 1/10W (1608)
R1106	1-218-847-11	s	RESISTOR, CHIP 1K 1/10W (1608)
R1107	1-218-857-11	s	RESISTOR,CHIP 2.7K 1/10W(1608)
R1108	1-218-831-11	s	RESISTOR, CHIP 220 1/10W(1608)
R1109	1-218-871-11	s	RESISTOR,CHIP 10K 1/10W (1608)
R1110	1-218-855-11	s	RESISTOR,CHIP 2.2K 1/10W(1608)
R1111	1-218-871-11	s	RESISTOR,CHIP 10K 1/10W (1608)
R1112	1-216-863-11	s	RESISTOR,CHIP 3.3M 1/16W 1608
R1113	1-216-863-11	s	RESISTOR,CHIP 3.3M 1/16W 1608
R1114	1-218-855-11	s	RESISTOR,CHIP 2.2K 1/10W(1608)
R1115	1-218-871-11	s	RESISTOR,CHIP 10K 1/10W (1608)
R1116	1-216-857-11	s	RESISTOR,CHIP 1M 1/10W(1608)
R1117	1-218-857-11	s	RESISTOR,CHIP 2.7K 1/10W(1608)
R1118	1-218-854-11	s	RESISTOR,CHIP 2K 1/10W (1608)
R1119	1-218-859-11	s	RESISTOR,CHIP 3.3K 1/10W(1608)
R1120	1-218-847-11	s	RESISTOR, CHIP 1K 1/10W (1608)
R1121	1-218-855-11	s	RESISTOR,CHIP 2.2K 1/10W(1608)
R1122	1-218-863-11	s	RESISTOR,CHIP 4.7K 1/10W(1608)
R1124	1-218-847-11	s	RESISTOR, CHIP 1K 1/10W (1608)
R1126	1-218-847-11	s	RESISTOR, CHIP 1K 1/10W (1608)
R1127	1-218-849-11	s	RESISTOR,CHIP 1.2K 1/10W(1608)
R1129	1-218-879-11	s	RESISTOR,CHIP 22K 1/10W (1608)
R1130	1-218-863-11	s	RESISTOR,CHIP 4.7K 1/10W(1608)
R1132	1-218-863-11	s	RESISTOR,CHIP 4.7K 1/10W(1608)
R1135	1-218-823-11	s	RESISTOR,CHIP 100 1/10W (1608)
R1136	1-218-823-11	s	RESISTOR,CHIP 100 1/10W (1608)
R1138	1-218-823-11	s	RESISTOR,CHIP 100 1/10W (1608)
R1139	1-218-847-11	s	RESISTOR, CHIP 1K 1/10W (1608)
R1140	1-218-847-11	s	RESISTOR, CHIP 1K 1/10W (1608)
R1141	1-218-847-11	s	RESISTOR, CHIP 1K 1/10W (1608)
R1142	1-218-847-11	s	RESISTOR, CHIP 1K 1/10W (1608)
R1143	1-211-977-11	s	RESISTOR,CHIP 22 1/10W (1608)
R1144	1-211-977-11	s	RESISTOR,CHIP 22 1/10W (1608)
R1145	1-211-977-11	s	RESISTOR,CHIP 22 1/10W (1608)
R1146	1-211-977-11	s	RESISTOR,CHIP 22 1/10W (1608)
R1148	1-218-823-11	s	RESISTOR,CHIP 100 1/10W (1608)
R1149	1-218-871-11	s	RESISTOR,CHIP 10K 1/10W (1608)
R1150	1-218-871-11	s	RESISTOR,CHIP 10K 1/10W (1608)
R1153	1-218-871-11	s	RESISTOR,CHIP 10K 1/10W (1608)
R1154	1-218-847-11	s	RESISTOR, CHIP 1K 1/10W (1608)
R1155	1-218-847-11	s	RESISTOR, CHIP 1K 1/10W (1608)
R1156	1-218-847-11	s	RESISTOR, CHIP 1K 1/10W (1608)
R1157	1-216-864-11	s	CONDUCTOR, CHIP (1608)
R1161	1-218-871-11	s	RESISTOR,CHIP 10K 1/10W (1608)
R1200	1-218-833-11	s	RESISTOR,CHIP 270 1/10W (1608)
R1201	1-218-865-11	s	RESISTOR,CHIP 5.6K 1/10W(1608)
R1202	1-218-865-11	s	RESISTOR,CHIP 5.6K 1/10W(1608)
R1203	1-218-855-11	s	RESISTOR,CHIP 2.2K 1/10W(1608)
R1204	1-218-864-11	s	RESISTOR,CHIP 5.1K 1/10W(1608)

(VPR-91 BOARD)

Ref. No. or Q'ty	Part No.	SP	Description
R1209	1-218-857-11	s	RESISTOR,CHIP 2.7K 1/10W(1608)
R1210	1-216-864-11	s	CONDUCTOR, CHIP (1608)
R1211	1-216-864-11	s	CONDUCTOR, CHIP (1608)
R1212	1-216-864-11	s	CONDUCTOR, CHIP (1608)
R1213	1-218-863-11	s	RESISTOR,CHIP 4.7K 1/10W(1608)
R1214	1-216-864-11	s	CONDUCTOR, CHIP (1608)
R1215	1-216-864-11	s	CONDUCTOR, CHIP (1608)
R1216	1-216-864-11	s	CONDUCTOR, CHIP (1608)
R1217	1-216-864-11	s	CONDUCTOR, CHIP (1608)
R1218	1-216-864-11	s	CONDUCTOR, CHIP (1608)
R1219	1-216-864-11	s	CONDUCTOR, CHIP (1608)
R1220	1-216-864-11	s	CONDUCTOR, CHIP (1608)
R1221	1-216-864-11	s	CONDUCTOR, CHIP (1608)
R1222	1-216-864-11	s	CONDUCTOR, CHIP (1608)
R1226	1-211-985-11	s	RESISTOR,CHIP 47 1/10W (1608)
R1227	1-218-839-11	s	RESISTOR,CHIP 470 1/10W (1608)
R1231	1-218-871-11	s	RESISTOR,CHIP 10K 1/10W (1608)
R1232	1-218-871-11	s	RESISTOR,CHIP 10K 1/10W (1608)
R1236	1-218-889-11	s	RESISTOR,CHIP 56K 1/10W(1608)
R1237	1-216-864-11	s	CONDUCTOR, CHIP (1608)
R1238	1-218-839-11	s	RESISTOR,CHIP 470 1/10W (1608)
R1239	1-216-857-11	s	RESISTOR,CHIP 1M 1/10W(1608)
R1240	1-216-857-11	s	RESISTOR,CHIP 1M 1/10W(1608)
R1242	1-218-871-11	s	RESISTOR,CHIP 10K 1/10W (1608)
R1243	1-218-895-11	s	RESISTOR,CHIP 100K 1/10W(1608)
R1245	1-218-893-11	s	RESISTOR, CHIP 82K 1/10W(1608)
R1246	1-218-879-11	s	RESISTOR,CHIP 22K 1/10W (1608)
R1247	1-218-879-11	s	RESISTOR,CHIP 22K 1/10W (1608)
R1248	1-218-823-11	s	RESISTOR,CHIP 100 1/10W (1608)
R1249	1-220-800-91	s	RESISTOR, CHIP 1.5M (1608)
R1250	1-218-823-11	s	RESISTOR,CHIP 100 1/10W (1608)
R1252	1-218-887-11	s	RESISTOR,CHIP 47K 1/10W (1608)
R1253	1-218-847-11	s	RESISTOR, CHIP 1K 1/10W (1608)
R1254	1-218-861-11	s	RESISTOR,CHIP 3.9K 1/10W(1608)
R1255	1-216-864-11	s	CONDUCTOR, CHIP (1608)
R1256	1-218-911-11	s	RESISTOR,CHIP 470K 1/10W(1608)
R1257	1-218-878-11	s	RESISTOR,CHIP 20K 1/10W (1608)
R1258	1-218-855-11	s	RESISTOR,CHIP 2.2K 1/10W(1608)
R1259	1-218-847-11	s	RESISTOR, CHIP 1K 1/10W (1608)
R1260	1-218-882-11	s	RESISTOR, CHIP 30K 1/10W(1608)
R1261	1-218-839-11	s	RESISTOR,CHIP 470 1/10W (1608)
R1262	1-218-845-11	s	RESISTOR,CHIP 820 1/10W (1608)
R1263	1-216-857-11	s	RESISTOR,CHIP 1M 1/10W(1608)
R1264	1-211-985-11	s	RESISTOR,CHIP 47 1/10W (1608)
R1266	1-218-847-11	s	RESISTOR, CHIP 1K 1/10W (1608)
R1267	1-218-839-11	s	RESISTOR,CHIP 470 1/10W (1608)
R1269	1-218-871-11	s	RESISTOR,CHIP 10K 1/10W (1608)
R1270	1-218-871-11	s	RESISTOR,CHIP 10K 1/10W (1608)
R1271	1-218-871-11	s	RESISTOR,CHIP 10K 1/10W (1608)
R1272	1-218-883-11	s	RESISTOR,CHIP 33K 1/10W (1608)
R1274	1-218-891-11	s	RESISTOR,CHIP 68K 1/10W (1608)
R1275	1-218-839-11	s	RESISTOR,CHIP 470 1/10W (1608)
R1276	1-218-847-11	s	RESISTOR, CHIP 1K 1/10W (1608)
R1277	1-218-847-11	s	RESISTOR, CHIP 1K 1/10W (1608)
R1278	1-218-871-11	s	RESISTOR,CHIP 10K 1/10W (1608)
R1279	1-218-871-11	s	RESISTOR,CHIP 10K 1/10W (1608)
R1280	1-218-863-11	s	RESISTOR,CHIP 4.7K 1/10W(1608)
R1281	1-218-881-11	s	RESISTOR, CHIP 27K 1/10W(1608)
R1282	1-211-985-11	s	RESISTOR,CHIP 47 1/10W (1608)

(VPR-91 BOARD)

Ref. No. or Q'ty	Part No.	SP	Description
R1283	1-211-985-11	s	RESISTOR,CHIP 47 1/10W (1608)
R1284	1-218-855-11	s	RESISTOR,CHIP 2.2K 1/10W(1608)
R1285	1-218-868-11	s	RESISTOR,CHIP 7.5K 1/10W(1608)
R1286	1-218-867-11	s	RESISTOR,CHIP 6.8K 1/10W(1608)
R1287	1-218-874-11	s	RESISTOR,CHIP 13K 1/10W (1608)
R1288	1-218-823-11	s	RESISTOR,CHIP 100 1/10W (1608)
R1289	1-218-885-11	s	RESISTOR,CHIP 39K 1/10W (1608)
R1290	1-218-839-11	s	RESISTOR,CHIP 470 1/10W (1608)
R1291	1-218-855-11	s	RESISTOR,CHIP 2.2K 1/10W(1608)
R1292	1-211-985-11	s	RESISTOR,CHIP 47 1/10W (1608)
R1293	1-218-895-11	s	RESISTOR,CHIP 100K 1/10W(1608)
R1294	1-218-871-11	s	RESISTOR,CHIP 10K 1/10W (1608)
R1295	1-218-895-11	s	RESISTOR,CHIP 100K 1/10W(1608)
R1296	1-218-879-11	s	RESISTOR,CHIP 22K 1/10W (1608)
R1297	1-218-877-11	s	RESISTOR,CHIP 18K 1/10W (1608)
R1298	1-218-847-11	s	RESISTOR, CHIP 1K 1/10W (1608)
R1299	1-218-871-11	s	RESISTOR,CHIP 10K 1/10W (1608)
R1300	1-218-874-11	s	RESISTOR,CHIP 13K 1/10W (1608)
R1301	1-218-871-11	s	RESISTOR,CHIP 10K 1/10W (1608)
R1302	1-218-895-11	s	RESISTOR,CHIP 100K 1/10W(1608)
R1305	1-218-823-11	s	RESISTOR,CHIP 100 1/10W (1608)
R1310	1-218-878-11	s	RESISTOR,CHIP 20K 1/10W (1608)
R1311	1-218-878-11	s	RESISTOR,CHIP 20K 1/10W (1608)
R1312	1-218-844-11	s	RESISTOR,CHIP 750 1/10W (1608)
R1313	1-218-844-11	s	RESISTOR,CHIP 750 1/10W (1608)
R1314	1-216-857-11	s	RESISTOR,CHIP 1M 1/10W(1608)
R1315	1-218-823-11	s	RESISTOR,CHIP 100 1/10W (1608)
R1316	1-218-823-11	s	RESISTOR,CHIP 100 1/10W (1608)
R1317	1-218-823-11	s	RESISTOR,CHIP 100 1/10W (1608)
R1318	1-218-823-11	s	RESISTOR,CHIP 100 1/10W (1608)
R1319	1-218-823-11	s	RESISTOR,CHIP 100 1/10W (1608)
R1320	1-218-823-11	s	RESISTOR,CHIP 100 1/10W (1608)
R1321	1-218-823-11	s	RESISTOR,CHIP 100 1/10W (1608)
R1322	1-218-823-11	s	RESISTOR,CHIP 100 1/10W (1608)
R1323	1-218-823-11	s	RESISTOR,CHIP 100 1/10W (1608)
R1324	1-218-823-11	s	RESISTOR,CHIP 100 1/10W (1608)
R1325	1-218-894-11	s	RESISTOR,CHIP 91K 1/10W (1608)
R1326	1-218-894-11	s	RESISTOR,CHIP 91K 1/10W (1608)
R1327	1-218-871-11	s	RESISTOR,CHIP 10K 1/10W (1608)
R1328	1-218-871-11	s	RESISTOR,CHIP 10K 1/10W (1608)
R1329	1-218-823-11	s	RESISTOR,CHIP 100 1/10W (1608)
R1330	1-218-871-11	s	RESISTOR,CHIP 10K 1/10W (1608)
R1331	1-218-879-11	s	RESISTOR,CHIP 22K 1/10W (1608)
R1332	1-218-823-11	s	RESISTOR,CHIP 100 1/10W (1608)
R1333	1-218-823-11	s	RESISTOR,CHIP 100 1/10W (1608)
R1334	1-218-823-11	s	RESISTOR,CHIP 100 1/10W (1608)
R1335	1-218-823-11	s	RESISTOR,CHIP 100 1/10W (1608)
R1336	1-216-864-11	s	CONDUCTOR, CHIP (1608)
R1337	1-211-977-11	s	RESISTOR,CHIP 22 1/10W (1608)
R1338	1-218-871-11	s	RESISTOR,CHIP 10K 1/10W (1608)
R1339	1-218-871-11	s	RESISTOR,CHIP 10K 1/10W (1608)
R1340	1-218-848-11	s	RESISTOR,CHIP 1.1K 1/10W(1608)
R1343	1-216-864-11	s	CONDUCTOR, CHIP (1608)
R1344	1-216-864-11	s	CONDUCTOR, CHIP (1608)
R1345	1-218-839-11	s	RESISTOR,CHIP 470 1/10W (1608)
R1346	1-218-890-11	s	RESISTOR, CHIP 62K 1/10W(1608)
R1347	1-218-823-11	s	RESISTOR,CHIP 100 1/10W (1608)
R1348	1-218-823-11	s	RESISTOR,CHIP 100 1/10W (1608)
R1349	1-218-823-11	s	RESISTOR,CHIP 100 1/10W (1608)

(VPR-91 BOARD)

Ref. No. or Q'ty	Part No.	SP	Description
R1350	1-218-823-11	s	RESISTOR,CHIP 100 1/10W (1608)
R1382	1-216-864-11	s	CONDUCTOR, CHIP (1608)
R1383	1-216-864-11	s	CONDUCTOR, CHIP (1608)
R1385	1-218-835-11	s	RESISTOR,CHIP 330 1/10W (1608)
R1386	1-218-847-11	s	RESISTOR, CHIP 1K 1/10W (1608)
R1387	1-218-847-11	s	RESISTOR, CHIP 1K 1/10W (1608)
R1388	1-218-859-11	s	RESISTOR,CHIP 3.3K 1/10W(1608)
R1389	1-218-855-11	s	RESISTOR,CHIP 2.2K 1/10W(1608)
R1390	1-218-860-11	s	RESISTOR,CHIP 3.6K 1/10W(1608)
R1392	1-216-864-11	s	CONDUCTOR, CHIP (1608)
R1393	1-211-985-11	s	RESISTOR,CHIP 47 1/10W (1608)
R1394	1-216-864-11	s	CONDUCTOR, CHIP (1608)
R1401	1-211-985-11	s	RESISTOR,CHIP 47 1/10W (1608)
R1402	1-216-864-11	s	CONDUCTOR, CHIP (1608)
R1403	1-211-985-11	s	RESISTOR,CHIP 47 1/10W (1608)
R1404	1-218-895-11	s	RESISTOR,CHIP 100K 1/10W(1608)
R1405	1-216-864-11	s	CONDUCTOR, CHIP (1608)
R1406	1-211-985-11	s	RESISTOR,CHIP 47 1/10W (1608)
R1407	1-218-839-11	s	RESISTOR,CHIP 470 1/10W (1608)
R1409	1-216-864-11	s	CONDUCTOR, CHIP (1608)
R1410	1-218-839-11	s	RESISTOR,CHIP 470 1/10W (1608)
R1411	1-218-839-11	s	RESISTOR,CHIP 470 1/10W (1608)
R1412	1-218-895-11	s	RESISTOR,CHIP 100K 1/10W(1608)
R1413	1-216-864-11	s	CONDUCTOR, CHIP (1608)
R1414	1-216-864-11	s	CONDUCTOR, CHIP (1608)
R1415	1-218-895-11	s	RESISTOR,CHIP 100K 1/10W(1608)
R1416	1-218-857-11	s	RESISTOR,CHIP 2.7K 1/10W(1608)
R1419	1-218-857-11	s	RESISTOR,CHIP 2.7K 1/10W(1608)
R1420	1-218-857-11	s	RESISTOR,CHIP 2.7K 1/10W(1608)
R1421	1-218-895-11	s	RESISTOR,CHIP 100K 1/10W(1608)
R1422	1-216-864-11	s	CONDUCTOR, CHIP (1608)
R1423	1-218-871-11	s	RESISTOR,CHIP 10K 1/10W (1608)
R1424	1-218-839-11	s	RESISTOR,CHIP 470 1/10W (1608)
R1427	1-218-871-11	s	RESISTOR,CHIP 10K 1/10W (1608)
R1428	1-218-839-11	s	RESISTOR,CHIP 470 1/10W (1608)
R1429	1-218-871-11	s	RESISTOR,CHIP 10K 1/10W (1608)
R1430	1-218-839-11	s	RESISTOR,CHIP 470 1/10W (1608)
R1431	1-218-871-11	s	RESISTOR,CHIP 10K 1/10W (1608)
R1432	1-218-839-11	s	RESISTOR,CHIP 470 1/10W (1608)
R1433	1-218-823-11	s	RESISTOR,CHIP 100 1/10W (1608)
R1435	1-218-823-11	s	RESISTOR,CHIP 100 1/10W (1608)
R1436	1-218-823-11	s	RESISTOR,CHIP 100 1/10W (1608)
R1437	1-218-823-11	s	RESISTOR,CHIP 100 1/10W (1608)
R1438	1-218-839-11	s	RESISTOR,CHIP 470 1/10W (1608)
R1439	1-218-839-11	s	RESISTOR,CHIP 470 1/10W (1608)
R1440	1-211-985-11	s	RESISTOR,CHIP 47 1/10W (1608)
R1441	1-218-857-11	s	RESISTOR,CHIP 2.7K 1/10W(1608)
R1442	1-218-871-11	s	RESISTOR,CHIP 10K 1/10W (1608)
R1444	1-211-985-11	s	RESISTOR,CHIP 47 1/10W (1608)
R1445	1-211-985-11	s	RESISTOR,CHIP 47 1/10W (1608)
R1446	1-211-985-11	s	RESISTOR,CHIP 47 1/10W (1608)
R1447	1-211-985-11	s	RESISTOR,CHIP 47 1/10W (1608)
R1448	1-211-985-11	s	RESISTOR,CHIP 47 1/10W (1608)
R1449	1-211-985-11	s	RESISTOR,CHIP 47 1/10W (1608)
R1450	1-211-977-11	s	RESISTOR,CHIP 22 1/10W (1608)
R1451	1-218-895-11	s	RESISTOR,CHIP 100K 1/10W(1608)
R1452	1-216-864-11	s	CONDUCTOR, CHIP (1608)
R1453	1-216-864-11	s	CONDUCTOR, CHIP (1608)
R1454	1-216-864-11	s	CONDUCTOR, CHIP (1608)

(VPR-91 BOARD)

Ref. No. or Q'ty	Part No.	SP	Description
R1455	1-216-864-11	s	CONDUCTOR, CHIP (1608)
R1456	1-216-864-11	s	CONDUCTOR, CHIP (1608)
R1457	1-211-985-11	s	RESISTOR,CHIP 47 1/10W (1608)
R1458	1-218-823-11	s	RESISTOR,CHIP 100 1/10W (1608)
R1460	1-216-864-11	s	CONDUCTOR, CHIP (1608)
R1462	1-211-985-11	s	RESISTOR,CHIP 47 1/10W (1608)
R1463	1-211-985-11	s	RESISTOR,CHIP 47 1/10W (1608)
R1500	1-211-985-11	s	RESISTOR,CHIP 47 1/10W (1608)
R1502	1-218-823-11	s	RESISTOR,CHIP 100 1/10W (1608)
R1503	1-218-831-11	s	RESISTOR, CHIP 220 1/10W(1608)
R1504	1-218-831-11	s	RESISTOR, CHIP 220 1/10W(1608)
R1505	1-218-831-11	s	RESISTOR, CHIP 220 1/10W(1608)
R1506	1-218-831-11	s	RESISTOR, CHIP 220 1/10W(1608)
R1507	1-218-831-11	s	RESISTOR, CHIP 220 1/10W(1608)
R1508	1-218-831-11	s	RESISTOR, CHIP 220 1/10W(1608)
R1509	1-218-831-11	s	RESISTOR, CHIP 220 1/10W(1608)
R1510	1-218-831-11	s	RESISTOR, CHIP 220 1/10W(1608)
R1511	1-218-831-11	s	RESISTOR, CHIP 220 1/10W(1608)
R1512	1-218-831-11	s	RESISTOR, CHIP 220 1/10W(1608)
R1513	1-218-831-11	s	RESISTOR, CHIP 220 1/10W(1608)
R1514	1-218-831-11	s	RESISTOR, CHIP 220 1/10W(1608)
R1515	1-218-831-11	s	RESISTOR, CHIP 220 1/10W(1608)
R1516	1-218-831-11	s	RESISTOR, CHIP 220 1/10W(1608)
R1517	1-218-831-11	s	RESISTOR, CHIP 220 1/10W(1608)
R1518	1-218-831-11	s	RESISTOR, CHIP 220 1/10W(1608)
R1519	1-218-895-11	s	RESISTOR,CHIP 100K 1/10W(1608)
R1520	1-218-831-11	s	RESISTOR, CHIP 220 1/10W(1608)
R1521	1-216-864-11	s	CONDUCTOR, CHIP (1608)
R1522	1-216-864-11	s	CONDUCTOR, CHIP (1608)
R1523	1-216-864-11	s	CONDUCTOR, CHIP (1608)
R1524	1-218-887-11	s	RESISTOR,CHIP 47K 1/10W (1608)
R1525	1-218-837-11	s	RESISTOR,CHIP 390 1/10W (1608)
R1526	1-218-871-11	s	RESISTOR,CHIP 10K 1/10W (1608)
R1527	1-218-871-11	s	RESISTOR,CHIP 10K 1/10W (1608)
R1530	1-211-977-11	s	RESISTOR,CHIP 22 1/10W (1608)
R1531	1-211-977-11	s	RESISTOR,CHIP 22 1/10W (1608)
R1532	1-211-977-11	s	RESISTOR,CHIP 22 1/10W (1608)
R1533	1-211-977-11	s	RESISTOR,CHIP 22 1/10W (1608)
R1534	1-211-977-11	s	RESISTOR,CHIP 22 1/10W (1608)
R1535	1-211-977-11	s	RESISTOR,CHIP 22 1/10W (1608)
R1536	1-211-977-11	s	RESISTOR,CHIP 22 1/10W (1608)
R1537	1-211-977-11	s	RESISTOR,CHIP 22 1/10W (1608)
R1538	1-218-895-11	s	RESISTOR,CHIP 100K 1/10W(1608)
R1539	1-218-895-11	s	RESISTOR,CHIP 100K 1/10W(1608)
R1540	1-218-895-11	s	RESISTOR,CHIP 100K 1/10W(1608)
R1541	1-218-895-11	s	RESISTOR,CHIP 100K 1/10W(1608)
R1544	1-218-895-11	s	RESISTOR,CHIP 100K 1/10W(1608)
R1545	1-218-895-11	s	RESISTOR,CHIP 100K 1/10W(1608)
R1546	1-218-863-11	s	RESISTOR,CHIP 4.7K 1/10W(1608)
R1547	1-218-863-11	s	RESISTOR,CHIP 4.7K 1/10W(1608)
R1548	1-218-871-11	s	RESISTOR,CHIP 10K 1/10W (1608)
R1549	1-218-871-11	s	RESISTOR,CHIP 10K 1/10W (1608)
R1550	1-218-847-11	s	RESISTOR, CHIP 1K 1/10W (1608)
R1551	1-218-847-11	s	RESISTOR, CHIP 1K 1/10W (1608)
R1552	1-218-847-11	s	RESISTOR, CHIP 1K 1/10W (1608)
R1553	1-218-863-11	s	RESISTOR,CHIP 4.7K 1/10W(1608)
R1554	1-218-871-11	s	RESISTOR,CHIP 10K 1/10W (1608)
R1555	1-211-977-11	s	RESISTOR,CHIP 22 1/10W (1608)
R1556	1-211-985-11	s	RESISTOR,CHIP 47 1/10W (1608)

(VPR-91 BOARD)

Ref. No. or Q'ty	Part No.	SP	Description
R1557	1-218-895-11	s	RESISTOR,CHIP 100K 1/10W(1608)
R1558	1-216-864-11	s	CONDUCTOR, CHIP (1608)
R1590	1-218-847-11	s	RESISTOR, CHIP 1K 1/10W (1608)
R1591	1-218-847-11	s	RESISTOR, CHIP 1K 1/10W (1608)
R1592	1-218-835-11	s	RESISTOR,CHIP 330 1/10W (1608)
R1593	1-218-835-11	s	RESISTOR,CHIP 330 1/10W (1608)
R1594	1-218-871-11	s	RESISTOR,CHIP 10K 1/10W (1608)
RB700	1-233-411-11	s	RESISTOR,CHIP NETWORK 220/3216
RB701	1-233-411-11	s	RESISTOR,CHIP NETWORK 220/3216
RB702	1-233-411-11	s	RESISTOR,CHIP NETWORK 220/3216
RB703	1-233-411-11	s	RESISTOR,CHIP NETWORK 220/3216
RB704	1-233-411-11	s	RESISTOR,CHIP NETWORK 220/3216
RB705	1-233-411-11	s	RESISTOR,CHIP NETWORK 220/3216
RB719	1-236-908-11	s	RESISTOR,NETWORK 10K (3216)
RB720	1-236-908-11	s	RESISTOR,NETWORK 10K (3216)
RB800	1-233-411-11	s	RESISTOR,CHIP NETWORK 220/3216
RB801	1-233-411-11	s	RESISTOR,CHIP NETWORK 220/3216
RB802	1-233-411-11	s	RESISTOR,CHIP NETWORK 220/3216
RB803	1-233-411-11	s	RESISTOR,CHIP NETWORK 220/3216
RB804	1-233-411-11	s	RESISTOR,CHIP NETWORK 220/3216
RB805	1-233-411-11	s	RESISTOR,CHIP NETWORK 220/3216
RB806	1-233-411-11	s	RESISTOR,CHIP NETWORK 220/3216
RB807	1-233-411-11	s	RESISTOR,CHIP NETWORK 220/3216
RB808	1-233-411-11	s	RESISTOR,CHIP NETWORK 220/3216
RB809	1-233-411-11	s	RESISTOR,CHIP NETWORK 220/3216
RB1100	1-233-411-11	s	RESISTOR,CHIP NETWORK 220/3216
RB1101	1-233-411-11	s	RESISTOR,CHIP NETWORK 220/3216
RB1500	1-234-397-11	s	NETWORK, RES (8 GANG) 100K
RB1501	1-234-397-11	s	NETWORK, RES (8 GANG) 100K
RB1502	1-234-397-11	s	NETWORK, RES (8 GANG) 100K
RB1503	1-234-397-11	s	NETWORK, RES (8 GANG) 100K
RB1504	1-234-397-11	s	NETWORK, RES (8 GANG) 100K
RB1505	1-234-397-11	s	NETWORK, RES (8 GANG) 100K
RB1506	1-234-397-11	s	NETWORK, RES (8 GANG) 100K
RB1507	1-234-397-11	s	NETWORK, RES (8 GANG) 100K
RB1508	1-234-397-11	s	NETWORK, RES (8 GANG) 100K
RB1509	1-234-397-11	s	NETWORK, RES (8 GANG) 100K
RV1	1-225-786-11	s	RES, ADJ, CERMET 200
RV2	1-225-786-11	s	RES, ADJ, CERMET 200
TH100	1-810-812-11	s	THERMISTOR, NTC (1608)
TP103	1-535-877-22	s	CHIP,CHECKER (TEST POINT)
TP105	1-535-877-22	s	CHIP,CHECKER (TEST POINT)
TP300	1-535-877-22	s	CHIP,CHECKER (TEST POINT)
TP503	1-535-877-22	s	CHIP,CHECKER (TEST POINT)
TP504	1-535-877-22	s	CHIP,CHECKER (TEST POINT)
TP505	1-535-877-22	s	CHIP,CHECKER (TEST POINT)
TP506	1-535-877-22	s	CHIP,CHECKER (TEST POINT)
TP800	1-535-877-22	s	CHIP,CHECKER (TEST POINT)
TP900	1-535-877-22	s	CHIP,CHECKER (TEST POINT)
TP901	1-535-877-22	s	CHIP,CHECKER (TEST POINT)
TP902	1-535-877-22	s	CHIP,CHECKER (TEST POINT)
TP903	1-535-877-22	s	CHIP,CHECKER (TEST POINT)
TP904	1-535-877-22	s	CHIP,CHECKER (TEST POINT)
TP905	1-535-877-22	s	CHIP,CHECKER (TEST POINT)
TP906	1-535-877-22	s	CHIP,CHECKER (TEST POINT)
TP907	1-535-877-22	s	CHIP,CHECKER (TEST POINT)
TP908	1-535-877-22	s	CHIP,CHECKER (TEST POINT)

(VPR-91 BOARD)

Ref. No. or Q'ty	Part No.	SP	Description
TP909	1-535-877-22	s	CHIP,CHECKER (TEST POINT)
TP910	1-535-877-22	s	CHIP,CHECKER (TEST POINT)
TP911	1-535-877-22	s	CHIP,CHECKER (TEST POINT)
TP1100	1-535-877-22	s	CHIP,CHECKER (TEST POINT)
TP1200	1-535-877-22	s	CHIP,CHECKER (TEST POINT)
TP1201	1-535-877-22	s	CHIP,CHECKER (TEST POINT)
X300	1-813-252-11	s	OSCILLATOR, CRYSTAL
X301	1-813-251-11	s	OSCILLATOR, CRYSTAL
X302	1-795-764-11	s	OSCILLATOR, CRYSTAL
X900	1-813-251-11	s	OSCILLATOR, CRYSTAL
X901	1-813-252-11	s	OSCILLATOR, CRYSTAL
X1203	1-795-764-11	s	OSCILLATOR, CRYSTAL
X1204	1-795-761-11	s	OSCILLATOR, CRYSTAL
X1205	1-795-762-11	s	OSCILLATOR, CRYSTAL
X1206 *2	1-813-253-11	s	OSCILLATOR, CRYSTAL

VR-262 (AC014AA) BOARD
---
*M: MSW-2000, M2000/P, A2000/P, M2100/P
*H: HDW-2000, M2000/P, M2100/P, A2100

Ref. No. or Q'ty	Part No.	SP	Description
1pc *M	9-885-012-31	o	MOUNTED CIRCUIT BOARD, VR-262
*H	9-885-012-34	o	MOUNTED CIRCUIT BOARD, VR-262
VR1	1-225-565-11	s	RES, VAR, CARBON (WITH SW) 5K
VR2	1-225-565-11	s	RES, VAR, CARBON (WITH SW) 5K
VR3	1-225-565-11	s	RES, VAR, CARBON (WITH SW) 5K
VR4	1-225-565-11	s	RES, VAR, CARBON (WITH SW) 5K
VR5	1-225-565-11	s	RES, VAR, CARBON (WITH SW) 5K
VR6	1-225-565-11	s	RES, VAR, CARBON (WITH SW) 5K
VR7	1-225-565-11	s	RES, VAR, CARBON (WITH SW) 5K
VR8	1-225-565-11	s	RES, VAR, CARBON (WITH SW) 5K

VR-300 (1P50A973) BOARD

---

*H, *HR: HDW-2000; D2000, M2000/P, S2000/P
*H : HDW-M2100/P, A2100
*H, *HR: DVW-2000/P, M2000/P
*M, *MR: MSW-2000, M2000/P, M2000E/P, A2000/P
*M : MSW-M2100/P, M2100E/P

Ref. No. or Q'ty	Part No.	SP	Description
*H	9-885-061-90	s	MOUNTED CIRCUIT BOARD, VR-300
*HR	9-885-061-88	s	MOUNTED CIRCUIT BOARD, VR-300
*M	9-885-065-19	o	MOUNTED CIRCUIT BOARD, VR-300
*MR	9-885-065-18	o	MOUNTED CIRCUIT BOARD, VR-300
VR1	1-775-565-11	s	RES, VAR, CARBON (WITH SW) 5K
VR2	1-775-565-11	s	RES, VAR, CARBON (WITH SW) 5K
VR3	1-775-565-11	s	RES, VAR, CARBON (WITH SW) 5K
VR4	1-775-565-11	s	RES, VAR, CARBON (WITH SW) 5K
VR5	1-775-565-11	s	RES, VAR, CARBON (WITH SW) 5K
VR6	1-775-565-11	s	RES, VAR, CARBON (WITH SW) 5K
VR7	1-775-565-11	s	RES, VAR, CARBON (WITH SW) 5K
VR8	1-775-565-11	s	RES, VAR, CARBON (WITH SW) 5K

1-3-5. Power Supply Unit

Ref. No. or Q'ty	Part No.	SP	Description
1pc	⚠ 1-576-232-12	o	FUSE (H.B.C)
1pc	1-787-142-11	s	FAN, D. C.

1-4. Supplied Accessories

```
------------------------------
Supplied Accessories for HDW(J)
------------------------------
*A HDW-2000(J)
*B HDW-M2000(J)
*C HDW-S2000(J)
*D HDW-A2100(J)
*E HDW-M2100(J)

Q'ty     Part No.    SP Description

1pc      1-543-798-21 s FILTER, CLAMP (FERRITE CORE)

1pc    ⚠ ------------ s CORD SET, POWER
         Order the standard product "DK-2401(J)".

1pc    ⚠ 1-793-461-12 s PLUG, CONVERSION (3P-2P)
1pc      3-203-753-13 s MANUAL (J), INSTALLATION
1pc *A*B 3-204-952-08 s OPERATION MANUAL (J)
1pc *D*E 3-204-953-09 s OPERATION MANUAL (J)
1pc      3-613-640-01 o PLUG,HOLDER C

1pc   *C 3-854-862-02 s OPERATION MANUAL
4pcs     7-682-965-01 s SCREW +PSW 4X16
```

```
-------------------------------
Supplied Accessories for HDW(SY)
-------------------------------
*A HDW-2000(SY)
*B HDW-D2000(SY)
*C HDW-M2000(SY)
*D HDW-M2000P(SY)
*E HDW-S2000(SY)
*F HDW-S2000P(SY)
*G HDW-M2100(SY)
*H HDW-M2100P(SY)

Q'ty     Part No.    SP Description

1pc      1-543-798-21 s FILTER, CLAMP (FERRITE CORE)
1pc   *B 3-203-753-13 s MANUAL (J), INSTALLATION
1pc      3-203-754-14 s MANUAL (E), INSTALLATION
1pc *A*C
    *D*E
    *F*G
      *H 3-206-516-05 s OPERATION MANUAL (E)
1pc      3-691-034-10 s MANUAL (CD-ROM), OPERATION
1pc      3-863-966-01 s OPERATION GUIDE
4pcs     7-682-965-01 s SCREW +PSW 4X16

<Note>
The power supply cord is not attached.
Refer to Section 1-5.
```

```
---------------------------
Supplied Accessories for DVW
---------------------------
*A DVW-2000(SY)
*B DVW-2000P(SY)
*C DVW-M2000(SY)
*D DVW-M2000P(SY)

Q'ty     Part No.    SP Description

1pc *A*C 3-203-753-13 s MANUAL (J), INSTALLATION
1pc      3-203-754-14 s MANUAL (E), INSTALLATION
1pc *A*C 3-826-012-02 s OPERATION MANUAL
1pc      3-826-013-03 s OPERATION MANUAL
1pc      3-691-034-09 s MANUAL (CD-ROM), OPERATION

4pcs     7-682-965-01 s SCREW +PSW 4X16

<Note>
The power supply cord is not attached.
Refer to Section 1-5.
```

```
-------------------------------
Supplied Accessories for MSW(J)
-------------------------------
*A MSW-A2000(J)
*B MSW-M2000(J)
*C MSW-M2000E(J)
*D MSW-M2100(J)
*E MSW-M2100E(J)

Q'ty     Part No.    SP Description

1pc    ⚠ ------------ s CORD SET, POWER
         Order the standard product "DK-2401(J)".

1pc *C*E A-8286-066-B s MANUAL (CD-R), OPERATION
1pc    ⚠ 1-793-461-12 s PLUG, CONVERSION (3P-2P)
1pc      3-203-753-13 s MANUAL (J), INSTALLATION
1pc      3-613-640-01 o PLUG,HOLDER C
1pc *A*B
      *C 3-857-245-01 s OPERATION MANUAL (J)
1pc *D*E 3-857-247-01 s OPERATION MANUAL (J)
1pc *C*E 3-857-276-01 s MANUAL, INSTALLATION

4pcs     7-682-965-01 s SCREW +PSW 4X16
```

Supplied Accessories for MSW(SY)
---
*A MSW-2000(SY)
*B MSW-A2000(SY)
*C MSW-A2000P(SY)
*D MSW-M2000(SY)
*E MSW-M2000P(SY)
*F MSW-M2000E(SY)
*G MSW-M2000EP(SY)
*H MSW-M2100(SY)
*I MSW-M2100P(SY)
*J MSW-M2100E(SY)
*K MSW-M2100EP(SY)

Q'ty	Part No.	SP	Description
1pc *F*G *J*K	A-8286-066-B	s	MANUAL (CD-R), OPERATION
1pc *A	3-203-753-13	s	MANUAL (J), INSTALLATION
1pc	3-203-754-14	s	MANUAL (E), INSTALLATION
1pc *A	3-206-515-03	o	OPERATION MANUAL (J)
1pc	3-691-034-09	s	MANUAL (CD-ROM), OPERATION
1pc	3-857-231-01	s	OPERATION GUIDE (E/F/G)
4pcs	7-682-965-01	s	SCREW +PSW 4X16

<Note>
The power supply cord is not attached.
Refer to Section 1-5.

Supplied Accessories for HKDW-102(SY)

Q'ty	Part No.	SP	Description
4pcs	2-280-622-01	o	SUPPORT (M3), HEXAGON
4pcs	2-280-622-21	o	SUPPORT (M3), HEXAGON
1pc	3-619-328-02	s	MANUAL, INSTALLATION
1pc	3-619-352-02	s	OPERATION AND INSTALLATION GUIDE
8pcs	7-682-545-04	s	SCREW +B 3X4

Supplied Accessories for BKMW-104(SY)

Q'ty	Part No.	SP	Description
1pc	A-8344-526-A	s	PANEL ASSY, SDI/HD SDI Includes three cable assemblies below.
1pc	1-757-487-12	s	CABLE ASSY, COAXIAL
1pc	1-757-488-12	s	CABLE ASSY, COAXIAL
1pc	1-757-489-12	s	CABLE ASSY, COAXIAL
1pc	3-206-744-04	s	MANUAL, INSTALLATION
1pc	3-206-746-03	s	OPERATION AND INSTALLATION GUIDE
6pcs	7-685-871-01	s	SCREW, +BVTT 3X6

Supplied Accessories for BKMW-E2000(SY)

Q'ty	Part No.	SP	Description
1pc	A-8279-785-D	s	CD-R ASSY
1pc	3-704-046-31	s	BAG, PREVENTATION, ELECTRIFICATION
1pc	3-704-976-04	s	MANUAL, INSTALLATION
1pc	3-748-103-01	s	OPERATION MANUAL

Supplied Accessories for BKMW-E3000(SY)

Q'ty	Part No.	SP	Description
1pc	A-8286-066-B	s	MANUAL (CD-R), OPERATION
1pc	3-704-046-31	s	BAG, PREVENTATION, ELECTRIFICATION
1pc	3-857-232-01	s	OPERATION GUIDE (J/E/F/G)
1pc	3-857-276-01	s	MANUAL, INSTALLATION

1-5. Power Cords for SY Model

The power supply cord is not attached to SY model.
Use the cord listed below if necessary.

Q'ty	Part No.	SP	Description
1pc	⚠ 1-557-377-11	s	CORD, POWER (3-CORE) (U/C) (For the U.S.A. and Canada)
1pc	⚠ 1-782-165-11	o	CORD SET, POWER (For the United Kingdom)
1pc	⚠ 1-551-631-22	o	CORD SET, POWER (For Europe except the United Kingdom)
1pc	⚠ 1-783-481-11	o	CORD SET, POWER (For the China)
1pc	3-613-640-01	s	HOLDER (C), PLUG

1-6. Optional Fixtures

Part No.	SP	Description
A-8324-911-A	o	EXTENSION BOARD, EX-739
A-8325-508-A	o	RELAY BOARD, EX-802
A-8325-509-A	o	RELAY BOARD, EX-805
A-8325-510-A	o	EXTENSION BOARD, EX-761
A-8327-683-A	o	EXTENSION BOARD, EX-797
J-6035-070-A	o	EXTRACTION TOOL (for PLCC socket)
J-6080-029-A	o	SMALL DENTAL MIRROR (Round type dial2)
J-6251-090-A	o	TORQUE SCREWDRIVER'S HEXAGONAL BIT (d=2.5 mm, l=120 mm)
J-6252-510-A	o	TORQUE SCREWDRIVER (0.6 N.m) (6 kg.cm) [JB-5251]
J-6252-520-A	o	TORQUE SCREWDRIVER (1.2 N.m) (12 kg.cm) [JB-5252]
J-6322-610-A	o	TAPE GUIDE ADJUSTMENT DRIVER [MW-261]
J-6323-420-A	o	TORQUE SCREWDRIVER'S BIT (+2 mm, l=75 mm)
J-6323-430-A	o	TORQUE SCREWDRIVER'S BIT (+3 mm, l=90 mm)
J-6332-240-A	o	VISC PHASE ADJUSTING TOOL (for PAL model only)
J-6530-650-A	o	HEAD TIP PROTRUSION MEASUREMENT GAUGE
J-6531-200-A	o	CABLE FOR RS-232C TERMINALS
J-6531-210-A	o	PARALLEL CABLE 3
J-6531-220-A	o	HARNESS
1-677-293-21	o	EXTENSION FLEXIBLE BOARD (FL-276)
1-772-003-11	o	IC MEMORY CARD (2 MB), MB98A81183
1-772-004-11	o	IC MEMORY CARD (4 MB), MB98A81273
1-960-985-11	o	EXTRACTION HARNESS (DC OUT)
3-184-527-01	o	CLEANING CLOTH (15 cm x 15 cm)
3-205-709-01	s	SUPPORT
7-432-114-11	o	LOCKING COMPOUND (200 g)
7-651-000-10	o	SONY GREASE SGL-601 (50 g)
7-661-018-18	o	DIAMOND OIL NT-68 (50 ml)
7-700-736-05	o	L-SHAPED HEXAGONAL WRENCH (d=1.5 mm)
7-700-736-06	o	L-SHAPED HEXAGONAL WRENCH (d=0.89 mm)
7-700-766-04	o	HEXAGONAL WRENCH DRIVER (d=2.5 mm)
8-960-073-01	o	ALIGNMENT TAPE, ZR5-1 (for 525/60 Digital Betacam system)
8-960-073-11	o	ALIGNMENT TAPE, ZR2-1 (for 525/60 Digital Betacam system)
8-960-073-51	o	ALIGNMENT TAPE, ZR5-1P (for 625/50 Digital Betacam system)
8-960-073-61	o	ALIGNMENT TAPE, ZR2-1P (for 625/50 Digital Betacam system)
8-960-075-01	o	ALIGNMENT TAPE, SR5-1 (for 525/60 Betacam SX system)
8-960-075-51	o	ALIGNMENT TAPE, SR5-1P (for 625/50 Betacam SX system)
8-960-076-01	o	ALIGNMENT TAPE, HR5-1A (for HDCAM system)
8-960-076-11	o	ALIGNMENT TAPE, HR2-1A (for HDCAM system)
8-960-077-01	o	ALIGNMENT TAPE, MR5-1 (for 525/60 MPEG IMX system)

Part No.	SP	Description
8-960-077-51	o	ALIGNMENT TAPE, MR5-1P (for 625/50 MPEG IMX system)
8-960-077-61	o	ALIGNMENT TAPE, MR2-1P (for MPEG IMX)
8-960-096-01	o	ALIGNMENT TAPE, CR2-1B (for analog Betacam NTSC)
8-960-096-41	o	ALIGNMENT TAPE, CR5-1B (metal) (for analog Betacam NTSC)
8-960-096-51	o	ALIGNMENT TAPE, CR2-1B PS (for analog Betacam PAL)
8-960-096-86	o	ALIGNMENT TAPE, CR8-1B PS (metal) (for analog Betacam PAL)
8-960-096-91	o	ALIGNMENT TAPE, CR5-1B PS (metal) (for analog Betacam PAL)
8-960-097-44	o	ALIGNMENT TAPE, CR5-2A (oxide tape) (for analog Betacam NTSC)
8-960-097-45	o	ALIGNMENT TAPE, CR8-1A (oxide tape) (for analog Betacam NTSC)
8-960-098-44	o	ALIGNMENT TAPE, CR5-2A PS (oxide tape) (for analog Betacam PAL)
8-960-098-45	o	ALIGNMENT TAPE, CR8-1A PS (oxide tape) (for analog Betacam PAL)
9-919-573-01	o	CLEANING LIQUID

Section 2
Semiconductor Pin Assignments

The following describes the semiconductor types used in this unit.
For semiconductors marked with page numbers in the index, refer to the corresponding pages in this section. However, in some cases incompatible types are also listed, therefore, when a part is to be replaced, also refer to the Spare Parts section.
In addition, for semiconductors with ID Nos., refer to the separate CD-ROM titled "Semiconductor Pin Assignments" (Sony Part No. 9-968-546-xx) that allows searching for parts by semiconductor type or ID No.
The semiconductors in the manual or on the CD-ROM are listed by equivalent types. Thus the external view or the index mark indication may differ from the actual type.
Pin assignments and block diagrams are based on the IC manufacturer's data book.

本機に使用されている半導体型名の一覧を下記に示します。
索引中，ページが記載されている半導体は，本章の該当ページを参照してください。ただし，互換性のない型名を併記している場合がありますので，部品を交換するときは，Spare Partsの章を参照してください。
また，ID番号が記載されている半導体は，別途発行の "Semiconductor Pin Assignments" CD-ROM版 (ソニー部品番号：9-968-546-xx)を参照してください。
半導体型名またはID番号から検索ができます。
マニュアルまたはCD-ROMに掲載されている半導体は，それぞれの機能を等価的に表わしたものです。
外観やインデックスマークの表示方法が実物と異なる場合があります。
ピン配置およびブロック図はICメーカーのデータブックに従いました。

DIODE	Page or ID No.
02DZ4.3-TPH3	DC008-04
1S2836	DC001-02
1S2836-T1	DC001-02
1SS123-T1	DC001-01
1SS184	DC001-03
1SS193	DC001-06
1SS193-TE85L	DC001-06
1SS226	DC001-01
1SS300-TE85L	DC001-02
1SS301-TE85L	DC001-03
1SS302	DC001-01
1SS302-TE85L	DC001-01
1SS362-TE85L	DC001-01
1SS372-TE85L	DC001-01
1SS400TE-61	DC008-02
1SS400TE61	DC008-02
1SV160	DC001-14
1SV160-TE85L	DC001-14
DA204U	DC001-01
DA204UT106	DC001-01
DAP222	DC001-02
DAP222-TL	DC001-02
ERB44-08	DA001-01
KV1470(5MA)	DC001-13
KV1470TL00	DC001-13
MA133	DC001-01
MA133-TX	DC001-01
MA143A-(TX).SO	DC001-01
MBRS130LT3	DC013-01
RB051L-40	DC007-01

DIODE	Page or ID No.
RB051L-40TE25	DC007-01
RB160L-40TE25	DC007-01
RB400D	DC001-06
RB400D-T146	DC001-06
RB411D(RECTI)	DC001-06
RB411D-T146	DC001-06
RB706F-40	DC001-01
RD3.3M-B	DC001-04
RD3.3M-T1B	DC001-04
RU3AM	DA001-01
SB007-03CP	DC001-06
SB007-03CP-TB	DC001-06
SB007T03Q	DC001-01
SB007T03Q-TL	DC001-01
SB05-05CP	DC001-06
SB05-05CP-TB	DC001-06
SB20-03P	DC002-03
SB20-03P-TD	DC002-03

LED	Page or ID No.
CL-150D-CD	LC001-01
CL-150D-CD-T	LC001-01
CL-191HR-CD-T	LC004-02
CL-191YG-CD-T	LC004-01
GL480	LR089-01
SLR-342MG	LR014-02
TLY-256	LR020-01
TLY255A	LR013-01
TLY256	LR020-01

TRANSISTOR	Page or ID No.
2SA1156-2K	TM006-01
2SA1156-2L	TM006-01
2SA1213Y-TE12L	TC002-01
2SA1330-06	TC001-01
2SA1330-T1O6	TC001-01
2SA1413-L	TR031-02
2SA1576A-T106-Q	TC001-01
2SA1576A-T106-QR	TC001-01
2SA1610-Y33	TC001-01
2SA1610-T1Y33	TC001-01
2SA1611-M5M6	TC001-01
2SA1611T1-M5M6	TC001-01
2SA1774R	TC001-01
2SA1774TL-QR	TC001-01
2SB1114-T1ZL	TC002-01
2SB1115A	TC002-01
2SB1132-P	TC002-01
2SB1132-T100-QR	TC002-01
2SB1132-T101-QR	TC002-01
2SB1440S-TX	TC002-01
2SB624-BV5	TC001-01
2SB624-T1BV5	TC001-01
2SC1623	TC001-02
2SC1623-T1-L5L6	TC001-02
2SC2873Y-TE12L	TC002-02
2SC2873Y-TE12R	TC002-02
2SC3356-K	TC001-02
2SC3356-T1K	TC001-02
2SC3360	TC001-02
2SC3360-T1N16	TC001-02
2SC3518-ZL-E2	TR031-01
2SC3518L	TR031-01
2SC3632-K	TR031-01
2SC3735-L-B35	TC001-02
2SC3735-T1B-B35	TC001-02
2SC4176-B34	TC001-02
2SC4176T1B33B34B35	TC001-02
2SC4177	TC001-02
2SC4177-T1L5L6	TC001-02
2SC4178-F13F14-T1	TC001-02
2SC4178-F14	TC001-02
2SC4213-AB-TE85L	TC001-02
2SC4213-B	TC001-02
2SC4213B-TE85L	TC001-02
2SC4617R	TC001-02
2SC4617TL-QR	TC001-02
2SC5084-0(TE85L)	TC001-02
2SD1622	TC002-02
2SD1622-T-TD	TC002-02
2SD596-DV5	TC001-02
2SD596-T1DV5	TC001-02
2SD596DV345	TC001-02
2SD596T1-DV345	TC001-02
2SJ106-BL	TC001-06
2SJ106BL	TC001-06
2SJ106BL-TE85L	TC001-06
2SJ187	TC002-06
2SJ187-TD	TC002-06
2SK208-Y	TC001-05

TRANSISTOR	Page or ID No.
2SK208Y-TE85L	TC001-05
2SK209-G	TC001-05
2SK209G-TE85L	TC001-05
2SK711-BL	TC001-05
2SK711-BL/V-TE85L	TC001-05
2SK853-K5	TC001-05
2SK853-T1K5	TC001-05
DTA123JE	TC001-04
DTA123JE-TL	TC001-04
DTA123JUA-T106	TC001-04
DTA144EE	TC001-04
DTA144EE-TL	TC001-04
DTA144EKA-T146	TC001-04
DTA144EUA-T106	TC001-04
DTC114EUA-T106	TC001-03
DTC114TKA-T146	TC001-03
DTC114YUA-T106	TC001-03
DTC123JUA-T106	TC001-03
DTC143EUA-T106	TC001-03
DTC144EE	TC001-03
DTC144EE-TL	TC001-03
DTC144EUA-T106	TC001-03
DTC363EKT146	TC001-03
FMS2A-T148	TC008-07
FMY3A-T148	TC008-05
IMX1	TC005-01
IMX1T110	TC005-01
IMZ1	TC005-04
IMZ1T109	TC005-04
PT480	TR037-02
SI2301DS-T1	TC001-20
SI2304DS-T1	TC001-07
SI4416DY-T1	TC012-06
SI4420DY-T1	TC012-06
SI4425DY-T1	TC012-04
SI4431DY-T1	TC012-04
SI4953DY-T1	TC012-02
SI9435DY-T1	TC012-04
SI9936DY	TC012-01
SI9936DY-T1	TC012-01

IC	Page or ID No.
74LCX16374MTDX	SN74ABT16374DL
74VHC00MTCX	TC74HC00P
74VHC04MTCX	TC74HC04P
74VHC08MTCX	TC74HC08P
74VHC138MTCX	TC74HC138P
74VHC157MTCX	TC74HC157P
74VHC221AMTCX	TC74HC221P
74VHC32MTCX	TC74HC32P
74VHC74MTCX	TC74HC74P

IC	Page or ID No.
74VHCT08AMTCX	TC74HC08P
74VHCT245AMTCX	TC74HC245P
88E1011-BAB	2-6
AD1895AYRSRL	2-8
AD1896YRSRL	2-8
AD7524JR	AD7524JN
AD7524JR-REEL	AD7524JN
AD8055ART-REEL7	AD8055ART-REEL7
AD8056ARM-REEL7	RC4558
AK5392-VS-E2	AK5392-VS-E2
AK6420AM(E2)	AK6420AM-E2
AK6420AM-E2	AK6420AM-E2
AK6480AM-E2	AK6480AM-E2
AL422B-TEL	AL422B-TEL
AM26LV32CNSR	AM26LS32PC
AN3920S	AN3920K
AN3920S-E2	AN3920K
AN3922NS	AN3922NK
AN3922NS-E2	AN3922NK
BA033FP	L78M05T-FA
BA033FP-E2	L78M05T-FA
BA05FP	L78M05T-FA
BA05FP-E2	L78M05T-FA
BA18BC0FP-E2	BA18BC0FP-E2
BU2500FV-E2	M62352P
BX-3914	BX3914
BX-3914(HYBRID)	BX3914
CDC2510CPWR	CDC2510CPWR
CDCVF2505PWR	2-8
CX20099	CX20099
CX20099-T6	CX20099
CXA1370Q	CXA1370Q
CXA1450M-TH	CXA1450M
CXA1451M	CXA1451M
CXA1451M-TH	CXA1451M
CXA1479Q	CXA1479Q
CXA3053R	CXA3053R
CXA3513R	CXA3513R
CXA3550R	CXA3550R
CXA8103M-TLM	CXA8103M-TLM
CXB1341R	CXB1341R
CXB1345N-T4	CXB1345N-T4
CXD101-106Q	CXD101-106Q
CXD102-128Q	CXD102-128Q
CXD104-114Q	CXD104-114Q
CXD1095BR	CXD1095AR
CXD1171M	CXD1171M
CXD1171M-TH	CXD1171M
CXD1175AM-TH	CXD1175P
CXD206-104Q	CXD206-104Q
CXD2209Q	CXD2209Q
CXD2221Q	CXD2221Q
CXD2308Q	CXD2308Q
CXD2310AR	CXD2310R
CXD2310AR-T4	CXD2310R
CXD2315Q	CXD2306Q

IC	Page or ID No.
CXD303-101Q	CXD303-101Q
CXD8395AQ	CXD8395Q
CXD8807BR	CXD8807AR
CXD8935BQ	CXD8160Q
CXD8945BR	CXD8945BR
CXD9012BR	CXD9012R
CXD9017BR	CXD9017BR
CXD9018BR	CXD9018BR
CXD9068CR	CXD9068AR
CXD9079AGB	CXD9079GB
CXD9080AGB	CXD9080GB
CXD9092AGB	CXD9092GB
CXD9094AR	CXD9094AR
CXD9096R	CXD9096R
CXD9097AR	CXD9097AR
CXD9100AR	CXD9100R
CXD9102AR	CXD9102AR
CXD9107R	CXD9107R
CXD9116GB	CXD9116GB
CXD9121AGB	CXD9121AGB
CXD9130GB	CXD9130GB
CXD9137R	CXD9137R
CXD9140BGF	CXD9140GF
CXD9144R	CXD9000CR
CXD9147GF	CXD9147GF
CXD9148GG	CXD9148GG
CXD9149GF	CXD9149GF
CXD9150GF	CXD9150GF
CXD9167AGG	CXD9143GG
CXK1206AM	CXK1206M
CXK48324R	CXK48323R
CXK48324R-T6	CXK48323R
CXP87860-064Q	CXP87860-064Q
CY7C1049BV33-15VC-T2	UPD434008LE-20
CY7C1049CV33-15VCT	UPD434008LE-20
DS3691MX	DS3691M
DSPB56362PV100-1J21D	XCB56362PV100
EPC2LC20	EPC2LC20
EPC2LC20-TP	EPC2LC20
EPF10K30ATC144-3(03)	EPF10K20TC144-3
EPFFC484AC	EPFFC484AA
FM24C16ULEM8X	NM24C16ULEM8X
GS1504-CTD	GS1504-CTD
GS1522-CQR	GS1522-CQR
HD64F3437TFLH16	HD64F3434-F16
HJ945010SBP	2-10
HY57V281620HCT-H-TR	HY57V281620AT-P
HY57V561620BT-HDR	2-8
HY57V641620HGT-P-TR	TC59S6416BFTL-10
HY57V643220CT-7TR	MB811643242A-100FN
ISPLSI2192VE-100LT128	ISPLSI2192VE-100LT128
KM416V1204CT-L6	KM416V1204CT-L6

ndex

IC	Page or ID No.
LA7205M-TLM-E	LA7205M
LB1721M-TR	LB1721M
LM1881M	LM1881N
LM1881MX	LM1881N
LM2940CSX-5.0	LM2940CS
LM2940SX-5.0	UA7805UC
LM2990SX-5.0	UA7905UC
LM311PS(E20)	LM311P
LM311PSR	LM311P
LM339NS	LM339
LM339NS-E20	LM339
LM393PS	UA393DC
LM393PS-E20	UA393DC
LP2986AIMM-3.3	2-9
LT1085CM-TR	LT1085CM-TR
LT1107CS8-E1	2-9
LT1107CS8-E2	2-9
LTC1458CG-E2	LTC1458CG-E2
LTC1628CG	LTC1628CG
M48T58Y-70MH1TRS	M48T18-100MH1TR
M62352AGP-D60Q	M62352P
M62371GP-600D	M62371GP-600D
MB3759PF	TL494CN
MB3759PF-ER	TL494CN
MB3761PF-ER	MB3761PF
MB86189PFV-G-BND-ER	MB86189PFV-G-BND-ER
MB88346BPFV	MB88346APF
MB88346BPFV-EF	MB88346APF
MB90096PF-G-139-BND(ER)	MB90096PF-G-139-BND-ER
MB90096PF-G-139-BND-ER	MB90096PF-G-139-BND-ER
MBM29F040C-90PD-SFK	AM29F040-90JC
MBM29LV160BE-90TN	MBM29LV160B-90PTFN
MC100LVEL91DWR2	MC100LVEL91DWR2
MC10EL16DR2	MC10EL16DR2
MC14066BF	CD4066AE
MC14066BFEL	CD4066AE
MC74HC4053AFEL	MC74HC4053F
MD3303BP100	2-12
MD36053X-30	MD36053X-30
MS81V04160-25TB	2-9
MS81V04160A-25TB	2-9
MSM514221B-30JS	MSM514222B-30JS
MSM51V18165F-60TSK-7	KM416V1204CT-L6
MSM56V16800F-10TS-K	UPD4516821G5-A12-7JF
NJM062V(TE2)	RC4558
NJM062V-TE2	RC4558
NJM082M	RC4558
NJM2903M	UA393DC
NJM2903M-TE2	UA393DC
NJM2903V(TE2)	UA393DC
NJM2904V(TE2)	RC4558
NJM360M	LM360N
NJM360M-TE2	LM360N
NJM4556AM	RC4558
NJM4556AM-A-TE2	RC4558
NJM4558V(TE2)	RC4558
NJM4558V-TE2	RC4558

IC	Page or ID No.
NJM4560M-D(TE2)	RC4558
NJM4565M-A	RC4558
NJM4565M-A(TE2)	RC4558
NJM4580E-D	RC4558
NJM4580E-D-TE2	RC4558
NJM4580V(TE2)	RC4558
NJM4580VTE2	RC4558
NJM5534M	NJM5534M
NJM5534M(TE2)	NJM5534M
NJM78L15A-T3	UA78L05AWC
NJM78M05DL1A-TE1	NJM78M12DLA_TE1
NJM78M12DL1A-TE1	NJM78M12DLA_TE1
NJM79M05DL1A(TE2)	NJM79M12DLA_TE1
NJM79M12DL1A-TE1	NJM79M12DLA_TE1
NJU7062M(TE2)	RC4558
NJU7211U40(TE1)	S-80250AG-GB
PQ05SZ1U	PQ05SZ11
PQ05SZ5U	PQ05SZ11
PST592JMT	2-9
RH5RL50AA-T1	NJU7201U50
RN5RF50AA-TR	RN5RF33A-TR
S-80821ANUP-EDJ-T2	S-8054HN-CB
S-80827ANUP-EDQ-T2	S-8054HN-CB
S-80840ANUP-ED4-T2	S-8054HN-CB
S-80845ALUP-EA9-T2	S-80845ALUP-EA9-T2
SBX1645-01	SBX1645-01
SBX1645-01(HYBRID)	SBX1645-01
SI-3018LSA-TL	SI-3018LS-TL
SI-3025LSA-TL	SI-3018LS-TL
SM5847AF	SM5847AF
SM5865CM-E2	SM5865CM-E2
SN65LVDS31DR	DS26C31CM
SN65LVDS32DR	DS26C32ACN
SN65LVDS389DBTR	SN65LVDS389DBTR
SN65LVDT388DBTR	SN65LVDT388DBTR
SN74AHCT125PWR	MC74HC125N
SN74ALVC245PWR	SN74LVTH245APW-E05
SN74CBTLV1G125DCKR	SN74CBT1G125DCKR
SN74CBTLV3245APWR	SN74CBTLV3245PW-E05
SN74CBTLV3257PWR	SN74CBTLV3257PWR
SN74LS221DBR	SN74221N
SN74LV04APWR	TC74HC04P
SN74LV125APWR	MC74HC125N
SN74LV245APWR	TC74HC245P
SN74LVC04APWR	TC74HC04P
SN74LVC08APWR	TC74HC08P
SN74LVC125APWR-12	MC74HC125N
SN74LVC157APWR	TC74HC157P
SN74LVC157APWR-12	TC74HC157P
SN74LVC16244ADGGR	IDT74FCT16244ATPV
SN74LVC240APWR	TC74HC240P
SN74LVC245APW(E20)	TC74HC245P
SN74LVC245APWR	TC74HC245P
SN74LVC540APWR	SN74LS540N
SN74LVC574APWR	TC74HC574P
SN74LVC74APWR-12	TC74HC74P

IC	Page or ID No.
SN74LVCC4245APWR	74LVX4245QSCX
SN75207BNSR	SN75207BN
SN75LV4737ADBR	SN75LV4737ADBR
TA7267BP	TA7267P
TC4049BF	CD4049AE
TC4049BF(EL,N)	CD4049AE
TC4053BF	MC74HC4053F
TC4053BF(EL,N)	MC74HC4053F
TC4S71F	TC7S32F
TC4S71F(TE85R)	TC7S32F
TC74HC4051AFT(EL)	MC74HC4051N
TC74HC4052AFT(EL)	MC74HC4052N
TC74HC4053AF(EL)	MC74HC4053F
TC74HC4053AFT(EL)	MC74HC4053F
TC74HC4066AFT(EL)	CD4066AE
TC74LCX04FT(EL)	TC74HC04P
TC74LCX125FT(EL)	MC74HC125N
TC74LCX240FT(EL)	TC74HC240P
TC74LCX245FT(EL)	TC74HC245P
TC74LCX541FT(EL)	MC74HC541N
TC74LCX574FT(EL)	TC74HC574P
TC74VHC00FT(EL)	TC74HC00P
TC74VHC02FT(EL)	TC74HC02P
TC74VHC04FT(EL)	TC74HC04P
TC74VHC08FT(EL)	TC74HC08P
TC74VHC123AFT(EL)	TC74HC123P
TC74VHC138FT(EL)	TC74HC138P
TC74VHC139FT(EL)	TC74HC139P
TC74VHC14FT(EL)	TC74HC14P
TC74VHC153FT(EL)	TC74HC153P
TC74VHC157FT(EL)	TC74HC157P
TC74VHC163FT(EL)	TC74HC163P
TC74VHC164FT(EL)	TC74HC164P
TC74VHC175FT(EL)	TC74HC175P
TC74VHC21FT(EL)	TC74HC21P
TC74VHC221AFT(EL)	TC74HC221P
TC74VHC244FT(EL)	TC74HC244P
TC74VHC245FT(EL)	TC74HC245P
TC74VHC32FT(EL)	TC74HC32P
TC74VHC393FT(EL)	TC74HC393P
TC74VHC4040FT(EL)	MC74HC4040N
TC74VHC540FT(EL)	MC74HC540N
TC74VHC541FT(EL)	MC74HC541N
TC74VHC574FT(EL)	TC74HC574P
TC74VHC74FT(EL)	TC74HC74P
TC74VHC86FT(EL)	TC74HC86P
TC74VHCT00AFT(EL)	TC74HC00P
TC74VHCT04AFT(EL)	TC74HC04P
TC74VHCT08AFT(EL)	TC74HC08P
TC74VHCT244AFT(EL)	TC74HC244P
TC74VHCT245AFT(EL)	TC74HC245P
TC74VHCT541AFT(EL)	MC74HC541N
TC74VHCT574AFT(EL)	TC74HC574P
TC7S66FU	SC14S66F
TC7S66FU(TE85R)	SC14S66F
TC7SET02FU(TE85R)	TC4S01F
TC7SET08F(TE85L)	TC7S08F
TC7SET08FU(TE85R)	TC7S08F
TC7SET32FU(TE85R)	TC7S32F
TC7SH00FU-TE85R	TC7S00F
TC7SH02FU	TC4S01F
TC7SH02FU-TE85R	TC4S01F
TC7SH04FU	TC7S04F
TC7SH04FU-TE85R	TC7S04F
TC7SH08FU(TE85R)	TC7S08F
TC7SH08FU-TE85R	TC7S08F
TC7SH14FU-TE85R	TC7S14FU
TC7SH32FU(TE85R)	TC7S32F
TC7SH32FU-TE85R	TC7S32F
TC7SH86FU(TE85R)	TC7S86FU
TC7SH86FU-TE85R	TC7S86FU
TC7SHU04FU-TE85R	TC7S04F
TC7SZ02FU(TE85R)	TC4S01F
TC7SZ04FU(TE85R)	TC7S04F
TC7SZ08FU(TE85R)	TC7S08F
TC7SZ125FU(TE85R)	NC7SZ125P5
TC7W02F	TC7W02F
TC7W02FU(TE12R)	TC7W02F
TC7W08FU	TC7W08F
TC7W08FU(TE12R)	TC7W08F
TC7W125FU-TE12R	TC7W125FU
TC7W14FU(TE12R)	TC7W14FU
TC7W32FU	TC7W32FU
TC7W32FU(TE12R)	TC7W32FU
TC7W53FU(TE12R)	TC4W53FU
TC7W66FU(TE12R)	TC4W66F
TC7WH04FU(TE12R)	TC7W04F
TC7WH74FU(TE12R)	TC7W74FU
THAT2181SB-TE2	THAT2181SB-TE2
THAT2181SC-TE2	THAT2181SB-TE2
TL082CPS-E20	RC4558
TL082CPWR	RC4558
TL084CPWR-12	XRA10324AF
TL1451ACNS	TL1451CNS
TL1451ACNSR	TL1451CNS
TL1451ACPWR-12	TL1451CNS
TL16C550CPT	TL16C550CPT
TL431CPK-E2	NJM431U
TL712CPS	TL712CP
TL712CPSR	TL712CP
TLC272CPWR	RC4558
TLC272CPWR-12	RC4558
TLC2932IPWR	TLC2932IPW
TLC2933IPWR-12	TLC2933IPWR
TLC549IPS	TLC548
TLC549IPSR	TLC548
TLV2231CDBVR	TA75S01F
TPS7101QDR	TPS7101QDR
TPS77601PWPR	2-13
UPA102G(E1)	UPA102G
UPA102G-E1	UPA102G
UPC1246G	UPC1246G
UPC1246G-E2	UPC1246G
UPC1663G	UPC1663C
UPC1663G-E2	UPC1663C
UPC29M05T-E2	TA78M09F

IC **Page or ID No.**

UPC358G2-E2 ..... RC4558
UPC4062G2 ..... RC4558
UPC4062G2-E2 ..... RC4558
UPC4570G2 ..... RC4558
UPC4570G2-E2 ..... RC4558
UPC812G2 ..... RC4558
UPC812G2-E2 ..... RC4558
UPD780058GC-284-8BT UPD78P058GC-3B9
UPD78F4046GC-3B9 ..... UPD78F4046GC-3B9

V6701 ..... LTC1628CG
VSC6511RC VSC7152RC

XC18V01PC20C XC18V512PC20C
XC18V02VQ44C XC18V02VQ44C
XC18V04VQ44C XC18V02VQ44C
XC2S150-5FG456C1 ..... XC2S150-5FG456CES
XC2S150-5PQ208C1 ..... XC2S150-5PQ208CES
XC2S200-5FG456C1 ..... XC2S150-5FG456CES
XC2S50-5PQ208C1 ..... XC2S150-5PQ208CES
XC2V6000-4FF1152C12 2-14
XC61CN1502NR 2-13
XC61CN2702MR 2-13
XC61CN2702NR 2-13
XC95144XL-10TQ100C XC95144-10TQ100C
XC9572-15TQ100C(M) XC9572-15TQ100C
XCS20XL-4VQ100C XCS20XL-4VQ100C

OTHERS **Page or ID No.**

GP1S54 ..... MR010-02

RPI-352 ..... MR010-07

THS124TE85R MA016-01

IC

88E1011-BAB (MARVELL)

ETHERNET TRANSCEIVER
—BOTTOM VIEW—

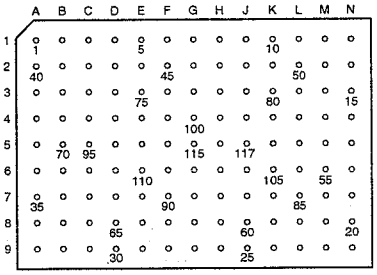

PIN NO.	OUTER NO.	I/O	SIGNAL	PIN NO.	OUTER NO.	I/O	SIGNAL	PIN NO.	OUTER NO.	I/O	SIGNAL
1	A1	I	COMA	40	A2	I	TX EN/TXD8/TX CTL/TD4 TD8	79	J3	—	D.Vcc
2	B1	—	A.Vcc	41	B2	I	TXD0/TD0	80	K3	—	D.Vcc
3	C1	I	S IN−	42	C2	O	S OUT−	81	L3	—	GND
4	D1	I	S IN+	43	D2	O	S OUT+	82	L4	—	GND
5	E1	I	TXD1/TD1	44	E2	O	CTRL15	83	L5	—	GND
6	F1	I	TXD2/TD2	45	F2	I	TXD3/TD3	84	L6	—	GND
7	G1	I	TXD4	46	G2	I	TXD5	85	L7	—	GND
8	H1	I	TXD6	47	H2	I	TXD7	86	K7	I	CONFIG6
9	J1	O	XTAL2	48	J2	I	XTAL1	87	J7	I	CONFIG5
10	K1	I	TCK	49	K2	I	$\overline{\text{RESET}}$	88	H7	—	D.Vcc
11	L1	I	TMS	50	L2	—	A.Vcc	89	G7	—	D.Vcc
12	M1	I	$\overline{\text{TRST}}$	51	M2	I	RSET	90	F7	I	SEL 25V
13	N1	I/O	MDI0+	52	M3	—	A.Vcc	91	E7	—	D.Vcc
14	N2	I/O	MDI0−	53	M4	O	CTRL25	92	D7	—	D.Vcc
15	N3	I/O	MDI1+	54	M5	O	HSDAC+	93	C7	—	GND
16	N4	I/O	MDI1−	55	M6	O	HSDAC−	94	C6	—	D.Vcc
17	N5	—	A.Vcc	56	M7	—	A.Vcc	95	C5	—	D.Vcc
18	N6	I/O	MDI2+	57	M8	—	A.Vcc	96	C4	—	GND
19	N7	I/O	MDI2−	58	L8	O	TDO	97	D4	—	GND
20	N8	I/O	MDI3+	59	K8	I	CONFIG2	98	E4	—	GND
21	N9	I/O	MDI3−	60	J8	I	CONFIG0	99	F4	—	GND
22	M9	I	TDI	61	H8	O	LED RX	100	G4	—	GND
23	L9	I	CONFIG4	62	G8	O	LED LINK1000	101	H4	—	GND
24	K9	I	CONFIG3	63	F8	O	LED LINK10	102	J4	—	GND
25	J9	I	CONFIG1	64	E8	I	MDC/SCL	103	K4	—	GND
26	H9	O	LED TX	65	D8	O	125CLK	104	K5	—	GND
27	G9	O	LED DUPLEX	66	C8	O	RXD6	105	K6	—	GND
28	F9	O	LED LINK100	67	B8	O	RXD3/RD3	106	J6	—	GND
29	E9	O	$\overline{\text{INT}}$	68	B7	O	RXD1/RD1	107	H6	—	GND
30	D9	I/O	MDIO/SDA	69	B6	O	RX CLK/RCLK0/RXC	108	G6	—	GND
31	C9	O	RXD7	70	B5	O	RX ER/RXD9	109	F6	—	GND
32	B9	O	RXD5	71	B4	O	TX CLK/RCLK1	110	E6	—	GND
33	A9	O	RXD4	72	B3	I	GTX CLK/TBI TXCLK/TXC	111	D6	—	GND
34	A8	O	RXD2/RD2	73	C3	O	S CLK−	112	D5	—	GND
35	A7	O	RXD0/RD0	74	D3	O	S CLK+	113	E5	—	GND
36	A6	O	RX DV/RXD8/RX CTL/RD4 RD8	75	E3	—	D.Vcc	114	F5	—	GND
37	A5	O	COL	76	F3	—	D.Vcc	115	G5	—	GND
38	A4	O	CRS/COMMA	77	G3	—	D.Vcc	116	H5	—	GND
39	A3	I	TX ER/TXD9	78	H3	—	D.Vcc	117	J5	—	GND

INPUTS

COMA	: LOW POWER DOWN MODES
CONFIG0 - CONFIG6	: CONFIGURATION
GTX CLK	: GMII TRANSMIT CLOCK
MDC	: MANAGEMENT DATA CLOCK
$\overline{\text{RESET}}$	: HARDWARE RESET
RSET	: CONSTANT VOLTAGE REFERENCE
SCL	: BI-DIRECTIONAL DATA TRANSFER BUS SERIAL CLOCK LINE
S IN+, S IN–	: SGMII TRANSMIT DATA
SEL 25V	: OUTPUT CLAMPING VOLTAGE SELECTION
TBI TXCLK	: TBI TRANSMIT CLOCK
TCK, TDI, TMS, $\overline{\text{TRST}}$	: TEST
TD0 - TD3	: TRANSMIT DATA
TD4 TD9	: RTBI TRANSMIT DATA
TX CTL	: RGMII TRANSMIT CONTROL
TX EN	: GMII AND MII TRANSMIT ENABLE
TX ER	: GMII AND MII TRANSMIT ERROR
TXC	: RGMII TRANSMIT CLOCK
TXD0 - TXD7	: GMII AND MII TRANSMIT DATA/TBI TRANSMIT DATA
TXD8, TXD9	: TBI TRANSMIT DATA
XTAL1	: CRYSTAL OSCILLATOR

OUTPUTS

125CLK	: REFERENCE CLOCK (125 MHz)
COL	: GMII AND MII COLLISION
COMMA	: TBI VALID COMMA DETECT
CRS	: GMII AND MII CARRIER SENSE
CTRL15, CTRL25	: REGULATOR CONTROL
HSDAC+, HSDAC–	: TEST
$\overline{\text{INT}}$	: INTERRUPT
LED DUPLEX	: PARALLEL LED DUPLEX OR DUPLEX/COLLISION MODES
LED LINK10	: PARALLEL LED OUTPUT FOR 10BASE-T LINK OR SPEED
LED LINK100	: PARALLEL LED OUTPUT FOR 100BASE-TX LINK OR SPEED
LED LINK1000	: PARALLEL LED OUTPUT FOR 1000BASE-T LINK/SPEED OR LINK INDICATOR
LED RX	: PARALLEL LED RECEIVE ACTIVITY OR RECEIVE ACTIVITY/LINK MODES
LED TX	: PARALLEL LED TRANSMIT ACTIVITY OR RX/TX ACTIVITY/LINK MODES
RCLK0, RCLK1	: TBI RECEIVE CLOCK
RD0 - RD3	: RGMII/RTBI RECEIVE DATA
RD4 RD9	: RTBI RECEIVE DATA
RX CLK	: GMII AND MII RECEIVE CLOCK
RX CTL	: RGMII RECEIVE CONTROL
RX DV	: GMII AND MII RECEIVE DATA
RX ER	: GMII AND MII RECEIVE ERROR
RXC	: RGMII/RTBI RECEIVE CLOCK
RXD0 - RXD7	: GMII AND MII RECEIVE DATA/TBI RECEIVE DATA
RXD8, RXD9	: TBI RECEIVE DATA
S CLK+, S CLK–	: SGMII RECEIVE CLOCK (62.5 MHz)
S OUT+, S OUT–	: SGMII RECEIVE DATA
TDO	: TEST
TX CLK	: MII TRANSMIT CLOCK
XTAL2	: CRYSTAL OSCILLATOR

INPUTS/OUTPUTS

MDI0+ - MDI3+, MDI0– - MDI3–	: MEDIA DEPENDENT INTERFACE
MDIO	: MANAGEMENT DATA
SDA	: BI-DIRECTIONAL DATA TRANSFER BUS SERIAL DATA LINE

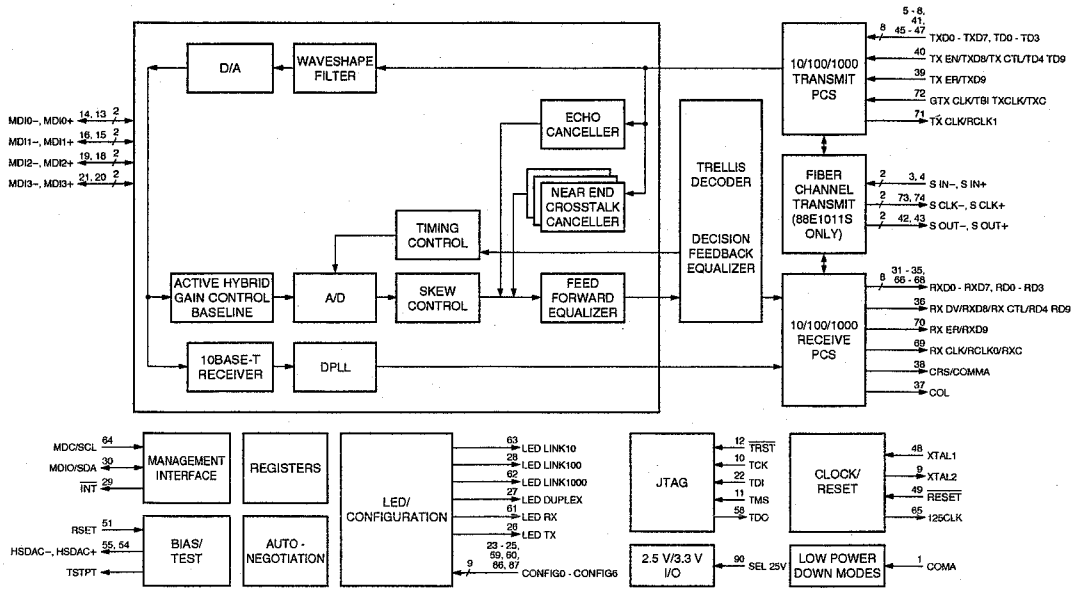

C

AD1895AYRSRL(AD)
AD1896YRSRL(AD)

192 kHz STEREO ASYNCHRONOUS SAMPLE RATE CONVERTER

—TOP VIEW—

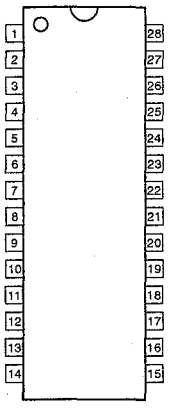

INPUTS

BYPASS	:	ASRC BYPASS MODE, ACTIVE HIGH
GRPDLYS	:	GROUP DELAY (H: SHORT, L: LONG)
MCLK IN	:	MASTER CLOCK OR CRYSTAL
MMODE 0 - 2	:	CONTROLLER/CONTROLLED CLOCK RATIO MODE SELECT
MUTE IN	:	MUTE
$\overline{RESET}$	:	*RESET*
SDATA I	:	INPUT SERIAL DATA (AT INPUT SAMPLE RATE)
SMODE IN 0 - 2	:	INPUT PORT SERIAL INTERFACE MODE SELECT
SMODE OUT 0, 1	:	OUTPUT PORT SERIAL INTERFACE MODE SELECT
TDM IN	:	SERIAL DATA INPUT (ONLY FOR DAISY CHAIN MODE)
WLNGTH OUT 0, 1	:	HARDWARE SELECTABLE OUTPUT WORDLENGTH SELECT

OUTPUTS

MCLK OUT	:	MASTER CLOCK OR CRYSTAL
MUTE OUT	:	OUTPUT MUTE CONTROL
SDATA O	:	OUTPUT SERIAL DATA

INPUTS/OUTPUTS

LRCLK I	:	CONTROLLER/CONTROLLED INPUT LEFT/RIGHT CLOCK
LRCLK O	:	CONTROLLER/CONTROLLED OUTPUT LEFT/RIGHT CLOCK
SCLK I	:	CONTROLLER/CONTROLLED INPUT SERIAL BIT CLOCK
SCLK O	:	CONTROLLER/CONTROLLED OUTPUT SERIAL BIT CLOCK

OTHER

NC	:	*NO CONNECTION*

PIN No.	I/O	SIGNAL	PIN No.	I/O	SIGNAL	PIN No.	I/O	SIGNAL	PIN No.	I/O	SIGNAL
1 *	I *	GRPDLYS *	8	—	D.GND	15	O	MUTE OUT	22	—	Vcc
2	I	MCLK IN	9	I	BYPASS	16	I	WLNGTH OUT 1	23	O	SDATA O
3	O	MCLK OUT	10	I	SMODE IN 0	17	I	WLNGTH OUT 0	24	I/O	LRCLK O
4	I	SDATA I	11	I	SMODE IN 1	18	I	SMODE OUT 1	25	I/O	SCLK O
5	I/O	SCLK I	12	I	SMODE IN 2	19	I	SMODE OUT 0	26	I	MMODE 0
6	I/O	LRCLK I	13	I	$\overline{RESET}$	20	I	TDM IN	27	I	MMODE 1
7	—	Vcc IO	14	I	MUTE IN	21	—	D.GND	28	I	MMODE 2

* : NOTE

PIN No.	TYPE	I/O	SIGNAL
1	AD1895	—	NC
	AD1896	I	GRPDLYS

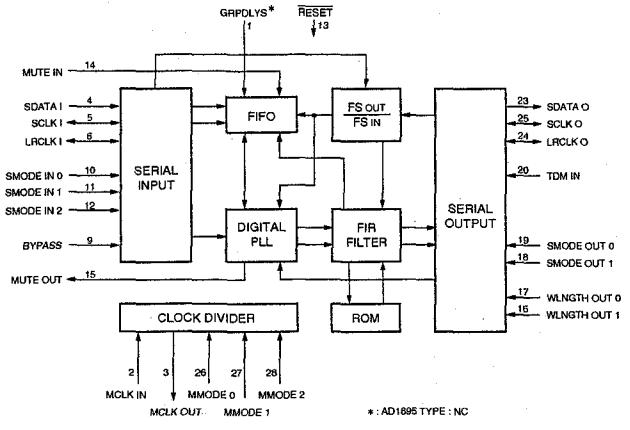

CDCVF2505PWR (TI)

PHASE-LOCK LOOP CLOCK DRIVER

—TOP VIEW—

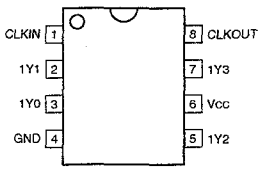

INPUT

CLKIN	:	CLOCK

OUTPUTS

CLKOUT	:	FEEDBACK
1Y0 - 1Y3	:	CLOCK

INPUT	OUTPUTS	
CLKIN	1Y (0 - 3)	CLKOUT
0	0	0
1	1	1
< 10 MHz	HI-Z	HI-Z

0 : LOW LEVEL
1 : *HIGH LEVEL*
HI-Z : HIGH IMPEDANCE

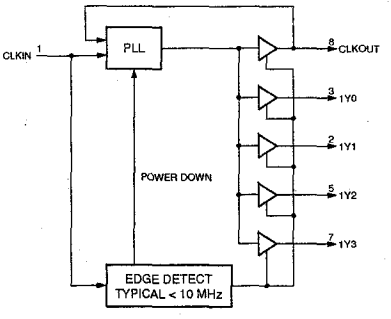

HY57V561620BT-HDR (HYNIX)

256M (4194304 × 16 × 4) -BIT SDRAM

—TOP VIEW—

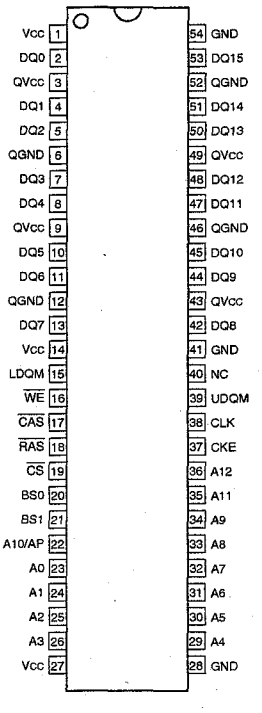

INPUTS

A0 - A12	:	ADDRESS
AP	:	AUTO PRECHARGE ENABLE
BS0, BS1	:	BANK SELECT
$\overline{CAS}$	:	*COLUMN ADDRESS STROBE*
CKE	:	CLOCK ENABLE
CLK	:	CLOCK
$\overline{CS}$	:	*CHIP SELECT*
LDQM	:	LOWER DQ MASK ENABLE
$\overline{RAS}$	:	ROW ADDRESS STROBE
UDQM	:	UPPER DQ MASK ENABLE
$\overline{WE}$	:	WRITE ENABLE

INPUTS/OUTPUTS

DQ0 - DQ15	:	DATA

OTHER

NC	:	NO CONNECTION

LP2986AIMM-3.3 (NS)

VOLTAGE REGULATOR
—TOP VIEW—

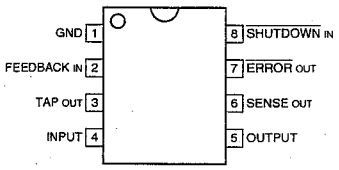

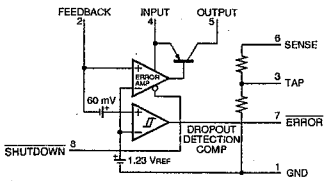

LT1107CS8-E1 (LINEAR TECH)
LT1107CS8-E2

DC/DC CONVERTER
—TOP VIEW—

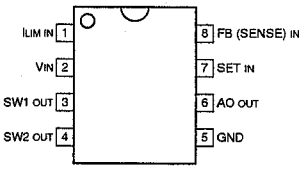

INPUTS
FB : FEEDBACK
ILIM : LOWER CURRENT LIMIT
SENSE : SENSE
SET : GAIN BLOCK
VIN : SUPPLY VOLTAGE

OUTPUTS
AO : AUXILIARY GAIN BLOCK
SW1 : COLLECTOR OF POWER TRANSISTOR
SW2 : EMITTER OF POWER TRANSISTOR

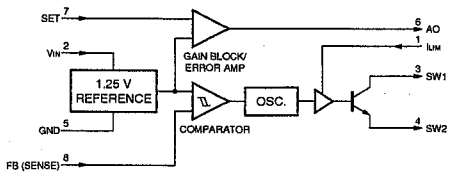

PST592JMT (MITSUMI)

SYSTEM RESET IC
—TOP VIEW—

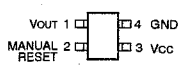

OUTPUT
VOUT : RESET SIGNAL OUTPUT

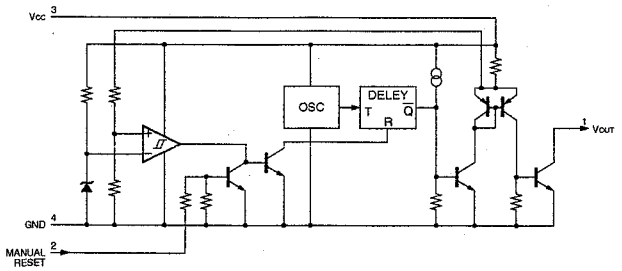

MS81V04160-25TB (OKI)
MS81V04160A-25TB (OKI)

16M (262214 × 8) -BIT DUAL FIFO MEMORY
—TOP VIEW—

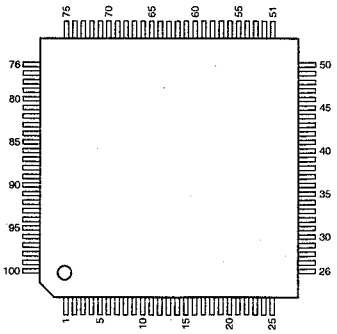

PIN NO.	I/O	SIGNAL	PIN NO.	I/O	SIGNAL	PIN NO.	I/O	SIGNAL	PIN NO.	I/O	SIGNAL
1	—	NC	26	—	NC	51	—	Vcc	76	—	NC
2	I	DI23	27	I	DI12	52	O	DO10	77	—	GND
3	—	GND	28	I	DI11	53	O	DO11	78	—	GND
4	I	DI24	29	I	DI10	54	—	GND	79	—	NC
5	I	DI25	30	I	RSTW1	55	O	DO12	80	I	OE2
6	I	DI26	31	I	IE1	56	O	DO13	81	I	RE2
7	I	DI27	32	I	WE1	57	O	DO14	82	I	RSTR2
8	—	NC	33	—	GND	58	O	DO15	83	—	Vcc
9	—	GND	34	—	Vcc	59	—	GND	84	—	NC
10	—	GND	35	—	GND	60	O	DO16	85	I	MODE1
11	—	Vcc	36	—	NC	61	O	DO17	86	—	NC
12	—	Vcc	37	—	Vcc	62	—	Vcc	87	—	GND
13	I	SWCK	38	—	NC	63	I	SRCK	88	—	NC
14	—	Vcc	39	—	GND	64	—	Vcc	89	—	Vcc
15	—	Vcc	40	—	NC	65	O	DO27	90	—	NC
16	—	GND	41	I	MODE2	66	O	DO26	91	—	GND
17	—	GND	42	I	MODE3	67	—	GND	92	—	Vcc
18	—	NC	43	—	Vcc	68	O	DO25	93	—	GND
19	I	DI17	44	I	RSTR1	69	O	DO24	94	I	WE2
20	I	DI16	45	I	RE1	70	O	DO23	95	I	IE2
21	I	DI15	46	I	OE1	71	O	DO22	96	I	RSTW2
22	I	DI14	47	—	NC	72	—	GND	97	I	DI20
23	—	GND	48	—	GND	73	O	DO21	98	I	DI21
24	I	DI13	49	—	GND	74	O	DO20	99	I	DI22
25	—	NC	50	—	NC	75	—	Vcc	100	—	NC

INPUTS
DI10 - DI17 : PORT1 DATA
DI20 - DI27 : PORT2 DATA
IE1 : PORT1 INPUT ENABLE
IE2 : PORT2 INPUT ENABLE
MODE1 - MODE3 : MODE SET
OE1 : PORT1 OUTPUT ENABLE
OE2 : PORT2 OUTPUT ENABLE
RE1 : PORT1 READ ENABLE
RE2 : PORT2 READ ENABLE
RSTR1 : PORT1 RESET READ
RSTR2 : PORT2 RESET READ
RSTW1 : PORT1 RESET WRITE
RSTW2 : PORT2 RESET WRITE
SRCK : SERIAL READ CLOCK
SWCK : SERIAL WRITE CLOCK
WE1 : PORT1 WRITE ENABLE
WE2 : PORT2 WRITE ENABLE

OUTPUTS
DO10 - DO17 : PORT1 DATA
DO20 - DO27 : PORT2 DATA

OTHER
NC : NO CONNECTION

HJ945010SBP (HITACHI)

MEDIA AND COMMUNICATION PROCESSOR

—BOTTOM VIEW—

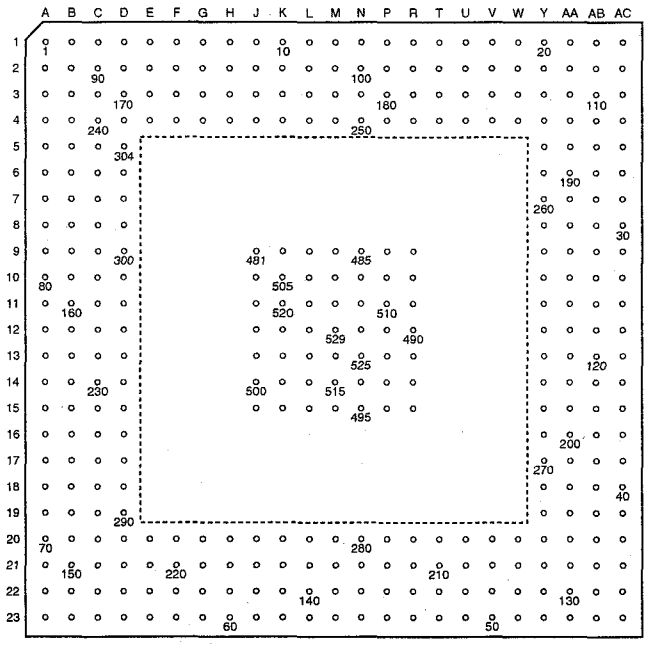

PIN NO.	OUTER NO.	I/O	SIGNAL	PIN NO.	OUTER NO.	I/O	SIGNAL	PIN NO.	OUTER NO.	I/O	SIGNAL
1	A1	I	EXTAL	60	H23	I/O	D49	119	AB12	O	CKIO2
2	B1	I	RESET	61	G23	I/O	D48	120	AB13	—	QVcc
3	C1	O	CS1	62	F23	O	RD/WR2	121	AB14	O	A5
4	D1	O	CS5	63	E23	I/O	MD0/SCK	122	AB15	O	A3
5	E1	O	BS	64	D23	I	IRL0	123	AB16	O	DRAK1
6	F1	I/O	D47	65	C23	I	IRL1	124	AB17	O	CS3
7	G1	I/O	D46	66	B23	I	IRL3	125	AB18	O	RAS
8	H1	I/O	D45	67	A23	I	NMI	126	AB19	O	RD/WR
9	J1	I/O	D44	68	A22	I	EXTAL2	127	AB20	O	WE3/CAS3/DQM3/ICIOWR
10	K1	I/O	D43	69	A21	—	Vcc1	128	AB21	O	WE7/CAS7/DQM7/REG
11	L1	I/O	D42	70	A20	—	RESERVED	129	AB22	I/O	D24
12	M1	I/O	D41	71	A19	I/O	TCLK	130	AA22	I	DREQ0
13	N1	I/O	D40	72	A18	I	SCK2/MRESET	131	Y22	I/O	D25
14	P1	I/O	D15	73	A17	O	A18	132	W22	I/O	D26
15	R1	I/O	D14	74	A16	O	A20	133	V22	I/O	D27
16	T1	I/O	D13	75	A15	O	A22	134	U22	I/O	D28
17	U1	I/O	D12	76	A14	O	A24	135	T22	I/O	D29
18	V1	I/O	D11	77	A13	I/O	MD3/CE2A	136	R22	I/O	D30
19	W1	I/O	D10	78	A12	I/O	MD4/CE2B	137	P22	I/O	D31
20	Y1	I/O	D9	79	A11	O	DACK0	138	N22	I/O	D56
21	AA1	O	BACK/BSREQ	80	A10	O	A0	139	M22	I/O	D57
22	AB1	I	BREQ/BSACK	81	A9	O	STATUS0	140	L22	I/O	D58
23	AC1	I/O	D8	82	A8	I	MD6/IOIS16	141	K22	I/O	D59
24	AC2	O	CKE	83	A7	O	TDO	142	J22	I/O	D60
25	AC3	O	WE5/CAS5/DQM5	84	A6	I	TCK	143	H22	I/O	D61
26	AC4	O	WE1/CAS1/DQM1	85	A5	I	TRST	144	G22	I/O	D62
27	AC5	O	A17	86	A4	—	Vcc2	145	F22	I/O	D63
28	AC6	O	A15	87	A3	—	Vcc3	146	E22	I/O	MD1/TXD2
29	AC7	O	A13	88	A2	O	XTAL	147	D22	I	MD2/RXD2
30	AC8	O	A11	89	B2	I	RDY	148	C22	I	IRL2
31	AC9	O	A9	90	C2	O	CS0	149	B22	O	XTAL2
32	AC10	O	A7	91	D2	O	CS4	150	B21	—	GND1
33	AC11	—	QGND	92	E2	O	CS6	151	B20	—	NC
34	AC12	O	CKIO	93	F2	O	RD2	152	B19	I/O	CTS2
35	AC13	—	QGND	94	G2	I/O	D32	153	B18	I/O	MD8/RTS2
36	AC14	O	A6	95	H2	I/O	D33	154	B17	I/O	MD7/TXD
37	AC15	O	A4	96	J2	I/O	D34	155	B16	O	A19
38	AC16	O	A2	97	K2	I/O	D35	156	B15	O	A21
39	AC17	O	DRAK0	98	L2	I/O	D36	157	B14	O	A23
40	AC18	O	CS2	99	M2	I/O	D37	158	B13	O	A25
41	AC19	O	RD/CASS/FRAME	100	N2	I/O	D38	159	B12	I/O	MD5/RAS2
42	AC20	O	WE2/CAS2/DQM2/ICIORD	101	P2	I/O	D39	160	B11	O	DACK1
43	AC21	O	WE6/CAS6/DQM6	102	R2	I/O	D0	161	B10	O	A1
44	AC22	I/O	D23	103	T2	I/O	D1	162	B9	O	STATUS1
45	AC23	I/O	D22	104	U2	I/O	D2	163	B8	I/O	ASEBRK/BRKACK
46	AB23	I	RXD	105	V2	I/O	D3	164	B7	I	TMS
47	AA23	I	DREQ1	106	W2	I/O	D4	165	B6	I	TDI
48	Y23	I/O	D21	107	Y2	I/O	D5	166	B5	I	CKIO2ENB
49	W23	I/O	D20	108	AA2	I/O	D6	167	B4	—	Vcc2
50	V23	I/O	D19	109	AB2	I/O	D7	168	B3	—	GND3
51	U23	I/O	D18	110	AB3	O	WE4/CAS4/DQM4	169	C3	—	QGND
52	T23	I/O	D17	111	AB4	O	WE0/CAS0/DQM0	170	D3	—	QVcc
53	R23	I/O	D16	112	AB5	—	QVcc	171	E3	—	QGND
54	P23	I/O	D55	113	AB6	O	A16	172	F3	—	QVcc
55	N23	I/O	D54	114	AB7	O	A14	173	G3	—	QGND
56	M23	I/O	D53	115	AB8	O	A12	174	H3	—	Vcc
57	L23	I/O	D52	116	AB9	O	A10	175	J3	—	QGND
58	K23	I/O	D51	117	AB10	O	A8	176	K3	—	QVcc
59	J23	I/O	D50	118	AB11	—	QVcc	177	L3	—	QGND

PIN NO.	OUTER NO.	I/O	SIGNAL	PIN NO.	OUTER NO.	I/O	SIGNAL	PIN NO.	OUTER NO.	I/O	SIGNAL
178	M3	—	QVcc	237	C7	—	GND2	296	D13	—	QVcc
179	N3	—	QGND	238	C6	—	QVcc	297	D12	—	QGND
180	P3	—	QVcc	239	C5	—	QGND	298	D11	—	QVcc
181	R3	—	QGND	240	C4	—	QVcc	299	D10	—	QGND
182	T3	—	Vcc	241	D4	—	QGND	300	D9	—	QVcc
183	U3	—	QGND	242	E4	—	QVcc	301	D8	—	GND
184	V3	—	QVcc	243	F4	—	QGND	302	D7	—	QVcc
185	W3	—	QGND	244	G4	—	QVcc	303	D6	—	GND2
186	Y3	—	QVcc	245	H4	—	GND	304	D5	—	QVcc
187	AA3	—	QGND	246	J4	—	QVcc	481	J9	—	QGND
188	AA4	—	QVcc	247	K4	—	QGND	482	K9	—	QGND
189	AA5	—	QGND	248	L4	—	QVcc	483	L9	—	QGND
190	AA6	—	QVcc	249	M4	—	QGND	484	M9	—	QGND
191	AA7	—	QGND	250	N4	—	QVcc	485	N9	—	QGND
192	AA8	—	Vcc	251	P4	—	QGND	486	P9	—	QGND
193	AA9	—	QGND	252	R4	—	QVcc	487	R9	—	QGND
194	AA10	—	QVcc	253	T4	—	GND	488	R10	—	QGND
195	AA11	—	QGND	254	U4	—	QVcc	489	R11	—	QGND
196	AA12	—	QVcc	255	V4	—	QGND	490	R12	—	QGND
197	AA13	—	QGND	256	W4	—	QVcc	491	R13	—	QGND
198	AA14	—	QVcc	257	Y4	—	QGND	492	R14	—	QGND
199	AA15	—	QGND	258	Y5	—	QVcc	493	R15	—	QGND
200	AA16	—	Vcc	259	Y6	—	QGND	494	P15	—	QGND
201	AA17	—	QGND	260	Y7	—	QVcc	495	N15	—	QGND
202	AA18	—	QVcc	261	Y8	—	GND	496	M15	—	QGND
203	AA19	—	QGND	262	Y9	—	QVcc	497	L15	—	QGND
204	AA20	—	QVcc	263	Y10	—	QGND	498	K15	—	QGND
205	AA21	—	QGND	264	Y11	—	QVcc	499	J15	—	QGND
206	Y21	—	QVcc	265	Y12	—	QGND	500	J14	—	QGND
207	W21	—	QGND	266	Y13	—	QVcc	501	J13	—	QGND
208	V21	—	QVcc	267	Y14	—	QGND	502	J12	—	QGND
209	U21	—	QGND	268	Y15	—	QVcc	503	J11	—	QGND
210	T21	—	Vcc	269	Y16	—	GND	504	J10	—	QGND
211	R21	—	QGND	270	Y17	—	QVcc	505	K10	—	QGND
212	P21	—	QVcc	271	Y18	—	QGND	506	L10	—	QGND
213	N21	—	QGND	272	Y19	—	QVcc	507	M10	—	QGND
214	M21	—	QVcc	273	Y20	—	QGND	508	N10	—	QGND
215	L21	—	QGND	274	W20	—	QVcc	509	P10	—	QGND
216	K21	—	QVcc	275	V20	—	QGND	510	P11	—	QGND
217	J21	—	QGND	276	U20	—	QVcc	511	P12	—	QGND
218	H21	—	Vcc	277	T20	—	GND	512	P13	—	QGND
219	G21	—	QGND	278	R20	—	QVcc	513	P14	—	QGND
220	F21	—	QVcc	279	P20	—	QGND	514	N14	—	QGND
221	E21	—	QGND	280	N20	—	QVcc	515	M14	—	QGND
222	D21	—	QVcc	281	M20	—	QGND	516	L14	—	QGND
223	C21	—	QGND	282	L20	—	QVcc	517	K14	—	QGND
224	C20	—	QVcc	283	K20	—	QGND	518	K13	—	QGND
225	C19	—	QGND	284	J20	—	QVcc	519	K12	—	QGND
226	C18	—	QVcc	285	H20	—	GND	520	K11	—	QGND
227	C17	—	QGND	286	G20	—	QVcc	521	L11	—	QGND
228	C16	—	Vcc	287	F20	—	QGND	522	M11	—	QGND
229	C15	—	QGND	288	E20	—	QVcc	523	N11	—	QGND
230	C14	—	QVcc	289	D20	—	QGND	524	N12	—	QGND
231	C13	—	QGND	290	D19	—	QVcc	525	N13	—	QGND
232	C12	—	QVcc	291	D18	—	QGND	526	M13	—	QGND
233	C11	—	QGND	292	D17	—	QVcc	527	L13	—	QGND
234	C10	—	QVcc	293	D16	—	GND	528	L12	—	QGND
235	C9	—	QGND	294	D15	—	QVcc	529	M12	—	QGND
236	C8	—	Vcc	295	D14	—	QGND				

INPUTS

$\overline{\text{BREQ}}$/$\overline{\text{BSACK}}$	: BUS REQUEST/BUS ACKNOWLEDGE
CKIO2ENB	: CKIO2, $\overline{\text{RD2}}$, RD/$\overline{\text{WR2}}$ ENABLE
$\overline{\text{DREQ0}}$, $\overline{\text{DREQ1}}$	: DMC REQUEST
EXTAL	: EXTERNAL CRYSTAL OSCILLATOR
EXTAL2	: EXTERNAL CRYSTAL OSCILLATOR FOR RTC
$\overline{\text{IRL0}}$ - $\overline{\text{IRL3}}$	: INTERRUPT
MD2/RXD2	: MODE/SCIF DATA
MD6/IOIS16	: MODE/IO DEVICE IS 16 BITS (PCMCIA)
NMI	: NON-MASKABLE INTERRUPT
$\overline{\text{RDY}}$	: BUSY READY
$\overline{\text{RESET}}$	: RESET
RXD	: SCIF DATA
SCK2/$\overline{\text{MRESET}}$	: SCIF CLOCK/MANUAL RESET
TCK, TDI, TMS, $\overline{\text{TRST}}$	: TEST

OUTPUTS

A0 - A25	: ADDRESS
$\overline{\text{BACK}}$/$\overline{\text{BSREQ}}$	: BUS ACKNOWLEDGE/BUS REQUEST
$\overline{\text{BS}}$	: BUS START
$\overline{\text{CAS0}}$ - $\overline{\text{CAS7}}$	: COLUMN ADDRESS STROBE
CKE	: CLOCK ENABLE
CKIO, CKIO2	: CLOCK
CS0 - CS6	: CHIP SELECT
DACK0, DACK1	: DMAC BUS ACKNOWLEDGE
DQM0 - DQM7	: MASK
DRAK0, DRAK1	: DMAC REQUEST ACKNOWLEDGE
$\overline{\text{RAS}}$	: ROW ADDRESS STROBE
$\overline{\text{RD}}$/$\overline{\text{CASS}}$/$\overline{\text{FRAM}}$, $\overline{\text{RD2}}$	: READ/COLUMN ADDRESS STROBE/FRAME
RD/$\overline{\text{WR}}$, RD/$\overline{\text{WR2}}$	: READ/WRITE
STATUS0, STATUS1	: STATUS
$\overline{\text{TDO}}$	: TEST
$\overline{\text{WE0}}$ - $\overline{\text{WE7}}$	: WRITE ENABLE
XTAL	: CRYSTAL OSCILLATOR
XTAL2	: CRYSTAL OSCILLATOR FOR RTC

INPUTS/OUTPUTS

$\overline{\text{ASEBRK}}$/$\overline{\text{BRKACK}}$	: PIN BREAK/ACKNOWLEDGE
$\overline{\text{CTS2}}$	: SCIF DATA CONTROL
D0 - D63	: DATA
MD0/SCK	: MODE/SCIF CLOCK
MD1/TXD2, MD7/TXD	: MODE/SCIF DATA
MD3/$\overline{\text{CE2A}}$, MD4/$\overline{\text{CE2B}}$	: MODE/PCMCIA CHIP ENABLE
MD5/$\overline{\text{RAS2}}$	: MODE/ROW ADDRESS STROBE (DRAM)
MD8/$\overline{\text{RTS2}}$	: MODE/SCIF DATA CONTROL (RTS)
TCLK	: RTC/TMU CLOCK

OTHERS

GND1	: GROUND FOR RTC
GND2	: GROUND FOR PLL
GND3	: GROUND FOR CPG
NC	: NO CONNECTION
Vcc1	: POWER SUPPLY FOR RTC
Vcc2	: POWER SUPPLY FOR PLL
Vcc3	: POWER SUPPLY FOR CPG

MD3303BP100 (HITACHI)

PCI BUS BRIDGE
—BOTTOM VIEW—

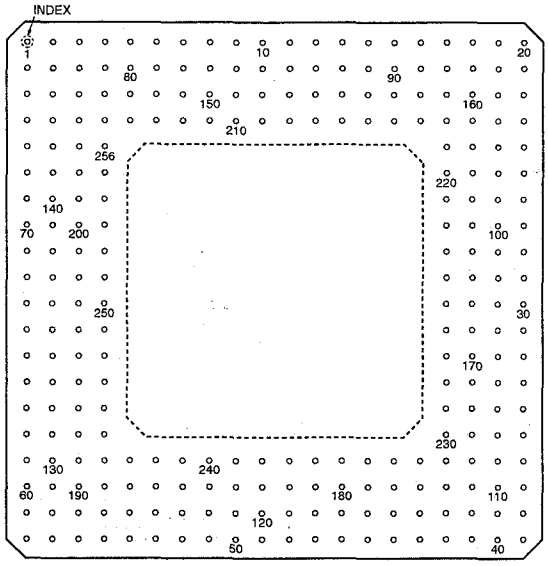

PIN NO.	I/O	SIGNAL	PIN NO.	I/O	SIGNAL	PIN NO.	I/O	SIGNAL	PIN NO.	I/O	SIGNAL
1	I/O	PAD5	65	I/O	PAD23	129	I	PREQ3	193	–	GND
2	I/O	PAD4	66	I/O	PAD20	130	I/O	PAD29	194	–	Vcc
3	I/O	PAD1	67	I/O	PAD19	131	I/O	PAD26	195	I/O	PIDSEL0
4	I/O	MDP3	68	I/O	PAD16	132	I/O	PAD24	196	I/O	PAD21
5	I/O	MDT28	69	I/O	PFRAME	133	O	PIDSEL3	197	–	GND
6	I/O	MDT26	70	I	HRASL0	134	–	GND	198	–	Vcc
7	I/O	MDT24	71	I/O	PSERR	135	–	GND	199	I/O	PTRDY
8	I/O	MDT21	72	I/O	PCBE1	136	I/O	PAD17	200	I/O	PSTOP
9	I/O	MDT18	73	I/O	PAD14	137	I/O	PCBE2	201	–	Vcc
10	I/O	MDT17	74	I/O	PAD11	138	I/O	PIRDY	202	–	GND
11	O	MWE	75	I/O	PAD9	139	I	HRASL1	203	–	GND
12	O	MDQM3	76	I/O	PAD7	140	I/O	PPAR	204	I/O	PAD8
13	O	MADR11	77	I/O	PAD6	141	I/O	PAD15	205	–	GND
14	O	MADR8	78	I/O	PAD3	142	I/O	PAD13	206	–	GND
15	O	MADR6	79	I/O	PAD0	143	I/O	PAD10	207	I/O	MDT31
16	O	MADR4	80	I/O	MDT30	144	I/O	PCBE0	208	–	GND
17	O	MADR1	81	I/O	MDT27	145	–	Vcc	209	I/O	MDP2
18	O	MBKADR0	82	I/O	MDT25	146	I/O	PAD2	210	I/O	MDT20
19	O	MDQM1	83	I/O	MDT22	147	–	GND	211	I/O	MDT16
20	O	MCAS	84	I/O	MDT19	148	I/O	MDT29	212	–	GND
21	O	MRAS	85	O	MCS1	149	–	Vcc	213	–	GND
22	I/O	MDT14	86	O	MCS0	150	I/O	MDT23	214	–	GND
23	I/O	MDT12	87	O	MDQM2	151	–	GND	215	–	GND
24	I/O	MDT8	88	O	MADR10	152	–	NC	216	O	MADR2
25	I/O	MDT7	89	O	MADR7	153	–	Vcc	217	–	NC
26	I/O	MDT5	90	O	MADR5	154	O	MADR12	218	–	GND
27	I/O	MDT1	91	–	GND	155	O	MADR9	219	–	NC
28	I/O	LDT6	92	O	MBKADR1	156	–	Vcc	220	I/O	MDT11
29	I/O	LDT5	93	–	NC	157	O	MADR3	221	–	GND
30	I/O	LDT1	94	O	MDQM0	158	O	MADR0	222	I/O	MDT4
31	O	LCSLM0	95	I/O	MDP1	159	–	GND	223	I/O	MDT0
32	O	HIRL3	96	I/O	MDT13	160	–	Vcc	224	I/O	LDT4
33	I/O	HDT31	97	I/O	MDT10	161	I/O	MDT15	225	–	GND
34	I/O	HDT30	98	I/O	MDP0	162	–	GND	226	O	HNMI
35	I/O	HDT29	99	I/O	MDT6	163	I/O	MDT9	227	O	HIRL0
36	I/O	HDT27	100	I/O	MDT2	164	–	Vcc	228	–	GND
37	I/O	HDT26	101	I/O	LDT7	165	I/O	MDT3	229	I/O	HDT19
38	I/O	HDT24	102	I/O	LDT2	166	–	GND	230	I/O	HDT25
39	I	HINTEX0	103	I/O	LDT0	167	I/O	LDT3	231	–	GND
40	I	HINTEX1	104	O	LCSLM1	168	–	Vcc	232	I	HINTEX3
41	I/O	HRESET	105	O	HIRL2	169	–	NC	233	I	HRDWT
42	I	HMPXSZ2	106	I/O	HDT16	170	O	HIRL1	234	–	GND
43	I	PCKSEL	107	I/O	HDT17	171	–	Vcc	235	I	HCSPC
44	I	HCLK	108	I/O	HDT28	172	I/O	HDT18	236	I	HLWE
45	I	HCSSD	109	–	GND	173	I/O	HDT20	237	I/O	HDT6
46	I	HBS	110	I/O	HDT22	174	I/O	HDT21	238	–	GND
47	I/O	HDT7	111	I/O	HDT23	175	–	Vcc	239	I/O	HDT2
48	I/O	HDT8	112	I	HINTEX2	176	I	HBMD	240	I/O	HDT0
49	I/O	HDT10	113	I	HMPXSZ0	177	I	HMPXSZ1	241	–	GND
50	I/O	HDT11	114	I	HFRAME	178	I	HCSMSEL	242	I/O	PINTA
51	I/O	HDT13	115	I	PCLKEX	179	–	Vcc	243	I/O	PREQ0
52	I/O	HDT15	116	I	HCSMEM	180	I	HCSRG	244	–	GND
53	O	PCLK3	117	I	HCMCS	181	I	HLOE	245	–	GND
54	O	PCLK1	118	–	GND	182	I/O	HDT9	246	I/O	PAD27
55	I/O	PINTB	119	I/O	HDT5	183	–	Vcc	247	–	GND
56	I/O	PRST	120	I/O	HDT4	184	I/O	HDT12	248	O	PIDSEL1
57	I	PREQ1	121	I/O	HDT3	185	I/O	HDT14	249	I/O	PAD22
58	I	PREQ2	122	I/O	HDT1	186	–	Vcc	250	I/O	PAD18
59	O	PGNT3	123	O	HRDY	187	O	PCLK0	251	–	GND
60	I/O	PAD30	124	O	PCLK2	188	I	PINTC	252	I/O	PDEVSEL
61	I/O	PAD28	125	–	GND	189	I/O	PGNT0	253	I/O	PPERR
62	I/O	PAD25	126	I	PINTD	190	–	Vcc	254	–	GND
63	I/O	PCBE3	127	O	PGNT1	191	I/O	PAD31	255	I/O	PAD12
64	O	PIDSEL2	128	O	PGNT2	192	–	GND	256	–	GND

INPUTS

HBMD	: HOST BRIDGE MODE SELECT
HBS	: BUS START
HCLK	: BUS CLOCK
HCMCS	: COMMON MODE CHIP SELECT
HCSMEM	: CHIP SELECT OF LOW SPEED MEMORY
HCSMSEL	: CHIP SELECT OUTPUT SELECTION SIGNAL TO LOW SPEED MEMORY
HCSPC	: CHIP SELECT FOR PCI DEVICE
HCSRG	: CHIP SELECT FOR INTERNAL RESISTOR
HCSSD	: CHIP SELECT FOR SDRAM
HFRAME	: BUS CYCLE FRAME
HINTEX0 - HINTEX3	: EXTERNAL INTERRUPT
HLOE	: LOW SPEED MEMORY ACCESS OUTPUT ENABLE
HLWE	: LOW SPEED MEMORY ACCESS WRITE ENABLE
HMPXSZ0 - HMPXSZ2	: MPX INTERFACE ACCESS SIZE
HRASL0, HRASL1	: RESISTOR ADDRESS OFFSET SELECT
HRDWT	: BUS READ/WRITE
PCKSEL	: PCI BUS CLOCK SELECT
PCLKEX	: PCI EXTERNAL CLOCK
PINTC, PINTD	: PCI BUS INTERRUPT
PREQ1 - PREQ3	: PCI BUS REQUEST

OUTPUTS

HIRL0 - HIRL3	: INTERRUPT
HNMI	: NON-MASKABLE INTERRUPT
HRDY	: BUS READY
LCSLM0, LCSLM1	: CHIP SELECT FOR LOW SPEED MEMORY
MADR0 - MADR12	: SDRAM ADDRESS
MBKADR0, MBKADR1	: SDRAM BANK ADDRESS
MCAS	: SDRAM COLUMN ADDRESS STROBE
MCS0, MCS1	: SDRAM ACCESS CHIP SELECT
MDQM0 - MDQM3	: SDRAM ACCESS BYTE ENABLE
MRAS	: SDRAM ROW ADDRESS STROBE
MWE	: SDRAM WRITE ENABLE
PCLK0 - PCLK3	: PCI BUS CLOCK
PGNT1 - PGNT3	: PCI BUS GRANT
PIDSEL1 - PIDSEL3	: PCI BUS INITIALIZATION DEVICE SELECT

INPUTS/OUTPUTS

HDT0 - HDT31	: DATA BUS
HRESET	: HARD RESET
LDT0 - LDT7	: DATA BUS FOR LOW SPEED MEMORY
MDP0 - MDP3	: SDRAM DATA PARITY
MDT0 - MDT31	: SDRAM DATA BUS
PAD0 - PAD31	: PCI ADDRESS DATA BUS
PCBE0 - PCBE3	: PCI BUS COMMAND AND BYTE ENABLE
PDEVSEL	: PCI BUS DEVICE SELECT
PFRAME	: PCI BUS FRAME
PGNT0	: PCI BUS GRANT
PIDSEL0	: PCI BUS INITIALIZATION DEVICE SELECT
PINTA, PINTB	: PCI BUS INTERRUPT
PIRDY	: PCI BUS INITIATOR READY
PPAR	: PCI BUS EVEN PARITY
PPERR	: PCI BUS PARITY ERROR
PREQ0	: PCI BUS REQUEST
PRST	: PCI BUS RESET
PSERR	: PCI BUS SYSTEM ERROR
PSTOP	: PCI BUS STOP
PTRDY	: PCI BUS TARGET READY

OTHER

NC	: NO CONNECTION

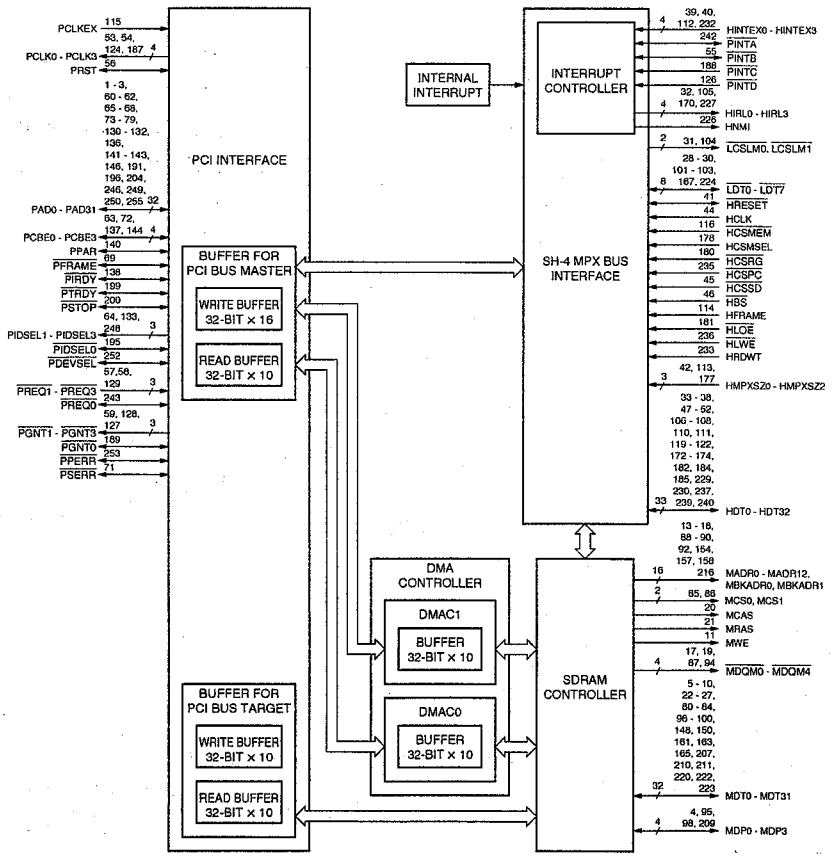

TPS77601PWPR (TI)

LOW DROPOUT SERIES REGURATOR

—TOP VIEW—

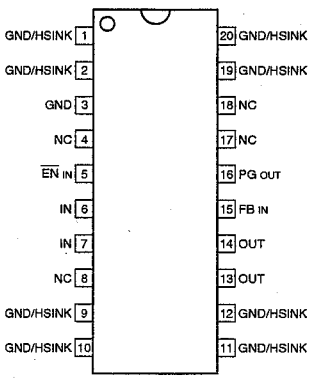

INPUTS

EN : ENABLE
FB : FEEDBACK
IN : INPUT VOLTAGE

OUPUTS

OUT : REGULATED OUTPUT VOLTAGE
PG : PG

OTHERS

HSINK : HEAT SINK
NC : NO CONNECTION

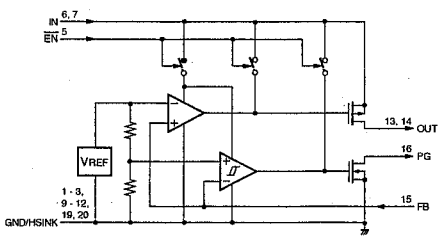

XC61CN1502NR (TOREX)
XC61CN2702NR (TOREX)

VOLTAGE DETECTOR

—TOP VIEW—

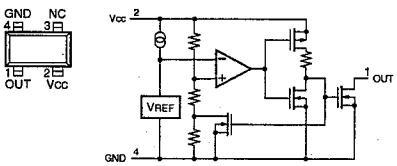

XC61CN2702MR (TOREX)

VOLTAGE DETECTOR

—TOP VIEW—

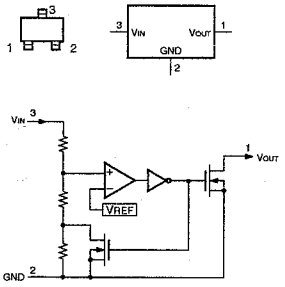

XC2V6000-4FF1152C12 (XILINX)

FPGA

–BOTTOM VIEW–

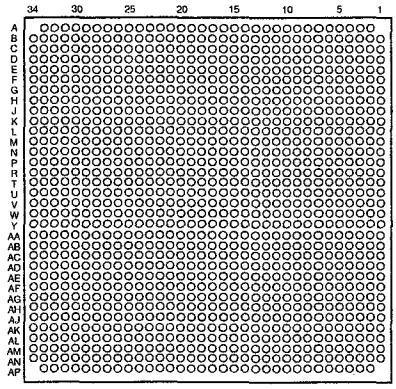

PIN NO.	I/O	SIGNAL	PIN NO.	I/O	SIGNAL	PIN NO.	I/O	SIGNAL	PIN NO.	I/O	SIGNAL
A2	—	GND	B17	I/O	IO_L82N_1	C31	I	TDI	E11	I/O	IO_L27N_1/VREF_1
A3	—	GND	B18	I/O	IO_L82P_0	C32	—	GND	E12	—	GND
A4	I/O	IO_L22N_1	B19	I/O	IO_L81N_0	C33	I/O	IO_L19P_0	E13	I/O	IO_L72N_1
A5	I/O	IO_L22P_1	B20	—	GND	C34	—	GND	E14	I/O	IO_L72P_1
A6	I/O	IO_L49N_1	B21	I/O	IO_L76N_0	D1	I/O	IO_L19P_2	E15	—	VCCO1
A7	I/O	IO_L49P_1	B22	I/O	IO_L76P_0	D2	I/O	IO_L01P_2	E16	I/O	IO_L98P_1/GCLK2S
A8	—	GND	B23	I/O	IO_L67N_0	D3	I/O	IO_L04P_2	E17	I/O	IO_L96N_1/GCLK3P
A9	I/O	IO_L51P_1	B24	I/O	IO_L67P_0	D4	—	GND	E18	I/O	IO_L96P_0/GCLK4S
A10	—	VCCO1	B25	I/O	IO_L60N_0	D5	O	TDO	E19	I/O	IO_L96N_0/GCLK5P
A11	I/O	IO_L73N_1	B26	I/O	IO_L60P_0	D6	I/O	IO_L06N_1	E20	—	VCCO0
A12	I/O	IO_L73P_1	B27	I/O	IO_L52P_0	D7	—	VCCO1	E21	I/O	IO_L73N_0
A13	I/O	IO_L79N_1	B28	I/O	IO_L49N_0	D8	I/O	IO_L04N_1	E22	I/O	IO_L73P_0
A14	I/O	IO_L79P_1	B29	I/O	IO_L49P_0	D9	I/O	IO_L30N_1	E23	—	GND
A15	I/O	IO_L81N_1/VREF_1	B30	I/O	IO_L22N_0	D10	I/O	IO_L54N_1	E24	I/O	IO_L27P_0/VREF_0
A16	—	VCCO1	B31	I/O	IO_L22P_0	D11	I/O	IO_L54P_1	E25	I/O	IO_L27N_0
A17	I/O	IO_L82P_1	B32	I/O	IO_L19N_0	D12	I/O	IO_L70N_1	E26	I/O	IO_L06N_0
A18	I/O	IO_L82N_0	B33	—	GND	D13	I/O	IO_L70P_1	E27	I/O	IO_L03P_0/VRN_0
A19	—	VCCO0	B34	—	GND	D14	I/O	IO_L84N_1	E28	I/O	IO_L03N_0/VRP_0
A20	I/O	IO_L81P_0/VREF_0	C1	—	GND	D15	I/O	IO_L84P_1	E29	I	HSWAP_EN
A21	I/O	IO_L79N_0	C2	I/O	IO_L01N_1	D16	I/O	IO_L94P_1/VREF_1	E30	—	GND
A22	I/O	IO_L79P_0	C3	—	GND	D17	I/O	IO_L94N_1	E31	I/O	IO_L19P_7
A23	I/O	IO_L70N_0	C4	I	VBATT	D18	I/O	IO_L91P_0	E32	I/O	IO_L06N_7
A24	I/O	IO_L70P_0	C5	—	VCCAUX	D19	I/O	IO_L91N_0/VREF_0	E33	I/O	IO_L01N_7
A25	—	VCCO0	C6	I/O	IO_L06P_1	D20	I/O	IO_L76N_0	E34	I/O	IO_L04N_7
A26	I/O	IO_L52N_0	C7	I/O	IO_L28N_1	D21	I/O	IO_L76P_0	F1	I/O	IO_L43P_2
A27	—	GND	C8	I/O	IO_L28P_1	D22	I/O	IO_L54N_0	F2	I/O	IO_L25P_2
A28	I/O	IO_L51N_0	C9	I/O	IO_L30P_1	D23	I/O	IO_L54P_0	F3	I/O	IO_L24P_2
A29	I/O	IO_L51P_0/VREF_0	C10	—	GND	D24	I/O	IO_L53P_0	F4	I/O	IO_L06N_2
A30	I/O	IO_L25N_0	C11	I/O	IO_L68N_1	D25	I/O	IO_L28N_0	F5	I/O	IO_L03N_2
A31	I/O	IO_L25P_0	C12	I/O	IO_L68P_1	D26	I/O	IO_L28P_0	F6	—	GND
A32	—	GND	C13	I/O	IO_L78N_1	D27	I/O	IO_L24P_0	F7	I	TCK
A33	—	GND	C14	I/O	IO_L78P_1	D28	—	VCCO0	F8	I/O	IO_L03P_1/VRN_1
B1	—	GND	C15	I/O	IO_L91P_1/VREF_1	D29	I/O	IO_L01N_0	F9	I/O	IO_L03N_1/VRP_1
B2	—	GND	C16	I/O	IO_L91N_1	D30	I	PROG_B	F10	I/O	IO_L21N_1/VREF_1
B3	I/O	IO_L01P_1	C17	—	VCCAUX	D31	—	GND	F11	I/O	IO_L60N_1
B4	I/O	IO_L19N_1	C18	I/O	IO_L94P_0	D32	I/O	IO_L06P_7	F12	I/O	IO_L60P_1
B5	I/O	IO_L19P_1	C19	I/O	IO_L94N_0/VREF_0	D33	I/O	IO_L01P_7	F13	I/O	IO_L69P_1
B6	I/O	IO_L25N_1	C20	I/O	IO_L84N_0	D34	I/O	IO_L04P_7	F14	I/O	IO_L69N_1/VREF_1
B7	I/O	IO_L25P_1	C21	I/O	IO_L84P_0	E1	I/O	IO_L19N_2	F15	I/O	IO_L75N_1/VREF_1
B8	I/O	IO_L51N_1/VREF_1	C22	I/O	IO_L72N_0	E2	I/O	IO_L01N_2	F16	I/O	IO_L93N_1
B9	I/O	IO_L52N_1	C23	I/O	IO_L72P_0	E3	I/O	IO_L04N_2	F17	I/O	IO_L93P_1
B10	I/O	IO_L52P_1	C24	I/O	IO_L53N_0	E4	I/O	IO_L06P_2	F18	I/O	IO_L93N_0
B11	I/O	IO_L67N_1	C25	—	GND	E5	—	GND	F19	I/O	IO_L93P_0
B12	I/O	IO_L67P_1	C26	I/O	IO_L24N_0	E6	I	TMS	F20	I/O	IO_L75P_0/VREF_0
B13	I/O	IO_L76N_1	C27	I/O	IO_L21N_0	E7	I/O	IO_L04P_1/VREF_1	F21	I/O	IO_L69P_0/VREF_0
B14	I/O	IO_L76P_1	C28	I/O	IO_L21P_0/VREF_0	E8	I/O	IO_L24N_1	F22	I/O	IO_L69N_0
B15	—	GND	C29	I/O	IO_L01P_0	E9	I/O	IO_L24P_1	F23	I/O	IO_L30N_0
B16	I/O	IO_L81P_1	C30	—	VCCAUX	E10	I/O	IO_L27P_1	F24	I/O	IO_L30P_0

PIN NO.	I/O	SIGNAL	PIN NO.	I/O	SIGNAL	PIN NO.	I/O	SIGNAL	PIN NO.	I/O	SIGNAL
F25	I/O	IO_L04N_0/VREF_0	H5	I/O	IO_L28P_2	J19	—	GND	K33	I/O	IO_L46N_7
F26	I/O	IO_L04P_0	H6	I/O	IO_L22N_2	J20	I/O	IO_L77N_0	K34	—	VCCO7
F27	I/O	IO_L06P_0	H7	I/O	IO_L21N_2	J21	I/O	IO_L50P_0	L1	I/O	IO_L73P_2
F28	—	DXN	H8	—	GND	J22	I/O	IO_L50N_0	L2	I/O	IO_L67P_2
F29	—	GND	H9	I/O	IO_L02P_1	J23	I/O	IO_L20P_0	L3	I/O	IO_L52P_2
F30	I/O	IO_L03N_7	H10	I/O	IO_L02N_1	J24	I/O	IO_L20N_0	L4	I/O	IO_L53N_2
F31	I/O	IO_L19N_7	H11	I/O	IO_L05N_1	J25	I/O	IO_L02N_7/VRP_7	L5	I/O	IO_L48N_2
F32	I/O	IO_L30P_7	H12	I/O	IO_L29P_1	J26	I/O	IO_L20N_7	L6	I/O	IO_L51N_2
F33	I/O	IO_L22P_7	H13	I/O	IO_L29N_1	J27	I/O	IO_L21N_7	L7	I/O	IO_L29N_2
F34	I/O	IO_L28P_7	H14	I/O	IO_L74P_1	J28	I/O	IO_L21P_7/VREF_7	L8	I/O	IO_L44N_2
G1	I/O	IO_L43N_2	H15	I/O	IO_L74N_1	J29	I/O	IO_L25N_7	L9	I/O	IO_L23P_2
G2	I/O	IO_L25N_2	H16	I/O	IO_L95P_1/GCLK0S	J30	I/O	IO_L27P_7/VREF_7	L10	I/O	IO_L23N_2
G3	I/O	IO_L24N_2	H17	I/O	IO_L95N_1/GCLK1P	J31	I/O	IO_L43N_7	L11	—	VCCINT
G4	—	VCCO2	H18	I/O	IO_L83P_0	J32	I/O	IO_L48N_7	L12	—	VCCO1
G5	I/O	IO_L03P_2/VREF_2	H19	I/O	IO_L83N_0	J33	I/O	IO_L46P_7	L13	—	VCCO1
G6	I/O	IO_L22P_2	H20	I/O	IO_L74P_0	J34	I/O	IO_L45N_7	L14	—	VCCO1
G7	—	GND	H21	I/O	IO_L74N_0	K1	—	VCCO2	L15	—	VCCO1
G8	—	RSVD	H22	I/O	IO_L29P_0	K2	I/O	IO_L49N_2	L16	I/O	IO_L80P_1
G9	I/O	IO_L21P_1	H23	I/O	IO_L29N_0	K3	—	GND	L17	I/O	IO_L80N_1
G10	I/O	IO_L23N_1	H24	I/O	IO_L05P_0	K4	I/O	IO_L53P_2	L18	I/O	IO_L80P_0
G11	I/O	IO_L23P_1	H25	I/O	IO_L05N_0	K5	I/O	IO_L48P_2	L19	I/O	IO_L80N_0
G12	I/O	IO_L53N_1	H26	I/O	IO_L02N_0	K6	I/O	IO_L27P_2/VREF_2	L20	—	VCCO0
G13	I/O	IO_L53P_1	H27	—	GND	K7	I/O	IO_L29P_2	L21	—	VCCO0
G14	—	GND	H28	I/O	IO_L25P_7	K8	I/O	IO_L20P_2	L22	—	VCCO0
G15	I/O	IO_L75P_1	H29	I/O	IO_L24N_7	K9	I/O	IO_L05P_2	L23	—	VCCO0
G16	I/O	IO_L92N_1	H30	I/O	IO_L27N_7	K10	I/O	IO_L02P_2/VRN_2	L24	—	VCCINT
G17	I/O	IO_L92P_1	H31	I/O	IO_L43P_7	K11	I/O	IO_L02N_2/VRP_2	L25	I/O	IO_L05P_7
G18	I/O	IO_L92N_0	H32	I/O	IO_L48P_7	K12	I/O	IO_L26P_1	L26	I/O	IO_L23P_7
G19	I/O	IO_L92P_0	H33	I/O	IO_L45P_7/VREF_7	K13	I/O	IO_L50P_1	L27	I/O	IO_L44N_7
G20	I/O	IO_L75N_0	H34	—	GND	K14	I/O	IO_L50N_1	L28	I/O	IO_L26N_7
G21	—	GND	J1	I/O	IO_L45N_2	K15	I/O	IO_L77P_1	L29	I/O	IO_L51N_7
G22	I/O	IO_L68N_0	J2	I/O	IO_L49P_2	K16	I/O	IO_L77N_1	L30	I/O	IO_L53N_7
G23	I/O	IO_L68P_0	J3	I/O	IO_L46N_2	K17	I/O	IO_L83P_1	L31	I/O	IO_L54P_7
G24	I/O	IO_L26N_0	J4	I/O	IO_L30N_2	K18	I/O	IO_L95N_0/GCLK7P	L32	I/O	IO_L67P_7
G25	I/O	IO_L26P_0	J5	I/O	IO_L28N_2	K19	I/O	IO_L77P_0	L33	I/O	IO_L52P_7
G26	I/O	IO_L02P_0	J6	I/O	IO_L27N_2	K20	I/O	IO_L71P_0	L34	I/O	IO_L70P_7
G27	—	DXP	J7	I/O	IO_L21P_2/VREF_2	K21	I/O	IO_L71N_0	M1	I/O	IO_L73N_2
G28	—	GND	J8	I/O	IO_L20N_2	K22	I/O	IO_L23P_0	M2	I/O	IO_L67N_2
G29	I/O	IO_L24P_7	J9	I/O	IO_L05N_2	K23	I/O	IO_L23N_0	M3	I/O	IO_L52N_2
G30	I/O	IO_L03P_7/VREF_7	J10	I/O	IO_L05P_1	K24	I/O	IO_L05N_7	M4	I/O	IO_L54P_2
G31	—	VCCO7	J11	I/O	IO_L20P_1	K25	I/O	IO_L02P_7/VRN_7	M5	—	GND
G32	I/O	IO_L30N_7	J12	I/O	IO_L20N_1	K26	I/O	IO_L23N_7	M6	I/O	IO_L51P_2/VREF_2
G33	I/O	IO_L22N_7	J13	I/O	IO_L26N_1	K27	I/O	IO_L20P_7	M7	I/O	IO_L50P_2
G34	I/O	IO_L28N_7	J14	I/O	IO_L71P_1	K28	I/O	IO_L26P_7	M8	I/O	IO_L44P_2
H1	—	GND	J15	I/O	IO_L71N_1	K29	I/O	IO_L53P_7	M9	I/O	IO_L47N_2
H2	I/O	IO_L45P_2/VREF_2	J16	—	GND	K30	I/O	IO_L49P_7	M10	I/O	IO_L26N_2
H3	I/O	IO_L46P_2	J17	I/O	IO_L83N_1	K31	I/O	IO_L49N_7	M11	—	VCCO2
H4	I/O	IO_L30P_2	J18	I/O	IO_L95P_0/GCLK6S	K32	—	GND	M12	—	VCCINT

PIN NO.	I/O	SIGNAL	PIN NO.	I/O	SIGNAL	PIN NO.	I/O	SIGNAL	PIN NO.	I/O	SIGNAL
M13	—	VCCO1	N27	I/O	IO_L68N_7	R7	I/O	IO_L81N_2	T21	—	GND
M14	—	VCCO1	N28	I/O	IO_L50N_7	R8	I/O	IO_L77N_2	T22	—	VCCINT
M15	—	VCCO1	N29	I/O	IO_L69N_7	R9	I/O	IO_L74P_2	T23	—	VCCO7
M16	—	VCCO1	N30	I/O	IO_L72P_7	R10	I/O	IO_L71P_2	T24	I/O	IO_L80N_7
M17	—	VCCO1	N31	I/O	IO_L73P_7	R11	—	VCCO2	T25	I/O	IO_L83N_7
M18	—	VCCO0	N32	I/O	IO_L78P_7	R12	—	VCCO2	T26	—	GND
M19	—	VCCO0	N33	I/O	IO_L76P_7	R13	—	VCCINT	T27	I/O	IO_L77P_7
M20	—	VCCO0	N34	I/O	IO_L81P_7/VREF_7	R14	—	GND	T28	I/O	IO_L95P_7
M21	—	VCCO0	P1	I/O	IO_L79N_2	R15	—	GND	T29	I/O	IO_L93N_7
M22	—	VCCO0	P2	I/O	IO_L75N_2	R16	—	GND	T30	I/O	IO_L91P_7
M23	—	VCCINT	P3	I/O	IO_L72N_2	R17	—	GND	T31	I/O	IO_L79N_7
M24	—	VCCO7	P4	I/O	IO_L76P_2	R18	—	GND	T32	I/O	IO_L84N_7
M25	I/O	IO_L29N_7	P5	I/O	IO_L70N_2	R19	—	GND	T33	I/O	IO_L82N_7
M26	I/O	IO_L47N_7	P6	I/O	IO_L69P_2/VREF_2	R20	—	GND	T34	—	VCCO7
M27	I/O	IO_L44P_7	P7	—	GND	R21	—	GND	U1	I/O	IO_L94N_2
M28	I/O	IO_L50P_7	P8	I/O	IO_L68P_2	R22	—	VCCINT	U2	I/O	IO_L94P_2
M29	I/O	IO_L51P_7/VREF_7	P9	I/O	IO_L74N_2	R23	—	VCCO7	U3	I/O	IO_L96N_2
M30	—	GND	P10	I/O	IO_L71N_2	R24	—	VCCO7	U4	I/O	IO_L84N_2
M31	I/O	IO_L54N_7	P11	—	VCCO2	R25	I/O	IO_L71P_7	U5	I/O	IO_L82N_2
M32	I/O	IO_L67N_7	P12	—	VCCO2	R26	I/O	IO_L74P_7	U6	I/O	IO_L93P_2/VREF_2
M33	I/O	IO_L52N_7	P13	—	VCCINT	R27	I/O	IO_L77N_7	U7	I/O	IO_L92N_2
M34	I/O	IO_L70N_7	P14	—	GND	R28	I/O	IO_L75N_7	U8	I/O	IO_L95P_2
N1	I/O	IO_L79P_2	P15	—	GND	R29	I/O	IO_L75P_7/VREF_7	U9	I/O	IO_L95N_2
N2	I/O	IO_L75P_2/VREF_2	P16	—	GND	R30	—	VCCO7	U10	I/O	IO_L83P_2
N3	I/O	IO_L72P_2	P17	—	GND	R31	I/O	IO_L79P_7	U11	I/O	IO_L80P_2
N4	I/O	IO_L54N_2	P18	—	GND	R32	I/O	IO_L84P_7	U12	—	VCCO2
N5	I/O	IO_L70P_2	P19	—	GND	R33	—	GND	U13	—	VCCINT
N6	I/O	IO_L69N_2	P20	—	GND	R34	I/O	IO_L82P_7	U14	—	GND
N7	I/O	IO_L50N_2	P21	—	GND	T1	—	VCCO2	U15	—	GND
N8	I/O	IO_L68N_2	P22	—	VCCINT	T2	I/O	IO_L91N_2	U16	—	GND
N9	I/O	IO_L47P_2	P23	—	VCCO7	T3	I/O	IO_L78N_2	U17	—	GND
N10	I/O	IO_L26P_2	P24	—	VCCO7	T4	I/O	IO_L84P_2	U18	—	GND
N11	—	VCCO2	P25	I/O	IO_L71N_7	T5	I/O	IO_L82P_2	U19	—	GND
N12	—	VCCO2	P26	I/O	IO_L74N_7	T6	I/O	IO_L93N_2	U20	—	GND
N13	—	VCCINT	P27	I/O	IO_L68P_7	T7	I/O	IO_L92P_2	U21	—	GND
N14	—	VCCINT	P28	—	GND	T8	I/O	IO_L77P_2	U22	—	VCCINT
N15	—	VCCINT	P29	I/O	IO_L69P_7/VREF_7	T9	—	GND	U23	—	VCCO7
N16	—	VCCINT	P30	I/O	IO_L72N_7	T10	I/O	IO_L83N_2	U24	I/O	IO_L80P_7
N17	—	VCCINT	P31	I/O	IO_L73N_7	T11	I/O	IO_L80N_2	U25	I/O	IO_L83P_7
N18	—	VCCINT	P32	I/O	IO_L78N_7	T12	—	VCCO2	U26	I/O	IO_L92N_7
N19	—	VCCINT	P33	I/O	IO_L76N_7	T13	—	VCCINT	U27	I/O	IO_L92P_7
N20	—	VCCINT	P34	I/O	IO_L81N_7	T14	—	GND	U28	I/O	IO_L95N_7
N21	—	VCCINT	R1	I/O	IO_L91P_2	T15	—	GND	U29	I/O	IO_L93P_7/VREF_7
N22	—	VCCINT	R2	—	GND	T16	—	GND	U30	I/O	IO_L91N_7
N23	—	VCCO7	R3	I/O	IO_L78P_2	T17	—	GND	U31	I/O	IO_L96P_7
N24	—	VCCO7	R4	I/O	IO_L76N_2	T18	—	GND	U32	—	VCCAUX
N25	I/O	IO_L29P_7	R5	—	VCCO2	T19	—	GND	U33	I/O	IO_L94P_7
N26	I/O	IO_L47P_7	R6	I/O	IO_L81P_2/VREF_2	T20	—	GND	U34	I/O	IO_L94N_7

PIN NO.	I/O	SIGNAL	PIN NO.	I/O	SIGNAL	PIN NO.	I/O	SIGNAL	PIN NO.	I/O	SIGNAL
V1	I/O	IO_L92N_3	W15	—	GND	Y29	I/O	IO_L76N_6	AB9	I/O	IO_L48N_3
V2	I/O	IO_L92P_3	W16	—	GND	Y30	—	VCCO6	AB10	I/O	IO_L51N_3/VREF_3
V3	—	VCCAUX	W17	—	GND	Y31	I/O	IO_L93P_6	AB11	—	VCCO3
V4	I/O	IO_L96P_2	W18	—	GND	Y32	I/O	IO_L83P_6	AB12	—	VCCO3
V5	I/O	IO_L95N_3	W19	—	GND	Y33	—	GND	AB13	—	VCCINT
V6	I/O	IO_L96N_3	W20	—	GND	Y34	I/O	IO_L81N_6/VREF_6	AB14	—	VCCINT
V7	I/O	IO_L94N_3	W21	—	GND	AA1	I/O	IO_L74N_3	AB15	—	VCCINT
V8	I/O	IO_L84P_3	W22	—	VCCINT	AA2	I/O	IO_L71N_3	AB16	—	VCCINT
V9	I/O	IO_L84N_3	W23	—	VCCO6	AA3	I/O	IO_L79N_3	AB17	—	VCCINT
V10	I/O	IO_L93N_3/VREF_3	W24	I/O	IO_L79P_6	AA4	I/O	IO_L77N_3	AB18	—	VCCINT
V11	I/O	IO_L82P_3	W25	I/O	IO_L82P_6	AA5	I/O	IO_L73N_3	AB19	—	VCCINT
V12	—	VCCO3	W26	—	GND	AA6	I/O	IO_L78P_3	AB20	—	VCCINT
V13	—	VCCINT	W27	I/O	IO_L73N_6	AA7	—	GND	AB21	—	VCCINT
V14	—	GND	W28	I/O	IO_L91P_6	AA8	I/O	IO_L76P_3	AB22	—	VCCINT
V15	—	GND	W29	I/O	IO_L84P_6	AA9	I/O	IO_L72N_3	AB23	—	VCCO6
V16	—	GND	W30	I/O	IO_L95P_6	AA10	I/O	IO_L75P_3	AB24	—	VCCO6
V17	—	GND	W31	I/O	IO_L93N_6/VREF_6	AA11	—	VCCO3	AB25	I/O	IO_L43N_6
V18	—	GND	W32	I/O	IO_L96N_6	AA12	—	VCCO3	AB26	I/O	IO_L49N_6
V19	—	GND	W33	I/O	IO_L81P_6	AA13	—	VCCINT	AB27	I/O	IO_L54P_6
V20	—	GND	W34	—	VCCO6	AA14	—	GND	AB28	I/O	IO_L52N_6
V21	—	GND	Y1	I/O	IO_L80P_3	AA15	—	GND	AB29	I/O	IO_L74P_6
V22	—	VCCINT	Y2	—	GND	AA16	—	GND	AB30	I/O	IO_L78N_6
V23	—	VCCO6	Y3	I/O	IO_L91P_3	AA17	—	GND	AB31	I/O	IO_L75P_6
V24	I/O	IO_L79N_6	Y4	I/O	IO_L83P_3	AA18	—	GND	AB32	I/O	IO_L69N_6/VREF_6
V25	I/O	IO_L82N_6	Y5	—	VCCO3	AA19	—	GND	AB33	I/O	IO_L77P_6
V26	I/O	IO_L94P_6	Y6	I/O	IO_L78N_3	AA20	—	GND	AB34	I/O	IO_L80P_6
V27	I/O	IO_L94N_6	Y7	I/O	IO_L76N_3	AA21	—	GND	AC1	I/O	IO_L69P_3
V28	I/O	IO_L91N_6	Y8	I/O	IO_L81P_3	AA22	—	VCCINT	AC2	I/O	IO_L53N_3
V29	I/O	IO_L84N_6	Y9	I/O	IO_L72P_3	AA23	—	VCCO6	AC3	I/O	IO_L68N_3
V30	I/O	IO_L95N_6	Y10	I/O	IO_L75N_3/VREF_3	AA24	—	VCCO6	AC4	I/O	IO_L67N_3
V31	I/O	IO_L96N_7	Y11	—	VCCO3	AA25	I/O	IO_L67P_6	AC5	—	GND
V32	I/O	IO_L96P_6	Y12	—	VCCO3	AA26	I/O	IO_L70P_6	AC6	I/O	IO_L70P_3
V33	I/O	IO_L92P_6	Y13	—	VCCINT	AA27	I/O	IO_L54N_6	AC7	I/O	IO_L54P_3
V34	I/O	IO_L92N_6	Y14	—	GND	AA28	—	GND	AC8	I/O	IO_L52N_3
W1	—	VCCO3	Y15	—	GND	AA29	I/O	IO_L74N_6	AC9	I/O	IO_L48P_3
W2	I/O	IO_L80N_3	Y16	—	GND	AA30	I/O	IO_L78P_6	AC10	I/O	IO_L51P_3
W3	I/O	IO_L91N_3	Y17	—	GND	AA31	I/O	IO_L75N_6/VREF_6	AC11	—	VCCO3
W4	I/O	IO_L83N_3	Y18	—	GND	AA32	I/O	IO_L83N_6	AC12	—	VCCINT
W5	I/O	IO_L95P_3	Y19	—	GND	AA33	I/O	IO_L77N_6	AC13	—	VCCO4
W6	I/O	IO_L96P_3	Y20	—	GND	AA34	I/O	IO_L80N_6	AC14	—	VCCO4
W7	I/O	IO_L94P_3	Y21	—	GND	AB1	I/O	IO_L74P_3	AC15	—	VCCO4
W8	I/O	IO_L81N_3/VREF_3	Y22	—	VCCINT	AB2	I/O	IO_L71P_3	AC16	—	VCCO4
W9	—	GND	Y23	—	VCCO6	AB3	I/O	IO_L79P_3	AC17	—	VCCO4
W10	I/O	IO_L93P_3	Y24	—	VCCO6	AB4	I/O	IO_L77P_3	AC18	—	VCCO5
W11	I/O	IO_L82N_3	Y25	I/O	IO_L67N_6	AB5	I/O	IO_L73P_3	AC19	—	VCCO5
W12	—	VCCO3	Y26	I/O	IO_L70N_6	AB6	I/O	IO_L70N_3	AC20	—	VCCO5
W13	—	VCCINT	Y27	I/O	IO_L73P_6	AB7	I/O	IO_L54N_3	AC21	—	VCCO5
W14	—	GND	Y28	I/O	IO_L76P_6	AB8	I/O	IO_L52P_3	AC22	—	VCCO5

PIN NO.	I/O	SIGNAL	PIN NO.	I/O	SIGNAL	PIN NO.	I/O	SIGNAL	PIN NO.	I/O	SIGNAL
AJ11	I/O	IO_L51N_4	AK25	I/O	IO_L30P_5	AM5	—	VCCAUX	AN19	I/O	IO_L81P_5
AJ12	I/O	IO_L51P_4/VREF_4	AK26	I/O	IO_L21N_5/VREF_5	AM6	I/O	IO_L04P_4	AN20	—	GND
AJ13	I/O	IO_L69N_4	AK27	I/O	IO_L21P_5	AM7	I/O	IO_L06P_4	AN21	I/O	IO_L76P_5
AJ14	I/O	IO_L69P_4/VREF_4	AK28	I/O	*3	AM8	I/O	IO_L06N_4	AN22	I/O	IO_L76N_5
AJ15	I/O	IO_L81P_4/VREF_4	AK29	I	M2	AM9	I/O	IO_L24N_4	AN23	I/O	IO_L67P_5
AJ16	I/O	IO_L92P_4	AK30	—	GND	AM10	—	GND	AN24	I/O	IO_L67N_5
AJ17	I/O	IO_L92N_4	AK31	I/O	IO_L05N_6	AM11	I/O	IO_L54N_4	AN25	I/O	IO_L60P_5
AJ18	I/O	IO_L93P_5	AK32	I/O	IO_L03N_6/VREF_6	AM12	I/O	IO_L72P_4	AN26	I/O	IO_L60N_5
AJ19	I/O	IO_L93N_5	AK33	I/O	IO_L20N_6	AM13	I/O	IO_L72N_4	AN27	I/O	IO_L52N_5
AJ20	I/O	IO_L75N_5/VREF_5	AK34	I/O	IO_L26N_6	AM14	I/O	IO_L93P_4	AN28	I/O	IO_L49P_5
AJ21	I/O	IO_L69N_5/VREF_5	AL1	I/O	IO_L21N_3/VREF_3	AM15	I/O	IO_L93N_4	AN29	I/O	IO_L49N_5
AJ22	I/O	IO_L69P_5	AL2	I/O	IO_L05P_3	AM16	I/O	IO_L94N_4/VREF_4	AN30	I/O	IO_L22P_5
AJ23	I/O	IO_L68P_5	AL3	I/O	IO_L02P_3/VRN_3	AM17	I/O	IO_L94P_4	AN31	I/O	IO_L22N_5
AJ24	I/O	IO_L68N_5	AL4	—	GND	AM18	—	VCCAUX	AN32	I/O	IO_L19P_5
AJ25	I/O	IO_L23P_5	AL5	I/O	IO_L01P_4/INIT_B	AM19	I/O	IO_L91N_5	AN33	—	GND
AJ26	I/O	IO_L06P_5	AL6	I/O	IO_L04N_4/VREF_4	AM20	I/O	IO_L91P_5/VREF_5	AN34	—	GND
AJ27	I/O	IO_L06N_5	AL7	—	VCCO4	AM21	I/O	IO_L83P_5	AP2	—	GND
AJ28	I	M1	AL8	I/O	IO_L24P_4	AM22	I/O	IO_L83N_5	AP3	—	GND
AJ29	—	GND	AL9	I/O	IO_L28P_4	AM23	I/O	IO_L70P_5	AP4	I/O	IO_L25P_4
AJ30	I/O	IO_L02P_6/VRN_6	AL10	I/O	IO_L28N_4	AM24	I/O	IO_L70N_5	AP5	I/O	IO_L25N_4
AJ31	I/O	IO_L05P_6	AL11	I/O	IO_L54P_4	AM25	—	GND	AP6	I/O	IO_L49P_4
AJ32	I/O	IO_L21P_6	AL12	I/O	IO_L70P_4	AM26	I/O	IO_L25P_5	AP7	I/O	IO_L49N_4
AJ33	I/O	IO_L44P_6	AL13	I/O	IO_L70N_4	AM27	I/O	IO_L25N_5	AP8	—	GND
AJ34	I/O	IO_L47P_6	AL14	I/O	IO_L84P_4	AM28	I/O	IO_L04N_5	AP9	I/O	IO_L52N_4
AK1	I/O	IO_L21P_3	AL15	I/O	IO_L84N_4	AM29	I/O	IO_L04P_5/VREF_5	AP10	—	VCCO4
AK2	I/O	IO_L05N_3	AL16	I/O	IO_L91N_4/VREF_4	AM30	—	VCCAUX	AP11	I/O	IO_L73P_4
AK3	I/O	IO_L02N_3/VRP_3	AL17	I/O	IO_L91P_4	AM31	I/O	IO_L01P_5/CS_B	AP12	I/O	IO_L73N_4
AK4	I/O	IO_L19P_3	AL18	I/O	IO_L94N_5	AM32	—	GND	AP13	I/O	IO_L76P_4
AK5	—	GND	AL19	I/O	IO_L94P_5/VREF_5	AM33	I/O	IO_L19N_5	AP14	I/O	IO_L76N_4
AK6	I	PWRDWN_B	AL20	I/O	IO_L84P_5	AM34	—	GND	AP15	I/O	IO_L79P_4
AK7	I/O	*1	AL21	I/O	IO_L84N_5	AN1	—	GND	AP16	—	VCCO4
AK8	I/O	*2	AL22	I/O	IO_L72P_5	AN2	—	GND	AP17	I/O	IO_L82N_4
AK9	I/O	IO_L05N_4/VRP_4	AL23	I/O	IO_L72N_5	AN3	I/O	IO_L19N_4	AP18	I/O	IO_L82P_5
AK10	I/O	IO_L30N_4	AL24	I/O	IO_L54P_5	AN4	I/O	IO_L22P_4	AP19	—	VCCO5
AK11	I/O	IO_L30P_4	AL25	I/O	IO_L54N_5	AN5	I/O	IO_L22N_4	AP20	I/O	IO_L81N_5/VREF_5
AK12	—	GND	AL26	I/O	IO_L24P_5	AN6	I/O	IO_L27P_4/VREF_4	AP21	I/O	IO_L79P_5
AK13	I/O	IO_L78P_4	AL27	I/O	IO_L24N_5	AN7	I/O	IO_L27N_4	AP22	I/O	IO_L79N_5
AK14	I/O	IO_L78N_4	AL28	—	VCCO5	AN8	I/O	IO_L52P_4	AP23	I/O	IO_L73P_5
AK15	—	VCCO4	AL29	I/O	*4	AN9	I/O	IO_L60P_4	AP24	I/O	IO_L73N_5
AK16	I/O	IO_L96N_4/GCLK1S	AL30	I/O	IO_L01N_5/RDWR_B	AN10	I/O	IO_L60N_4	AP25	—	VCCO5
AK17	I/O	IO_L96P_4/GCLK0P	AL31	—	GND	AN11	I/O	IO_L67P_4	AP26	I/O	IO_L52P_5
AK18	I/O	IO_L96N_5/GCLK7S	AL32	I/O	IO_L03P_6	AN12	I/O	IO_L67N_4	AP27	—	GND
AK19	I/O	IO_L96P_5/GCLK6P	AL33	I/O	IO_L20P_6	AN13	I/O	IO_L75P_4/VREF_4	AP28	I/O	IO_L51P_5
AK20	—	VCCO5	AL34	I/O	IO_L26P_6	AN14	I/O	IO_L75N_4	AP29	I/O	IO_L51N_5/VREF_5
AK21	I/O	IO_L78P_5	AM1	—	GND	AN15	—	GND	AP30	I/O	IO_L28P_5
AK22	I/O	IO_L78N_5	AM2	I/O	IO_L19P_4	AN16	I/O	IO_L79N_4	AP31	I/O	IO_L28N_5
AK23	—	GND	AM3	—	GND	AN17	I/O	IO_L82P_4	AP32	—	GND
AK24	I/O	IO_L30N_5	AM4	I/O	IO_L01N_4/DOUT	AN18	I/O	IO_L82N_5	AP33	—	GND

*1 (AK7) : IO_L03N_4/D2/ALT_VRP_4 *3 (AK28) : IO_L03N_5/D4/ALT_VRP_5
*2 (AK8) : IO_L03P_4/D3/ALT_VRN_4 *4 (AL29) : IO_L03P_5/D5/ALT_VRN_5

PIN NO.	I/O	SIGNAL	PIN NO.	I/O	SIGNAL	PIN NO.	I/O	SIGNAL	PIN NO.	I/O	SIGNAL
AC23	—	VCCINT	AE3	—	GND	AF17	I/O	IO_L95N_4/GCLK3S	AG31	I/O	IO_L29N_6
AC24	—	VCCO6	AE4	I/O	IO_L49N_3	AF18	I/O	IO_L95P_5/GCLK4P	AG32	I/O	IO_L30N_6
AC25	I/O	IO_L43P_6	AE5	I/O	IO_L50P_3	AF19	—	GND	AG33	I/O	IO_L51N_6/VREF_6
AC26	I/O	IO_L49P_6	AE6	I/O	IO_L46P_3	AF20	I/O	IO_L71N_5	AG34	—	GND
AC27	I/O	IO_L46N_6	AE7	I/O	IO_L30P_3	AF21	I/O	IO_L71P_5	AH1	I/O	IO_L26N_3
AC28	I/O	IO_L52P_6	AE8	I/O	IO_L28N_3	AF22	I/O	IO_L26N_5	AH2	I/O	IO_L20N_3
AC29	I/O	IO_L50N_6	AE9	I/O	IO_L45P_3	AF23	I/O	IO_L26P_5	AH3	I/O	IO_L23N_3
AC30	—	GND	AE10	I/O	IO_L06N_3	AF24	I/O	IO_L20P_5	AH4	—	VCCO3
AC31	I/O	IO_L72P_6	AE11	I/O	IO_L03N_3/VREF_3	AF25	I/O	IO_L04P_6	AH5	I/O	IO_L25P_3
AC32	I/O	IO_L69P_6	AE12	I/O	IO_L23N_4	AF26	I/O	IO_L19N_6	AH6	I/O	IO_L04N_3
AC33	I/O	IO_L68N_6	AE13	I/O	IO_L23P_4	AF27	I/O	IO_L25P_6	AH7	—	GND
AC34	I/O	IO_L71N_6	AE14	I/O	IO_L68N_4	AF28	I/O	IO_L22N_6	AH8	I/O	CCLK
AD1	I/O	IO_L69N_3/VREF_3	AE15	I/O	IO_L68P_4	AF29	I/O	IO_L24P_6	AH9	I/O	IO_L21N_4
AD2	I/O	IO_L53P_3	AE16	I/O	IO_L80N_4	AF30	I/O	IO_L23N_6	AH10	I/O	IO_L21P_4/VREF_4
AD3	I/O	IO_L68P_3	AE17	I/O	IO_L80P_4	AF31	I/O	IO_L29P_6	AH11	I/O	IO_L02P_4/D1
AD4	I/O	IO_L67P_3	AE18	I/O	IO_L80N_5	AF32	I/O	IO_L30P_6	AH12	I/O	IO_L50P_4
AD5	I/O	IO_L50N_3	AE19	I/O	IO_L80P_5	AF33	I/O	IO_L51P_6	AH13	I/O	IO_L50N_4
AD6	I/O	IO_L46N_3	AE20	I/O	IO_L53N_5	AF34	I/O	IO_L53P_6	AH14	—	GND
AD7	I/O	IO_L30N_3	AE21	I/O	IO_L53P_5	AG1	—	GND	AH15	I/O	IO_L81N_4
AD8	I/O	IO_L28P_3	AE22	I/O	IO_L05N_5/VRP_5	AG2	I/O	IO_L44P_3	AH16	I/O	IO_L83P_4
AD9	I/O	IO_L45N_3/VREF_3	AE23	I/O	IO_L05P_5/VRN_5	AG3	I/O	IO_L43P_3	AH17	I/O	IO_L83N_4
AD10	I/O	IO_L06P_3	AE24	I/O	IO_L01P_6	AG4	I/O	IO_L25N_3	AH18	I/O	IO_L92P_5
AD11	—	VCCINT	AE25	I/O	IO_L04N_6	AG5	I/O	IO_L29P_3	AH19	I/O	IO_L92N_5
AD12	—	VCCO5	AE26	I/O	IO_L28P_6	AG6	I/O	IO_L24P_3	AH20	I/O	IO_L75P_5
AD13	—	VCCO5	AE27	I/O	IO_L25N_6	AG7	I/O	IO_L22P_3	AH21	—	GND
AD14	—	VCCO5	AE28	I/O	IO_L27P_6	AG8	—	GND	AH22	I/O	IO_L29P_5
AD15	—	VCCO5	AE29	I/O	IO_L24N_6	AG9	I/O	IO_L01P_3	AH23	I/O	IO_L29N_5
AD16	I/O	IO_L77N_4	AE30	I/O	IO_L48P_6	AG10	I/O	IO_L02N_4/D0	AH24	I/O	IO_L27N_5/VREF_5
AD17	I/O	IO_L77P_4	AE31	I/O	IO_L45P_6	AG11	I/O	IO_L26N_4	AH25	I/O	IO_L27P_5
AD18	I/O	IO_L77N_5	AE32	—	GND	AG12	I/O	IO_L26P_4	AH26	I/O	IO_L23N_5
AD19	I/O	IO_L77P_5	AE33	I/O	IO_L53N_6	AG13	I/O	IO_L53N_4	AH27	I	M0
AD20	—	VCCO5	AE34	—	VCCO6	AG14	I/O	IO_L53P_4	AH28	—	GND
AD21	—	VCCO5	AF1	I/O	IO_L47P_3	AG15	I/O	IO_L74N_4	AH29	I/O	IO_L06P_6
AD22	—	VCCO5	AF2	I/O	IO_L44N_3	AG16	I/O	IO_L74P_4	AH30	I/O	IO_L02N_6/VRP_6
AD23	—	VCCO5	AF3	I/O	IO_L43N_3	AG17	I/O	IO_L95P_4/GCLK2P	AH31	—	VCCO6
AD24	—	VCCINT	AF4	I/O	IO_L49P_3	AG18	I/O	IO_L95N_5/GCLK5S	AH32	I/O	IO_L21N_6/VREF_6
AD25	I/O	IO_L01N_6	AF5	I/O	IO_L29N_3	AG19	I/O	IO_L74N_5	AH33	I/O	IO_L44N_6
AD26	I/O	IO_L28N_6	AF6	I/O	IO_L24N_3	AG20	I/O	IO_L74P_5	AH34	I/O	IO_L47N_6
AD27	I/O	IO_L46P_6	AF7	I/O	IO_L22N_3	AG21	I/O	IO_L50N_5	AJ1	I/O	IO_L26P_3
AD28	I/O	IO_L27N_6/VREF_6	AF8	I/O	IO_L27N_3/VREF_3	AG22	I/O	IO_L50P_5	AJ2	I/O	IO_L20P_3
AD29	I/O	IO_L50P_6	AF9	I/O	IO_L27P_3	AG23	I/O	IO_L20N_5	AJ3	I/O	IO_L23P_3
AD30	I/O	IO_L48N_6	AF10	I/O	IO_L01N_3	AG24	I/O	IO_L02N_5/D6	AJ4	I/O	IO_L19N_3
AD31	I/O	IO_L72N_6	AF11	I/O	IO_L03P_3	AG25	I/O	IO_L02P_5/D7	AJ5	I/O	IO_L04P_3
AD32	I/O	IO_L45N_6/VREF_6	AF12	I/O	IO_L29N_4	AG26	I/O	IO_L19P_6	AJ6	—	GND
AD33	I/O	IO_L68P_6	AF13	I/O	IO_L29P_4	AG27	—	GND	AJ7	I/O	DONE
AD34	I/O	IO_L71P_6	AF14	I/O	IO_L71N_4	AG28	I/O	IO_L22P_6	AJ8	I/O	IO_L05P_4/VRN_4
AE1	—	VCCO3	AF15	I/O	IO_L71P_4	AG29	I/O	IO_L06N_6	AJ9	I/O	IO_L20P_4
AE2	I/O	IO_L47N_3	AF16	—	GND	AG30	I/O	IO_L23P_6	AJ10	I/O	IO_L20N_4

Section 3
Circuit Description and Block Diagrams

回路概説

この回路概説は下記の項目に分けて記述してあります。オーバーオールブロック図を参照しながらのご利用をお薦めします。

【1】 ビデオ信号入力処理
【2】 オーディオ信号入力処理
【3】 記録デジタル信号処理
【4】 RF処理
【5】 アナログBetacam再生処理
【6】 再生デジタル信号処理
【7】 ビデオ信号出力処理
【8】 オーディオ信号出力処理
【9】 ネットワーク入出力処理
【10】同期処理
【11】システムコントロール
【12】サーボ

記録再生フォーマット

各機種の記録／再生が可能なフォーマットを下表に示します。

機種	HDW-						DVW-		MSW-			
	2000	D2000	M2000	S2000	A2100	M2100	2000	M2000	2000	A2000	M2000 M2000E	M2100 M2100E
Player	Recorder				Player		Recorder		Recorder			
記録フォーマット	HD	HD	HD	HD	—	—	DB	DB	IMX	IMX	IMX	—
再生フォーマット	HD	HD	HD	HD	HD	HD	—	—	—	—	—	—
	—	DB	DB	—	—	DB	DB	DB	—	—	DB	DB
	—	IMX	IMX	—	—	IMX	—	IMX	IMX	IMX	IMX	IMX
	—	—	SX	SX	—	SX	—	SX	SX	SX	SX	SX
	—	—	AB	AB*	AB	AB	—	AB	—	AB	AB	AB

* HDW-S2000のAnalog Betacam再生: AFM再生不可

HD = HDCAM, DB = Digital Betacam, IMX = MPEG IMX, SX = Betacam SX, AB = Analog Betacam/SP

【1】 ビデオ信号入力処理

ビデオ入力信号

各機種のビデオ入力信号を下表に示します。

	HDW- 2000, D2000, M2000, S2000	DVW- 2000, M2000	MSW- 2000, A2000, M2000, M2000E
SDTI (HDCAM)	HDCAM *1	—	—
SDTI-CP	—	—	MPEG2 4:2:2P@ML
HD-SDI	HD 4:2:2	—	—
SDI (SD)	—	SD 4:2:2	SD 4:2:2
Ethernet	—	—	MPEG2 4:2:2P@ML *2
ANALOG COMPONENT	—	SD Y/R-Y/B-Y	SD Y/R-Y/B-Y
ANALOG COMPOSITE	—	NTSC	NTSC or PAL

*1 HDW の SDTI (HDCAM)入力:
SDTI Interface Board HKDW-102
*2 MSW の Ethernet 入力:
Network Interface Board BKMW-E2000/E3000
HD Upconverter Board BKMW-104 を装着すると BKMW-E2000/E3000 は装着できません。

HDW ビデオ信号入力処理 (DIF-134, HIF-1, HPR-1, RX-80, SDI-63)

HDW シリーズには，上表に示したように 2 系統からビデオ信号が入力されます。
そのほかに，内蔵のビデオテスト信号発生器の信号も存在します。HPR-1 基板の入力フィルタ IC115 で記録系用のビデオテスト信号が生成され，出力フィルタ IC802 で再生系用のビデオテスト信号が生成されます。

SDTI (HDCAM) 入力 (DIF-134, HPR-1) ... HKDW-102 装着時

入力されたSDTI (HDCAM) 信号はDIF-134基板*でパラレルデータに変換され，パラレルデータからSDTIデコーダIC300でHDCAM圧縮データが抽出されます。抽出されたHDCAM圧縮データはFPGA IC400で位相調整されて，HPR-1 基板に送られ，記録用にエラー訂正符号が付加されます。

* DIF-134 基板: HPR-1 基板の子基板

HD-SDI 入力 (HIF-1, HPR-1, RX-80, SDI-63)

入力されたHD-SDI信号は，RX-80基板*1 でパラレルデータに変換され，パラレルデータからデフォーマッタ *2 IC200 と IC400 で HD ビデオデータが抽出されます。抽出された Y および C 各 10 ビットのパラレルビデオデータは，HIF-1 基板を経由して HPR-1 基板に送られ，記録用のデジタル処理を受けます。

*1 RX-80 基板: HIF-1 基板の末尾が 21 の場合は SDI-63 基板。HIF-1 基板の子基板。
*2 デフォーマッタ: SDI-63 基板の場合は Co-Processor IC101

DVW ビデオ信号入力処理 (EPR-1, SDI-52, VPR-91)

DVW シリーズには，上表に示したように 3 系統からビデオ信号が入力されます。
そのほかに，ビデオテスト信号が VPR-91 基板で生成されます。

SDI (SD) 入力 (SDI-52, VPR-91)

入力された SDI 信号は，SDI-52 基板*1 でパラレルデータに変換され，パラレルデータから SDI デコーダ IC106 で SD ビデオデータが抽出されます。抽出された 10 ビットパラレルビデオデータは，VPR-91 基板の VIOLA*2 ビデオプロセッサ IC701 に送られます。

*1 SDI-52 基板: VPR-91 基板の子基板
*2 VIOLA: VPR-91 基板のビデオプロセッサ IC701 のニックネーム

アナログコンポーネント，コンポジット入力 (VPR-91)

入力されたアナログY/R-Y/B-Y信号およびアナログコンポジット信号は，VPR-91基板でA/D変換*1 され，PIAS*2 デジタルエンコーダIC313で10ビットのコンポーネントパラレルデータに変換されます。入力ビデオ選択で選ばれたデータがVIOLAに送られます。

*1 A/D変換: Y信号のA/Dコンバータは IC523，R-Y/B-Y信号は PIAS IC313，コンポジット信号は IC120
*2 PIAS: VPR-91 基板のデジタルエンコーダ IC313 のニックネーム

VIOLA によるビデオ入力信号処理 (VPR-91)

ビデオ入力信号は，YとCが多重された4:2:2 10ビットパラレルデータ形式でVIOLAに入力されます。ビデオ入力信号選択で選ばれたビデオ信号に対してVIOLA，FPGA0 IC700, FPGA1 IC714が以下の処理を行います。

(1) TBC*機能で本機のリファレンスクロックに同期させる
(2) セットアップ除去 (NTSCのみ)
(3) ビデオ入力信号に付加されているVITCを読み取る。記録用VITCを付加する。

VIOLAから出力された10ビットパラレルビデオデータは，EPR-1基板に送られ，記録用のデジタル処理を受けます。

バイパスEE時は，入力ビデオ信号はVIOLA内でビデオ信号出力処理部に送られます。

* TBC: Time Base Correction

MSW ビデオ信号入力処理 (EPR-1, SDI-52, VPR-64)

MSWシリーズには，上表に示したように5系統からビデオ信号が入力されます。ただし，BKMW-104*を装着した場合はEthernet入力は使えません。

そのほかに，ビデオテスト信号がVPR-64基板で生成されます。

* BKMW-104: HD Upconverter Board

SDTI-CP 入力 (EPR-1)

SDTI-CP信号は，EPR-1基板でパラレルデータに変換され，パラレルデータからSDTIデコーダIC400でMPEGデータ*1 が抽出されます。抽出されたMPEGデータはFPGA IC900で位相調整されて，MPEG ES*2 信号として記録用のデジタル処理を受けます。

*1 MPEG データ: MPEG2 4:2:2P@ML，I ピクチャ 50 Mbps
*2 MPEG ES: MPEG Elementary Stream

SDI (SD) 入力 (SDI-52, VPR-64)

SDI信号は，SDI-52基板*1 でパラレルデータに変換され，パラレルデータからSDIデコーダIC106でSDビデオデータが抽出されます。抽出された10ビットパラレルビデオデータは，VPR-64基板のVIOLA*2 ビデオプロセッサIC701に送られます。

*1 SDI-52 基板: VPR-64 基板の子基板
*2 VIOLA: VPR-64 基板のビデオプロセッサ IC701 のニックネーム (DVW の VPR-91 基板 IC701 と同じ)

Ethernet 入力 (VN-13, IF-886) ... BKMW-E2000/E3000 装着時

VN-13基板でEthernet受信データから抽出されたMPEGデータは，IF-886基板を経由してEPR-1基板に送られます。

後述の「【9】ネットワーク入出力処理」をご覧ください。

アナログコンポーネント，コンポジット入力 (VPR-64)

入力されたアナログY/R-Y/B-Y信号およびアナログコンポジット信号は，VPR-64基板でA/D変換*1 され，PIAS*2 デジタルエンコーダIC313で10ビットのコンポーネントパラレルデータに変換されます。入力ビデオ選択で選ばれたデータがVIOLAに送られます。

*1 A/D変換: Y信号のA/Dコンバータは IC523，R-Y/B-Y信号は PIAS IC313，コンポジット信号は IC120
*2 PIAS: VPR-64 基板のデジタルエンコーダ IC313 のニックネーム (DVW VPR-91 基板の IC313 と同じ)

VIOLA によるビデオ入力信号処理 (VPR-64)

SDTI-CP入力以外のビデオ入力信号は，YとCが多重された4:2:2 10ビットパラレルデータ形式でVIOLAに入力されます。ビデオ入力信号選択で選ばれたビデオ信号に対してVIOLA，FPGA0 IC700，FPGA1 IC714が以下の処理を行います。

(1) TBC機能で本機のリファレンスクロックに同期させる
(2) セットアップ除去 (NTSCのみ)
(3) ビデオ入力信号に付加されているVITCを読み取る。記録用VITCを付加する。

処理された10ビットパラレルビデオデータは，EPR-1基板に送られ，記録用のデジタル処理を受けます。
バイパスEE時は，入力ビデオ信号はVIOLA内でビデオ信号出力部に送られます。

【2】 オーディオ信号入力処理

オーディオ入力信号

各機種のオーディオ入力信号を下表に示します。

	HDW- 2000, D2000, M2000, S2000	DVW- 2000, M2000	MSW- 2000, A2000	MSW- M2000, M2000E
SDTI (HDCAM)	CH1/2, 3/4 *1	—	—	—
SDTI-CP	—	—	CH1/2～7/8	CH1/2 to 7/8
HD-SDI	CH1/2, 3/4	—	—	—
SDI (SD)	—	CH1/2～7/8	CH1/2～7/8	CH1/2～7/8
Ethernet	—	—	CH1/2～7/8 *2	CH1/2～7/8 *2
AES/EBU	CH1/2, 3/4	CH1/2, 3/4	CH1/2～7/8	CH1/2～7/8
ANALOG	CH1～4	CH1～4	CH1～4	CH1～4
CUE	Cue	Cue	—	—

*1 HDWのSDTI (HDCAM)入力:
SDTI Interface Board HKDW-102
*2 MSWのEthernet入力:
Network Interface Board BKMW-E2000/E3000
HD Upconverter Board BKMW-104を装着するとBKMW-E2000/E3000は装着できません。

各レコーダには，上表に示したように最多で5系統からオーディオ信号が入力されます。そのほかに，内蔵のオーディオテスト信号発生器の信号も存在します。オーディオテスト信号はAPR-52基板のAPPI*オーディオプロセッサIC1425で生成されます。
キュー信号はオーディオ信号とは別途にアナログ信号のままで処理されます。

*APPI: オーディオプロセッサIC1425のニックネーム

SDTI (HDCAM), HD-SDI 入力 ... HDW レコーダ
(APR-52, DIF-134, HIF-1, HPR-1, RC-89, RX-80, SDI-63)

DIF-134 基板の SDTI IC300 で，入力された SDTI (HDCAM) 信号から CH1/2, 3/4 のデジタルオーディオデータが抽出されます。抽出されたオーディオデータは HPR-1 基板を経由して APR-52 基板に入力されます。

RX-80 基板*1 のデフォーマッタ*2 が，入力された HD-SDI 信号から CH1/2, 3/4 のデジタルオーディオデータを抽出し，基準オーディオクロックに同期させます。その後オーディオデータは HIF-1 基板を経由して APR-52 基板に入力されます。

APR-52 基板に入力されたそれぞれのオーディオデータから，IC1415, IC1416 で下記のように 4 チャンネルが選ばれます。

・ SDTI (HDCAM) 入力 CH1/2, 3/4, または HD-SDI 入力 CH1/2, 3/4 のどちらかが一括選択される

選ばれた 4 チャンネルのオーディオデータは，RC-89 基板*3 の IC100, IC101 でサンプリングレート変換後，APPI に入力されます。IC100, IC101 は，ビデオ信号と非同期，あるいはサンプリングレートが 48 kHz 以下の AES/EBU データの受け入れを可能にします。

*1 RX-80 基板: HIF-1 基板の末尾が 21 の場合は SDI-63 基板。HIF-1 基板の子基板。
*2 デフォーマッタ: SDI-63 基板の場合は Co-Processor
*3 RC-89 基板: APR-52 基板の子基板

SDI (SD) 入力 (APR-52, SDI-52, VPR-64/91) ... DVW, MSW レコーダ

SDI-52 基板の SDI デコーダ IC104 で，入力された SDI (SD) 信号から CH1/2 ～ 7/8 のデジタルオーディオデータが抽出されます。抽出されたオーディオデータは VPR 基板* を経由して APR-52 基板に入力されます。

DVW の場合は入力された 8 チャンネルの内の，4 チャンネルが記録用に使われます。APR-52 基板の APPI で選択されます。

*VPR 基板: DVW の場合は VPR-91 基板，MSW の場合は VPR-64 基板

AES/EBU 入力 (APR-52)

入力された AES/EBU デジタルオーディオデータは，APR-52 基板の AES/EBU デコーダ IC1117*1 でデコードされて APPI に入力されます。AES/EBU デコーダには，サンプリングレートコンバータ IC1200, IC1201*2 が接続されています。サンプリングレートコンバータは，ビデオ信号と非同期，あるいはサンプリングレートが 48 kHz 以下の AES/EBU 入力データも受け入れ可能にします。

*1 AES/EBU デコーダ: MSW の場合は IC1117, 1118
*2 サンプリングレートコンバータ: MSW の場合は IC1200, 1201, 1204, 1205

アナログオーディオ入力 (APR-52)

入力されたアナログオーディオ信号は，APR-52 基板の A/D コンバータ IC108, IC308 でシリアルデジタルオーディオデータに変換され，APPI に入力されます。

この A/D コンバータはアナログ Betacam 再生オーディオ信号の出力処理にも使われます。共用するために A/D コンバータの入力はリレー RY101 ～ 401 で切り換えられます。

APPI によるオーディオ入力信号処理 (APR-52)

APR-52 基板の APPI IC1425 は，上記のオーディオ入力信号に対して下記の処理を行います。

・ 入力オーディオ信号の中から，各記録チャンネルに設定された信号を選択する
・ 記録レベル制御
・ ミキシング制御
・ ミューティング処理
・ 記録チャンネルごとの遅延制御

これらの処理を施された CH1/2 および CH3/4*1 のデジタルオーディオデータが記録デジタル処理部 *2 に送られます。

*1 CH1/2 および CH3/4: MSW の場合は CH1/2 ～ CH7/8
*2 記録デジタル処理部: HDW は HPR-1 基板，DVW および MSW は EPR-1 基板

SDTI-CP 入力 (EPR-1) ... MSW レコーダ

EPR-1基板に入力されたSDTI-CP信号からSDTI IC400でCH1/2～7/8のデジタルオーディオデータが抽出されます。抽出されたオーディオデータはEPR-1基板の記録デジタル処理部に入力されます。

Ethernet 入力 (VN-13, IF-886) ... MSW レコーダ

VN-13基板でEthernet入力から抽出されたCH1/2～7/8のデジタルオーディオデータはEPR-1基板の記録デジタル処理部に入力されます。
後述の「【9】ネットワーク入出力処理」をご覧ください。

キュー入力および記録 (CUE-13, AE-31) ... HDW レコーダ, DVW

入力されたキュー信号は，CUE-13基板でゲイン調整され，AE-31基板で記録アンプ／イコライザを経て固定ヘッドで記録されます。CUE R/Pヘッドは，アナログBetacam再生時のLAU * CH2再生ヘッドです。

* LAU: Longitudinal Audio，テープの長手方向に記録されるオーディオ。固定ヘッドで記録再生される。

【3】 記録デジタル信号処理

HDW 記録デジタル信号処理 (HPR-1)

HD-SDI入力から抽出され，HPR-1基板に入力されたYおよびC各10ビットのパラレルビデオデータは，入力フィルタIC115でダウンサンプリングされ，4:2:2データから3:1:1データに変換されます。次にBRRエンコーダ*1 IC200, 204でHDCAM圧縮データに変換されます。
なお，入力フィルタ出力はHPR-1基板内の再生デジタル信号処理部にも送られます。バイパスEE用です。
このHDCAM圧縮データと，SDTI (HDCAM)入力から抽出されたHDCAM圧縮データのいずれかが選択されてECCエンコーダ*2 IC305に入力されます。
APR-52基板のAPPIから入力されたCH1/2, 3/4オーディオデータ*3もECCエンコーダに入力されます。
ECCエンコーダは，ビデオおよびオーディオデータに対して，エラー訂正符号処理およびシステムデータ多重処理を施し，記録データAC, BDおよびクロックをEQ-84基板に出力します。エラー訂正符号処理は，シャフリング，アウターエラー訂正符号付加，インナー訂正符号付加，データスクランブルの順に行われます。
なお，ECCエンコーダ入力ビデオデータは，HPR-1基板内の再生デジタル信号処理部にも送られます。SDTI (HDCAM) バイパスEE用です。

*1 BRRエンコーダ: Bit Rate Reduction Encoder
*2 ECCエンコーダ: Error Correction Code Encoder
*3 APPIから入力されたオーディオデータ: 非圧縮データです

DVW 記録デジタル信号処理 (EPR-1)

VPR-91基板のVIOLAから出力された10ビットパラレルビデオデータは，EPR-1基板のBRR/ECCエンコーダ*1 IC1103に入力されます。ここでビデオデータはフィールドシャフリングされた後，約1/2のデータレートに圧縮されます。そのあと，エラー訂正符号を付加され，トラックインターリービングされます。
APR-52基板から送られてきたCH1/2, 3/4オーディオデータ*2もIC1102を経由してIC1103に入力されます。オーディオデータはエラー訂正符号を付加され，フィールドシャフリングされます。
ここでビデオデータとオーディオデータは多重されます。
IC1103の出力はFPGA2 IC1104に入力され，P/S変換，同期データ付加後，EQ-84基板に出力されます。

*1 BRR/ECCエンコーダ: Bit Rate Reduction and Error Correction Code Encoder
*2 APPIから入力されたオーディオデータ: 非圧縮データです

MSW 記録デジタル信号処理 (EPR-1)

VPR-64基板のVIOLAから出力された10ビットパラレルビデオデータは，EPR-1基板のMIKE*1 MPEGエンコーダIC202に入力されMPEGデータ*2に圧縮されます。MPEGエンコーダは，10ビットデータを8ビットデータに丸めて圧縮を行います。MIKE出力はMFC*3 ビットストリームコンバータIC300に入力されます。

なお，MIKE出力は，FPGA IC900内のTXセレクタを経由してEPR-1基板内のSDTI-CP出力回路およびVN-13基板のEthernet出力回路にも出力されます。バイパスEE用です。

SDTI-CP入力から抽出されたMPEGデータ*4と，Ethernet入力から抽出されたMPEGデータ*5はEPR-1基板のFPGA IC900に入力されます。この内のいずれかが，FPGA内部のRXセレクタで選択され，これもMFCに入力されます。

MFCは，テープに記録する順にデータを並べ替え*6ます。

MFC出力とRXセレクタ出力は，FPGA内のENCセレクタでいずれかが選択されてEVE*7 ECCエンコーダ*8 IC301に入力されます。

APR-52基板から入力されたオーディオデータ*9，SDTI-CP入力から抽出されたオーディオデータおよびEthernet入力から抽出されたオーディオデータの内のいずれかがEPR-1基板のIC718, 712で選択され，これもEVEに入力されます。

EVEは，ビデオおよびオーディオデータに対して，エラー訂正符号処理およびシステムデータ多重処理を施し，記録データAC, BDおよびクロックをEQ-84基板に出力します。エラー訂正符号処理は，シャフリング，アウターエラー訂正符号付加，インナー訂正符号付加，データスクランブルの順に行われます。

なお，MFC出力とRXセレクタ出力のいずれかがFPGA内のCONVセレクタで選択され，DPR-229/155基板の再生デジタル信号処理ブロックに出力されます。バイパスEE用です。

*1 MIKE: MPEG エンコーダ IC202 のニックネーム
*2 MPEG データ: MPEG2 4:2:2P@ML, I ピクチャ 50 Mbps
*3 MFC: ビットストリームコンバータ IC300 のニックネーム
*4 SDTI-CP 入力から抽出 ...: EPR-1 基板の IC400
*5 Ethernet 入力から抽出 ...: VN-13 基板出力。IF-886 基板経由。
*6 データの並べ替え: DCT 係数の並べ替え
*7 EVE: ECC エンコーダ IC301 のニックネーム
*8 ECC エンコーダ: Error Correction Code エンコーダ
*9 オーディオデータ: 非圧縮データです

SDI (SD) 出力 (HIF-1, SDI-52, VPR-64/91)

SDI (SD) 出力用の信号は再生するフォーマットによって処理経路が異なります。

- HDCAM フォーマット再生 ... HDW
  HIF-1 基板の IC600 で HD ビデオデータが SD ビデオデータにダウンコンバートされます。ダウンコンバートされた各 10 ビットの SD Y データと SD C データは，VPR 基板の VIOLA に入力されます。
- Digital Betacam, MPEG IMX あるいは Betacam SX フォーマット再生 ... HDW-D/M/S, DVW, MSW
  DPR 基板で復元された非圧縮 10 ビットの SD ビデオデータが，VPR 基板の VIOLA に入力されます。
- アナログ Betacam フォーマット再生 ... HDW-M/S/A, DVW-M, MSW-A/M
  DM-123 基板の TBC ブロックから 10 ビットの SD ビデオデータが，VPR 基板の VIOLA に入力されます。

VIOLA は，入力された SD ビデオデータに対して以下の処理を行います。

- メモリを利用した Field Jog/VAR 処理 ... MPEG IMX あるいは Betacam SX フォーマット再生の場合
- フリーズ画をメモリ
- H/V ブランキング
- Y ADD および ESR
- 再生 VITC 読み取り

VIOLA から 10 ビットの SD ビデオデータが出力され，APR-52 基板から送られてきた CH1/2～CH7/8 のオーディオデータとともに，SDI-52 基板に入力されます。SDI-52 基板は，ビデオ／オーディオデータを 10 ビットパラレル SDI データに変換後，シリアルデータに変換して SDI OUT 1, 2, 3 コネクタから SD SDI データを出力します。SDI OUT 3 にはキャラクタがスーパーインポーズされます。

アナログコンポーネントおよびコンポジットビデオ出力 (VPR-64/91)

10 ビットコンポーネントビデオデータが VIOLA から出力され，NICE*1 デジタルエンコーダ IC902 に入力されます。NICE は，10 ビットコンポーネントビデオデータを D1 データ*2 と D2 データ*3 に変換します。D1 データは IC920 で D/A 変換されて ANALOG COMPONENT Y/R-Y/B-Y OUT コネクタから出力されます。

D2 データは NICE 内部で D/A 変換されて ANALOG COMPOSITE VIDEO OUT 1, 2, 3 コネクタから出力されます。OUT 3 には IC926 でキャラクタがスーパーインポーズされます。

*1 NICE: VPR 基板のデジタルエンコーダ IC902 のニックネーム
*2 D1 データ: 4:2:2 コンポーネントデジタルデータ
*3 D2 データ: 4fsc コンポジットデジタルデータ

【8】 オーディオ信号出力処理

オーディオ出力信号

各機種のオーディオ出力信号を下表に示します。

	HDW シリーズ	DVW シリーズ	MSW-	
			2000, A2000	M2000, M2000E, M2100, M2100E
SDTI (HDCAM)	CH1/2, CH3/4*1	—	—	—
SDTI-CP	—	—	CH1/2～CH7/8	CH1/2～CH7/8
HD-SDI	CH1/2～CH7/8	CH1/2～CH7/8*2	CH1/2～CH7/8*2	CH1/2～CH7/8*2
SDI (SD)	CH1/2～CH7/8	CH1/2～CH7/8	CH1/2～CH7/8	CH1/2～CH7/8
Ethernet	—	—	CH1/2～CH7/8*3	CH1/2～CH7/8*3
AES/EBU	CH1/2～CH7/8	CH1/2～CH7/8	CH1/2～CH7/8	CH1/2～CH7/8
ANALOG AUDIO	CH1～CH4	CH1～CH4	CH1～CH4	CH1～CH4
CUE	Cue	Cue	—	Cue

*1 HDW の SDTI (HDCAM)出力: SDTI Interface Board HKDW-102
*2 DVW/MSW の HD-SDI 出力: HD Upconverter Board BKMW-104*4
*3 MSW の Ethernet 出力: Network Interface Board BKMW-E2000, BKMW-E3000*4
*4 BKMW-104, BKMW-E2000, BKMW-E3000: いずれか一方しか MSW に装着できません。

オーディオ再生信号 (AE-31, APR-52, CUE-13, DPR-155/229)

- HDCAM, Digital Betacam, MPEG IMX あるいは Betacam SX フォーマットで再生されたオーディオデータは DPR 基板で分離された後，APR-52 基板の APPI *1 IC1425 に入力されます。
- 記録時のコンフィデンスヘッド再生データも DPR 基板で分離された後，APR-52 基板の APPI に入力されます。
- アナログ Betacam フォーマットで再生されたオーディオ信号*2 は，APR-52 基板の IC108, 308 で A/D 変換されて APPI に入力されます。
- キュー再生信号は，AE-31 基板でイコライズ後，CUE-13 基板の出力アンプを経て CUE OUT コネクタから出力されます。また，モニタ出力用に APR-52 基板に送られます。

*1 APPI: オーディオプロセッサ IC1425 のニックネーム
*2 アナログ Betacam オーディオ信号: CH1, 2 = LAU, CH3, 4 = AFM

APPI による再生オーディオ信号処理 (APR-52)

APR-52 基板の APPI はキュー信号以外の再生オーディオ信号に対して以下の処理を行います。

- 再生 /EE の切り換え
- 出力レベル調整
- 遅延調整
- ミューティング
- アナログオーディオ出力チャンネルの選択
- モニタ／ヘッドフォン出力チャンネルの選択

SDTI (HDCAM), HD-SDI, SDI (SD)および Ethernet 出力 (APR-52)

APPIから出力されたCH1/2～CH7/8のSDI用オーディオデータが下記の各部に送られ，ビデオデータとともに出力されます。HDCAM フォーマット再生の場合は，RC-89 基板*1 でサンプリングレートが変換されて送り出されます。

- SDTI (HDCAM): HPR-1 基板経由で DIF-134 基板の SDTI エンコーダへ
- HD-SDI: HIF-1 基板経由で 2 枚の TX-96 基板*2 の HD SDI エンコーダへ
- SDTI-CP: EPR-1 基板の SDTI エンコーダへ
- SDI (SD): VPR 基板経由で SDI-52 基板の SDI エンコーダへ
- Ethernet: EPR-1 基板および IF-886 基板経由で VN-13 基板へ

*1 RC-89 基板: HDW 用 APR-52 基板の子基板
*2 2 枚の TX-96 基板: HIF-1 基板の末尾が 21 の場合は 1 枚の SDI-63 基板

AES/EBU 出力 (APR-52)

APPIから出力されたCH1/2～CH7/8のオーディオデータがIC1117, 1118でAES/EBUデータに変換されてAES/EBU OUT CH1/2～CH7/8コネクタから出力されます。

アナログオーディオ出力 (APR-52)

APPIから出力されたオーディオデータが，デジタルオーディオフィルタでオーバーサンプリング処理された後，D/A 変換，ディエンファシス処理を経て ANALOG AUDIO OUT CH1～4 コネクタから出力されます。

モニタおよびヘッドフォン出力 (APR-52, HP-101)

APPIから出力されたモニタ用データが，デジタルオーディオフィルタでオーバーサンプリング処理後，D/A 変換，ディエンファシス処理を経てキュー再生信号とミックスされて MONITOR OUT L, R コネクタから出力されます。
同じ信号が HP-101 基板に送られ，出力アンプを経て PHONES ジャックに出力されます。

キュー出力 (AE-31, CUE-13)

前述のようにAE-31 基板，CUE-13 基板でイコライズ，増幅されたキュー再生信号はCUE OUT コネクタから出力されます。また，モニタ出力用に APR-52 基板に送られます。

【9】 ネットワーク入出力処理

ネットワーク入出力処理 ... MSW (BKMW-E2000)
(IF-885, IF-886, VN-13)

ネットワーク入出力の処理はVN-13, IF-885, IF-886基板で行われます。VN-13基板がメイン基板です。IF-885基板はEthernetコネクタ取り付け基板です。IF-886基板はビデオ／オーディオデータのバッファです。

注意

文中の（）内は，VN-13基板の末尾が11の場合のRef No.です。

ビデオ／オーディオ信号処理

MXF*ファイルフォーマットのパッキング／アンパッキングおよび送受信データの同期／非同期変換処理を行います。

* MXF: Material Exchange Format

・送信

送信時は，再生MPEGビデオデータと再生オーディオデータが，EPR-1基板からIF-886基板経由でVN-13基板に入力されます。ビデオ／オーディオデータはビデオ／オーディオプロセッサIC412 (IC412とIC501) を経由してIC601 (IC603) に送られます。IC601 (IC603) はビデオ／オーディオデータをバッファメモリIC608～IC611 (IC1007, IC1008) に書き込みます。その後，MXFファイルフォーマットに従ってパッキングします。

・受信

受信時は，バッファメモリ内のMXFファイルデータをアンパッキングしてデータを読み出します。読み出しのタイミングはCPUから制御されます。読み出されたデータは，送信時とは逆のプロセスにより，IC601 (IC603) からビデオ／オーディオプロセッサを経由して，EPR-1基板の記録デジタル信号処理ブロックに送られます。

・ファイルモニタ

ファイルモニタ (e-monitor) 時は，VPR基板からのベースバンドビデオデータとAPR-52基板からのオーディオデータがビデオ／オーディオプロセッサIC412に入力されます。ベースバンドビデオデータは，ビデオ／オーディオプロセッサとSRAM IC413でラスター変換され，IC415でJPEGデータに変換された後，IC601 (IC603)に入力されます。オーディオデータは，IC603 (IC416) でサンプリングレートを48 kHzから8 kHzに変換されます。このように処理されたビデオ／オーディオデータは，ファイルモニタ用としてIC601 (IC603) によってパッキングされます。

TCP/IP処理

データ送受信におけるTCP/IPパケット処理を行います。

データ送信時は，バッファメモリに書き込まれたデータをCPU制御とIC601 (IC603) の内部処理によりパケット化します。パケット化されたデータは，IC601 (IC603) 内部のMACを経由してIC701 (IC1101) でPhysical Layerの処理を経てEthernetコネクタから出力されます。

データ受信時は，送信時と逆のプロセスにより，TCP/IPパケットから受信データが抽出され，バッファメモリに書き込まれます。

CPU

CPU IC1は，TCP/IP処理を制御するとともに，システムコントロールCPUとの通信，ビデオ／オーディオデータ処理を制御します。

CPUとIC601 (IC603) はPCIブリッジIC2を介して専用のデータバスで接続されています。

ネットワーク入出力処理 ... MSW (BKMW-E3000)
(IF-885, IF-886, VN-13, DSP-109)

ネットワーク入出力の処理はVN-13, DSP-109, IF-885, IF-886基板で行われます。VN-13基板がメイン基板です。DSP-109基板はプロキシ用基板です。IF-885基板はEthernetコネクタ取り付け基板です。IF-886基板はビデオ／オーディオデータのバッファです。

ビデオ／オーディオ信号処理

MXF*ファイルフォーマットのパッキング／アンパッキングおよび送受信データの同期／非同期変換処理を行います。

* MXF: Material Exchange Format

・送信

送信時は，再生MPEGビデオデータと再生オーディオデータが，EPR-1基板からIF-886基板経由でVN-13基板に入力されます。ビデオ／オーディオデータはビデオ／オーディオプロセッサIC412を経由してIC601に送られます。IC601はビデオ／オーディオデータをバッファメモリIC608～IC611に書き込みます。その後，MXFファイルフォーマットに従ってパッキングします。

・受信

受信時は，バッファメモリ内のMXFファイルデータをアンパッキングしてデータを読み出します。読み出しのタイミングはCPUから制御されます。読み出されたデータは，送信時とは逆のプロセスにより，IC601からビデオ／オーディオプロセッサを経由して，EPR-1基板の記録デジタル信号処理ブロックに送られます。

・ファイルモニタ

ファイルモニタ (e-monitor) 時は，VPR基板からのベースバンドビデオデータとAPR-52基板からのオーディオデータがビデオ／オーディオプロセッサIC412に入力されます。ベースバンドビデオデータは，ビデオ／オーディオプロセッサとSRAM IC413でラスター変換され，IC415でJPEGデータに変換された後，IC601に入力されます。オーディオデータは，IC603でサンプリングレートを48 kHzから8 kHzに変換されます。このように処理されたビデオ／オーディオデータは，ファイルモニタ用としてIC601によってパッキングされます。

プロキシ送信

プロキシ送信時は，VPR基板からベースバンドビデオデータとAPR-52基板からのオーディオデータがVN-13基板を経由し，DSP-109基板上のIC1に入力されます。ベースバンドビデオデータはIC1でフィルタ処理された後，IC2でMPEG4エンコードされ，IC1にもどります。オーディオデータはIC201～204でサンプリングレートを48 kHzから8 kHzに変換されます。このように処理されたビデオ／オーディオデータはIC1でクリップ化された後，VN-13基板上のIC601にてパッキングされます。

TCP/IP 処理

データ送受信におけるTCP/IPパケット処理を行います。

データ送信時は，バッファメモリに書き込まれたデータをCPU制御とIC601の内部処理によりパケット化します。パケット化されたデータは，IC601内部のMACを経由してIC701でPhysical Layerの処理を経てEthernetコネクタから出力されます。

データ受信時は，送信時と逆のプロセスにより，TCP/IPパケットから受信データが抽出され，バッファメモリに書き込まれます。

CPU

CPU IC1は，TCP/IP処理を制御するとともに，システムコントロールCPUとの通信，ビデオ／オーディオデータ処理を制御します。
CPUとIC601はPCIブリッジIC2を介して専用のデータバスで接続されています。

【10】同期処理

HDWシリーズ (HIF-1, VPR-64)

記録時は，記録信号に選択されたHD-SDIあるいはSDTI (HDCAM) 入力ビデオデータから抽出されたF, V, Hおよび74 MHzクロックがHIF-1基板のTG* IC702に入力され，それに同期したF, V, Hおよび各種クロックが生成されます。
再生時は，REF INコネクタに入力されたHD SYNC信号から分離された信号がHIF-1基板のTGに入力され，それに同期したF, V, Hおよび各種クロックが生成されます。REF INコネクタに信号が入力されていない場合はHIF-1基板のTGで作られる74 MHzが基準になります。
また，SDビデオ信号処理用に，HIF-1基板のTGからVPR基板のTG IC1226に同期信号が送られます。VPR基板のTGは，DVW/MSWシリーズの項 (後述) に挙げたクロックを生成します。

* TG: Timing Generator

サーボ基準信号SV REFは，入力ビデオ信号から生成されたタイミング，あるいは内部基準信号のタイミングから生成されます。VPR-64基板のVIOLAおよびFPGA0で，VTRの動作状態に応じて選択／生成されます。内部基準信号はVPR-64基板の27 MHz水晶発振器から作られます。
SV REF信号は，SS-89基板のサーボCPUに送られます。

DVWおよびMSWシリーズ (HIF-1, VPR-64/91)

VPR基板のTG IC1226を核にして基準クロックが生成されます。
記録時は，記録信号に選択されたビデオ信号を基準として下記の3種類のクロックが生成されます。
再生時は，REF VIDEO INコネクタに入力されたアナログコンポジット信号が基準になります。REF VIDEO INコネクタに信号が入力されていない場合はVPR基板の27 MHz水晶発振器が基準になります。

1. コンポジット信号に対する4fscクロック (NTSC, PAL独立)
2. ビデオ信号処理用の27 MHz基準クロック
3. オーディオ信号処理用の24.58 MHz基準クロック

HD Upconverter Board BKMW-104を装着した場合は，REF VIDEO INコネクタに入力されたHD SYNC信号から分離された信号がHIF-1基板のTGに入力され，HDWシリーズと同じ動作をします。
サーボ基準信号の生成はHDWの場合と同じです。

【11】システムコントロール

システムコントロールCPU (SS-89)

さまざまな記録／再生フォーマットに対応するため，専用の1チップCPU IC1106を使用しています。下記のように8ビットパラレル通信およびシリアル通信で各部と通信し制御を行います。
LTCタイムコードの処理機能も内蔵しています。

(1) 8ビットパラレル通信 (SS BUS)
ビデオ／オーディオ信号処理基板, FP-133基板のメモリースティック／ICカードインターフェース回路等およびSS-89基板内のサーボCPUと通信します。

(2) シリアル通信
下記の10系統で各部と通信します。

- SS SYPS 0
  ビデオ出力信号にスパーインポーズするキャラクタデータをVPR基板とHIF-1基板に送ります。
- SS SYPS 2, 3
  ビデオ／オーディオ信号処理基板にモード情報や調整データを送ります。
- SS SYPS 1
  CP-371基板のCP CPUと通信し，50ピンPARALLEL REMOTEおよび15ピンVIDEO CONTROLのデータを送受信します。
- SS TF
  DIO-65基板のTele-File CODECとのデータ送受信を行います。
- SS KEY RX/TX
  コントロールパネルから操作データを受信し，ステータスデータを送信します。
- SS 9PIN 1 RX/TX
  REMOTE 1 INコネクタとデータを送受信します。
- SS 9PIN 2 RX/TX
  REMOTE 1 OUTコネクタとデータを送受信します。
- SS COM RX/TX
  RS-232Cコネクタとデータを送受信します。
- SS VA RX/TX
  HDWの9ピンVIDEO CONTROLコネクタとデータを送受信します。

周辺回路 (コントロールパネル, CP-371, DIO-65, FP-133, FP-134, SE-606/A)

(1) CP-371基板
CPU IC706を介して, SS-89基板のシステムコントロールCPUとの間で50ピンPARALLEL REMOTEおよび15ピンVIDEO CONTROLのデータを送受信します。

(2) DIO-65，SE-606/A基板
- DIO-65基板: Tele-File CODEC
- SE-606/A基板: Tele-File用ループアンテナ

(3) FP-133, FP-134基板
FP-133基板
- メモリースティック／ICカードインターフェース
- EEPROM IC114, 115
  セットアップメニューおよび50ピンPARALLEL REMOTEの設定データの保存
- NVRAM IC111
  パネル設定，VTRエラーログ，カレンダクロックの保存
- REMOTE EJECTスイッチ/LED，FORMAT INDICATOR LEDとの入出力

FP-134基板
・ICカード入出力バッファ

注意

HDW-D2000/S2000ではICカードは使えません。FP-134基板もありません。

(4) コントロールパネル

下記の機能を処理します。

・操作キーおよびそれに付随するランプ制御
・サーチダイヤル
・マルチファンクションコントロール制御
・ファンクションページ切り替えキー (up/down) 制御
・オーディオ入力選択，入力ミックス状況，モニタ状況，非オーディオデータなどの表示
・オーディオレベルボリューム (REC/PB各8チャンネル)
・メータスケール (Peak 0, Ref = 0, Fine) の切り替え
・タイムコードなどの表示

【12】サーボ (DR-414/508, DT-47, PTC-102, SS-89)

SS-89基板のサーボCPU IC103がサーボのメイン回路です。DR基板*にサブのDR CPU IC100があります。サーボCPUは，システムコントロールCPUと8ビットパラレルデータで通信します。サーボCPUとDR CPUはシリアルデータで通信します。

＊DR基板: DR-414基板からDR-508基板に変わりました。機能は同じです。

サーボの基準信号SV REFはVPR基板で生成されてサーボCPUに入力されます。記録CTL信号は，サーボCPUで生成され，DR基板のCTL記録アンプで記録されます。再生CTL信号は，DR基板で増幅されてサーボCPUに入力されます。
サーボCPUは，DR基板のモータドライバを制御してドラム，キャプスタン，Sリール，Tリール，スレッディングの各モータを駆動します。各モータからは，FG (ドラムモータはPGも) 信号がサーボCPUにフィードバックされます。
ドラムモータのFGアンプ，PGアンプはDR基板にあります。キャプスタンモータ，Sリールモータ，TリールモータのFGアンプはSS-89基板にあります。スレッディングモータのFGアンプはPTC-102基板にあります。

その他のモータやソレノイドは，DR CPUで制御されます。また，カセットサイズやカセットダウン等の各種センサ信号は，DR CPUに入力されます。

DTヘッドの制御回路もSS-89基板にあります。SS-89基板で生成されたDTヘッドのバイモルフ駆動信号は，DT-47基板のドライバでバイモルフを駆動します。DTヘッドのストレインゲージ信号は，DT-47基板で増幅されてDT制御回路にフィードバックされます。また，DTヘッド再生RF信号のエンベロープ信号が，EQ-84基板からDT制御回路にフィードバックされます。テープ速度やテープ走行方向に応じた制御はサーボCPUから受けます。

Section 3
Circuit Description and Block Diagrams

Circuit Description

This circuit description is provided for the following categories. It would be helpful to refer to the Overall Block Diagram for better understanding of this circuit description.

1. Video Signal Input Processing
2. Audio Signal Input Processing
3. Digital Signal Processing for Recording
4. RF Processing
5. Analog Betacam Playback Processing
6. Digital Signal Processing for Playback
7. Video Signal Output Processing
8. Audio Signal Output Processing
9. Network Input/Output Processing
10. Synchronization
11. System Control
12. Servo

Recording/Playing back Formats

The following table shows recording and playing back formats of each model.

Model	HDW-					DVW-		MSW-			
	2000	D2000	M2000/P	S2000/P	M2100/P	2000/P	M2000/P	2000	A2000/P	M2000/P M2000E/P	M2100/P M2100E/P
	Recorder				Player	Recorder		Recorder			Player
Recording format	HD	HD	HD	HD	—	DB	DB	IMX	IMX	IMX	—
Playing back format	HD	HD	HD	HD	HD	—	—	—	—	—	—
	—	DB	DB	—	DB	DB	DB	—	—	DB	DB
	—	IMX	IMX	—	IMX	—	IMX	IMX	IMX	IMX	IMX
	—	—	SX	SX	SX	—	SX	SX	SX	SX	SX
	—	—	AB	AB*	AB	—	AB	—	AB	AB	AB

* Analog Betacam playback by HDW-S2000/P: AFM playback is not available.

HD = HDCAM, DB = Digital Betacam, IMX = MPEG IMX, SX = Betacam SX, AB = Analog Betacam/SP

1. Video Signal Input Processing

Video Input Signals

The following table shows video input signals of each model.

	HDW- 2000, D2000, M2000/P, S2000/P	DVW- 2000/P, M2000P	MSW- 2000, A2000/P, M2000/P, M2000E/P
SDTI (HDCAM)	HDCAM*1	—	—
SDTI-CP	—	—	MPEG2 4:2:2P@ML
HD-SDI	HD 4:2:2	—	—
SDI (SD)	—	SD 4:2:2	SD 4:2:2
Ethernet	—	—	MPEG 4:2:2P@ML*2
ANALOG COMPONENT	—	SD Y/R-Y/B-Y	SD Y/R-Y/B-Y
ANALOG COMPOSITE	—	NTSC or PAL	NTSC or PAL

*1 SDTI (HDCAM) Input for HDW:
SDTI Interface Board HKDW-102
*2 Ethernet Input for MSW:
Network Interface Board BKMW-E2000/E3000
BKMW-E2000/E3000 is incompatible with HD Upconverter Board BKMW-104.

HDW Video Signal Input Processing (DIF-134, HIF-1, HPR-1, RX-80, SDI-63)

Regarding the HDW series, the two video signals are input as shown in the table.
In addition, video signals are generated by the built-in video test signal generator. The input filter IC115 on the HPR-1 board generates video test signals for recording, and the output filter IC802 generates those for playback.

SDTI (HDCAM) Input (DIF-134, HPR-1) ... When HKDW-102 is installed

The input SDTI (HDCAM) signal is converted to parallel data on the DIF-134 board*. Compressed HDCAM data is extracted from the parallel data by the SDTI decoder IC300. The compressed HDCAM data is phase-adjusted by the FPGA IC400, and is then sent to the HPR-1 board where an error correction code is added to the data for recording.

* DIF-134 board: Piggybacked on HPR-1 board

HD-SDI Input (HIF-1, HPR-1, RX-80, SDI-63)

The input HD-SDI signal is converted to parallel data on the RX-80 board*1. HD video data is extracted from the parallel data by the deformatter*2 IC200 and IC400. The extracted 10-bit Y and 10-bit C parallel video data are sent to the HPR-1 board via the HIF-1 board for digital processing for recording.

*1 RX-80 board: SDI-63 board for HIF-1 board with suffix 21. Piggybacked on HIF-1 board
*2 Deformatter: Co-processor IC101 when SDI-63 board is used

DVW Video Signal Input Processing (EPR-1, SDI-52, VPR-91)

Regarding the DVW series, the three video signals are input as shown in the table.
In addition, video test signals are generated on the VPR-91 board.

SDI (SD) Input (SDI-52, VPR-91)

The input SDI signal is converted to parallel data on the SDI-52 board*1. SD video data is extracted from the parallel data by the SDI decoder IC106. The extracted 10-bit parallel video data is sent to "VIOLA"*2 video processor IC701 on the VPR-91 board.

*1 SDI-52 board: Piggybacked on VPR-91 board
*2 VIOLA: Nickname of video processor IC701 on VPR-91 board

Analog Component/Composite Video Inputs (VPR-91)

Analog component signals (Y, R-Y, and B-Y) and analog composite signal are converted to digital signals*1 on the VPR-91 board, and are then further converted to 10-bit component parallel data by "PIAS"*2 digital encoder IC313. The data selected by the input video signal selection is sent to VIOLA.

*1 A/D converters: IC523 for Y signal, PIAS IC313 for R-Y and B-Y signals, IC120 for composite signal
*2 PIAS: Nickname of digital encoder IC313 on VPR-91 board

Video Input Signal Processing by VIOLA (VPR-91)

Video signals are input to VIOLA in the 4:2:2 10-bit parallel data format with Y and C signals multiplexed. VIOLA, FPGA0 IC700, and FPGA1 IC714 perform the following processing for the video signal selected by the input video signal selection.

(1) Synchronize the video signal with the reference clock of the unit using the TBC* function.
(2) Reject the setup (NTSC only).
(3) Read the VITC attached to the video input signal and add a VITC for recording.

The 10-bit parallel video data from VIOLA is sent to the EPR-1 board for digital processing for recording.
The input video signal is transferred to the video signal output processing block in VIOLA in the case of bypass EE.

* TBC: Time Base Correction

MSW Video Signal Input Processing (EPR-1, SDI-52, VPR-64)

Regarding the MSW series, the five video signals are input as shown in the table.
When BKMW-104* is installed, however, the Ethernet input is not available.
In addition, video test signals are generated on the VPR-64 board.

* BKMW-104: HD Upconverter Board

SDTI-CP Input (EPR-1)

The SDTI-CP signal is converted to parallel data on the EPR-1 board. MPEG data*1 is extracted from the parallel data by the SDTI decoder IC400. The extracted MPEG data is phase-adjusted by the FPGA IC900, and receives digital processing for recording as MPEG ES*2 signal.

*1 MPEG data: MPEG2 4:2:2P@ML I picture 50 Mbps
*2 MPEG ES: MPEG Elementary Stream

SDI (SD) Input (SDI-52, VPR-64)

The SDI signal is converted to parallel data on the SDI-52 board*1. SD video data is extracted from the parallel data by the SDI decoder IC106. The extracted 10-bit parallel data is sent to "VIOLA"*2 video processor IC701 on the VPR-64 board.

*1 SDI-52 board: Piggybacked onVPR-64 board
*2 VIOLA: Nickname of video processor IC701 on VPR-64 board (same as IC701 on VPR-91 board for DVW)

Ethernet Input (VN-13, IF-886) **... When BKMW-E2000/E3000 is installed**

The MPEG data extracted from the Ethernet receive data on the VN-13 board is sent to the EPR-1 board via the IF-886 board.
Refer to "9. Network Input/Output Processing" described later.

Analog Component/Composite Video Inputs (VPR-64)

Analog input signals (Y, R-Y, and B-Y) and analog composite signal are converted to digital signals*1 on the VPR-64 board, and are then further converted to 10-bit parallel component data by "PIAS"*2 digital encoder IC313. The data selected by the input video signal selection is sent to VIOLA.

*1 A/D converters: IC523 for Y signal, PIAS IC313 for R-Y and B-Y signals, IC120 for composite signal
*2 PIAS: Nickname of digital encoder IC313 on VPR-64 board (Same as IC313 on VPR-91 board for DVW)

Video Input Signal Processing by VIOLA (VPR-64)

Video signals except for SDTI-CP are input to VIOLA in the 4:2:2 10-bit parallel data format with Y and C signals multiplexed. VIOLA, FPGA0 IC700, and FPGA1 IC714 perform the following processing for the video signal selected by the input video signal selection.

(1) Synchronize the video signal with the reference clock of the unit using the TBC function.
(2) Reject the setup (NTSC only).
(3) Read the VITC attached to the video input signal and add a VITC for recording.

The processed 10-bit parallel video data is sent to the EPR-1 board for digital processing for recording.
The input video signal is transferred to the video signal output processing block in VIOLA in the case of bypass EE.

2. Audio Signal Input Processing

Audio Input Signals

The following table shows audio input signals of each model.

	HDW- 2000, D2000, M2000/P, S2000/P	DVW- 2000/P, M2000/P	MSW-	
			2000, A2000/P	M2000/P, M2000E/P
SDTI (HDCAM)	CH1/2, 3/4 *1	—	—	—
SDTI-CP	—	—	CH1/2 to 7/8	CH1/2 to 7/8
HD-SDI	CH1/2, 3/4	—	—	—
SDI (SD)	—	CH1/2 to 7/8	CH1/2 to 7/8	CH1/2 to 7/8
Ethernet	—	—	CH1/2 to 7/8 *2	CH1/2 to 7/8 *2
AES/EBU	CH1/2, 3/4	CH1/2, 3/4	CH1/2 to 7/8	CH1/2 to 7/8
ANALOG	CH1 to 4	CH1 to 4	CH1 to 4	CH1 to 4
CUE	Cue	Cue	—	—

*1 SDTI (HDCAM) Input for HDW:
SDTI Interface Board HKDW-102
*2 Ethernet Input for MSW:
Network Interface Board BKMW-E2000/E3000
BKMW-E2000/E3000 is incompatible with HD Upconverter Board BKMW-104.

Up to five audio signals are input into each recorder as shown in the table. In addition, audio test signals are generated by the APPI* audio processor IC1425 on the APR-52 board.
The cue signal is processed without being converted to digital signals independently from audio signals.

* APPI: Nickname of audio processor IC1425

SDTI (HDCAM), HD-SDI Inputs ... HDW Recorder

(APR-52, DIF-134, HIF-1, HPR-1, RC-89, RX-80, SDI-63)
The CH1/2, 3/4 digital audio data are extracted from the input SDTI (HDCAM) signal by the SDTI IC300 on the DIF-134 board. The extracted audio data are sent to the APR-52 board via the HPR-1 board. The deformatter*1 on the RX-80 board*2 extracts the CH1/2, 3/4 digital audio data from the input HD-SDI signal, and then synchronizes the data with the reference audio clock. The audio data are then sent to the APR-52 board via the HIF-1 board.
IC1415 and IC1416 select the following four channels collectively from the respective audio data sent to the APR-52 board.
• Either SDTI (HDCAM) input CH1/2, 3/4 or HD-SDI input CH1/2, 3/4
The sampling rate of the selected 4-channel audio data is converted by IC100 and IC101 on the RC-89 board*3, and the audio data is then input into the APPI. IC100 and IC101 enable to accept the AES/EBU data that is asynchronous with the video signal or whose sampling rate is lower than 48 kHz.

*1 Deformatter: Co-processor when SDI-63 board is used
*2 RX-80 board: SDI-63 board for HIF-1 board with suffix 21. Piggybacked on HIF-1 board
*3 RC-89 board: Piggybacked on APR-52 board

SDI (SD) Input (APR-52, SDI-52, VPR-64/91) ... DVW, MSW Recorder

The CH1/2 to 7/8 digital audio data are extracted from the input SDI (SD) signal by the SDI decoder IC104 on the SDI-52 board. The extracted audio data are sent to the APR-52 board via the VPR board*. The DVW series uses four channels for recording out of the input eight channels. The APPI on the APR-52 board selects the four channels.

* VPR board: VPR-91 board for DVW series, VPR-64 board for MSW series

AES/EBU Inputs (APR-52)

The input AES/EBU digital audio data are decoded by the AES/EBU decoder IC1117 *1 on the APR-52 board. Sampling rate converters IC1200 and IC1201 *2 are connected to the AES/EBU decoder. IC1200 and IC1201 enable to accept the input AES/EBU data that is asynchronous with the video signal or whose sampling rate is lower than 48 kHz.

*1 AES/EBU decoder: IC1117 and 1118 for MSW series
*2 Sampling rate converter: IC1200, 1201, 1204, and 1205 for MSW series

Analog Audio Input (APR-52)

Input analog audio signals are converted to serial digital audio data by the A/D converters IC108 and IC308 on the APR-52 board, and are then input into the APPI. These A/D converters are also used for the output processing of analog Betacam playback audio signals. For this reason, the inputs of the A/D converters are switched by the relays RY101 to 401.

Audio Input Signal Processing by APPI (APR-52)

The APPI IC1425 on the APR-52 board performs the following processing for the audio input signals described above.

- Select signals set for each recording channel from audio input signals.
- Recording level control
- Mixing control
- Muting control
- Delay control for each recording channel

These processed CH1/2 and CH3/4 *1 digital audio data are sent to the digital processing block for recording *2.

*1 CH1/2 and CH3/4: CH1/2 to CH7/8 in the case of MSW
*2 Digital processing block for recording: HPR-1 board for HDW, EPR-1 board for DVW and MSW

SDTI-CP Input (EPR-1) **... MSW Recorder**

The CH1/2 to 7/8 digital audio data are extracted from the input SDTI-CP signal by the SDTI IC400 on the EPR-1 board. The extracted audio data are transferred to the digital processing block for recording on the same board.

Ethernet Input (VN-13, IF-886) **... MSW Recorder**

The CH1/2 to 7/8 digital audio data extracted from the Ethernet input on the VN-13 board are transferred to the digital processing block for recording on the EPR-1 board.
Refer to "9. Network Input/Output Processing" described later.

Cue Input and Recording (CUE-13, AE-31) **... HDW Recorder, DVW**

The gain of the input cue signal is adjusted on the CUE-13 board, and the signal is then recorded by the stationary head through the recording amplifier and the equalizer on the AE-31 board. The CUE R/P head is the LAU * CH2 playback head used for analog Betacam playback.

* LAU: Longitudinal Audio recorded in the longitudinal direction of tape (recorded and played back by a stationary head)

3. Digital Signal Processing for Recording

HDW Digital Signal Processing for Recording (HPR-1)

The 10-bit Y and 10-bit C parallel video data that are extracted from the input HD-SDI signal and are sent to the HPR-1 board are down-sampled by the input filter IC115, and are then converted from 4:2:2 data to 3:1:1 data. The converted data is further converted to compressed HDCAM data by the BRR encoders *1 IC200 and IC204.

The output data of the input filter is also transferred to the digital signal processing block for playback on the HPR-1 board for bypass EE.

Either this compressed HDCAM data or the compressed HDCAM data extracted from the input SDTI (HDCAM) signal is selected, and the selected data is then input into the ECC encoder *2 IC305.

The CH1/2 and 3/4 audio data *3 sent from the APPI on the APR-52 board are also input into the ECC encoder.

The ECC encoder applies error correction code processing and system data multiplexing to the video and audio data, and outputs recording data AC and BD as well as clock to the EQ-84 board. The error correction code processing proceeds in the order of shuffling, outer error correction code addition, inner error correction code addition, and data scrambling.

The video data that is input into the ECC encoder is also sent to the digital signal processing block for playback on the HPR-1 board for SDTI (HDCAM) bypass EE.

*1 BRR encoder: Bit Rate Reduction encoder
*2 ECC encoder: Error Correction Code encoder
*3 Audio data: Not compressed

DVW Digital Signal Processing for Recording (EPR-1)

The 10-bit parallel video data that is output from VIOLA on the VPR-91 board is sent to the BRR/ECC encoder *1 IC1103 on the EPR-1 board where the data is field-shuffled and is then compressed to approximately 1/2 data rate. Further, error correction code is added and track interleaving is applied to the data.

The CH1/2 and 3/4 audio data *2 sent from the APPI on the APR-52 board pass through IC1102 and are input into IC1103 where error correction code is added and field shuffling is applied to the data.

These video data and audio data are multiplexed in IC1103.

The IC1103 output data is transferred to the FPGA2 IC1104 where the data is converted to serial data, and synchronizing data are added to the data. The serial data is then sent to the EQ-84 board.

*1 BRR/ECC encoder: Bit Rate Reduction and Error Correction Code encoder
*2 Audio data: Not compressed

MSW Digital Signal Processing for Recording (EPR-1)

The 10-bit parallel video data that is output from VIOLA on the VPR-64 board is transferred to "MIKE"*1 MPEG encoder IC202 on the EPR-1 board where the video data is compressed to MPEG data*2. MIKE rounds off 10-bit data to 8-bit data. The MIKE output data is transferred to "MFC" *3 bitstream converter IC300.

The MIKE output data is also transferred to the SDTI-CP output circuit on the EPR-1 board, as well as to the Ethernet output circuit on the VN-13 board via the TX selector in the FPGA IC900 for bypass EE.

The MPEG data extracted from the input SDTI-CP signal *4 and the MPEG data extracted from the input Ethernet signal *5 are input into the FPGA IC900 on the EPR-1 board. Either of these MPEG data is selected by the RX selector in the FPGA, and the selected data is transferred to MFC.

MFC rearranges the data in the tape recording order *6.

Either the MFC output data or the RX selector output data is selected by the ENC selector in the FPGA, and the selected data is transferred to "EVE" *7 ECC encoder *8 IC301.

Any one of the audio data *9 from the APR-52 board, the audio data extracted from the input SDTI-CP signal, or the audio data extracted from the input Ethernet signal is selected by IC718 and IC712 on the EPR-1 board, and the selected audio data is also transferred to EVE.

EVE applies error correction code processing and system data multiplexing to the video data and audio data, and outputs recording data AC and BD as well as clock to the EQ-84 board.

The error correction code processing proceeds in the order of shuffling, outer error correction code addition, inner error correction code addition, and data scrambling.

Either the MFC output data or the RX selector output data is selected by the CONV selector in the FPGA, and the selected data is sent to the digital playback signal processing block on the DPR-229/155 board for bypass EE.

*1 MIKE: Nickname of MPEG encoder IC202
*2 MPEG data: MPEG2 4:2:2P@ML I picture 50 Mbps
*3 MFC: Nickname of bitstream converter IC300
*4 Extracted from the input SDTI-CP signal...: IC400 on EPR-1 board
*5 Extracted from the input Ethernet signal...: Output from VN-13 board via IF-886 board
*6 rearranges the data...: Rearranges the DCT coefficient
*7 EVE: Nickname of ECC encoder IC301
*8 ECC encoder: Error Correction Code encoder
*9 Audio data: Not compressed

4. RF Processing

Rotary Head Arrangements

HDW-2000/D2000
DVW-2000/P

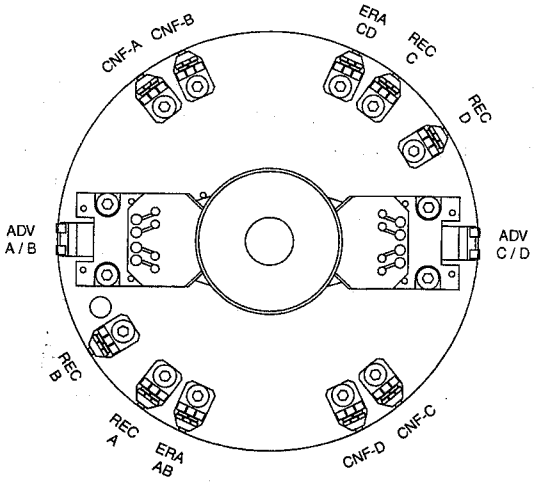

HDW-M2000/P, S2000/P
DVW-M2000/P
MSW-A2000/P, M2000/P, M2000E/P

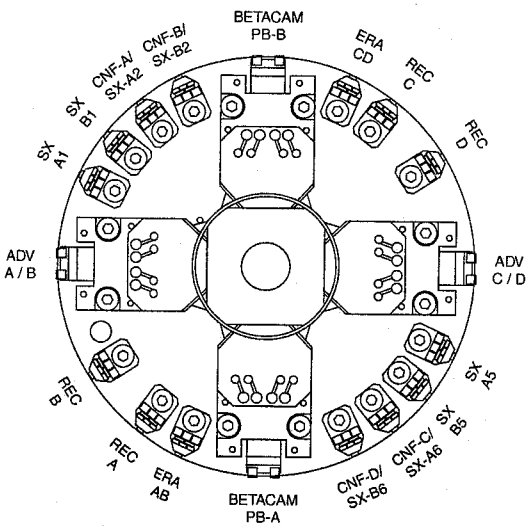

HDW-M2100/P
MSW-M2100/P, M2100E/P

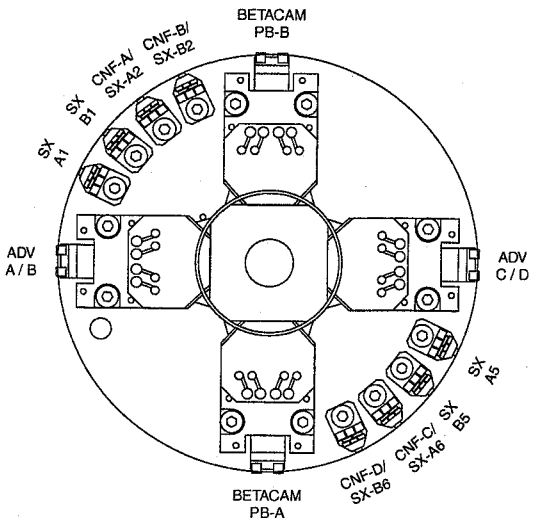

MSW-2000

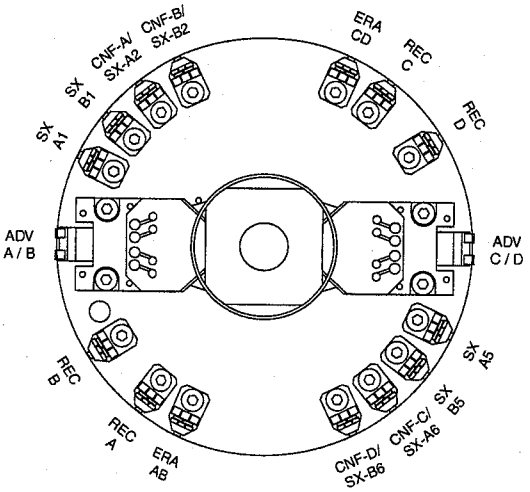

RF Recording Processing (EQ-84)

The recording data AC and BD and the clock from the HPR-1/EPR-1 board* are input into the REC driver IC207 on the EQ-84 board. The REC driver output data is transferred to the recording amplifier through the rotary transformer, and is then recorded on the tape by the four recording heads. The recording amplifier regulates the recording current according to the head's characteristics.

The clock from the REC driver passes through the rotary transformer and is input into the erase amplifier where it is transformed to rotary erase current.

* HPR-1/EPR-1 boards: HPR-1 board for HDW, EPR-1 board for DVW and MSW

RF Playback Processing (EQ-84)

RF signals played back by respective playback heads are amplified by the playback amplifier in the upper drum, and only output signals from the head selected by the head control signal are sent to the EQ-84 board through the rotary transformer.

The heads for ADV A/B and C/D, BETACAM PB-A (Y/C), and for PB-B (Y/C) are DT heads*. The bimorph drive signal drives the DT heads from the DT-47 board through the slip rings. The strain gauge signal that indicates the state of the bimorph is fed back from the DT heads through the slip rings to the DT-47 board.

The output data of the playback amplifier is input into IC600, IC700, IC1600, and IC1700 where equalizing adjustment and A/D conversion are applied to the data. The data is then transferred to IC100 in the digital signal processing block for playback.

The outputs of the equalizers IC600 and IC1600 are sent to the DM-123 and AU-272 boards for analog Betacam playback processing.

Envelope signals are generated from the equalizer output data by IC600 and IC1600, and are then sent to the DT control circuit on the SS-89 board.

* DT head: Dynamic Tracking head

RF Control (EQ-84)

The control signal for head selection, etc. is multiplexed in IC100 on the EQ-84 board, and is then sent to the upper drum through the rotary transformer. The multiplexed signal is demultiplexed to the REC enable signal and head switching signal by the demultiplexer.

5. Analog Betacam Playback Processing

Video Signal Playback (DM-123) ... **HDW-M/S, DVW-M, MSW-A/M**

The analog Betacam playback Y and C RF signals adjusted by the equalizer on the EQ-84 board are sent to the DM-123 board to receive cosine EQ, FM demodulation, 10-bit A/D conversion, and TBC processing sequentially. The TBC processing performs the following.

- Expand the time base of the playback signals whose time base was compressed by the large-diameter drum*1.
- Expand the time base of the R-Y and B-Y signals recorded by CTDM*2.
- Suppress jitter and skew components contained in the playback signals.
- Process search pictures.

DOC*3 and noise reduction are carried out for the Y data that have received TBC processing. In addition to DOC, line crawl processing is performed for the R-Y/B-Y data to absorb the line-by-line gain difference caused by the time-base compression during recording.

The Y data and R-Y/B-Y data are then multiplexed to 10-bit parallel data, and the multiplexed data is sent to VIOLA on the VPR board*4 through the setup rejection circuit.

*1 Large-diameter drum: Drum diameter = 81.4 mm (this unit), 74.5 mm (analog Betacam recorder)
*2 CTDM: Chroma Time Division Multiplex
*3 DOC: Dropout Compensation
*4 VPR board: VPR-64 board for HDW and MSW, VPR-91 board for DVW

AFM* Signal Playback (AU-272) ... HDW-M, DVW-M, MSW-A/M

The analog Betacam playback C RF signal that has been adjusted by the equalizer on the EQ-84 board is sent to the AU-272 board. The AFM signal is extracted from the C RF signal by the LPF. The extracted analog AFM signal is converted to a digital signal, and then receives TBC processing.

- Expand the time base of the playback signal whose time base was compressed by the large-diameter drum.
- Suppress jitter and skew components contained in the playback signal.

The AFM signal that has received TBC processing further receives D/A conversion, FM demodulation, and noise reduction sequentially, and is then sent to the APR-52 board as analog Betacam CH3 and CH4 playback signals.

* AFM: Audio FM (FM modulated audio signal)

LAU* Signal Playback (AE-31, AU-272) ... HDW-M/S, DVW-M, MSW-A/M

The CH1 and CH2 audio signals played back by the stationary heads receive playback equalizing on the AE-31 board and DOLBY C noise reduction on the AU-272 board, and are then sent to the APR-52 board as analog Betacam CH1 and CH2 playback signals.

* LAU: Longitudinal Audio recorded in the longitudinal direction of tape (recorded and played back by a stationary head)

6. Digital Signal Processing for Playback

HDCAM Format Digital Processing for Playback ... HDW

(DPR-155/229, DPR-195, EQ-84, HPR-1)

The RF signal that has received playback equalizing is input into IC1000 on the EQ-84 board for Viterbi decoding and inner error correction. The 2-line data (8 bits each) are sent from IC1000 to the DPR board*1.

The HDCAM playback data sent to the DPR board passes through the FGOUT IC300, and is input into IC206*2 where deshuffling, outer error correction, and vide/audio data separation are performed for the playback data. The video data processed for the outer error correction is sent to the HPR-1 board via the FGOUT IC.

The playback video data is transferred to the SDTI (HDCAM) PB/EE selector IC203, IC207, IC508, and IC509. The output data of the SDTI (HDCAM) PB/EE selector is sent to two systems.

For one system, the output data is sent to the DIF-134 board together with the audio data from the APR-52 board for SDTI (HDCAM) output processing.

For the other system, the output data is sent to the BRR decoder IC600 and IC603 to expand the compressed data to 3:1:1 HDCAM data. Further, the HDCAM data is transferred to IC700 for concealment and freezing processing, and is then transferred to the HD SDI PB/EE selector IC113, IC114, IC707, and IC723. The output data of the selector is up-sampled from 3:1:1 data to 4:2:2 data by the output filter IC802, and is then decoded to 10-bit non-compressed HD video data. The decoded HD video data is sent to the HIF-1 board.

IC802 also generates video test signals for the player and monitoring.

The CH1/2 and 3/4 audio playback data separated by IC206 on the DPR board are transferred to the audio DSP IC701 and IC704 via the FGOUT IC. The audio DSP generates jog sound in accordance with the playback tape speed using the information from the system control CPU. Audio DSP output data is sent to the APR-52 board.

The confidence playback*3 audio data is sent from the DPR board to the APR-52 board bypassing the FGOUT IC and the audio DSP.

*1 DPR board: DPR-229 or DPR-155 board (changed from DPR-155 to DPR-229)
*2 IC206 on the DPR board: IC206 on DPR-229 board
IC100 on DPR-195 board piggybacked on DPR-155 board
*3 Confidence playback: Concurrent recording and playback of the recorder

Digital Betacam Format Digital Processing for Playback ... HDW-D/M, DVW, MSW-M (DPR-155/229, DPR-195/208, EQ-84)

The RF signal that has received playback equalizing is input into IC1000 on the EQ-84 board for Viterbi decoding and inner error correction. The 2-line data (8 bits each) are sent from IC1000 to the DPR board*1.

The digital Betacam playback data sent to the DPR board passes through the FGOUT IC300, and is input into IC206*2 where deshuffling, outer error correction, and video/audio data separation are performed for the playback data.

The video data processed for the outer error correction is transferred to the DB decoder IC500 via the FGOUT IC. The data is decoded to 10-bit non-compressed SD video data in IC500, and is then sent to the VPR board.

The CH1/2 and 3/4 audio playback data separated by IC206 are transferred to the audio DSP IC701 and IC704 via the FGOUT IC. The audio DSP generates jog sound in accordance with the playback tape speed using the information from the system control CPU. Audio DSP output data is sent to the APR-52 board.

The confidence playback*3 audio data is sent from the DPR board to the APR-52 board bypassing the FGOUT IC and the audio DSP.

*1 DPR board: DPR-229 or DPR-155 board (changed from DPR-155 to DPR-229)
*2 IC206 on the DPR boar: IC206 on DPR-229 board (HDW, DVW, MSW-M)
IC100 on DPR-195 board piggybacked on DPR-155 (HDW)
IC100 on DPR-208 board piggybacked on DPR-155 (MSW-M)
*3 Confidence playback: Concurrent recording and playback of the recorder

MPEG IMX Format Digital Processing for Playback ... HDW-D/M, DVW-M, MSW (DPR-155/229, DPR-194/195/208, EPR-1, EQ-84)

The RF signal that has received playback equalizing is input into IC1000 on the EQ-84 board for Viterbi decoding and inner error correction. The 2-line data (8 bits each) are sent from IC1000 to the DPR board*1.

The MPEG IMX playback data sent to the DPR board passes through the FGOUT IC300, and is input into IC206*2 where deshuffling, outer error correction, and video/audio data separation are performed for the playback data.

The separated video data is transferred to "MFC"*3 bitstream converter IC407 via the FGOUT IC. MFC returns the DCT coefficients rearranged during recording to those in the MPEG format. The MPEG video data is decoded to 10-bit non-compressed SD video data by the MPEG decoder IC650*4, and is then sent to the VPR board.

IC206 has a function to process the MPEG IMX playback data at 2x-speed (54 Mbps). The data to which 2x-speed processing has been applied is sent to the EPR-1 board via the FGOUT IC and MFC for the MSW series SDTI-CP output. The FPGA IC900 on the EPR-1 board converts this data from 54 Mbps interface to 27 Mbps, and then performs the SDTI-CP output processing. The FPGA IC900 output signal is also sent to the VN-13 board via the IF-886 board for the MSW series Ethernet output.

The CH1/2 to CH7/8 audio playback data separated by IC206 on the DPR board are transferred to the audio DSP IC701, IC704, IC707, and IC710 via the FGOUT IC. The audio DSP generates jog sound in accordance with the playback tape speed using the information from the system control CPU. Audio DSP output data is sent to the APR-52 board.

The confidence playback*5 audio data is sent from the DPR board to the APR-52 board bypassing the FGOUT IC and the audio DSP.

*1 DPR board: DPR-229 or DPR-155 board (changed from DPR-155 to DPR-229)
*2 IC206 on the DPR boar: IC206 on DPR-229 board (HDW-D/M, DVW-M, MSW-A/M)
IC100 on DPR-195 board piggybacked on DPR-155 (HDW-M)
IC100 on DPR-208 board piggybacked on DPR-155 (MSW-A/M)
IC100 on DPR-194 board piggybacked on DPR-155 (MSW-2000)
*3 MFC: Nickname of bitstream converter IC407
*4 MPEG decoder IC650: IC600 in case of DPR-155 board
*5 Confidence playback: Concurrent recording and playback of the recorder

Betacam SX Format Digital Processing for Playback ... HDW-M/S, DVW-M, MSW (DPR-155/229, EPR-1, EQ-84)

The RF signal that has received playback equalizing is input into IC1000 on the EQ-84 board for Viterbi decoding and inner error correction. The 2-line data (8 bits each) are sent from IC1000 to the DPR board*. The Betacam SX playback data sent to the DPR board passes through the FGOUT IC300, and is input into IC301 where deshuffling, outer error correction, and video/audio data separation are performed for the playback data. The separated video data passes through the FGOUT IC, and is input into the SX decoder IC902 where the data is decoded to 10-bit non-compressed SD video data, and is then sent to the VPR board.

The CH1/2 and CH3/4 audio playback data separated by IC301 are transferred to the audio DSP IC701 and IC704 via the FGOUT IC. The audio DSP generates jog sound in accordance with the playback tape speed using the information from the system control CPU. Audio DSP output data is sent to the APR-52 board.

* DPR board: DPR-229 or DPR-155 board (changed from DPR-155 to DPR-229)

7. Video Signal Output Processing

Video Output Signals

The following table shows video output signals of each model.

	HDW Series	DVW Series	MSW Series
SDTI (HDCAM)	HDCAM *1	—	—
SDTI-CP	—	—	MPEG2 4:2:2P@ML
HD-SDI	HD 4:2:2	HD 4:2:2 *2	HD 4:2:2 *2
SDI (SD)	SD 4:2:2	SD 4:2:2	SD 4:2:2
Ethernet	—	—	MPEG2 4:2:2P@ML *3
ANALOG COMPONENT	SD Y/R-Y/B-Y	SD Y/R-Y/B-Y	SD Y/R-Y/B-Y
ANALOG COMPOSITE	NTSC or PAL	NTSC or PAL	NTSC or PAL

*1 SDTI (HDCAM) Output of HDW: SDTI Interface Board HKDW-102
*2 HD-SDI Output of DVW/MSW: HD Upconverter Board BKMW-104 *4
*3 Ethernet Output of MSW: Network Interface Board BKMW-E2000, BKMW-E3000 *4
*4 BKMW-104, BKMW-E2000, BKMW-E3000: incompatible with each other for MSW

SDTI (HDCAM) Output (DIF-134, HPR-1) ... HDW

The compressed HDCAM video data from the SDTI (HDCAM) PB/EE selector IC203, IC207, IC508, and IC509 on the HPR-1 board is sent to the DIF-134 board together with the audio data sent from the APR-52 board.

The video/audio data are converted to SDTI-format parallel data, and the parallel data is converted to serial data. The serial data is output from the connectors SDTI (HDCAM) OUT 1 and SDTI (HDCAM) OUT 2.

HD-SDI Output (HIF-1, SDI-63, VPR-64)

The HD-SDI video output signal processing varies with the format of playback data as shown below.

- HDCAM format playback **... HDW**
  The non-compressed 10-bit HD Y data and 10-bit HD C data decoded on the HPR-1 board are sent to the HIF-1 board for output processing.
- Digital Betacam, MPEG IMX or Betacam SX format playback **... HDW-D/M/S, DVW, MSW**
  The non-compressed 10-bit SD video data decoded on the DPR board is sent to "VIOLA" *1 on the VPR board. The non-compressed 10-bit SD Y data and 10-bit SD C data are sent from VIOLA to the HIF-1 board. These SD video data are up-converted *2 to HD Y data and HD C data by the VSP *3 IC300 on the HIF-1 board.
- Analog Betacam format playback **... HDW-M/S, DVW-M, MSW-A/M**
  The 10-bit SD video data is sent from the TBC block on the DM-123 board to VIOLA on the VPR board. The data is then up-converted to HD Y data and HD C data in the same route as Digital Betacam format playback.

The VSP on the HIF-1 board applies slow-process control and line conversion to the 10-bit HD Y data and 10-bit HD C data. VSP output data is transferred to the HD VP *4.

The HD VP adjusts video signal gain, sync phase, etc. and then outputs the HD video data to the VFS2 *5 IC503 *6. The VFS2 delays (SYNC PHASE) the main-line video data.

The VSP output data during HDCAM format playback is also transferred to the down-converter IC600 for SD video output via the VP.

The VFS2 output data is sent to the two TX-96 boards *7 where the data is converted to HD SDI parallel data together with the audio data sent from the APR-52 board, and the parallel data is converted to serial data. The serial data is output from the connectors HD-SDI OUT 1, HD-SDI OUT 2, and HD-SDI OUT 3. For the data to be transferred to HD-SDI OUT 3, character data is superimposed on the TX-96 board.

*1 VIOLA: Nickname of video processor IC701 on VPR board
*2 HD up-conversion: 525/59.94i → 1080/59.94i
525/59.94i → 720/59.94P (for HIF-1 board with suffix -22 or higher)
625/50i → 1080/50i
*3 VSP: Video Signal Processor
*4 HD VP: IC401 (for HIF-1 board with suffix -21), IC400 (for HIF-1 board with suffix 22 or 23), or incorporated in FPGA1 IC200 (for HIF-1 board with suffix 24 or higher)
*5 VFS: Video Frame Synchronizer
*6 VFS2 IC503: IC500 (for HIF-1 board with suffix 21)
*7 Two TX-96 boards: One SDI-63 board (for HIF-1 board with suffix 21)

SDTI-CP and Ethernet Output (DPR-155/229, EPR-1, IF-886, VN-13) ... **MSW**

The video signal processing route for SDTI-CP and Ethernet outputs varies with the playback format as shown below.

- MPEG IMX format playback
  The MPEG IMX video data is converted to MPEG video data by the bitstream converter IC407 on the DPR board. The MPEG video data is sent to the EPR-1 board for output processing.
- Digital Betacam, Betacam SX or analog Betacam format playback

The playback video data is sent from VIOLA on the VPR-64 board to the EPR-1 board. The data is converted to MPEG video data by "MIKE"* MPEG encoder IC202, and is then transferred to the output processing circuit through the TX selector in the FPGA IC900.

MIKE converts the input SD video signals to MPEG data during the recording process.

The SDTI-CP output processing is as follows.

The MPEG video data is converted by IC400 on the EPR-1 board to SDTI-format parallel data together with the audio data from the APR-52 board, and the parallel data is converted to serial data by IC600. The serial data is output from the connectors SDTI-CP OUT 1 and SDTI-CP OUT 2.

The Ethernet output processing is as follows.

The MPEG video data and the audio data from the APR-52 board are sent from the EPR-1 board through the IF-886 board to the VN-13 board for network interface processing. Refer to "9. Network Input/Output Processing" described later.

* MIKE: Nickname of MPEG encoder IC202 on EPR-1 board

SDI (SD) Output (HIF-1, SDI-52, VPR-64/91)

The SDI (SD) output signal processing route varies with the playback format as shown below.

- HDCAM format playback ... **HDW**
  The HD video data is down-converted to SD video data by IC600 on the HIF-1 board. The converted 10-bit SD Y data and 10-bit SD C data are sent to VIOLA on the VPR board.
- Digital Betacam, MPEG IMX or Betacam SX format playback ... **HDW-D/M/S, DVW, MSW**
  The non-compressed 10-bit SD video data decoded on the DPR board is sent to VIOLA on the VPR board.
- Analog Betacam format playback ... **HDW-M/S, DVW-M, MSW-A/M**
  The 10-bit SD video data is sent from the TBC block on the DM-123 board to VIOLA on the VPR board.

VIOLA performs the following for the input SD video data.

- Field Jog/VAR processing using the memory (for MPEG IMX or Betacam SX format playback)
- Freeze picture memory
- H/V blanking
- Y ADD and ESR
- Playback VITC signal reading

The 10-bit SD video data from VIOLA is sent to the SDI-52 board together with the CH1/2 to CH7/8 audio data sent from the APR-52 board. On the SDI-52 board, the video/audio data is converted to 10-bit parallel SDI data, and the parallel data is converted to serial data. The serial SD SDI data is output from the connectors SDI OUT 1, SDI OUT 2, and SDI OUT 3. For the data to be transferred to SDI OUT 3, character data is superimposed.

Analog Component and Composite Video Outputs (VPR-64/91)

The 10-bit component video data is transferred from VIOLA to "NICE" *1 digital encoder IC902. NICE converts the component video data to D1 data *2 and D2 data *3.

The D1 data is converted to analog Y/R-Y/B-Y signals by IC920, and these signals are output from the connector ANALOG COMPONENT Y/R-Y/B-Y OUT.

The D2 data is converted to analog composite signal in NICE, and the analog composite signal is output from the connectors ANALOG COMPOSITE VIDEO OUT 1, ANALOG COMPOSITE VIDEO OUT 2, and ANALOG COMPOSITE VIDEO OUT 3. For the data to be transferred to ANALOG COMPOSITE VIDEO OUT 3, character data is superimposed.

*1 NICE: Nickname of digital encoder IC902 on VPR board
*2 D1 data: 4:2:2 component digital data
*3 D2 data: 4fsc composite digital data

8. Audio Signal Output Processing

Audio Output Signals

The following table shows audio output signals of each model.

	HDW Series	DVW Series	MSW-	
			2000, A2000/P	M2000/P, M2000E/P, M2100/P, M2100E/P
SDTI (HDCAM)	CH1/2, CH3/4 *1	—	—	—
SDTI-CP	—	—	CH1/2 to CH7/8	CH1/2 to CH7/8
HD-SDI	CH1/2 to CH7/8	CH1/2 to CH7/8 *2	CH1/2 to CH7/8 *2	CH1/2 to CH7/8 *2
SDI (SD)	CH1/2 to CH7/8	CH1/2 to CH7/8	CH1/2 to CH7/8	CH1/2 to CH7/8
Ethernet	—	—	CH1/2 to CH7/8 *3	CH1/2 to CH7/8 *3
AES/EBU	CH1/2 to CH7/8	CH1/2 to CH7/8	CH1/2 to CH7/8	CH1/2 to CH7/8
ANALOG AUDIO	CH1 to CH4	CH1 to CH4	CH1 to CH4	CH1 to CH4
CUE	Cue	Cue	—	Cue

*1 SDTI (HDCAM) Output of HDW: SDTI Interface Board HKDW-102
*2 HD-SDI Output of DVW/MSW: HD Upconverter Board BKMW-104 *4
*3 Ethernet Output of MSW: Network Interface Board BKMW-E2000, BKMW-E3000 *4
*4 BKMW-104/BKMW-E2000, BKMW-E3000: incompatible with each other for MSW

Audio Playback Signals (AE-31, APR-52, CUE-13, DPR-155/229)

- The audio data played back in the HDCAM, digital Betacam, MPEG IMX or Betacam SX format is separated on the DPR board, and is then sent to the APPI *1 IC1425 on the APR-52 board.
- The data played back by the confidence head during recording is also separated on the DPR board, and is then sent to the APPI on the APR-52 board.
- The audio signals *2 played back in the analog Betacam format are converted to digital data by IC108 and IC308 on the APR-52 board, and are then sent to the APPI.
- The cue playback signal is equalized on the AE-31 board, and is then output from the connector CUE OUT via the output amplifier on the CUE-13 board. The signal is also sent to the APR-52 board for output monitoring.

*1 APPI: Nickname of Audio processor IC1425
*2 Analog Betacam audio signals: CH1, 2 = LAU, CH3, 4 = AFM

Audio Playback Signal Processing by APPI (APR-52)

The APPI on the APR-52 board performs the following for audio playback signals except for the cue signal.

- Playback/EE switching
- Output level adjustment
- Delay adjustment
- Muting
- Analog audio output channel selection
- Monitor/headphone output channel selection

SDTI (HDCAM), HD-SDI, SDI (SD), and Ethernet Outputs (APR-52)

The CH1/2 to CH7/8 audio data for SDI are sent from the APPI to the following destinations, and are then output together with video data. The data sampling rate is converted on the RC-89 board *1 for the HDCAM format playback.

- SDTI (HDCAM): To SDTI encoder on DIF-134 board via HPR-1 board
- HD-SDI: To HD SDI encoders on two TX-96 boards *2 via HIF-1 board
- SDTI-CP: To SDTI encoder on EPR-1 board
- SDI (SD): To SDI encoder on SDI-52 board via VPR board
- Ethernet: To VN-13 board via EPR-1 board and IF-886 board

*1 RC-89 board: Piggyback board of APR-52 (for HDW)
*2 Two TX-96 boards: One SDI-63 board for HIF-1 board with suffix 21

AES/EBU Output (APR-52)

The CH1/2 to CH7/8 audio data from the APPI are converted to AES/EBU data by IC1117 and IC1118. The AES/EBU data is output from the connectors AES/EBU OUT CH1/2 to AES/EBU OUT CH7/8.

Analog Audio Output (APR-52)

The audio data from the APPI is oversampled by the digital audio filter, and is then converted to analog signals. The analog signals are deemphasized, and are then output from the connectors ANALOG AUDIO OUT CH1 to ANALOG AUDIO OUT CH4.

Monitor/Headphone Outputs (APR-52, HP-101)

The data for monitoring from the APPI is oversampled by the digital audio filter, and is then converted to analog signals. The analog signals are deemphasized, is mixed with the cue playback signal, and are then output from the connectors MONITOR OUT L and MONITOR OUT R.
The mixed signal is also sent to the output amplifier on the HP-101 board, and is output from the PHONES jack.

Cue Output (AE-31, CUE-13)

The cue playback signal equalized and amplified on the AE-31 and CUE-13 boards is output from the connector CUE OUT as described above. The signal is also sent to the APR-52 board for output for monitoring.

9. Network Input/Output Processing

Network Input/Output Processing ... MSW (BKMW-E2000)

(IF-885, IF-886, VN-13)

Network input/output processing is performed on the VN-13, IF-885, and IF-886 boards (mainly by the VN-13 board). The IF-885 board is for mounting the Ethernet connector. The IF-886 board functions as a video/audio data buffer.

Note

ICs in the parentheses below show reference numbers for the VN-13 board with suffix 11.

Video/Audio Signal Processing

The video/audio signal processing block performs packing/unpacking the MXF* file format and synchronizing/desynchronizing for transmit/receive data.

* MXF: Material Exchange Format

• Transmission

When transmitting data, the playback MPEG video data and the playback audio data are sent from the EPR-1 board through the IF-886 board to the VN-13 board. The video/audio data is sent through the video/audio processor IC412 (IC412 and IC501) to IC601 (IC603). IC601 (IC603) writes the video/audio data in the buffer memory IC608 to 611 (IC1007 and IC1008), and then packs the data in accordance with the MXF file format.

• Reception

When receiving data, the MXF file is unpacked and data is read out. The data read timing is controlled by the CPU. The read data is, in the reverse process of transmission, sent from IC601 (IC603) through the video/audio processor to the digital signal processing block for recording on the EPR-1 board.

• File Monitor

When monitoring files (e-monitoring), the baseband video data from the VPR board and the audio data from the APR-52 board are input into the video/audio processor IC412. The baseband video data is processed for raster conversion by the video/audio processor and the SRAM IC413, is further converted to JPEG data by IC415, and is then input into IC601 (IC603). IC603 (IC416) converts the sampling rate of the audio data from 48 kHz to 8 kHz. IC601 (IC603) packs the processed video/audio data for file monitoring.

TCP/IP Processing

The TCP/IP processing block performs TCP/IP packet processing for transmit/receive data.
When transmitting data, the buffer memory data is assembled into packets by the CPU control and the IC601 (IC603) internal processing. Packet data passes through the MAC in IC601 (IC603), receives Physical Layer processing in IC701 (IC1101), and is then output from the Ethernet connector.
When receiving data, receive data is, in the reverse process of transmission, extracted from TCP/IP packets, and is then written in the buffer memory.

CPU

The CPU IC1 controls communication with the system control CPU and video/audio data processing, as well as controls the TCP/IP processing.
The CPU is connected to IC601 (IC603) through the PCI bridge IC2 with the dedicated data bus.

Network Input/Output Processing ... MSW (BKMW-E3000)
(IF-885, IF-886, VN-13, DSP-109)

Network input/output processing is performed on the VN-13, DSP-109, IF-885, and IF-886 boards (mainly by the VN-13 board). The DSP-109 board is used for Proxy. The IF-885 board is for mounting the Ethernet connector. The IF-886 board functions as a video/audio data buffer.

Video/Audio Signal Processing

The video/audio signal processing block performs packing/unpacking the MXF* file format and synchronizing/desynchronizing for transmit/receive data.

* MXF: Material Exchange Format

• Transmission

When transmitting data, the playback MPEG video data and the playback audio data are sent from the EPR-1 board through the IF-886 board to the VN-13 board. The video/audio data is sent through the video/audio processor IC412 to IC601. IC601 writes the video/audio data in the buffer memory IC608 to 611, and then packs the data in accordance with the MXF file format.

• Reception

When receiving data, the MXF file is unpacked and data is read out. The data read timing is controlled by the CPU. The read data is, in the reverse process of transmission, sent from IC601 through the video/audio processor to the digital signal processing block for recording on the EPR-1 board.

• File Monitor

When monitoring files (e-monitoring), the baseband video data from the VPR board and the audio data from the APR-52 board are input into the video/audio processor IC412. The baseband video data is processed for raster conversion by the video/audio processor and the SRAM IC413, is further converted to JPEG data by IC415, and is then input into IC601. IC603 converts the sampling rate of the audio data from 48 kHz to 8 kHz. IC601 acks the processed video/audio data for file monitoring.

Proxy transmission

The baseband video data from the VPR-64 board and the audio data from the APR-52 board pass through the VN-13 board, and are then input into IC1 on the DSP-109 board where filtering is added to the baseband video data. It is then transferred to IC2 for MPEG encoding, and is returned to IC1. The sampling rate of the audio data is converted from 48 kHz to 8 kHz in IC201 to IC204. Thus these processed video/audio data are clipped by IC1, and are then packed in IC601 on the VN-13 board.

TCP/IP Processing

The TCP/IP processing block performs TCP/IP packet processing for transmit/receive data.
When transmitting data, the buffer memory data is assembled into packets by the CPU control and the IC601 internal processing. Packet data passes through the MAC in IC601, receives Physical Layer processing in IC701, and is then output from the Ethernet connector.
When receiving data, receive data is, in the reverse process of transmission, extracted from TCP/IP packets, and is then written in the buffer memory.

CPU

The CPU IC1 controls communication with the system control CPU and video/audio data processing, as well as controls the TCP/IP processing.
The CPU is connected to IC601 through the PCI bridge IC2 with the dedicated data bus.

10. Synchronization

HDW Series (HIF-1, VPR-64)

When recording, the F, V, and H signals, and the 74 MHz clock extracted from the input HD-SDI or SDTI (HDCAM) video data selected for recording are input into the TG* IC702 on the HIF-1 board where F, V, and H signals and several clocks synchronized with the input video are generated.
When playing back, the signal separated from the HD SYNC signal on the connector REF IN is input into the TG on the HIF-1 board where F, V, and H signals and several clocks synchronized with the signal are generated. When no signal is input into REF IN, the 74 MHz clock generated by the TG on the HIF-1 board is used as reference signal.
The TG also sends a sync signal to the TG IC1226 on the VPR board for SD video signal processing.
The TG on the VPR board generates the clocks described in "DVW/MSW Series" below.

* TG: Timing Generator

The reference signal SV REF for servo is generated from the timing signal generated from the input video signal, or from the internal reference signal timing. The SV REF signal is generated or selected by VIOLA and the FPGA0 on the VPR-64 board according to the VTR operating status. The internal reference signal is generated by the 27 MHz crystal oscillator on the VPR-64 board. The SV REF signal is sent to the servo CPU on the SS-89 board.

DVW/MSW Series (HIF-1, VPR-64/91)

Several reference clocks are generated by the circuit block on the VPR board including the TG IC1226 as a core device.
When recording, the following three clocks are generated based on the video signal selected for recording.
When playing back, the analog composite signal on the connector REF VIDEO IN is used as a reference signal.
When no signal is input into REF VIDEO IN, the 27 MHz clock from the crystal oscillator on the VPR board is used as reference clock.

1. 4fsc clock for composite signal (for NTSC and PAL independently)
2. 27 MHz reference clock for video signal processing
3. 24.58 MHz reference clock for audio signal processing

When the HD Upconverter board BKMW-104 is installed, the signal separated from the HD SYNC signal that is input into REF VIDEO IN is sent to the TG on the HIF-1 board where the signal is processed in the same way as the HDW series.
The reference signal for servo is generated in the same way as the HDW series.

11. System Control

System Control CPU (SS-89)

Dedicated one-chip CPU IC1106 is used to comply with various recording/playback formats. It communicates with the circuit blocks of the unit to control them using the following 8-bit parallel interface and serial interfaces.
The CPU is equipped with an LTC time code processing function.

(1) 8-bit parallel interface (SS BUS)
Used for communication with the video/audio signal processing boards, Memory Stick/IC card interface circuits (FP-133 board), and the servo CPU (SS-89 board).

(2) Serial interfaces
Used for communication with the following 10 systems.

- SS SYPS 0
  Sends character data to be superimposed on video out signals to the VPR and HIF-1 boards.
- SS SYPS 2 and 3
  Sends mode data and adjustment data to the video/audio signal processing boards.
- SS SYPS 1
  Communicates with the CP CPU on the CP-371 board to send/receive 50-pin PARALLEL REMOTE data and 15-pin VIDEO CONTROL data.
- SS TF
  Communicates with the Tele-File CODEC on the DIO-65 board.
- SS KEY RX/TX
  Receives operation data from the control panel and sends status data.
- SS 9PIN 1 RX/TX
  Sends/receives data to/from the connector REMOTE 1 IN.
- SS 9PIN 2 RX/TX
  Sends/receives data to/from the connector REMOTE 1 OUT.
- SS COM RX/TX
  Sends/receives data to/from the RS-232C connector.
- SS VA RX/TX
  Sends/receives data to/from the 9-pin connector VIDEO CONTROL for HDW series.

Peripheral Circuits (Control Panel, CP-371, DIO-65, FP-133, FP-134, and SE-606/A)

(1) CP-371 board

Communicates with the system control CPU on the SS-89 board via the CPU IC706 to send/receive 50-pin PARALLEL REMOTE data and 15-pin VIDEO CONTROL data.

(2) DIO-65 board, SE-606/A board

- DIO-65 board: Tele-File CODEC
- SE-606/A board: Loop antenna for Tele-File

(3) FP-133 board, FP-134 board

FP-133 board:

- Memory Stick interface, IC card interface
- EEPROM IC114, IC115

  Saves the setup menu and 50-pin PARALLEL REMOTE setting data.
- NVRAM IC111

  Saves the panel settings, VTR error log, and calendar clock.
- I/O interface with REMOTE EJECT switch/LED and FORMAT INDICATOR LED

FP-134 board:

- IC card input/output buffer

Note

HDW-D2000/S2000/P accepts no IC card. No FP-134 board is mounted either.

(4) Control panel

Handles the following functions.

- Key/lamp control
- Search dial
- Multifunction control
- Function page up/down key control
- Displaying audio input selection, input mixing status, monitoring status, non-audio data, etc.
- Audio level control (8 channels each for REC and PB)
- Switching meter scale (Peak 0, Ref = 0, Fine)
- Displaying time code, etc.

12. **Servo** (DR-414/508, DT-47, PTC-102, SS-89)

The servo CPU IC103 on the SS-89 board provides the main servo control circuit. The sub DR CPU IC100 is provided on the DR board*. The servo CPU communicates with the system control CPU through the 8-bit parallel interface, and also with the DR CPU through the serial interface.

* DR board: Changed to DR-508 board from DR-414 board (all functions unchanged)

The servo reference signal SV REF is generated on the VPR board, and is input into the servo CPU. The CTL signal for recording is generated by the servo CPU, and is recorded by the CTL recording amplifier on the DR board. The CTL signal for playback is amplified on the DR board, and is then input into the servo CPU.
The servo CPU controls the motor driver on the DR board to drive the drum motor, capstan motor, S reel motor, T reel motor, and the threading motor. The FG signal (and PG signal from drum motor only) is fed back to the servo CPU from each motor.
The FG and PG amplifiers of the drum motor are mounted on the DR board. The FG amplifiers of the capstan, S reel, and T reel motors are mounted on the SS-89 board. The FG amplifier of the threading motor is mounted on the PTC-102 board.

Other motors and solenoids are controlled by the DR CPU. Sensor signals such as cassette size and cassette down are input into the DR CPU.

The DT head control circuit is also provided on the SS-89 board. The bimorph drive signal of the DT head generated on the SS-89 board is sent to the driver on the DT-47 board to drive the bimorph. The strain gauge signal of the DT head is amplified on the DT-47 board, and is then fed back to the DT control circuit. The envelope signal of the DT head playback RF signal is also fed back to the DT control circuit from the EQ-84 board. Controls in accordance with tape speed or tape run direction are provided by the servo CPU.

Block Diagram Index

		Page
1.	1P50A973 (VR-300)	*
A.	AC013AA (KY-465)	*
	AC014AA (VR-262)	*
	AC027A (KY-570)	*
	AE-31	3-40
	APR-52	3-42
	APR-52A	3-44
	AU-272	3-46
C.	CCM-15	DR-414/508
	CL-29	DR-414/508
	CP-350	VPR-64/91
	CP-351	APR-52/52A
	CP-371	Function Control
	CUE-13	3-49
D.	DIF-134	3-50
	DIO-65	Function Control
	DM-123	3-52
	DPR-155	3-60
	DPR-194	DPR-155
	DPR-195	DPR-155
	DPR-208	DPR-155
	DPR-229	3-64
	DR-414	3-68
	DR-508	3-70
	Drum Assembly	Overall
	DSP-109	3-73
	DT-47	SS-89
	DU-107	TC-104
E.	EPR-1	3-74
	EQ-84	3-78
F.	FP-133	Function Control
	FP-134	Function Control
	Function Control	3-38
	F248B054 (FED Driver)	*
H.	HIF-1	3-80
	HN-268	DR-414/508
	HP-101	Function Control
	HPR-1	3-84
I.	IF-885	VN-13
	IF-886	VN-13
K.	KY-464 (MBJ834)	*
	KY-465 (AC013AA)	*
	KY-569 (MBJ907B)	*
	KY-570 (AC027A)	*
L.	LED-357	Function Control
	LP-81	DR-414/508
M.	MB-884	*
	MBJ834 (KY-464)	*
	MBJ907B (KY-569)	*
O.	Overall (for DVW)	3-30
	Overall (for HDW)	3-26
	Overall (for MSW)	3-34
P.	PC-70	DR-414/508
	PTC-99	Overall
	PTC-101	*
	PTC-102	DR-414/508
R.	RC-89	APR-52/52A
	RX-80	HIF-1
S.	SDI-52	3-88
	SDI-63	3-89
	SE-606/606A	Function Control
	SS-89	3-90
	SW-1106	Function Control
	SWC-40	Function Control
T.	TC-104	3-93
	TR-119	DR-414/508
	TR-120	DR-414/508
	TX-96	HIF-1
V.	VN-13	3-94
	VPR-64	3-98
	VPR-91	3-104
	VR-262 (AC014AA)	*
	VR-300 (1P50A973)	*

*：この基板は，本章に掲載していません。

*: The block diagram of this board is not described in this manual.

System configuration	Board name	Circuit function
Digital process	DPR-155 DPR-229	Decoder (digital PB) processor (ECC outer decoder, Bit reduction decoder, Audio jog DSP)
	DPR-194 DPR-195 DPR-208	ECC outer decoder
	EPR-1	Digital BETACAM/MPEG IMX encoder (digital REC) processor (Bit reduction encoder, ECC outer encoder, MPEG SDTI-CP input, MPEG SDTI-CP output)
	DIF-134	HDCAM SDTI interface
	HIF-1	HD video signal processor (Video slow process, Video process down converter, Video process up converter)
	HPR-1	HD video signal processor (Input filter, Bit rate reduction encorder, ECC encoder, Bit rate reduction decoder, Concealment, Output filter)
	IF-886	Video stream, Audio signal interface
	RX-80	HD SDI input
	SDI-52	SD SDI interface
	SDI-63	HD SDI interface
	TX-96	HD SDI output
	VN-13	Network interface
Video process	VPR-64 VPR-91	Video signal processor (Composite decoder/encoder, Component A-D/D-A, SDI interface, Reference clock generator)
	DM-123	Analog BETACAM video PB (RF demodulator, TBC)
	DSP-109	Proxy audio/video signal processor
Audio process	APR-52	Audio signal processor, AES/EBU interface, Audio signal A-D/D-A
	AE-31 AE-31H	Analog BETACAM audio (LAU) PB EQ
	AU-272	Analog BETACAM audio (LAU and AFM) PB circuit
	CUE-13	Cue REC/PB
	RC-89H	Audio rate converter
RF process	EQ-84	RF equalizer, ECC inner decoder
System/servo control	SS-89	System control, Servo control
	DR-414 DR-508	Solenoid drivers (Pinch, Brakes, Cleaning), Motor drivers (Drum, Capstan, Reels, Threading, Reel shift, Cassette up/down), REC inhibit sensors, Reel position sensors
	DT-47	DT driver
	TC-104	TC REC/PB circuit, TC/full erase oscillator
Mechanical deck driver/sensor	CCM-15	Threading motor
	DU-107	Demagnetization head
	HN-268	Pinch and Cleaning sloenoids connection, Tape end sensor connection
	PTC-99	Cassette's holes sensor
	PTC-102	Threading FG
	SE-606/606A	Loop antenna board
	TR-119	S tension sensor
	TR-120	T tension sensor, Threading-end and Unthreading-end sensors
Cassette compartment	LP-81	Lamp of cassette compartment
	PC-70	Cassette-in sensors, Cassette size sensor
	CL-29	Cassette up/down motor, Cassette down sensors

Index

System configuration	Board name	Circuit function
Front panel	DIO-65	Connection board, Memory label reader/writer
	FP-133	Memory stick slot and interface, NV-RAMs, Switch panel function (Switches, Control panel connection)
	FP-134	Memory card slot
	FED Driver (F248B054)	FED Driver
	HP-101	Upper control panel function (PHONES)
	KY-464 (MBJ834) KY-569 (MBJ907B)	Lower control panel function (Audio signal selection switches, Menu control switches)
	KY-465 (AC013AA) KY-570 (AC027A)	Lower control panel function (Filed emission display, Audio setting display, Tape transport switches, Editing control switches, CONTROL PANEL connector)
	LED-357	Upper control panel function (Format indicators)
	PTC-101	Search dial
	SWC-40 SW-1106	Upper control panel function (REMOTE, EJECT)
	VR-262 (AC014AA) VR-300 (1P50A973)	Lower control panel function (Audio PB level VRs)
	VR-262 (AC014AA) VR-300 (1P50A973)	Lower control panel function (Audio REC level VRs)
Connector panel	CP-350	Connector board (Analog video)
	CP-351	Connector board (Analog audio, Monitor, Time code)
	CP-371	Connector board (Digital audio (AES/EBU), remote control connectors)
	IF-885	Connector board (Ethernet)
Other	MB-884	Motherboard

Overall (1/2) HDW Series, HKDW-102

VIDEO I/O

		HDW-2000, D2000, M2000/P, S2000/P	HDW-M2100/P, A2100
INPUT	SDTI	HDCAM	—
	HD SDI	HD 4:2:2	—
	REF	HD SYNC	HD SYNC
OUTPUT	SDTI	HDCAM	HDCAM
	HD SDI	HD 4:2:2	HD 4:2:2
	SDI (SD)	SD 4:2:2	SD 4:2:2
	ANALOG COMPONENT	SD Y/R-Y/B-Y	SD Y/R-Y/B-Y
	ANALOG COMPOSITE	NTSC OR PAL	NTSC OR PAL

AUDIO I/O

		HDW-2000, D2000, M2000/P, S2000/P	HDW-M2100/P, A2100
INPUT	SDTI	CH1/2 TO 7/8	—
	HD SDI	CH1/2 TO 7/8	—
	AES/EBU	CH1/2, 3/4	—
	ANALOG	CH1 TO 4	—
	CUE	CUE	—
OUTPUT	SDTI	CH1/2 TO 7/8	CH1/2 TO 7/8
	HD SDI	CH1/2 TO 7/8	CH1/2 TO 7/8
	SDI (SD)	CH1/2 TO 7/8	CH1/2 TO 7/8
	AES/EBU	CH1/2 TO 7/8	CH1/2 TO 7/8
	ANALOG	CH1 TO 4	CH1 TO 4
	CUE	CUE	CUE

3-26

Overall (1/2) HDW Series, HKDW-102

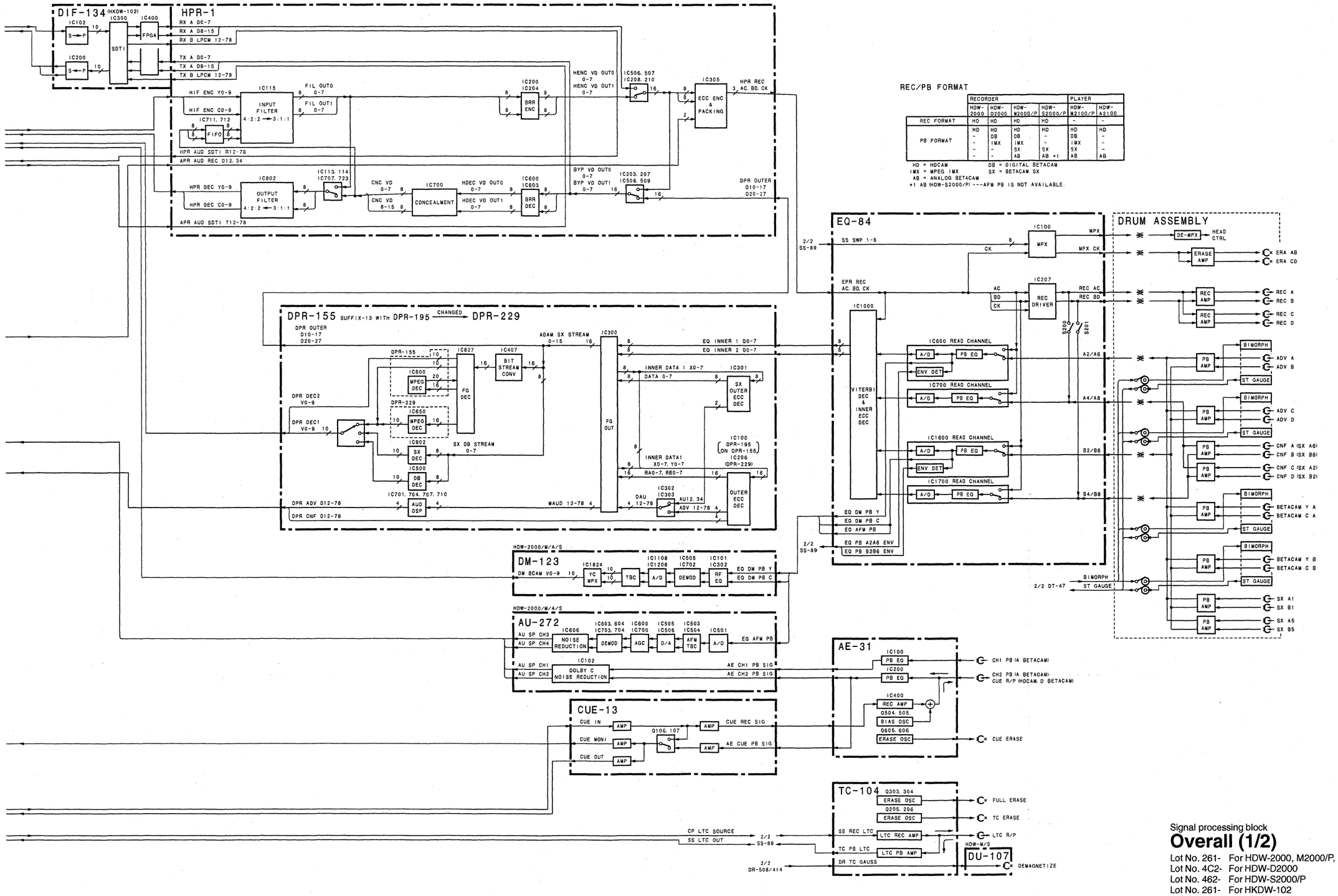

Signal processing block

Overall (1/2)

Lot No. 261- For HDW-2000, M2000/P, M2100/P, A2100
Lot No. 4C2- For HDW-D2000
Lot No. 462- For HDW-S2000/P
Lot No. 261- For HKDW-102

3-27

Overall (2/2) HDW Series, HKDW-102

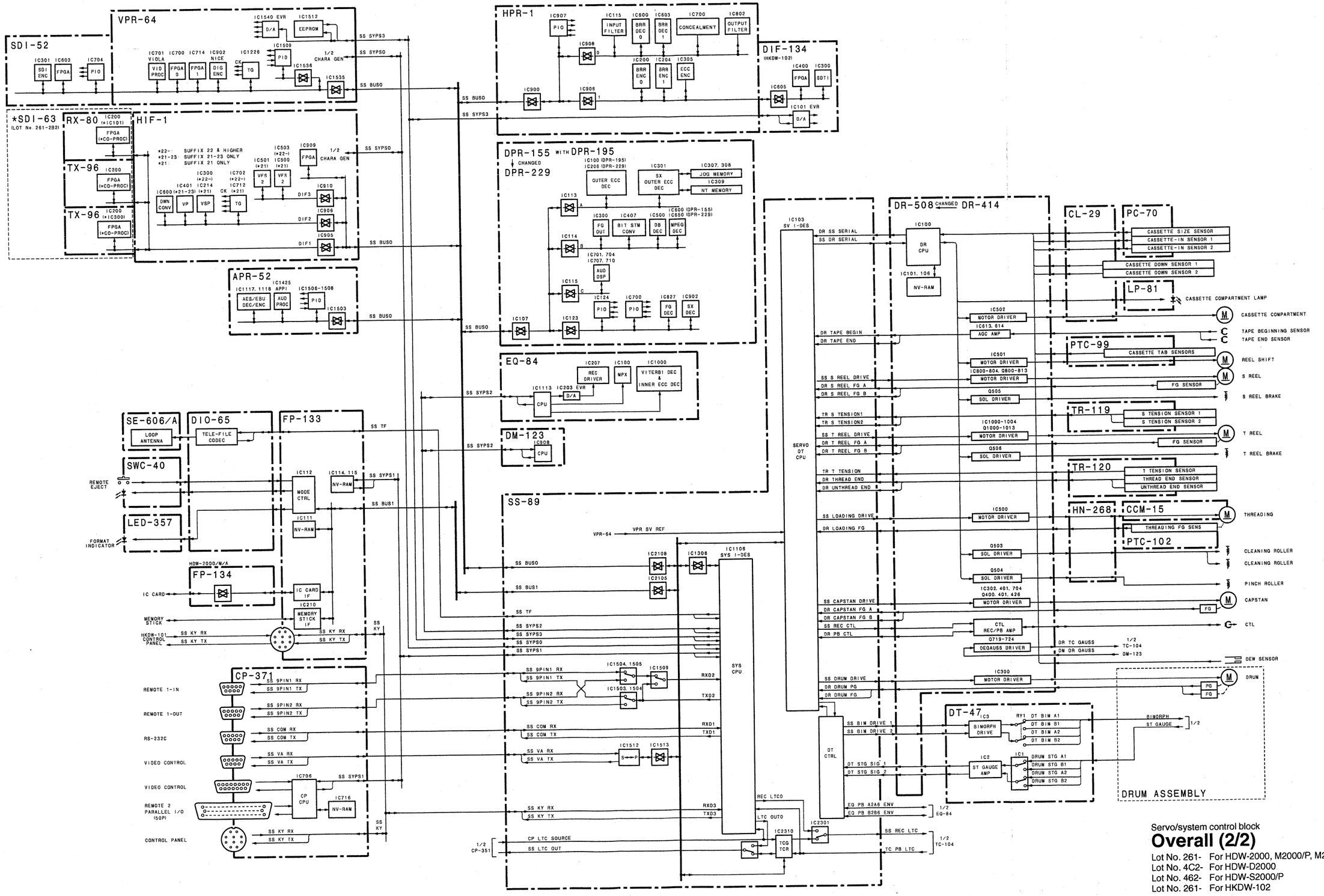

Servo/system control block

Overall (2/2)

Lot No. 261- For HDW-2000, M2000/P, M2100/P, A2100
Lot No. 4C2- For HDW-D2000
Lot No. 462- For HDW-S2000/P
Lot No. 261- For HKDW-102

3-29

Overall (1/2) DVW Series, BKMW-104

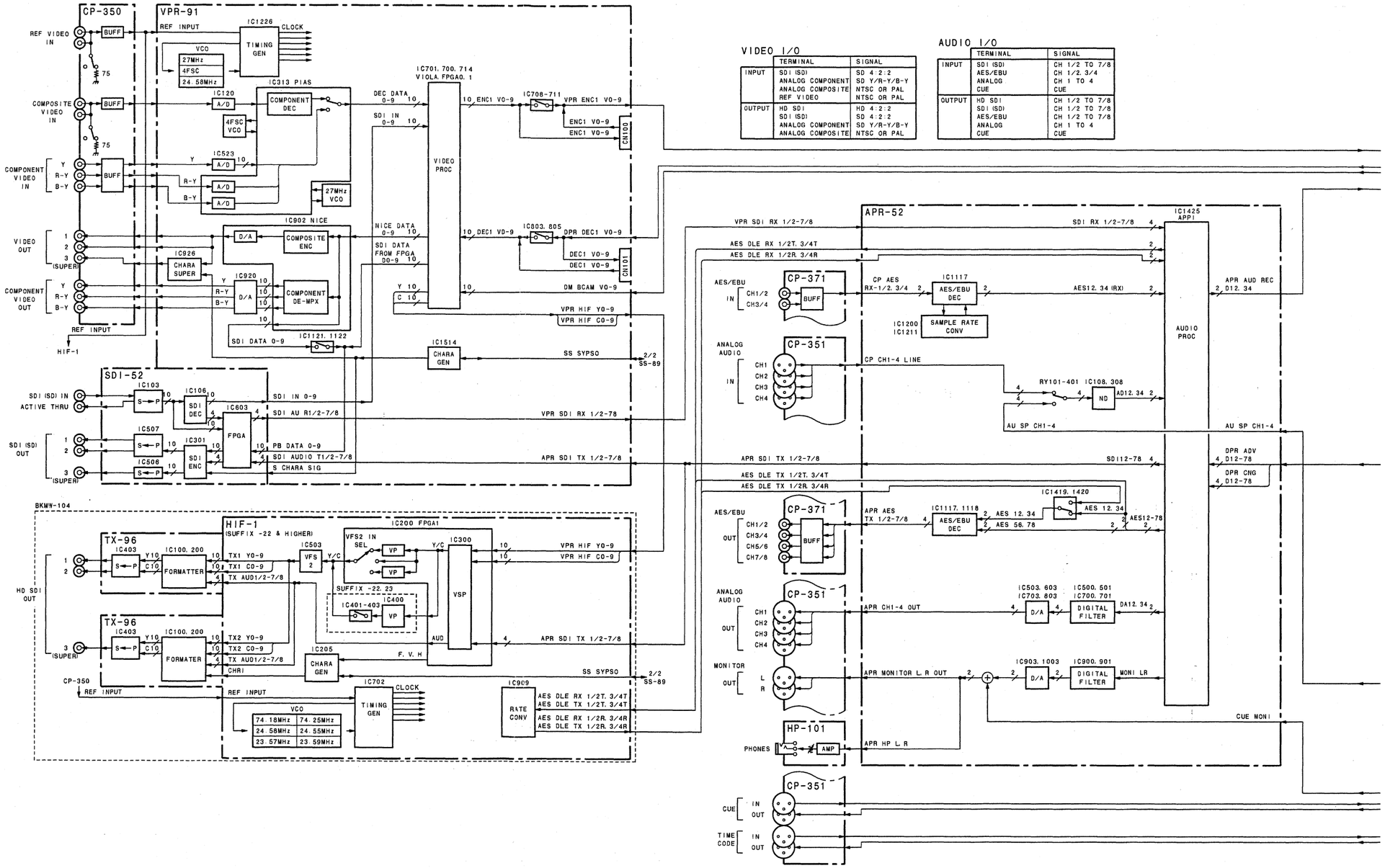

VIDEO I/O

	TERMINAL	SIGNAL
INPUT	SDI (SD)	SD 4:2:2
	ANALOG COMPONENT	SD Y/R-Y/B-Y
	ANALOG COMPOSITE	NTSC OR PAL
	REF VIDEO	NTSC OR PAL
OUTPUT	HD SDI	HD 4:2:2
	SDI (SD)	SD 4:2:2
	ANALOG COMPONENT	SD Y/R-Y/B-Y
	ANALOG COMPOSITE	NTSC OR PAL

AUDIO I/O

	TERMINAL	SIGNAL
INPUT	SDI (SD)	CH 1/2 TO 7/8
	AES/EBU	CH 1/2, 3/4
	ANALOG	CH 1 TO 4
	CUE	CUE
OUTPUT	HD SDI	CH 1/2 TO 7/8
	SDI (SD)	CH 1/2 TO 7/8
	AES/EBU	CH 1/2 TO 7/8
	ANALOG	CH 1 TO 4
	CUE	CUE

3-30

Overall (1/2) DVW Series, BKMW-104

REC/PB FORMAT

	DVW-2000/P	DVW-M2000/P
REC FORMAT	DB	DB
PB FORMAT	DB - - -	DB IMX SX AB

DB = DIGITAL BETACAM IMX = MPEG IMX
SX = BETACAM SX AB = ANALOG BETACAM

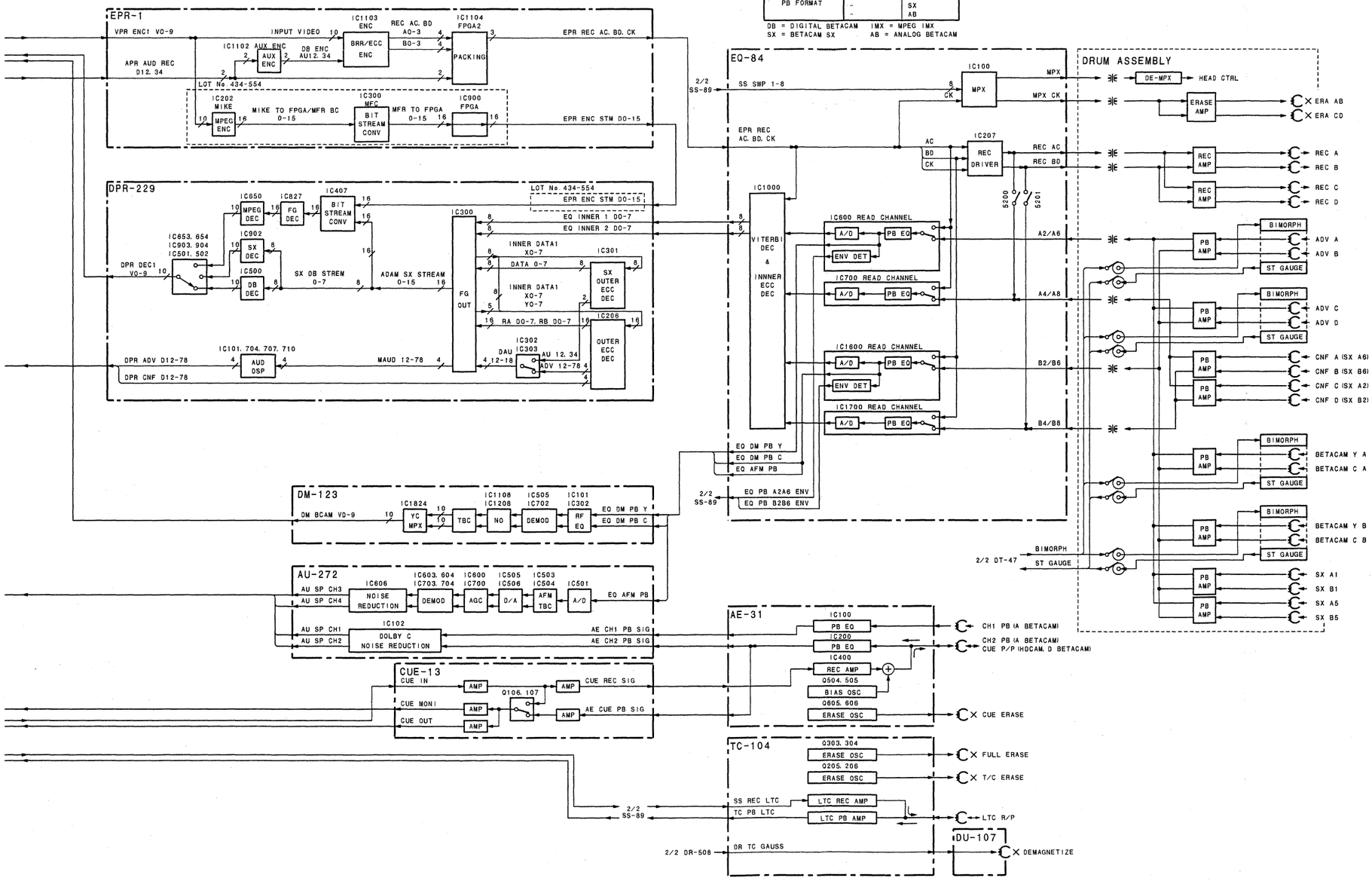

Signal processing block
Overall (1/2)
Lot No. 434- For DVW-2000/P, M2000/P
Lot No. 2B3- For BKMW-104

3-31

Overall (2/2) DVW Series, BKMW-104

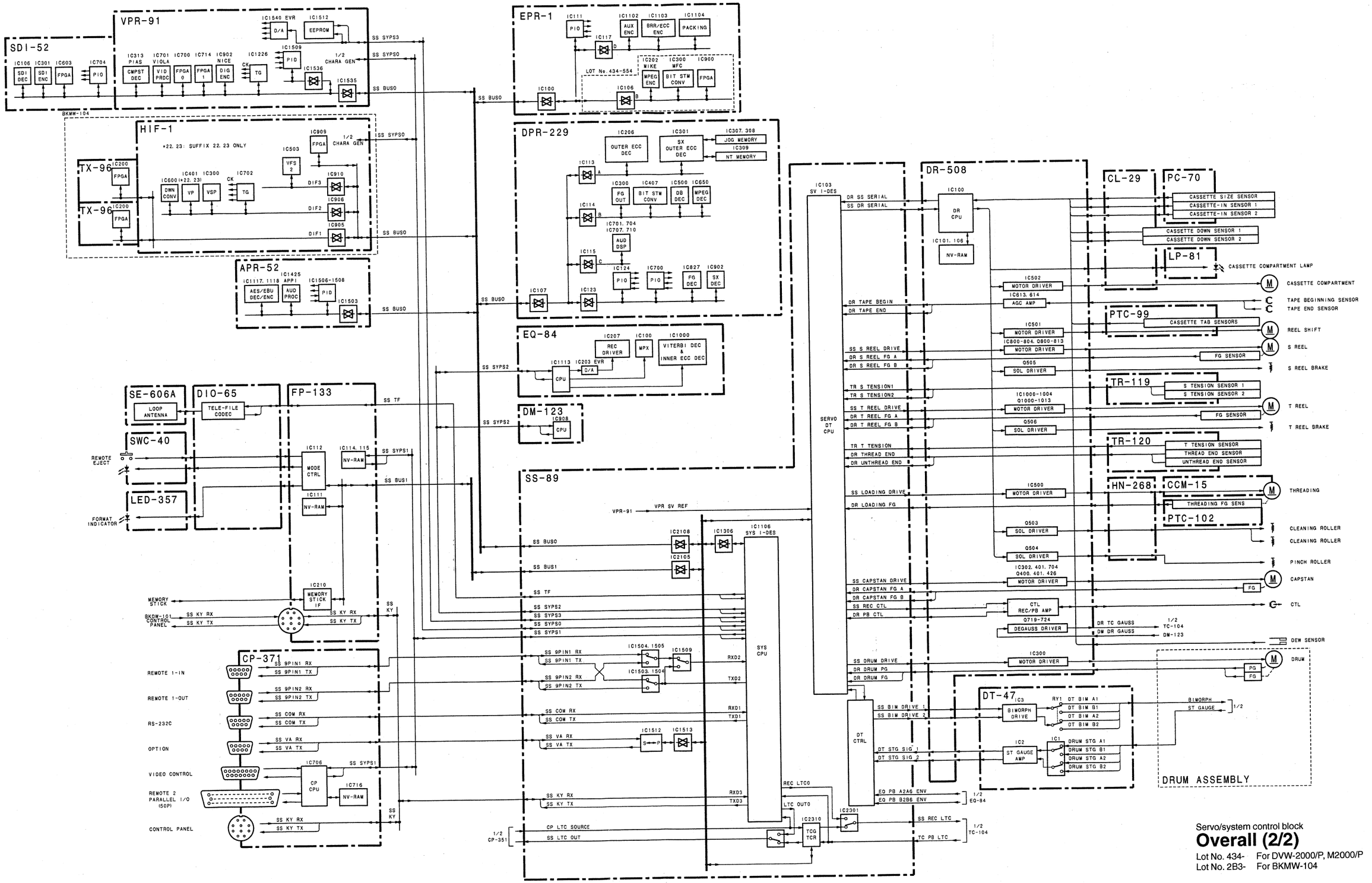

Servo/system control block

Overall (2/2)

Lot No. 434- For DVW-2000/P, M2000/P
Lot No. 2B3- For BKMW-104

Overall (1/2) MSW Series, BKMW-104, BKMW-E2000/E3000

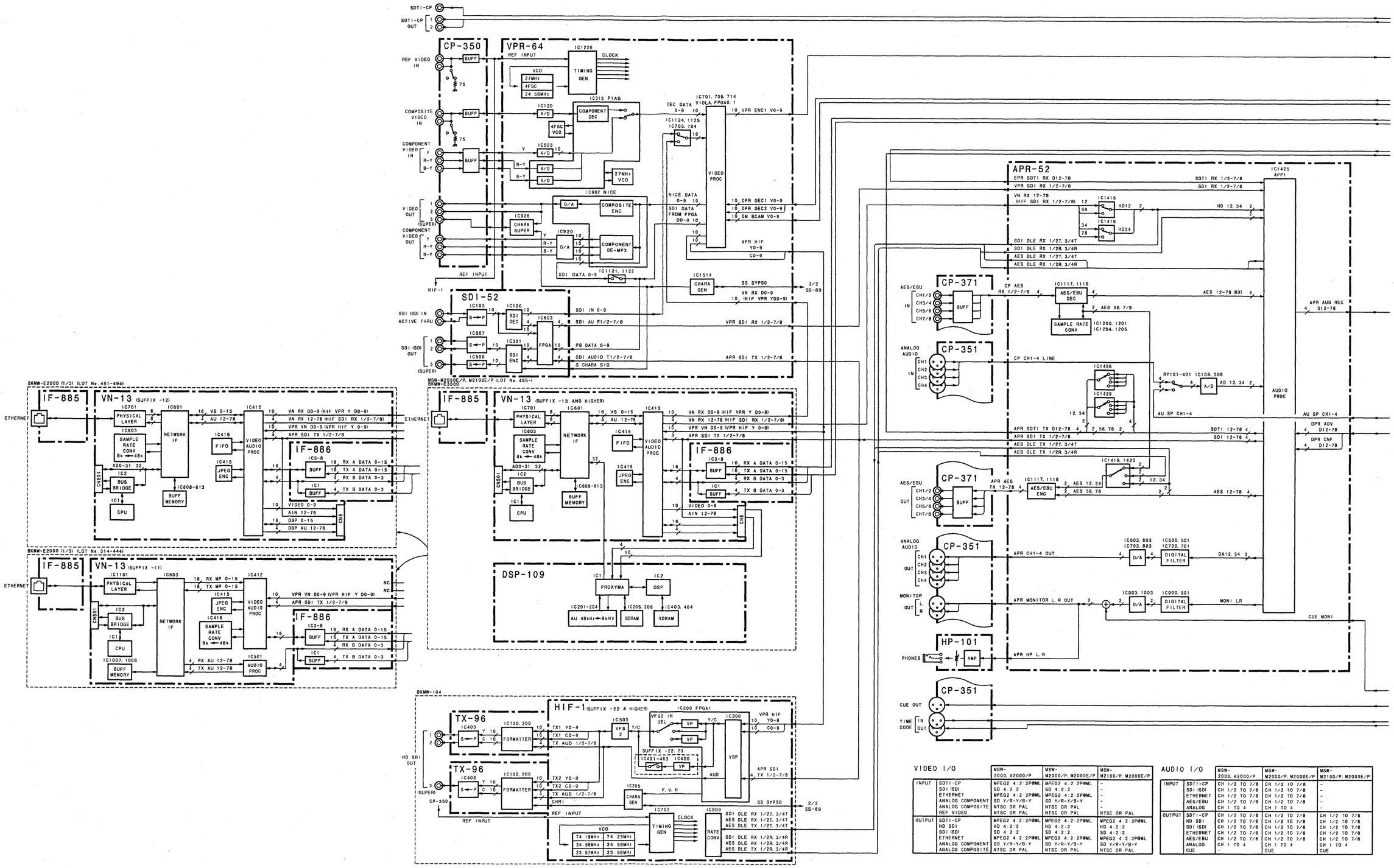

VIDEO I/O

		MSW-2000, A2000/P	MSW-M2000/P, M2000E/P	MSW-M2100/P, M2000E/P
INPUT	SDTI-CP	MPEG2 4:2:2P@ML	MPEG2 4:2:2P@ML	-
	SDI (SD)	SD 4:2:2	SD 4:2:2	-
	ETHERNET	MPEG2 4:2:2P@ML	MPEG2 4:2:2P@ML	-
	ANALOG COMPONENT	SD Y/R-Y/B-Y	SD Y/R-Y/B-Y	-
	ANALOG COMPOSITE	NTSC OR PAL	NTSC OR PAL	-
	REF VIDEO	NTSC OR PAL	NTSC OR PAL	NTSC OR PAL
OUTPUT	SDTI-CP	MPEG2 4:2:2P@ML	MPEG2 4:2:2P@ML	MPEG2 4:2:2P@ML
	HD SDI	HD 4:2:2	HD 4:2:2	HD 4:2:2
	SDI (SD)	SD 4:2:2	SD 4:2:2	SD 4:2:2
	ETHERNET	MPEG2 4:2:2P@ML	MPEG2 4:2:2P@ML	MPEG2 4:2:2P@ML
	ANALOG COMPONENT	SD Y/R-Y/B-Y	SD Y/R-Y/B-Y	SD Y/R-Y/B-Y
	ANALOG COMPOSITE	NTSC OR PAL	NTSC OR PAL	NTSC OR PAL

AUDIO I/O

		MSW-2000, A2000/P	MSW-M2000/P, M2000E/P	MSW-M2100/P, M2000E/P
INPUT	SDTI-CP	CH 1/2 TO 7/8	CH 1/2 TO 7/8	-
	SDI (SD)	CH 1/2 TO 7/8	CH 1/2 TO 7/8	-
	ETHERNET	CH 1/2 TO 7/8	CH 1/2 TO 7/8	-
	AES/EBU	CH 1/2 TO 7/8	CH 1/2 TO 7/8	-
	ANALOG	CH 1 TO 4	CH 1 TO 4	-
OUTPUT	SDTI-CP	CH 1/2 TO 7/8	CH 1/2 TO 7/8	CH 1/2 TO 7/8
	HD SDI	CH 1/2 TO 7/8	CH 1/2 TO 7/8	CH 1/2 TO 7/8
	SDI (SD)	CH 1/2 TO 7/8	CH 1/2 TO 7/8	CH 1/2 TO 7/8
	ETHERNET	CH 1/2 TO 7/8	CH 1/2 TO 7/8	CH 1/2 TO 7/8
	AES/EBU	CH 1/2 TO 7/8	CH 1/2 TO 7/8	CH 1/2 TO 7/8
	ANALOG	CH 1 TO 4	CH 1 TO 4	CH 1 TO 4
	CUE	-	CUE	CUE

3-34

Overall (1/2) MSW Series, BKMW-104, BKMW-E2000/E3000

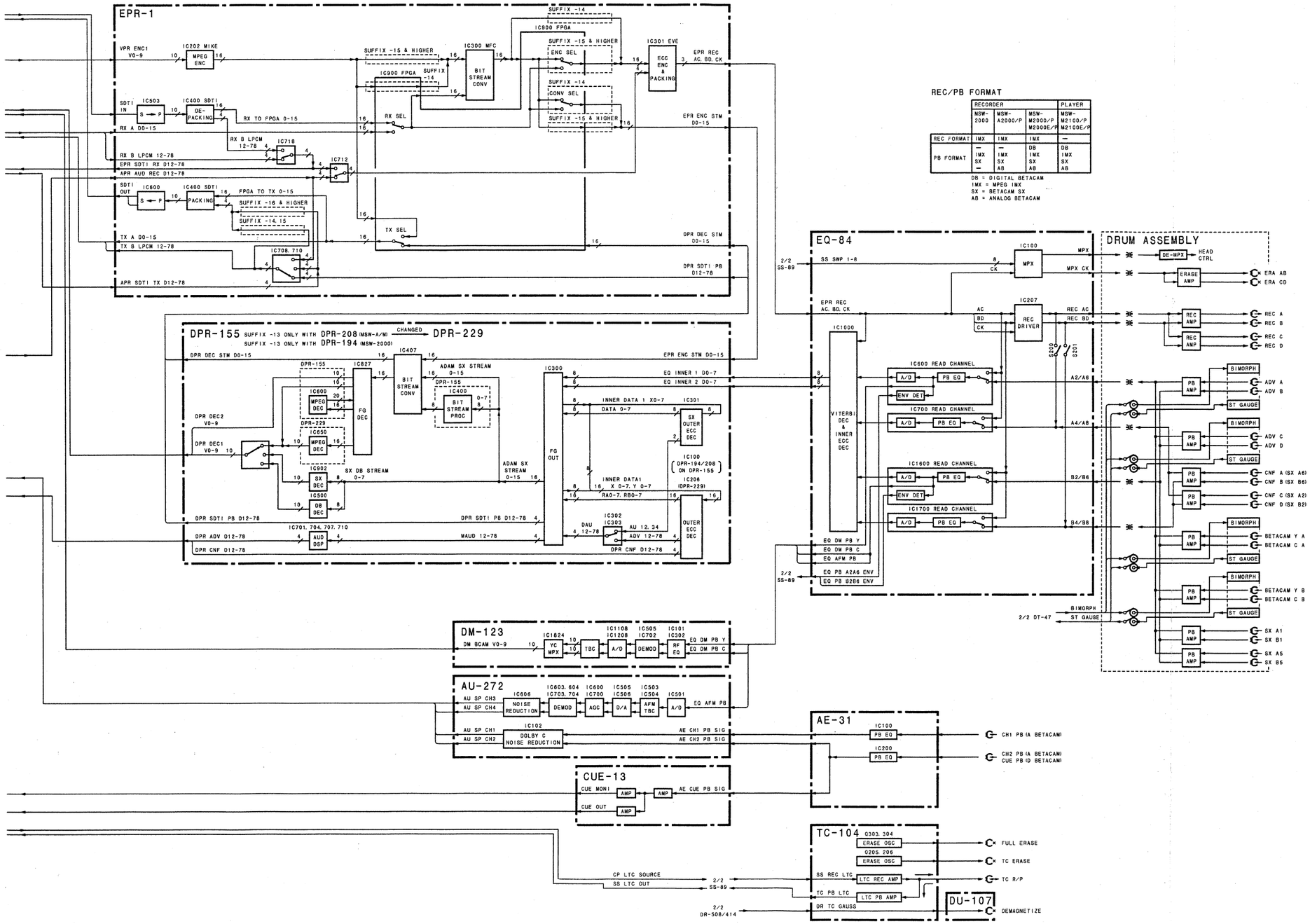

Signal processing block

Overall (1/2)

Lot No. 261- For MSW-2000, A2000/P, M2000/P, M2100/P
Lot No. 495- For MSW-M2000E/P, M2100E/P
Lot No. 2B3- For BKMW-104
Lot No. 314-394 For BKMW-E2000
Lot No. 495- For BKMW-E3000

Overall (2/2) MSW Series, BKMW-104, BKMW-E2000/E3000

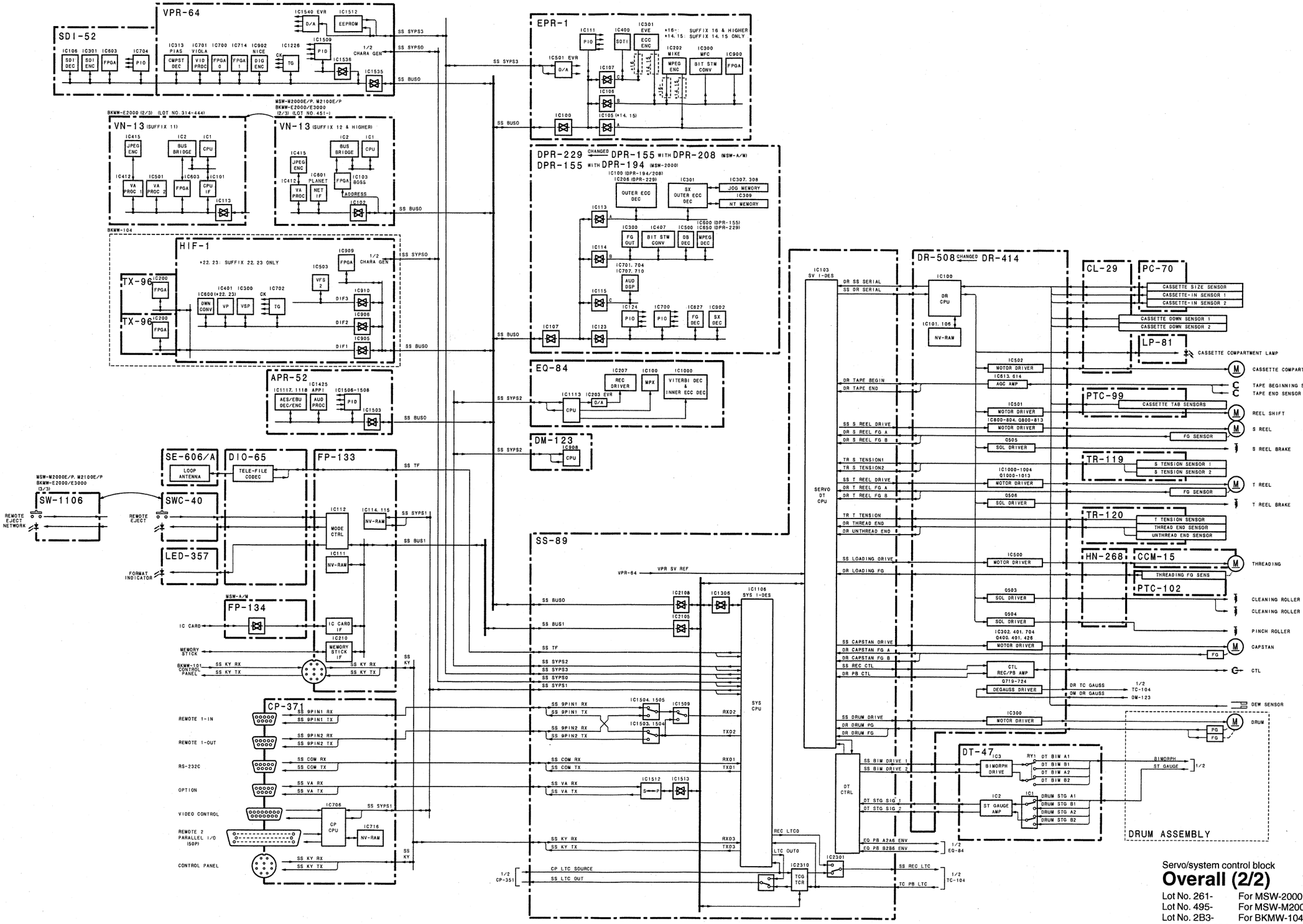

Servo/system control block

Overall (2/2)

Lot No. 261-	For MSW-2000, A2000/P, M2000/P, M2100/
Lot No. 495-	For MSW-M2000E/P, M2100E/P
Lot No. 2B3-	For BKMW-104
Lot No. 314-394	For BKMW-E2000
Lot No. 495-	For BKMW-E3000

3-37

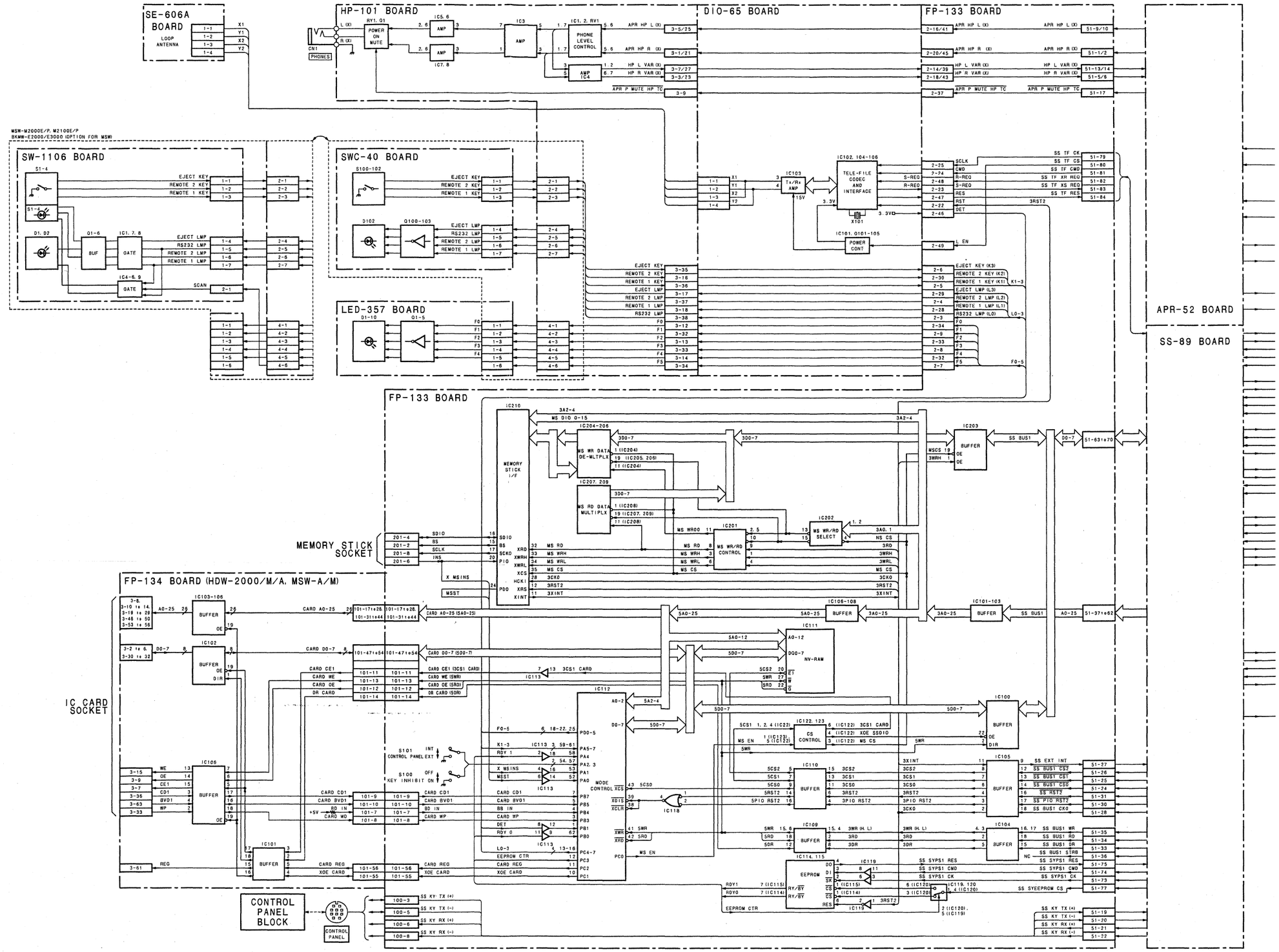
SE-606A BOARD
LOOP ANTENNA
HP-101 BOARD
POWER ON MUTE
PHONE LEVEL CONTROL
DIO-65 BOARD
FP-133 BOARD
SW-1106 BOARD
SWC-40 BOARD
LED-357 BOARD
TELE-FILE CODEC AND INTERFACE
POWER CONT
APR-52 BOARD
SS-89 BOARD
FP-133 BOARD
MEMORY STICK I/F
MS WR DATA DE-MLTPLX
MS RD DATA MULTIPLX
MS WR/RD CONTROL
MS WR/RD SELECT
MEMORY STICK SOCKET
FP-134 BOARD (HDW-2000/M/A, MSW-A/M)
IC CARD SOCKET
NV-RAM
MODE CONTROL
CS CONTROL
EEPROM
CONTROL PANEL BLOCK
CONTROL PANEL

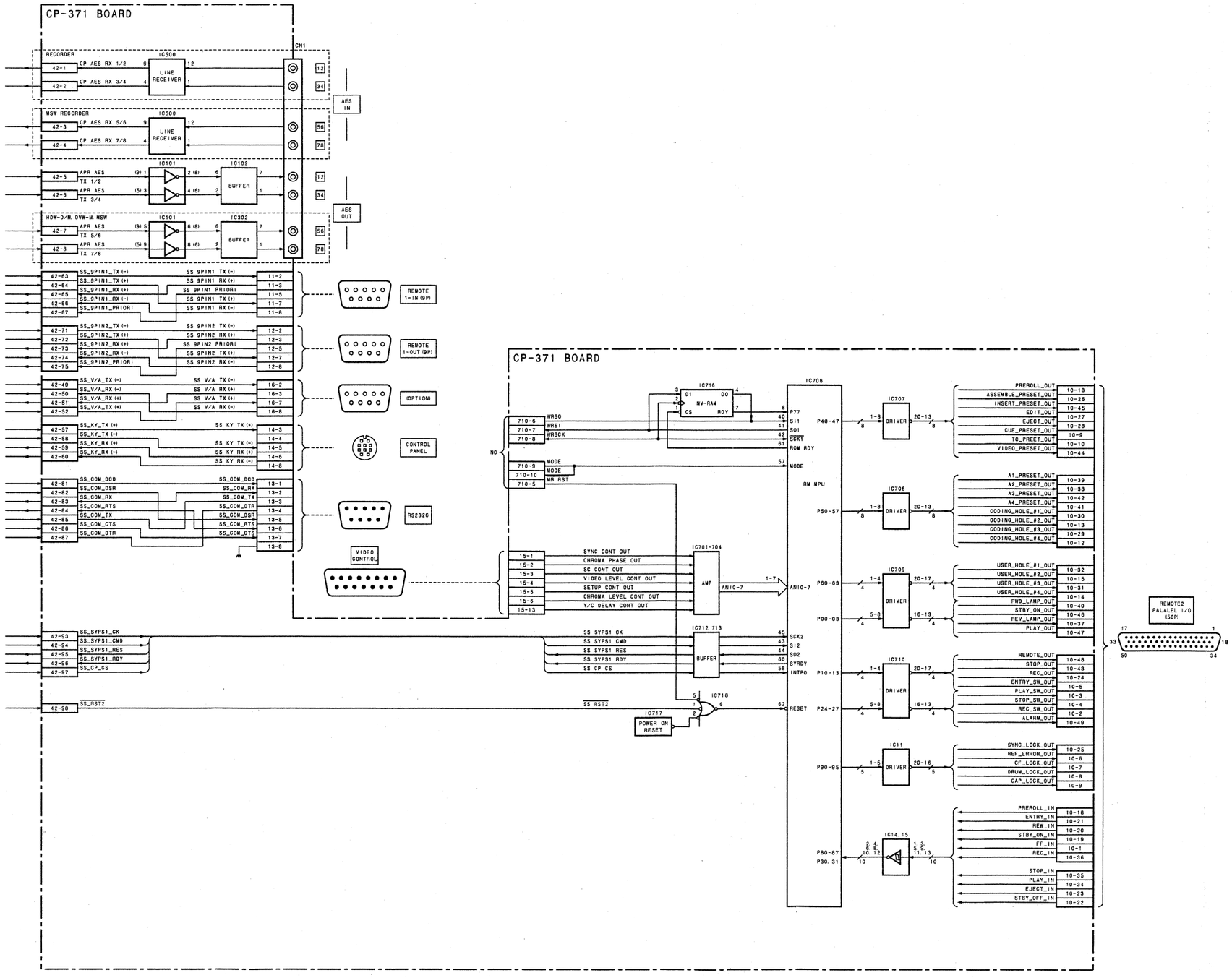

Function Control
CP-371
DIO-65
FP-133
FP-134
HP-101
LED-357
SE-606/606A
SW-1106
SWC-40
LOT NO. 261-

AE-31 HDW, DVW, MSW-A/M

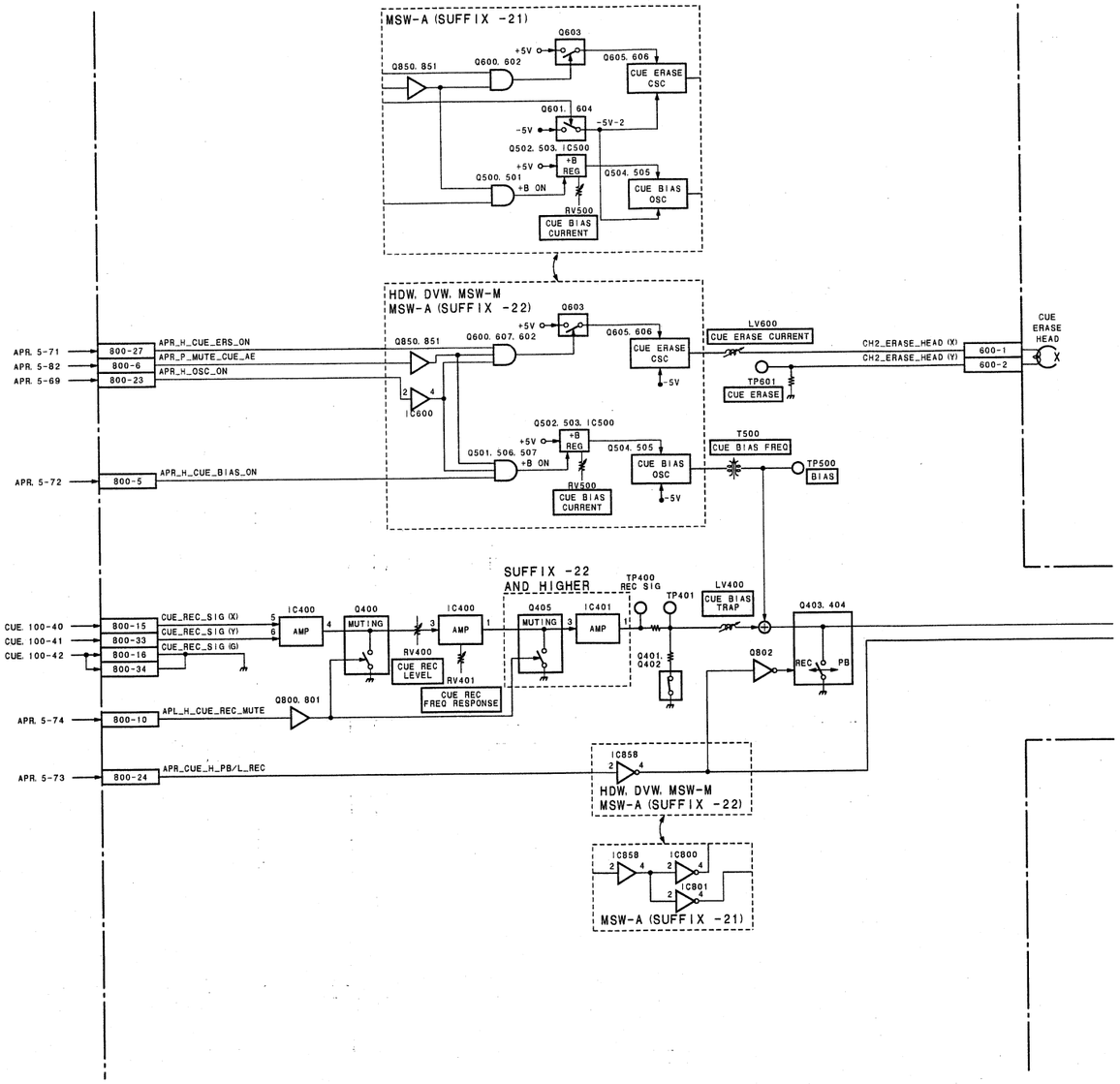

3-40

AE-31 HDW, DVW, MSW-A/M

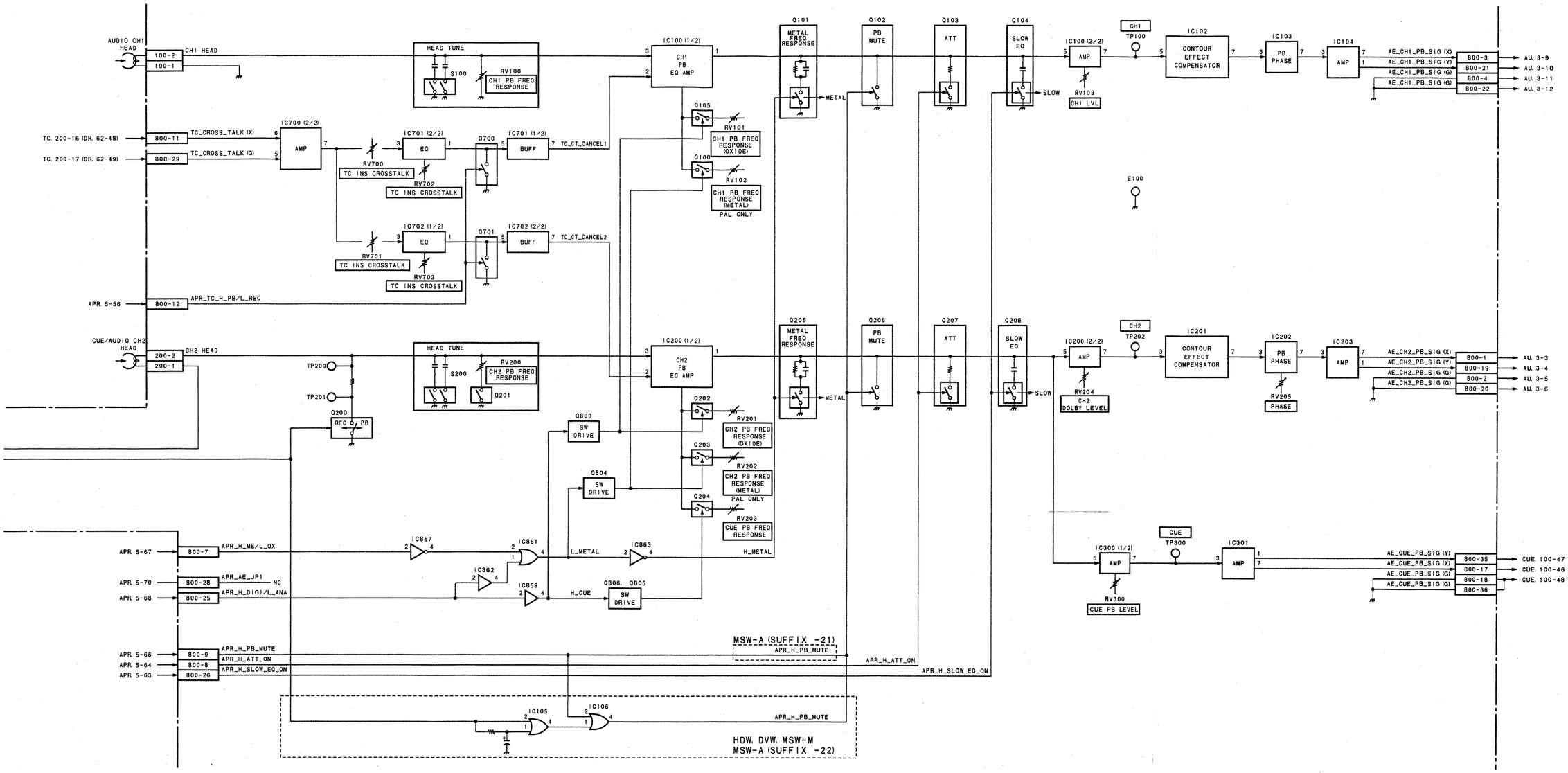

Analog BETACAM audio (LAU) PB EQ

AE-31

BOARD NO. 1-677-287-21, 22

AE-31H:	Lot No. 261-	For HDW-2000, M2000, M2100, A210
	Lot No. 4C2-	For HDW-D2000
	Lot No. 462-	For HDW-S2000
	Lot No. 434-	For DVW-2000, M2000
	Lot No. 341-	For MSW-A2000
	Lot No. 261-	For MSW-M2000, M2100
	Lot No. 495-	For MSW-M2000E, M2100E
AE-31HP:	Lot No. 261-	For HDW-M2000P, M2100P
	Lot No. 462-	For HDW-S2000P
	Lot No. 434-	For DVW-2000P, M2000P
	Lot No. 341-	For MSW-A2000P
	Lot No. 261-	For MSW-M2000P, M2100P
	Lot No. 495-	For MSW-M2000EP, M2100EP

BOARD NO. 1-677-287-11

AE-31:	Lot No. 261-334	For MSW-A2000
AE-31P:	Lot No. 261-334	For MSW-A2000P

3-41

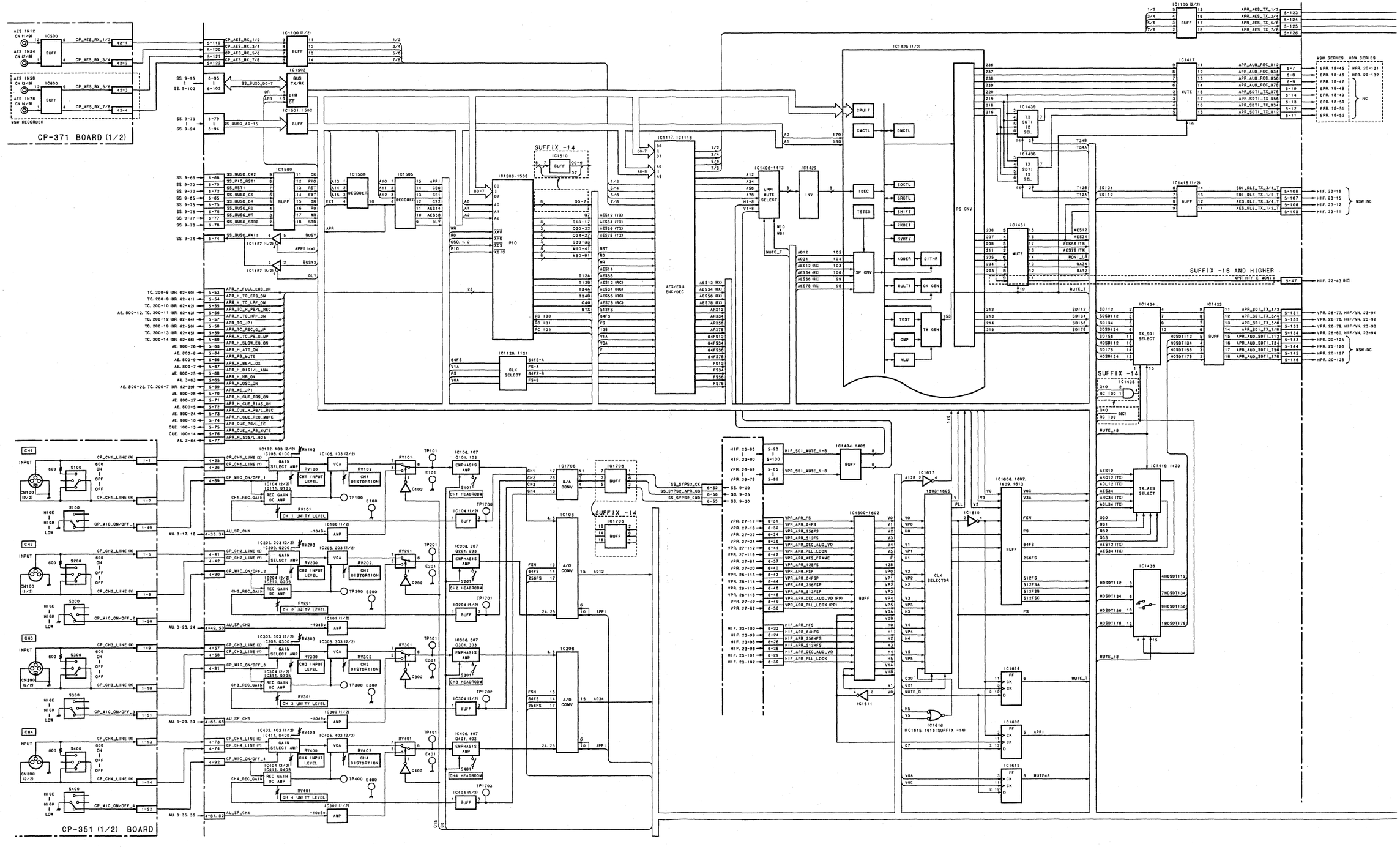
CP-371 BOARD (1/2)
CP-351 (1/2) BOARD
SUFFIX -14
SUFFIX -16 AND HIGHER
MSW SERIES
HDW SERIES
MSW:NC
NC

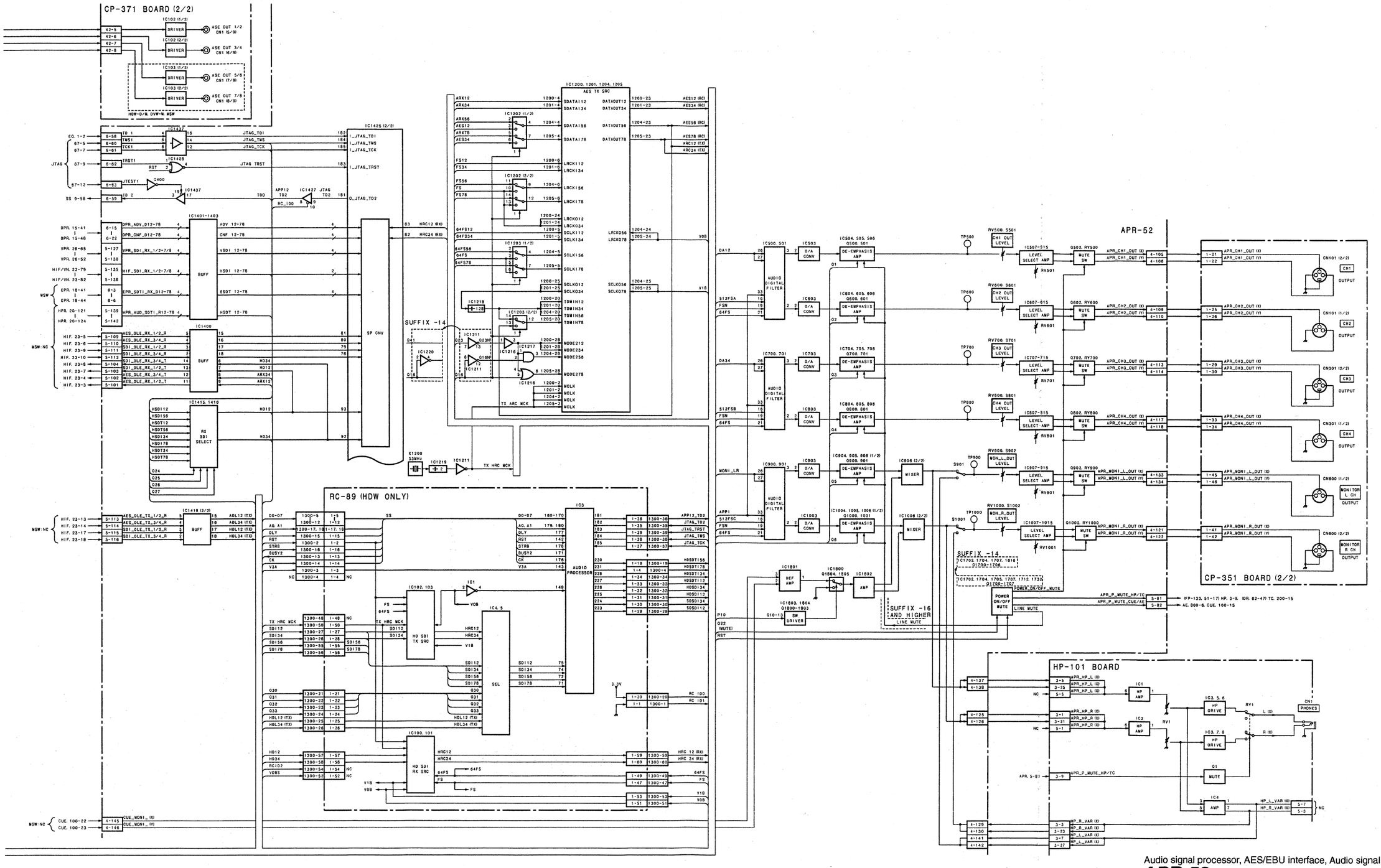

Audio signal processor, AES/EBU interface, Audio signal A-D/D-A

APR-52

Lot No. 261- For HDW-2000, M2000/P
Lot No. 4C2- For HDW-D2000
Lot No. 462- For HDW-S2000/P
Lot No. 434- For DVW-2000/P, M2000/P
Lot No. 261- For MSW-2000, A2000/P, M2000/P
Lot No. 495- For MSW-M2000E/P

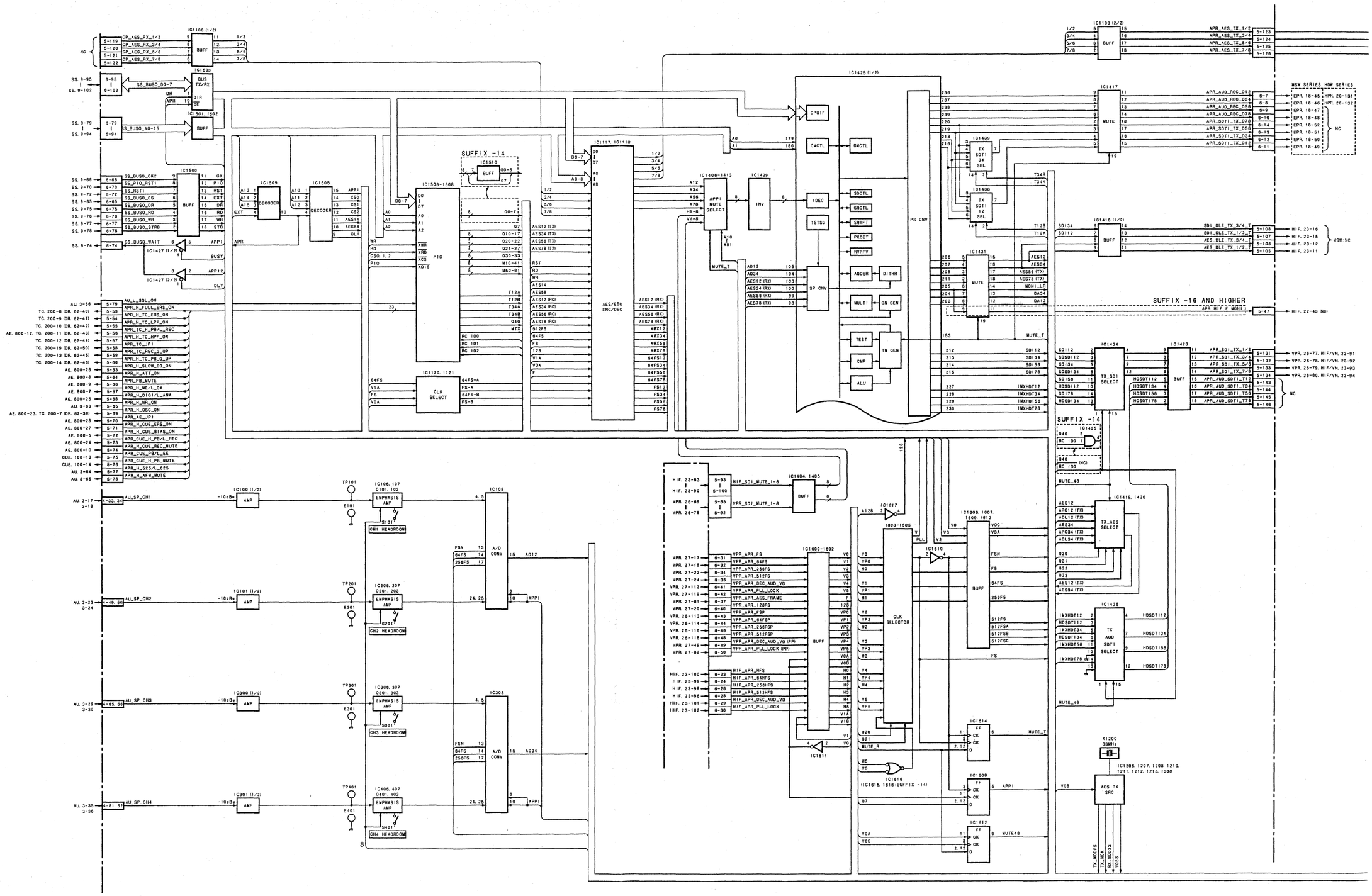
SUFFIX -14
SUFFIX -16 AND HIGHER
MSW SERIES
HDW SERIES
CPUIF
CMCTL
DMCTL
IDEC
TSTSG
SP CNV
PS CNV
MUTE
TX_SDI SELECT
TX_AES SELECT
TX AUD SDTI SELECT
AES RX SRC
CLK SELECTOR
A/D CONV
EMPHASIS AMP
CH1 HEADROOM
CH2 HEADROOM
CH3 HEADROOM
CH4 HEADROOM
AES/EBU ENC/DEC
CLK SELECT
PIO
DECODER
BUFF
AMP
INV
X1200 33MHz

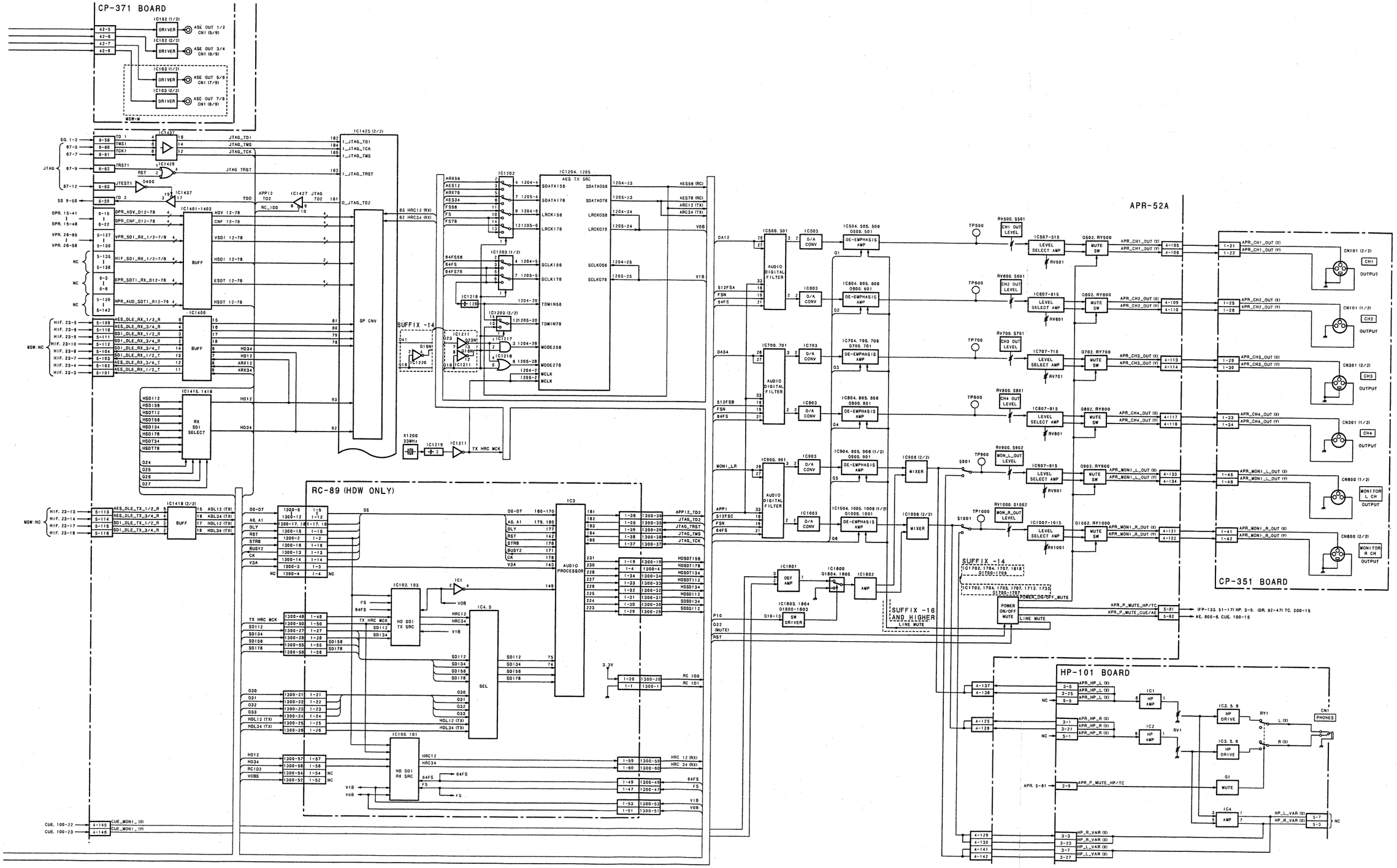

Audio signal processor, AES/EBU interface, Audio signal A-D/D-A

APR-52A

Lot No. 261- For HDW-M2100/P, A2100
For MSW-M2100/P
Lot No. 495- For MSW-2100E/P

AU-272 HDW-M/S/A, DVW-M, MSW-A/M

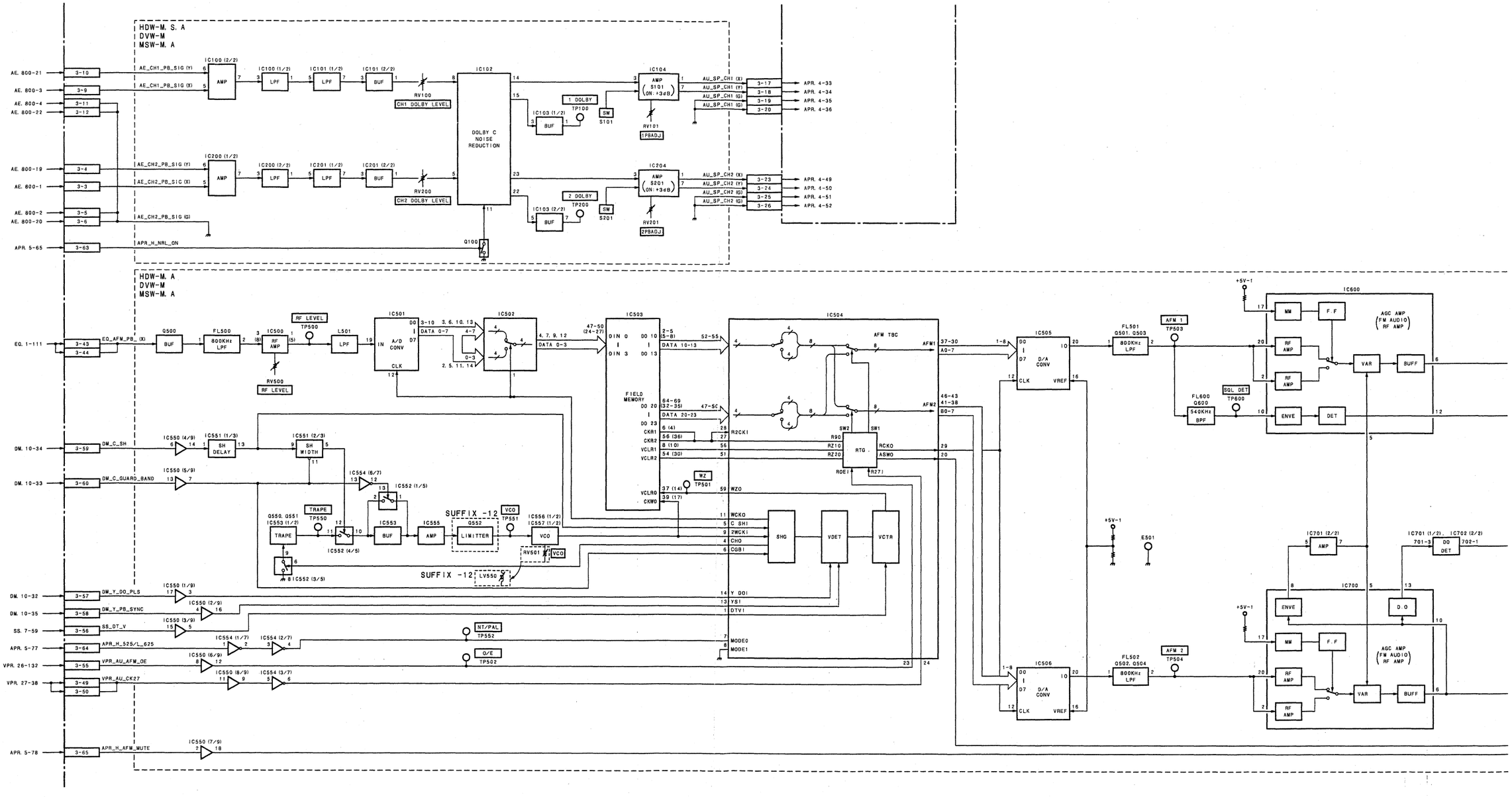

3-46

AU-272 HDW-M/S/A, DVW-M, MSW-A/M

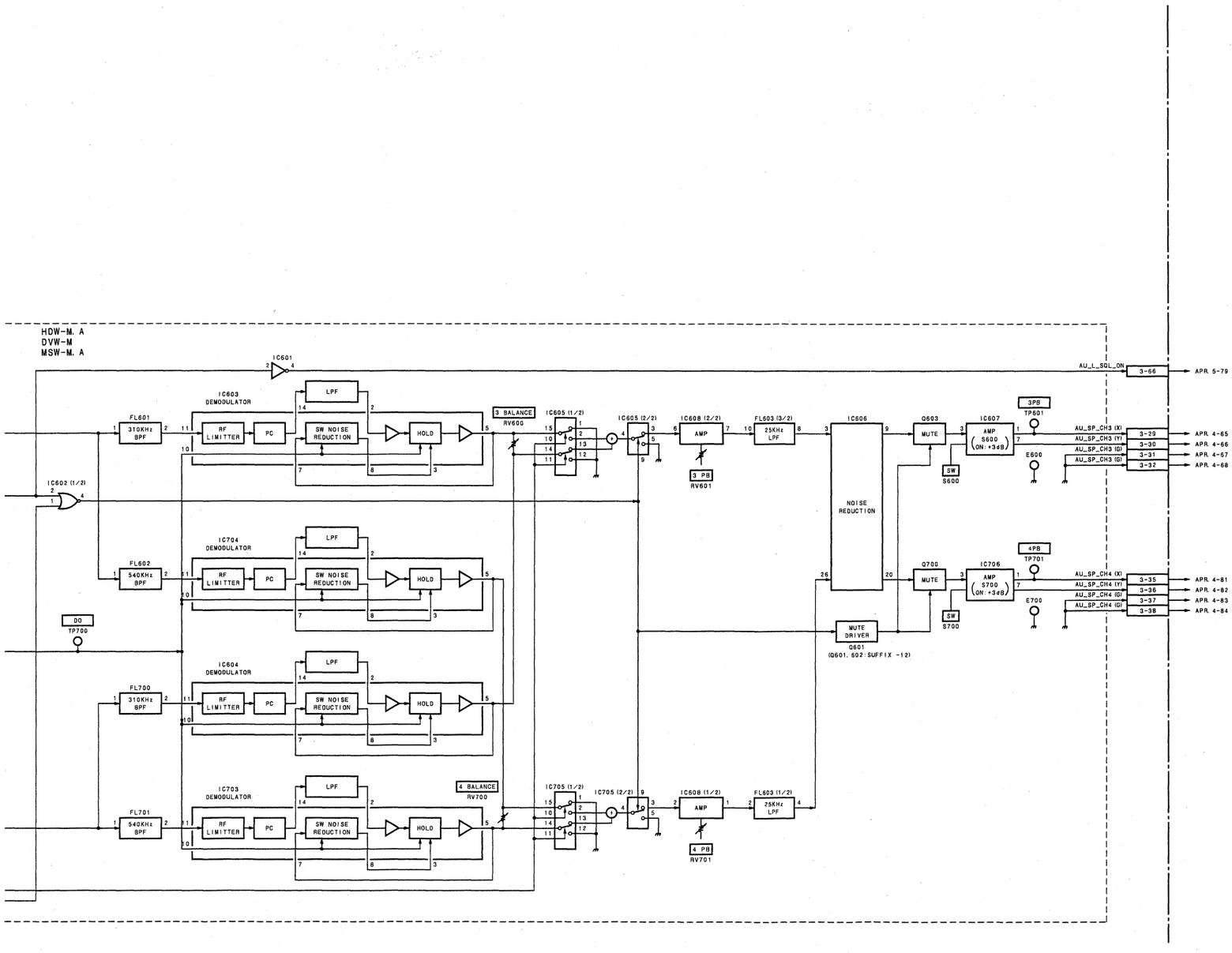

Analog BETACAM audio (LAU and AFM) PB circuit

AU-272

AU-272: Lot No. 261- For HDW-M2000/P, M2100/P, A2100
Lot No. 434- For DVW-M2000/P
Lot No. 261- For MSW-A2000/P, M2000/P, M2100/P
Lot No. 495- For MSW-M2000E/P, M2100E/P
AU-272HS: Lot No. 462- For HDW-S2000/P

3-47

CUE-13 HDW, DVW, MSW-M

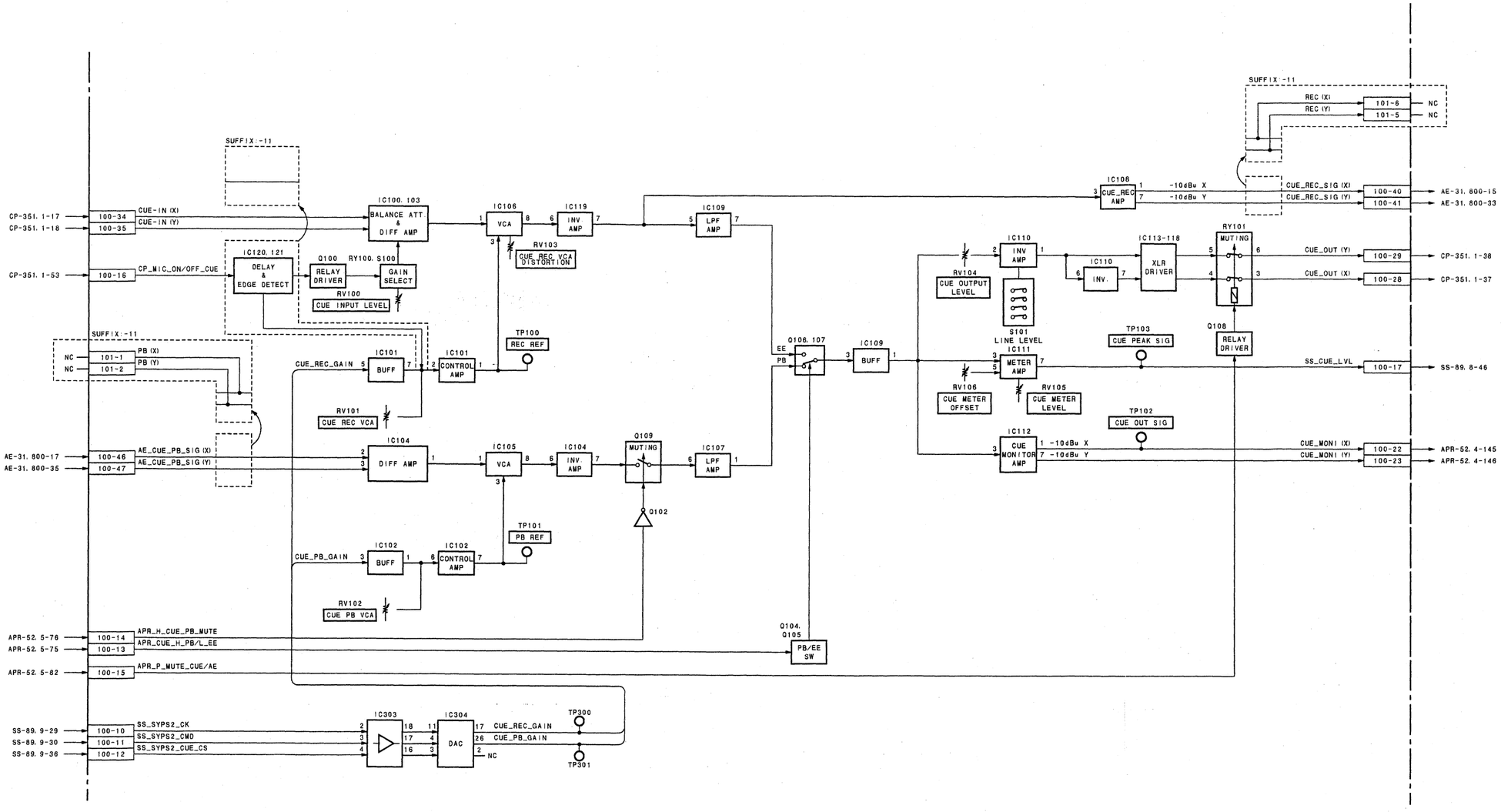

Cue REC/PB

CUE-13

Lot No. 261- For HDW-2000, M2000/P, M2100/P, A2100
Lot No. 4C2- For HDW-D2000
Lot No. 462- For HDW-S2000/P
Lot No. 434- For DVW-2000/P, M2000/P
Lot No. 261- For MSW-M2000/P, M2100/P
Lot No. 495- For MSW-M2000E/P, M2100E/P

3-49

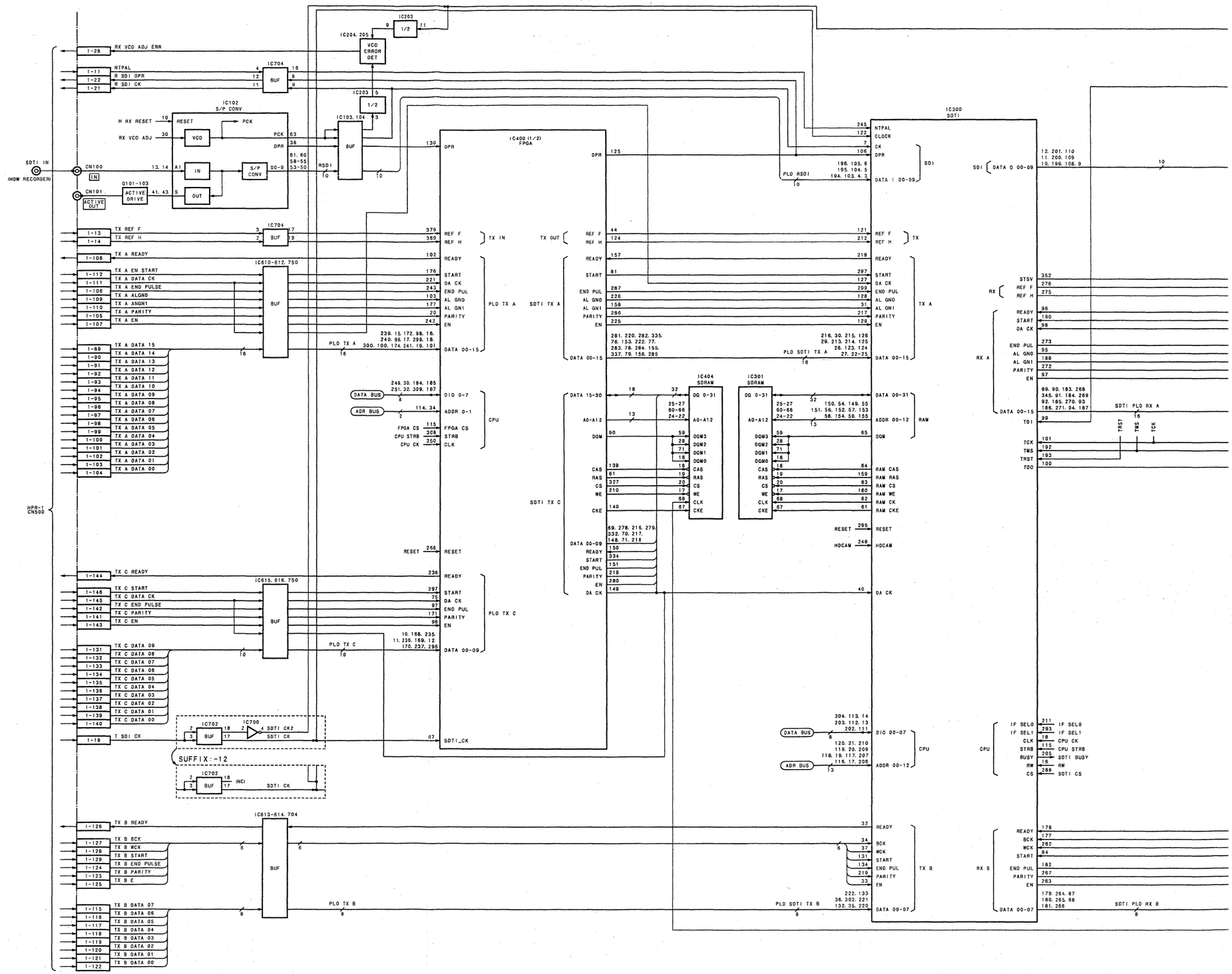
SDTI IN
(HDW RECORDER)
CN100
IN
CN101
ACTIVE OUT
Q101-103
ACTIVE DRIVE
IC102
S/P CONV
RESET
PCK
VCO
IN
OUT
S/P CONV
H RX RESET
RX VCO ADJ
RSDI
IC103, 104
BUF
IC203
1/2
IC204, 205
VCO ERROR DET
IC704
BUF
IC810-612, 750
IC815, 616, 750
IC702
IC700
SDTI CK2
SDTI CK
(INC)
SUFFIX:-12
HPA-1
CN500
RX VCO ADJ ERR
NTPAL
R SDI DPR
R SDI CK
TX REF F
TX REF H
TX A READY
TX A EN START
TX A DATA CK
TX A END PULSE
TX A ALGND
TX A ANGN1
TX A PARITY
TX A EN
TX A DATA 15
TX A DATA 14
TX A DATA 13
TX A DATA 12
TX A DATA 11
TX A DATA 10
TX A DATA 09
TX A DATA 08
TX A DATA 07
TX A DATA 06
TX A DATA 05
TX A DATA 04
TX A DATA 03
TX A DATA 02
TX A DATA 01
TX A DATA 00
TX C READY
TX C START
TX C DATA CK
TX C END PULSE
TX C PARITY
TX C EN
TX C DATA 09
TX C DATA 08
TX C DATA 07
TX C DATA 06
TX C DATA 05
TX C DATA 04
TX C DATA 03
TX C DATA 02
TX C DATA 01
TX C DATA 00
T SDI CK
TX B READY
TX B BCK
TX B WCK
TX B START
TX B END PULSE
TX B PARITY
TX B E
TX B DATA 07
TX B DATA 06
TX B DATA 05
TX B DATA 04
TX B DATA 03
TX B DATA 02
TX B DATA 01
TX B DATA 00
IC400 (1/2) FPGA
PLD TX A
PLD TX C
PLD TX B
CPU
DATA BUS
ADR BUS
FPGA CS
CPU STRB
CPU CK
RESET
SDTI_CK
IC404 SDRAM
IC301 SDRAM
SDTI TX A
SDTI TX C
PLD SDTI TX A
PLD SDTI TX B
RAM
IC300 SDTI
SDI
DATA I 00-09
DATA O 00-09
HDCAM
DA CK
SDTI PLD RX A
SDTI PLD RX B
IF SEL0
IF SEL1
CPU CK
CPU STRB
SDTI BUSY
RW
SDTI CS

DIF-134 HKDW-102 (Option for HDW)

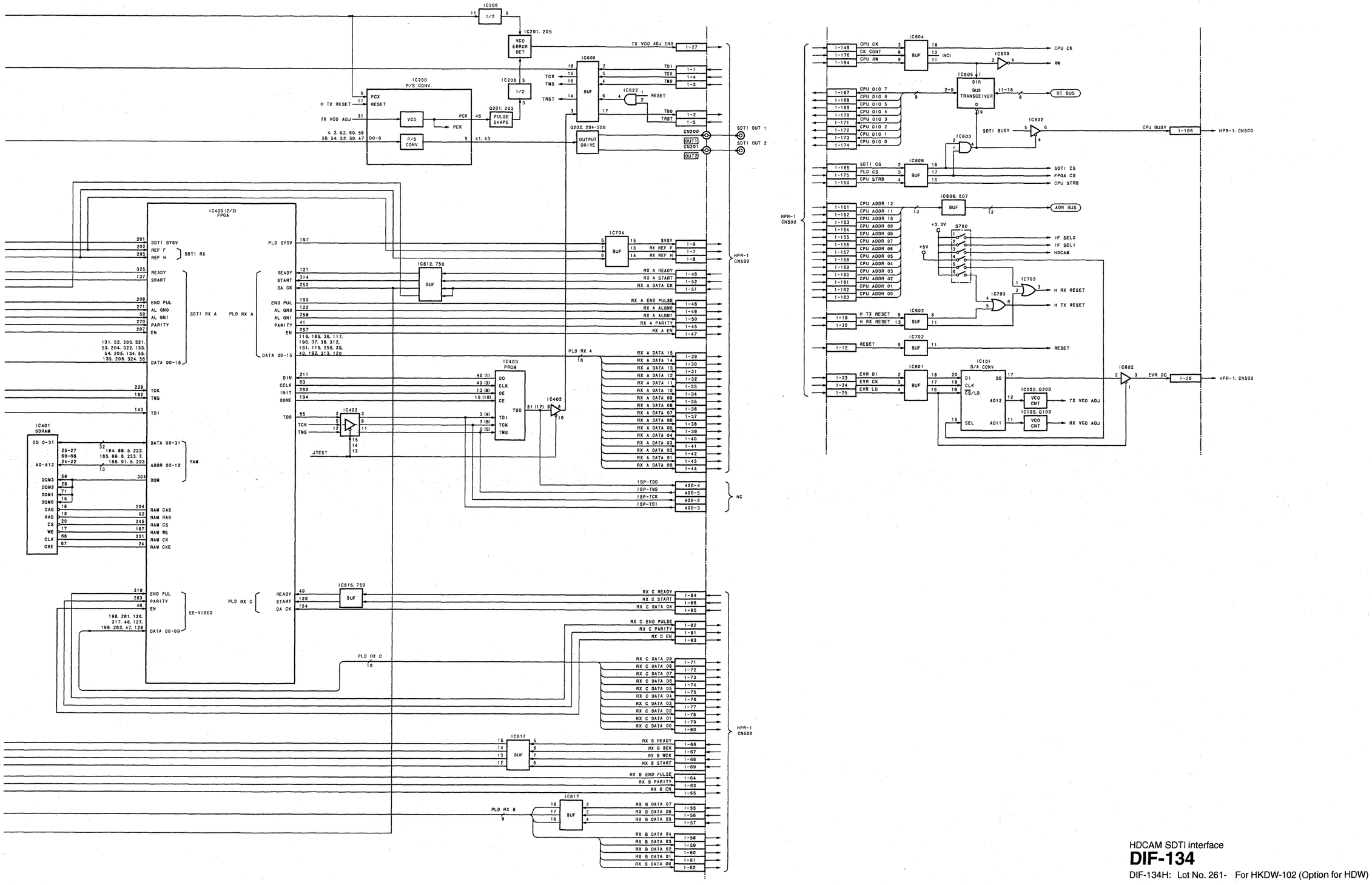

HDCAM SDTI interface

DIF-134

DIF-134H: Lot No. 261- For HKDW-102 (Option for HDW)

DM-123 (1/4) HDW-M/S/A, DVW-M, MSW-A/M

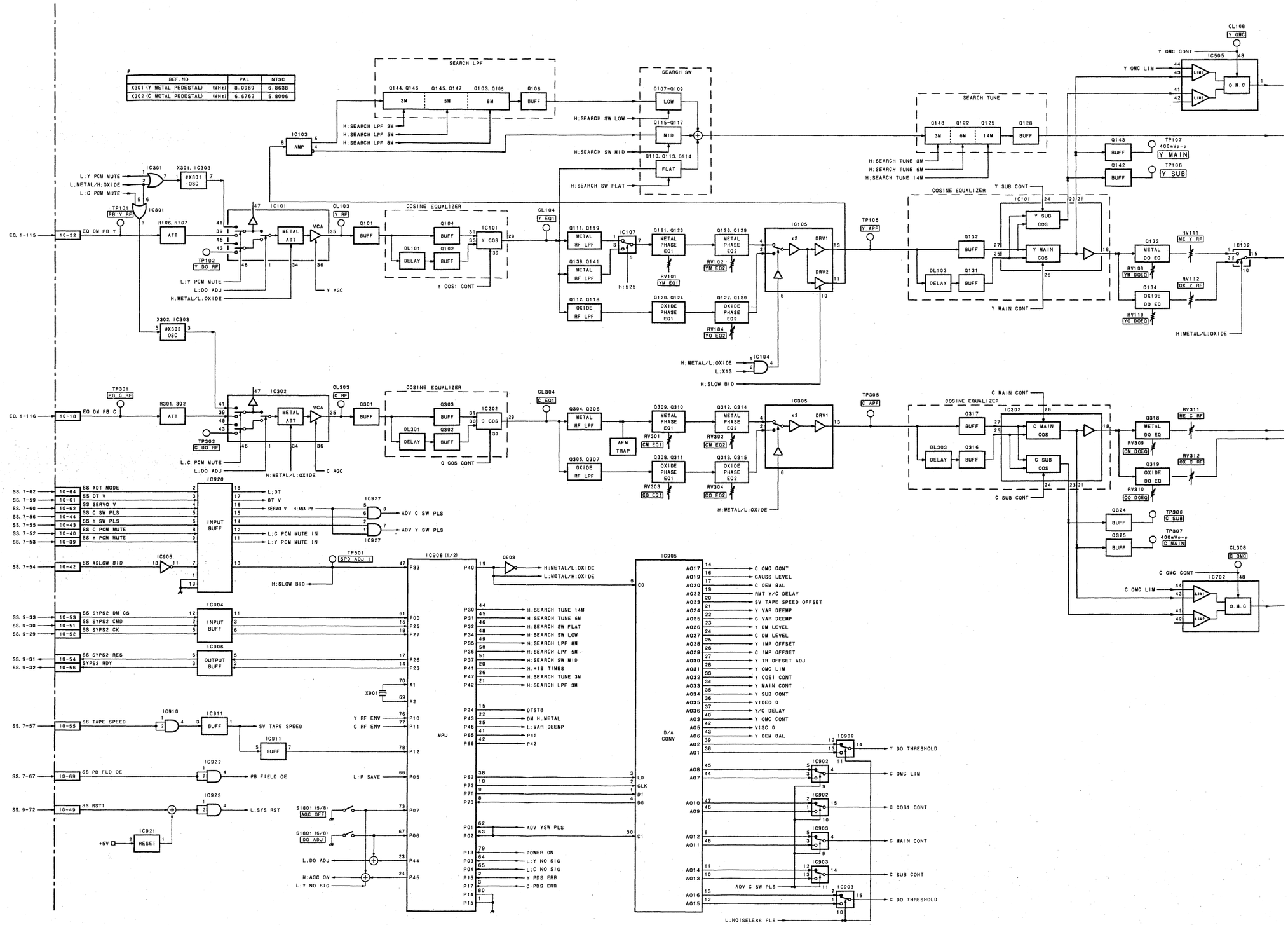

3-52

DM-123 (1/4) HDW-M/S/A, DVW-M, MSW-A/M

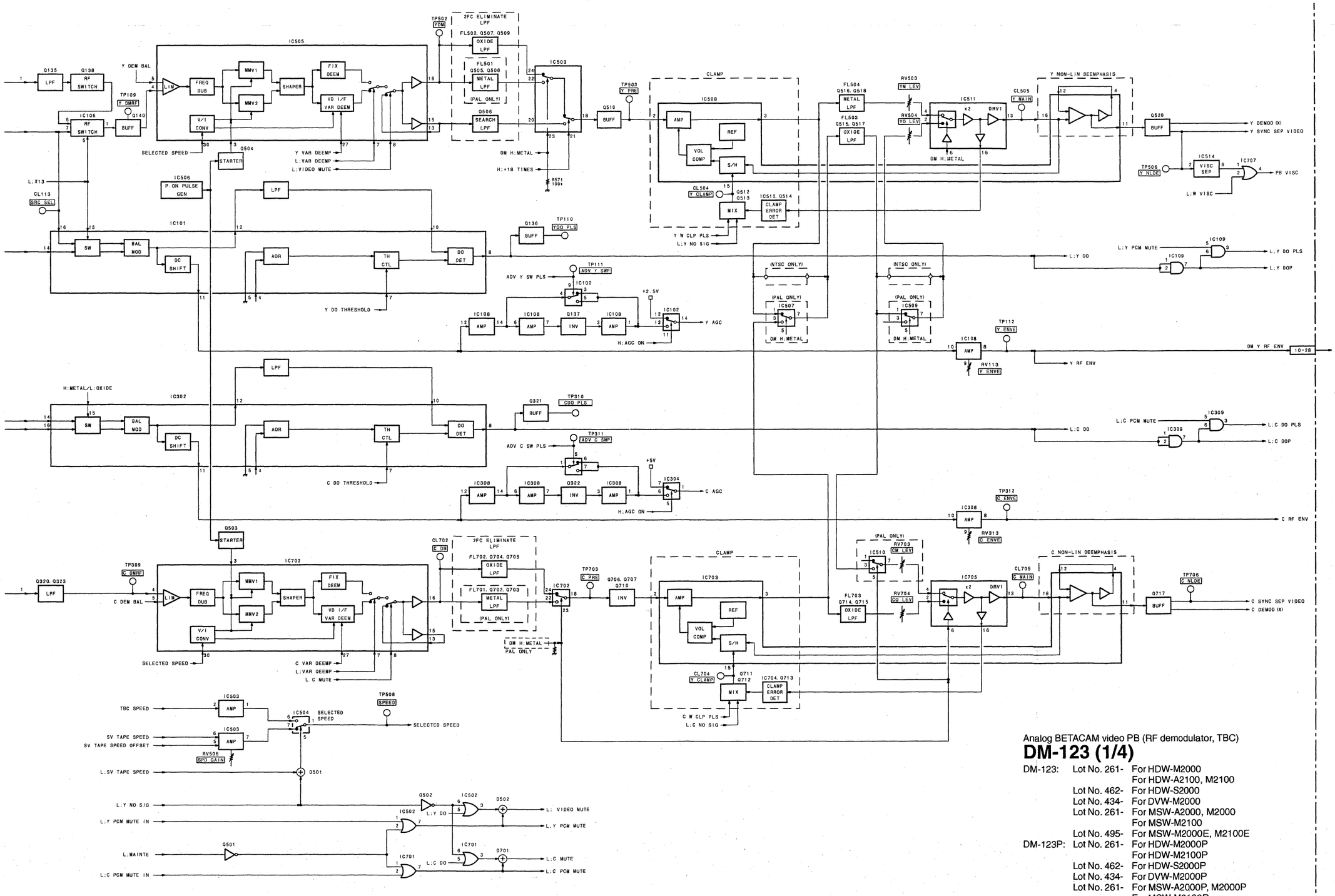

Analog BETACAM video PB (RF demodulator, TBC)

DM-123 (1/4)

DM-123: Lot No. 261- For HDW-M2000
For HDW-A2100, M2100
Lot No. 462- For HDW-S2000
Lot No. 434- For DVW-M2000
Lot No. 261- For MSW-A2000, M2000
For MSW-M2100
Lot No. 495- For MSW-M2000E, M2100E

DM-123P: Lot No. 261- For HDW-M2000P
For HDW-M2100P
Lot No. 462- For HDW-S2000P
Lot No. 434- For DVW-M2000P
Lot No. 261- For MSW-A2000P, M2000P
For MSW-M2100P
Lot No. 495- For MSW-M2000EP, M2100EP

DM-123 (2/4) HDW-M/S/A, DVW-M, MSW-A/M

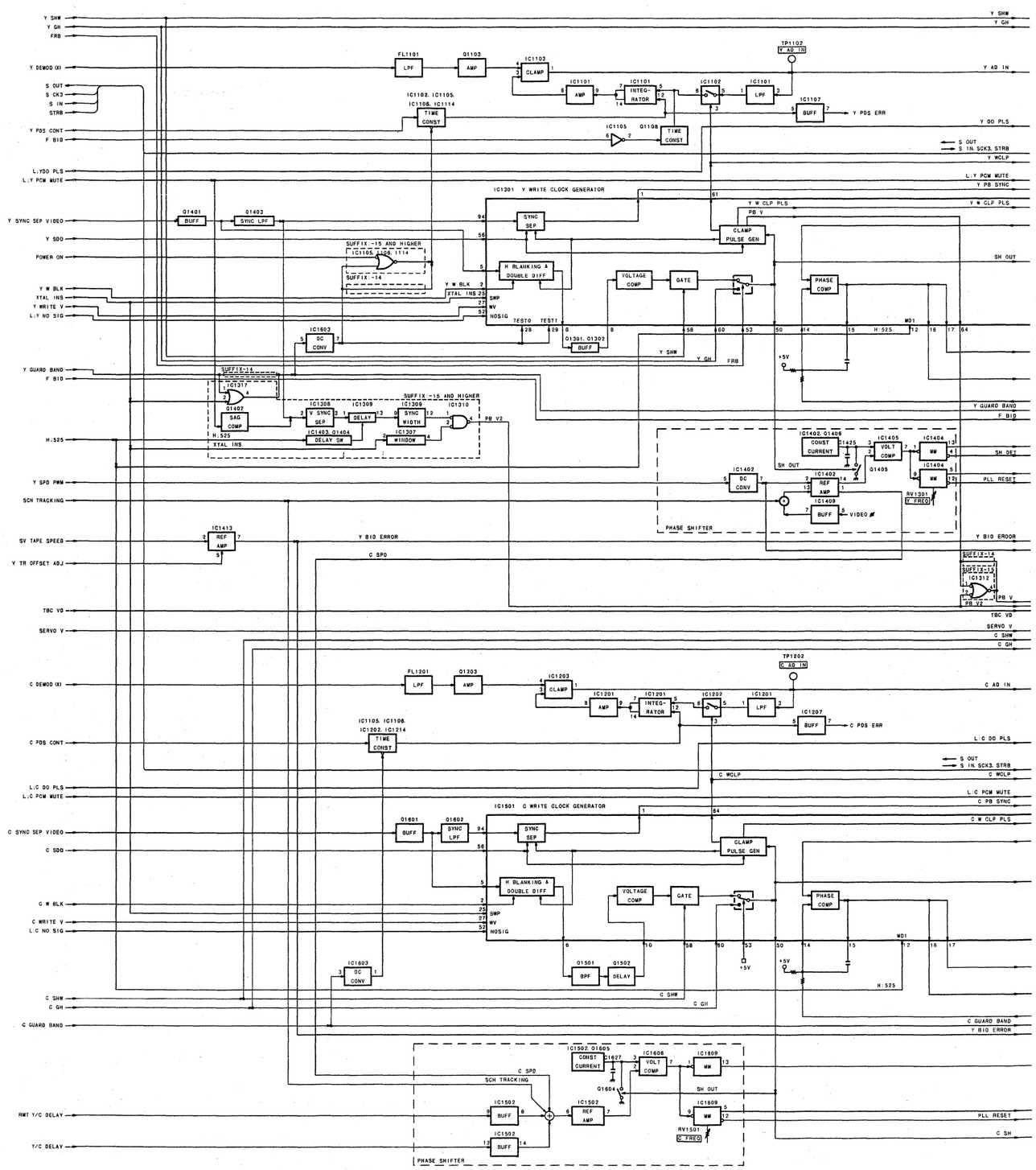

3-54

DM-123 (2/4) HDW-M/S/A, DVW-M, MSW-A/M

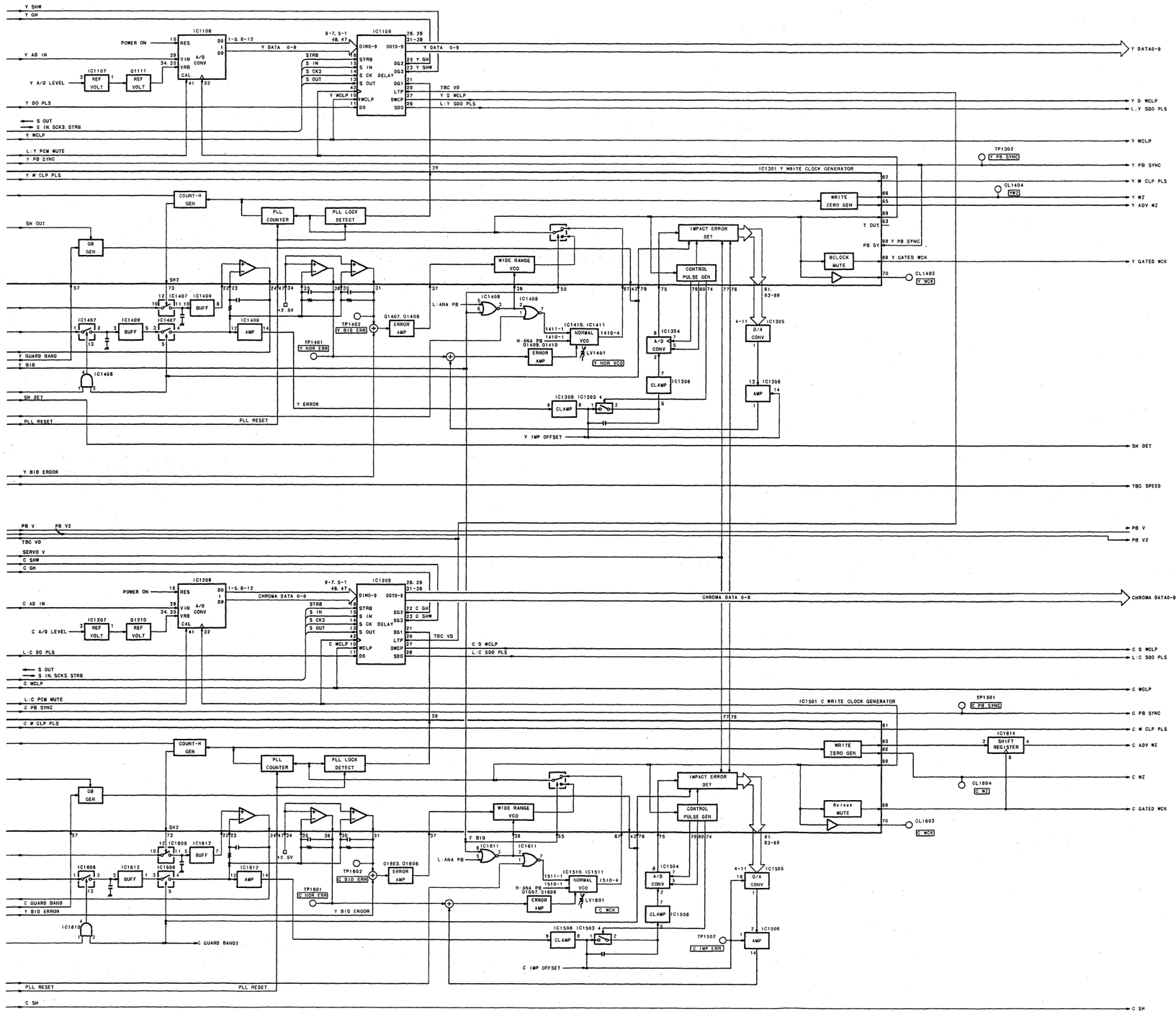

Analog BETACAM video PB (RF demodulator, TBC)

DM-123 (2/4)

DM-123: Lot No. 261- For HDW-M2000
For HDW-A2100, M2100
Lot No. 462- For HDW-S2000
Lot No. 434- For DVW-M2000
Lot No. 261- For MSW-A2000, M2000
For MSW-M2100
Lot No. 495- For MSW-M2000E, M2100E

DM-123P: Lot No. 261- For HDW-M2000P
For HDW-M2100P
Lot No. 462- For HDW-S2000P
Lot No. 434- For DVW-M2000P
Lot No. 261- For MSW-A2000P, M2000P
For MSW-M2100P
Lot No. 495- For MSW-M2000EP, M2100EP

3-55

DM-123 (3/4) HDW-M/S/A, DVW-M, MSW-A/M

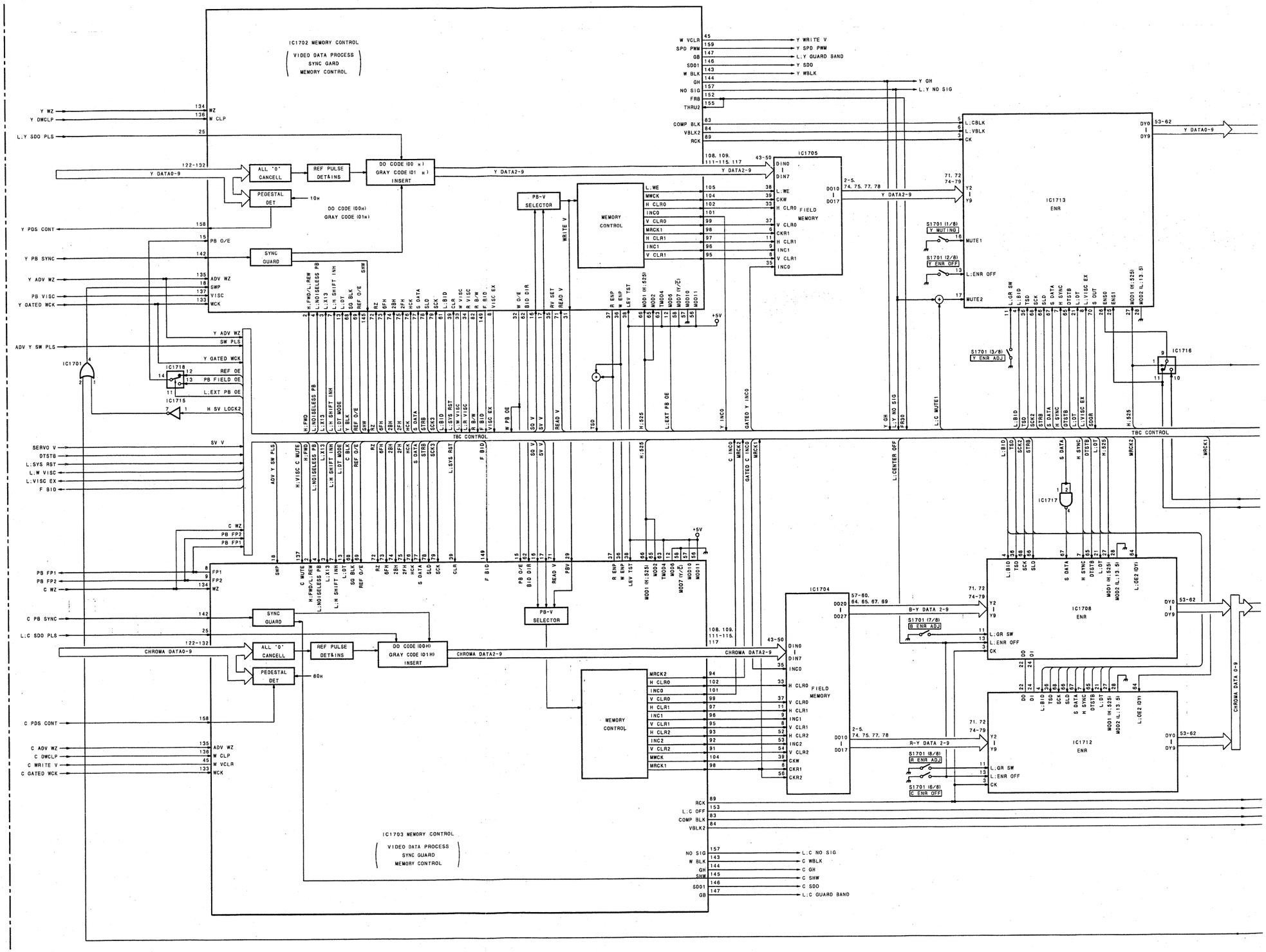

3-56

DM-123 (3/4) HDW-M/S/A, DVW-M, MSW-A/M

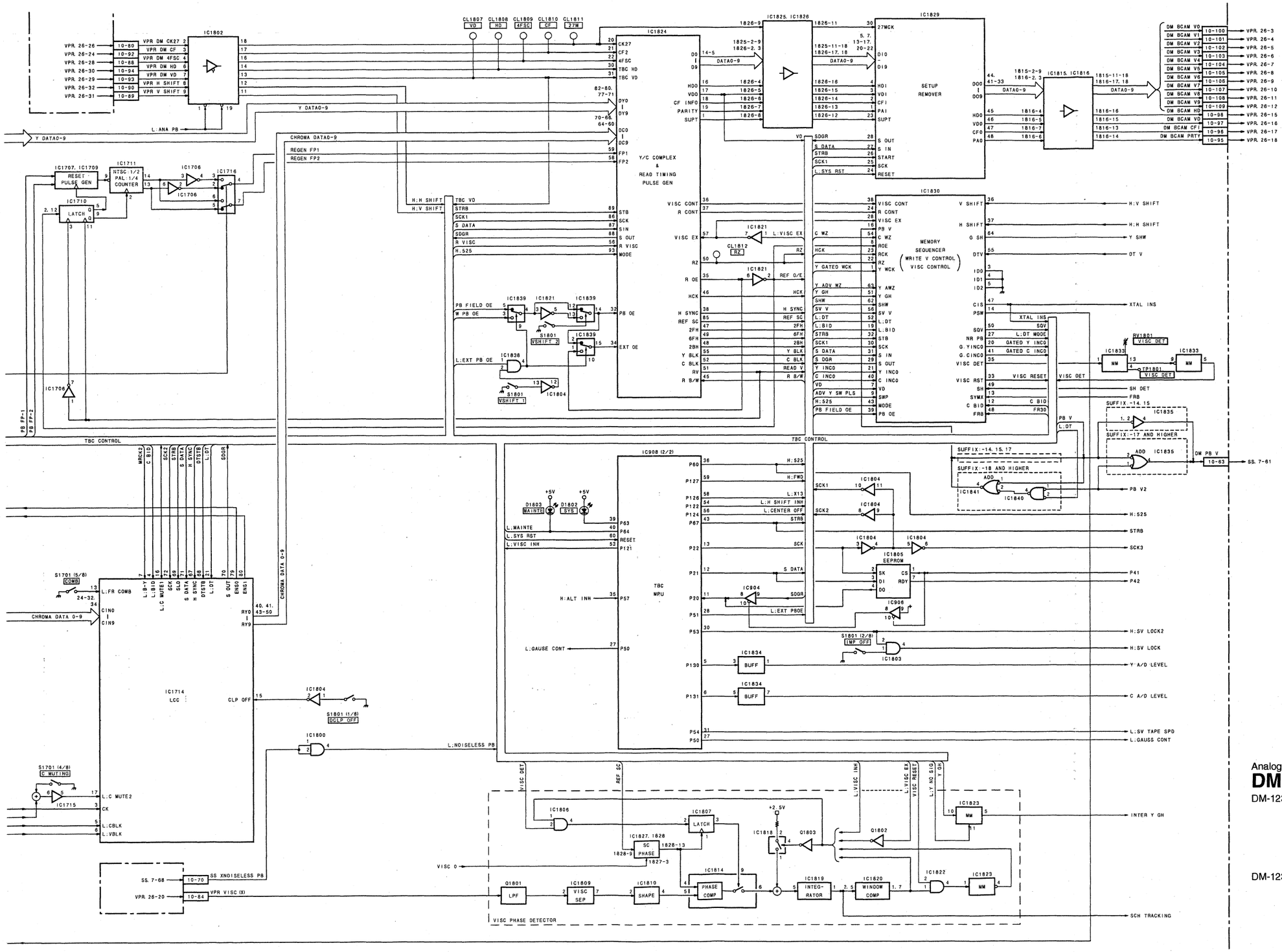

Analog BETACAM video PB (RF demodulator, TBC)

DM-123 (3/4)

DM-123: Lot No. 261- For HDW-M2000
For HDW-A2100, M2100
Lot No. 462- For HDW-S2000
Lot No. 434- For DVW-M2000
Lot No. 261- For MSW-A2000, M2000
For MSW-M2100
Lot No. 495- For MSW-M2000E, M210

DM-123P: Lot No. 261- For HDW-M2000P
For HDW-M2100P
Lot No. 462- For HDW-S2000P
Lot No. 434- For DVW-M2000P
Lot No. 261- For MSW-A2000P, M200
For MSW-M2100P
Lot No. 495- For MSW-M2000EP, M21

3-57

DM-123 (4/4) HDW-M/S/A, DVW-M, MSW-A/M

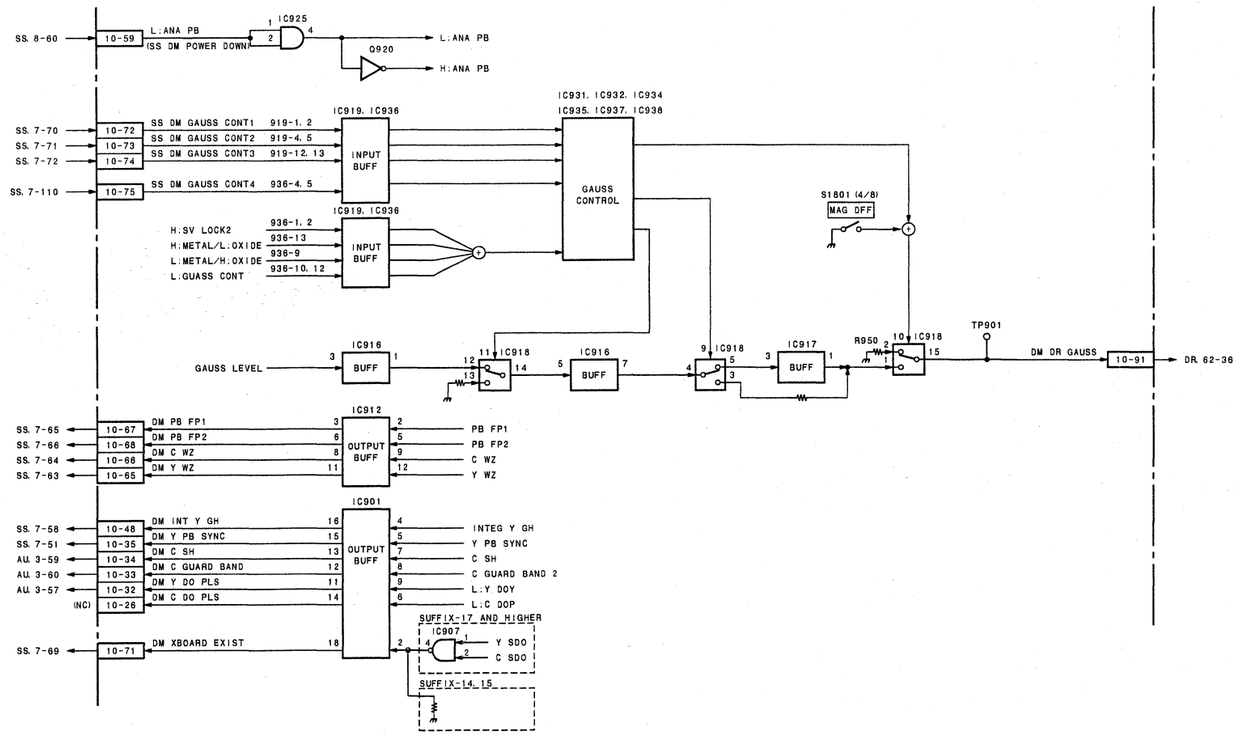

Analog BETACAM video PB (RF demodulator, TBC)

DM-123 (4/4)

DM-123:	Lot No. 261-	For HDW-M2000 For HDW-A2100, M2100
	Lot No. 462-	For HDW-S2000
	Lot No. 434-	For DVW-M2000
	Lot No. 261-	For MSW-A2000, M2000 For MSW-M2100
	Lot No. 495-	For MSW-M2000E, M2100E
DM-123P:	Lot No. 261-	For HDW-M2000P For HDW-M2100P
	Lot No. 462-	For HDW-S2000P
	Lot No. 434-	For DVW-M2000P
	Lot No. 261-	For MSW-A2000P, M2000P For MSW-M2100P
	Lot No. 495-	For MSW-M2000EP, M2100EP

3-59

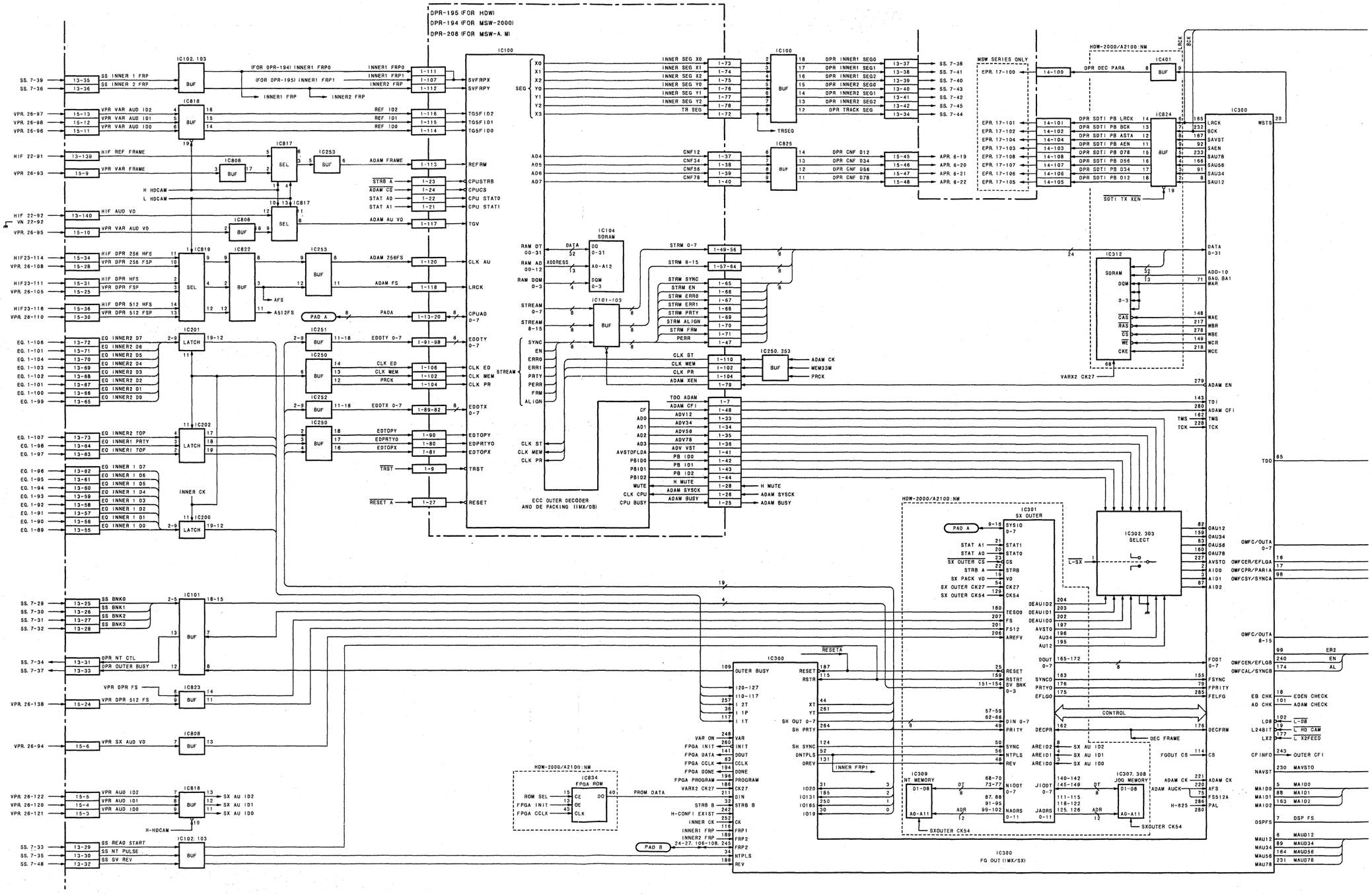
DPR-195 (FOR HDW)
DPR-194 (FOR MSW-2000)
DPR-208 (FOR MSW-A, M)
IC100
IC102, 103
IC818
IC817
IC253
IC808
IC819
IC822
IC201
IC202
IC200
IC251
IC250
IC252
IC101
IC823
IC104 SDRAM
IC101-103
IC250, 253
IC834 FPGA ROM
ECC OUTER DECODER AND DE PACKING (IMX/DB)
IC300
FG OUT (IMX/SX)
IC100
IC825
IC824
IC401
IC300
IC312
HDW-2000/A2100-NM
MSW SERIES ONLY
IC301 SX OUTER
IC302, 303 SELECT
IC309 NT MEMORY
IC307, 308 JOG MEMORY
SS. 7-39
SS. 7-36
VPR. 26-97
VPR. 26-98
VPR. 26-96
HIF 22-91
VPR 26-93
HIF 22-92
VN 22-92
VPR. 26-95
HIF23-114
VPR. 26-108
HIF23-111
VPR. 26-105
HIF23-116
VPR. 26-110
EQ. 1-106
EQ. 1-101
EQ. 1-104
EQ. 1-103
EQ. 1-102
EQ. 1-101
EQ. 1-100
EQ. 1-99
EQ. 1-107
EQ. 1-98
EQ. 1-97
EQ. 1-96
EQ. 1-95
EQ. 1-94
EQ. 1-93
EQ. 1-92
EQ. 1-91
EQ. 1-90
EQ. 1-89
SS. 7-29
SS. 7-30
SS. 7-31
SS. 7-32
SS. 7-34
SS. 7-37
VPR. 26-138
VPR. 26-94
VPR. 26-122
VPR. 26-120
VPR. 26-121
SS. 7-33
SS. 7-35
SS. 7-48
SS INNER 1 FRP
SS INNER 2 FRP
VPR VAR AUD ID2
VPR VAR AUD ID1
VPR VAR AUD ID0
HIF REF FRAME
VPR VAR FRAME
H HDCAM
L HDCAM
HIF AUD VD
VPR VAR AUD VD
HIF DPR 256 HFS
VPR DPR 256 FSP
HIF DPR HFS
VPR DPR FSP
HIF DPR 512 HFS
VPR DPR 512 FSP
EQ INNER2 D7
EQ INNER2 D6
EQ INNER2 D5
EQ INNER2 D4
EQ INNER2 D3
EQ INNER2 D2
EQ INNER2 D1
EQ INNER2 D0
EQ INNER2 TOP
EQ INNER1 PRTY
EQ INNER1 TOP
EQ INNER 1 D7
EQ INNER 1 D6
EQ INNER 1 D5
EQ INNER 1 D4
EQ INNER 1 D3
EQ INNER 1 D2
EQ INNER 1 D1
EQ INNER 1 D0
INNER CK
SS BNK0
SS BNK1
SS BNK2
SS BNK3
DPR NT CTL
DPR OUTER BUSY
VPR DPR FS
VPR DPR 512 FS
VPR SX AUD VD
VPR AUD ID2
VPR AUD ID1
VPR AUD ID0
H-HDCAM
SS READ START
SS NT PULSE
SS SV REV
(FOR DPR-194) INNER1 FRP0
(FOR DPR-195) INNER1 FRP1
INNER1 FRP
INNER2 FRP
REF ID2
REF ID1
REF ID0
ADAM FRAME
STRB A
ADAM CS
STAT A0
STAT A1
ADAM AU VD
ADAM 256FS
ADAM FS
AFS
A512FS
PADA
EDDTY 0-7
CLK ED
CLK MEM
PRCK
EDDTX 0-7
EDTOPY
EDPRTYO
EDTOPX
TRST
RESET A
SVFRPX
SVFRPY
TG5FID2
TG5FID1
TG5FID0
REFRM
CPUSTRB
CPUCS
CPU STAT0
CPU STAT1
TGV
CLK AU
LRCK
CPUAD 0-7
EDDTY 0-7
CLK ED
CLK MEM
CLK PR
EDDTX 0-7
EDTOPY
EDPRTYO
EDTOPX
TRST
RESET
SEG
INNER SEG X0
INNER SEG X1
INNER SEG X2
INNER SEG Y0
INNER SEG Y1
INNER SEG Y2
TR SEG
TRSEQ
CNF12
CNF34
CNF56
CNF78
DPR INNER1 SEG0
DPR INNER1 SEG1
DPR INNER1 SEG2
DPR INNER2 SEG0
DPR INNER2 SEG1
DPR INNER2 SEG2
DPR TRACK SEG
DPR CNF D12
DPR CNF 034
DPR CNF 056
DPR CNF D78
SS. 7-38
SS. 7-41
SS. 7-40
SS. 7-43
SS. 7-42
SS. 7-45
SS. 7-44
APR. 6-19
APR. 6-20
APR. 6-21
APR. 6-22
EPR. 17-100
EPR. 17-101
EPR. 17-102
EPR. 17-104
EPR. 17-103
EPR. 17-108
EPR. 17-107
EPR. 17-106
EPR. 17-105
DPR DEC PARA
DPR SDTI PB LRCK
DPR SDTI PB BCK
DPR SDTI PB ASTA
DPR SDTI PB AEN
DPR SDTI PB D78
DPR SDTI PB D56
DPR SDTI PB D34
DPR SDTI PB D12
SDTI TX XEN
LRCK
BCK
WSTS
SAVST
SAEN
SAU78
SAU56
SAU34
SAU12
RAM DT 00-31
RAM AD 00-12
RAM DQM 0-3
STREAM 0-7
STREAM 8-15
SYNC
EN
ERR0
ERR1
PRTY
PERR
FRM
ALIGN
DATA 0-31
ADDRESS
DQM 0-3
STRM 0-7
STRM 8-15
STRM SYNC
STRM EN
STRM ERR0
STRM ERR1
STRM PRTY
STRM ALIGN
STRM FRM
PERR
CLK ST
CLK MEM
CLK PR
ADAM XEN
ADAM CK
MEM33M
PRCK
TDO ADAM
ADAM CFI
CF
ADD
AD1
AD2
AD3
AVSTOFLDA
PBID0
PBID1
PBID2
MUTE
CLK CPU
CPU BUSY
ADV12
ADV34
ADV56
ADV78
ADV VST
PB ID0
PB ID1
PB ID2
H MUTE
ADAM SYSCK
ADAM BUSY
H MUTE
ADAM SYSCK
ADAM BUSY
ADAM EN
TDI
ADAM CFI
TMS
TCK
TDO
OMFC/OUTA 0-7
OMFC/OUTA 8-15
OMFCEN/EFLGB
OMFCAL/SYNCB
OMFCER/EFLGA
OMFCPR/PARIA
OMFCSY/SYNCA
EB CHK
AD CHK
LDB
L24BIT
LX2
CFINFO
NAVST
MAID0
MAID1
MAID2
DSPFS
MAUD12
MAUD34
MAUD56
MAUD78
ER2
EN
AL
EDEN CHECK
ADAM CHECK
L-08
L_HD CAM
L_X2FEED
OUTER CF!
MAVSTO
MA!D0
MA!D1
MA!D2
DSP FS
RESETA
OUTER BUSY
I20-127
I10-117
I 2T
I 1P
I 1T
VAR ON
FPGA INIT
FPGA DATA
FPGA CCLK
FPGA DONE
FPGA PROGRAM
VARX2 CK27
PROM DATA
STRB B
H-CONFI EXIST
INNER CK
INNER1 FRP
INNER2 FRP
24-27, 106-108, 245
NTPLS
REV
RESET
RSTR
XT
YT
SH OUT 0-7
SH PRTY
SH SYNC
ONTPLS
DREV
I020
I013I
I018S
I019
INNER FRP!
SYSIO 0-7
STAT A1
STAT A0
SX OUTER CS
STRB A
SX PACK VD
SX OUTER CK27
SX OUTER CK54
TESOO
FS
F512
AREFV
RSTRT
SV BNK 0-3
SYNCO
PRTYO
EFLGO
DIN 0-7
PRITY
DECPR
SYNC
NTPLS
REV
AREID2
AREID1
AREID0
SX AU ID2
SX AU ID1
SX AU ID0
DEAUID2
DEAUID1
DEAUID0
AVST0
AU34
AU12
DOUT 0-7
FSYNC
FPRITY
FELFG
DECFRM
FGOUT CS
CS
CONTROL
DEC FRAME
L-SX
SDRAM
DQM
CAS
RAS
CS
WE
CKE
WAE
WBR
WBE
WCR
WCE
ADD-10
BA0, BA1
WAR
VARX2 CK27
SXOUTER CK54
NT MEMORY
JOG MEMORY
NIODT 0-7
JIODT 0-7
NAORS 0-11
JAORS 0-11
ADR
ADAM AUCK
AFS
FS512A
PAL
H-625
PAD A
PAD B
ROM SEL
FPGA INIT
FPGA CCLK
DO
OE
CLK
CE

DPR-155 (1/2) HDW-2000/M/A, MSW

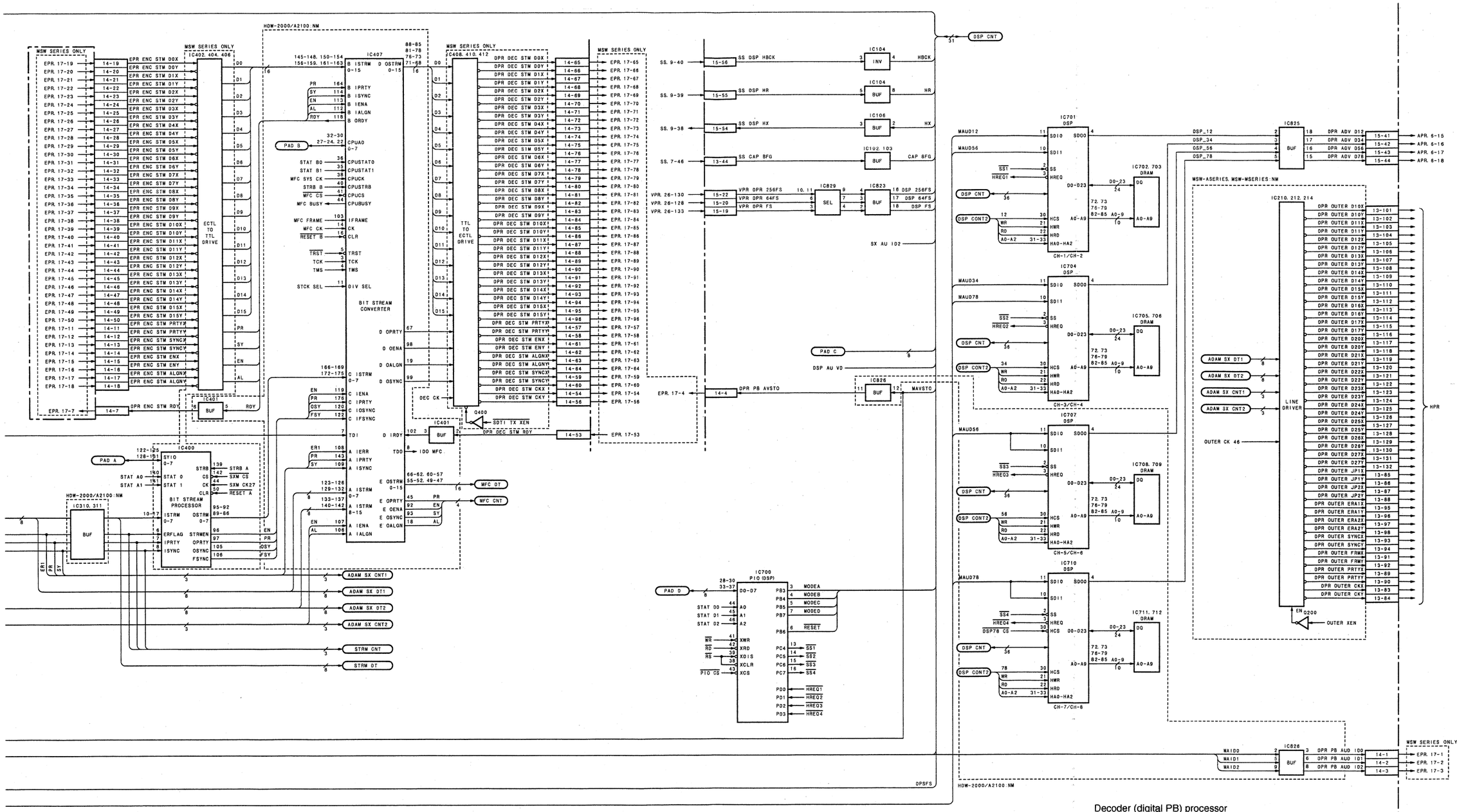

Decoder (digital PB) processor
(ECC outer decoder, Bit reduction decoder, Audio jog DSP)

DPR-155 (1/2)

BOARD NO. 1-677-279-13, 14
- DPR-155C: Lot No. 261-554 For MSW-2000

BOARD NO. 1-677-279-13
- DPR-155H: Lot No. 261-351 For HDW-2000, A2100
- DPR-155HM: Lot No. 261-351 For HDW-M2000/P, M2100/P
- DPR-155: Lot No. 261-351 For MSW-A2000/P
- DPR-155M: Lot No. 261-351 For MSW-M2000/P, M2100/P

3-61

DPR-155 (2/2) HDW-2000/M/A, MSW

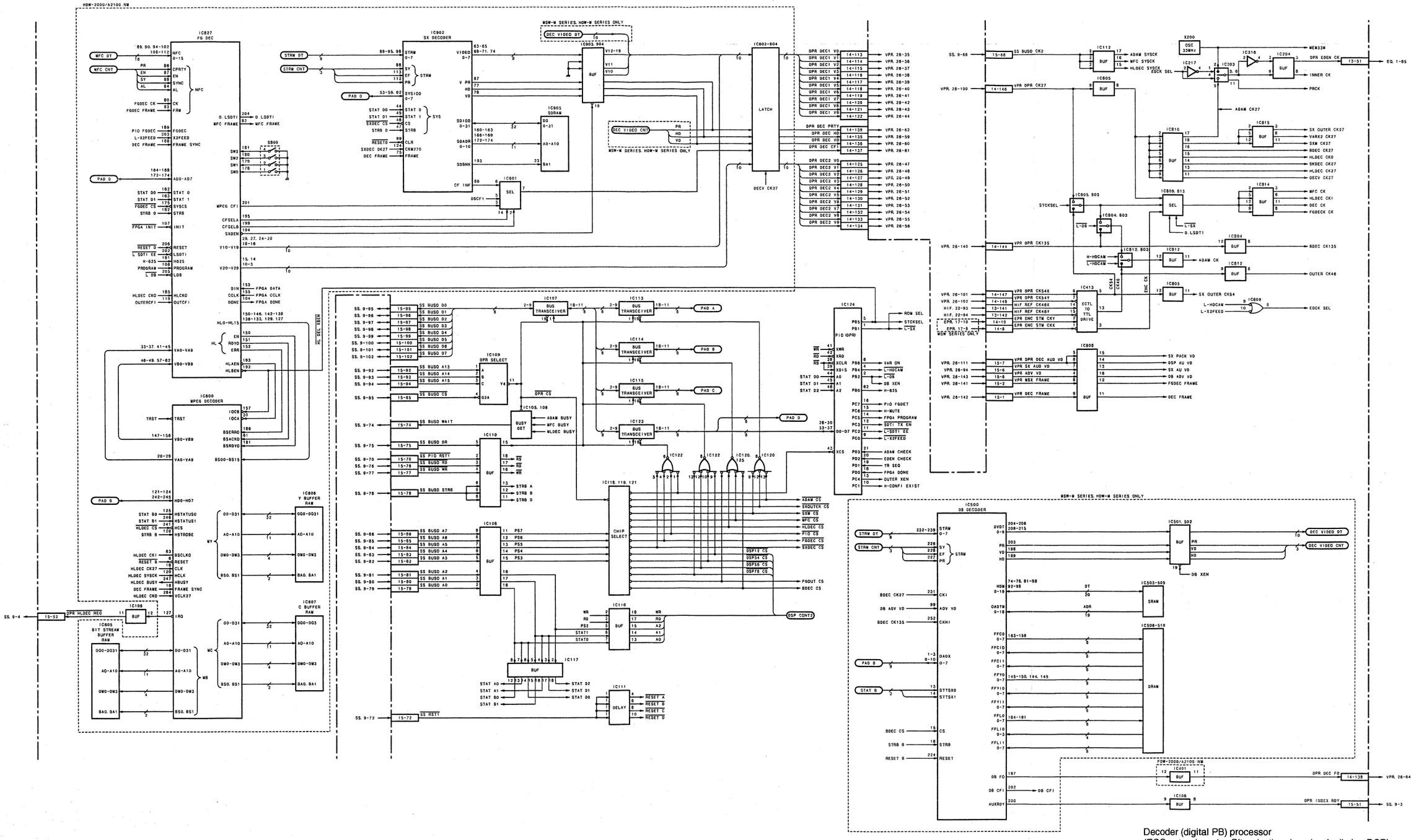

Decoder (digital PB) processor
(ECC outer decoder, Bit reduction decoder, Audio jog DSP)

DPR-155 (2/2)

BOARD NO. 1-677-279-13, 14
DPR-155C: Lot No. 261-554 For MSW-2000
BOARD NO. 1-677-279-13
DPR-155H: Lot No. 261-351 For HDW-2000, A2100
DPR-155HM: Lot No. 261-351 For HDW-M2000/P, M2100/P
DPR-155: Lot No. 261-351 For MSW-A2000/P
DPR-155M: Lot No. 261-351 For MSW-M2000/P, M2100/P

DPR-229 (1/2) HDW, DVW, MSW SUFFIX: -14

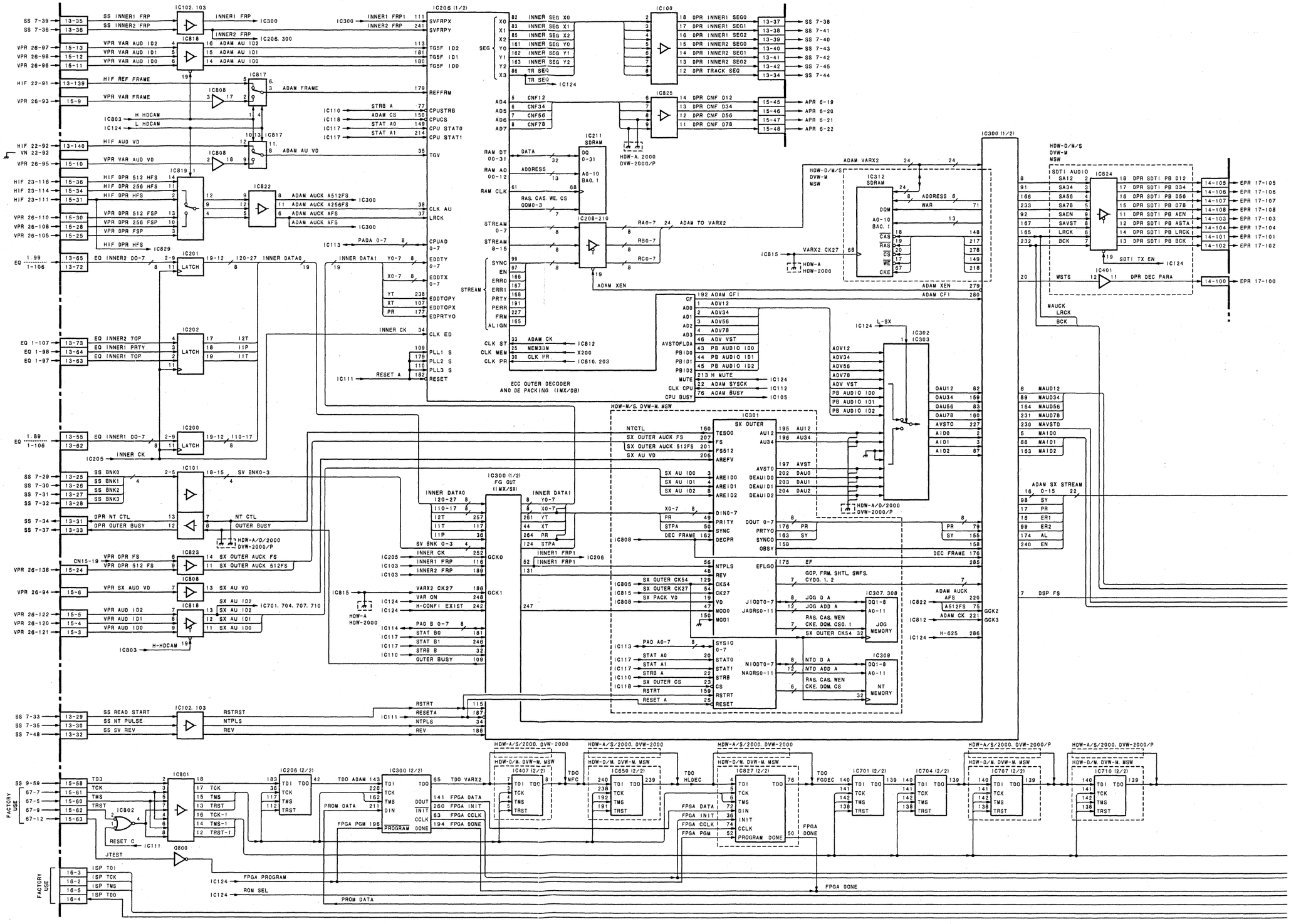

3-64 (b)

DPR-229 (1/2) HDW, DVW, MSW SUFFIX: -14

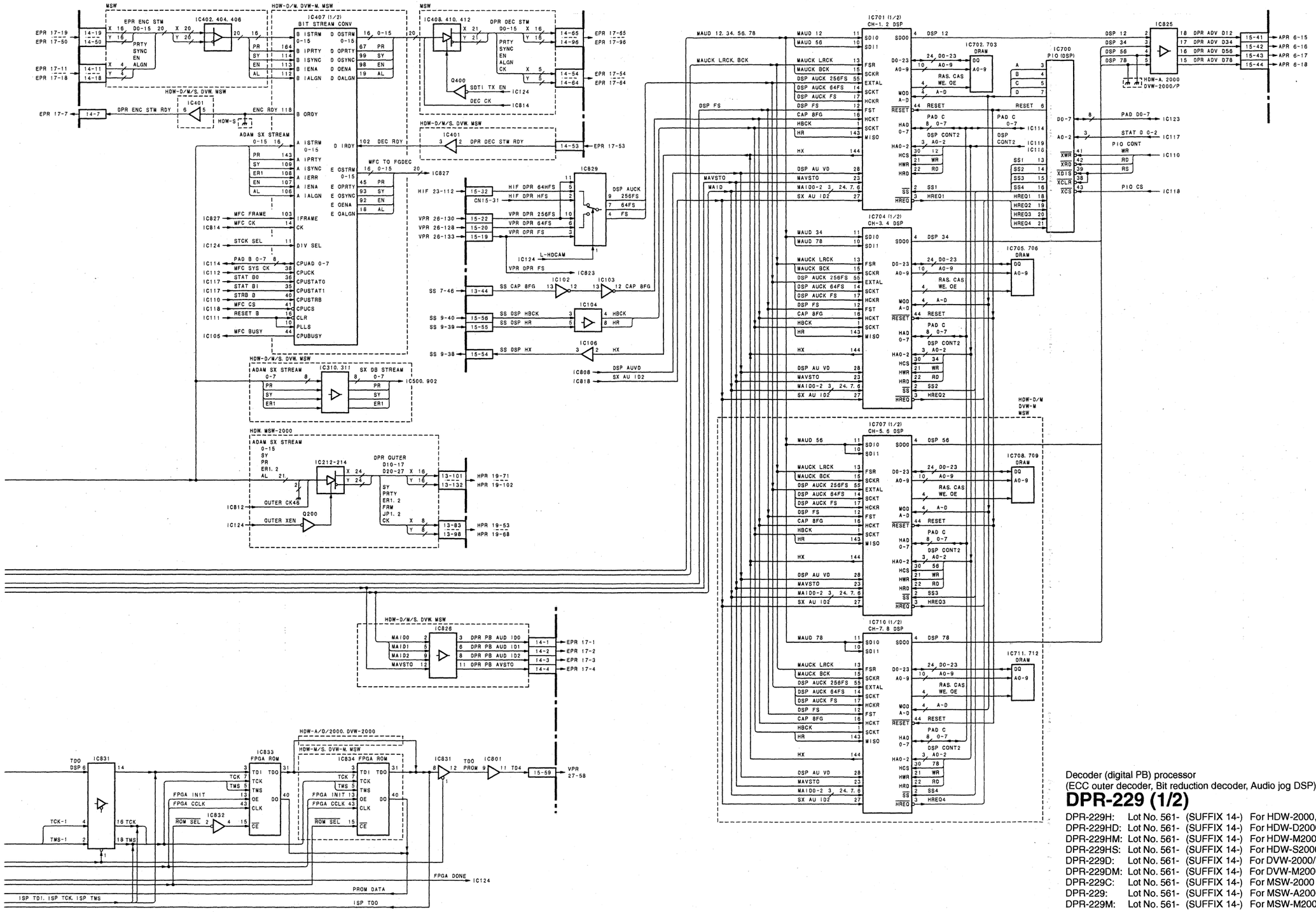

HDW series, DVW series, MSW series

3-65 (b)

Decoder (digital PB) processor
(ECC outer decoder, Bit reduction decoder, Audio jog DSP)

DPR-229 (1/2)

DPR-229H: Lot No. 561- (SUFFIX 14-) For HDW-2000, A2100
DPR-229HD: Lot No. 561- (SUFFIX 14-) For HDW-D2000
DPR-229HM: Lot No. 561- (SUFFIX 14-) For HDW-M2000/P, M2100/P
DPR-229HS: Lot No. 561- (SUFFIX 14-) For HDW-S2000/P
DPR-229D: Lot No. 561- (SUFFIX 14-) For DVW-2000/P
DPR-229DM: Lot No. 561- (SUFFIX 14-) For DVW-M2000/P
DPR-229C: Lot No. 561- (SUFFIX 14-) For MSW-2000
DPR-229: Lot No. 561- (SUFFIX 14-) For MSW-A2000/P
DPR-229M: Lot No. 561- (SUFFIX 14-) For MSW-M2000/P, M2000E/P, M2100/P, M2

DPR-229 (2/2) HDW, DVW, MSW
SUFFIX: -14

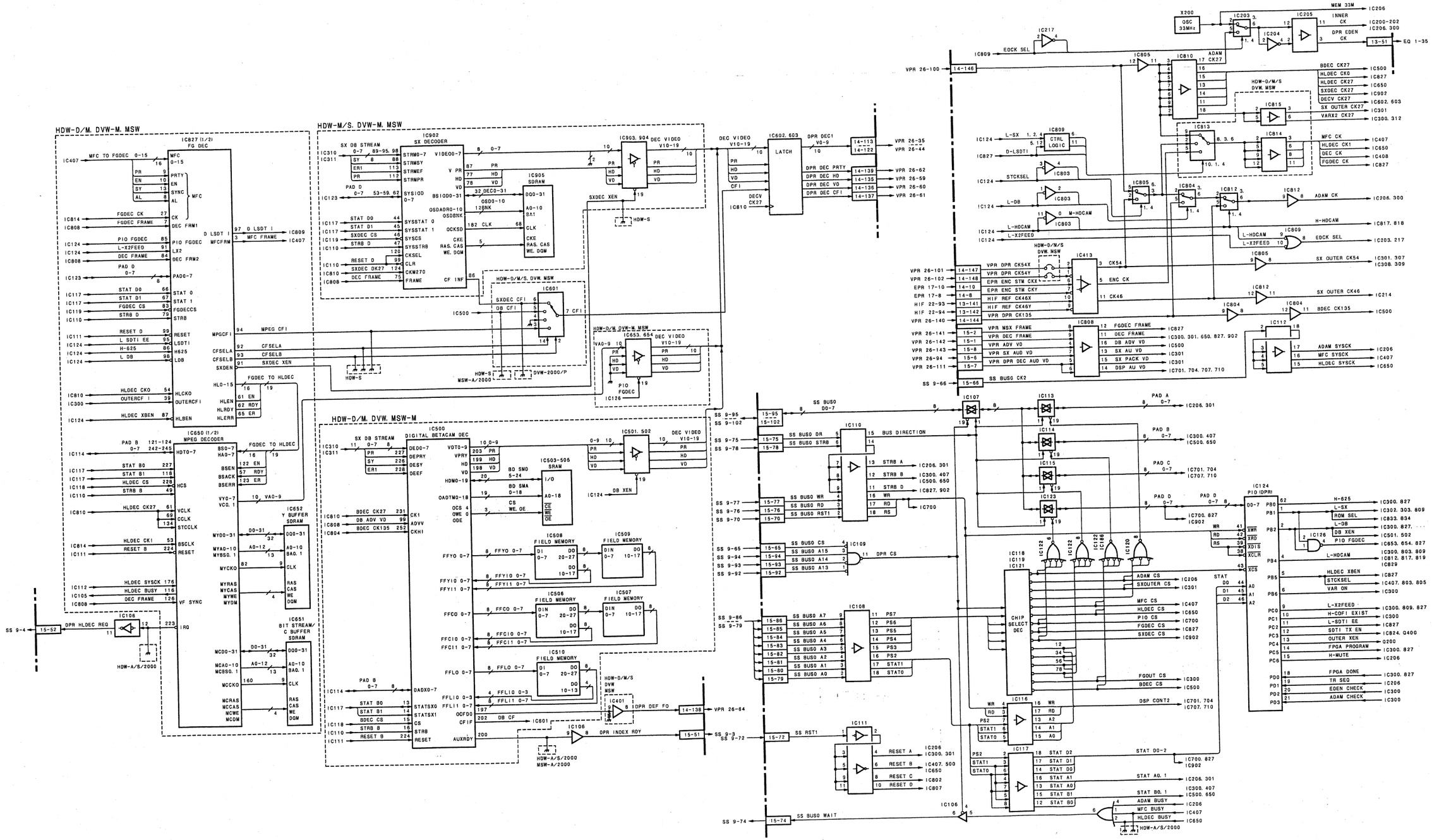

Decoder (digital PB) processor
(ECC outer decoder, Bit reduction decoder, Audio jog DSP)

DPR-229 (2/2)

DPR-229H: Lot No. 561- (SUFFIX 14-) For HDW-2000, A2100
DPR-229HD: Lot No. 561- (SUFFIX 14-) For HDW-D2000
DPR-229HM: Lot No. 561- (SUFFIX 14-) For HDW-M2000/P, M2100/P
DPR-229HS: Lot No. 561- (SUFFIX 14-) For HDW-S2000/P
DPR-229D: Lot No. 561- (SUFFIX 14-) For DVW-2000/P
DPR-229DM: Lot No. 561- (SUFFIX 14-) For DVW-M2000/P
DPR-229C: Lot No. 561- (SUFFIX 14-) For MSW-2000
DPR-229: Lot No. 561- (SUFFIX 14-) For MSW-A2000/P
DPR-229M: Lot No. 561- (SUFFIX 14-) For MSW-M2000/P, M2000E/P, M2100/P, M2100E/P

3-67 (b)

DPR-229 (1/2) HDW, DVW, MSW-A/M
SUFFIX: -11, 12, 13

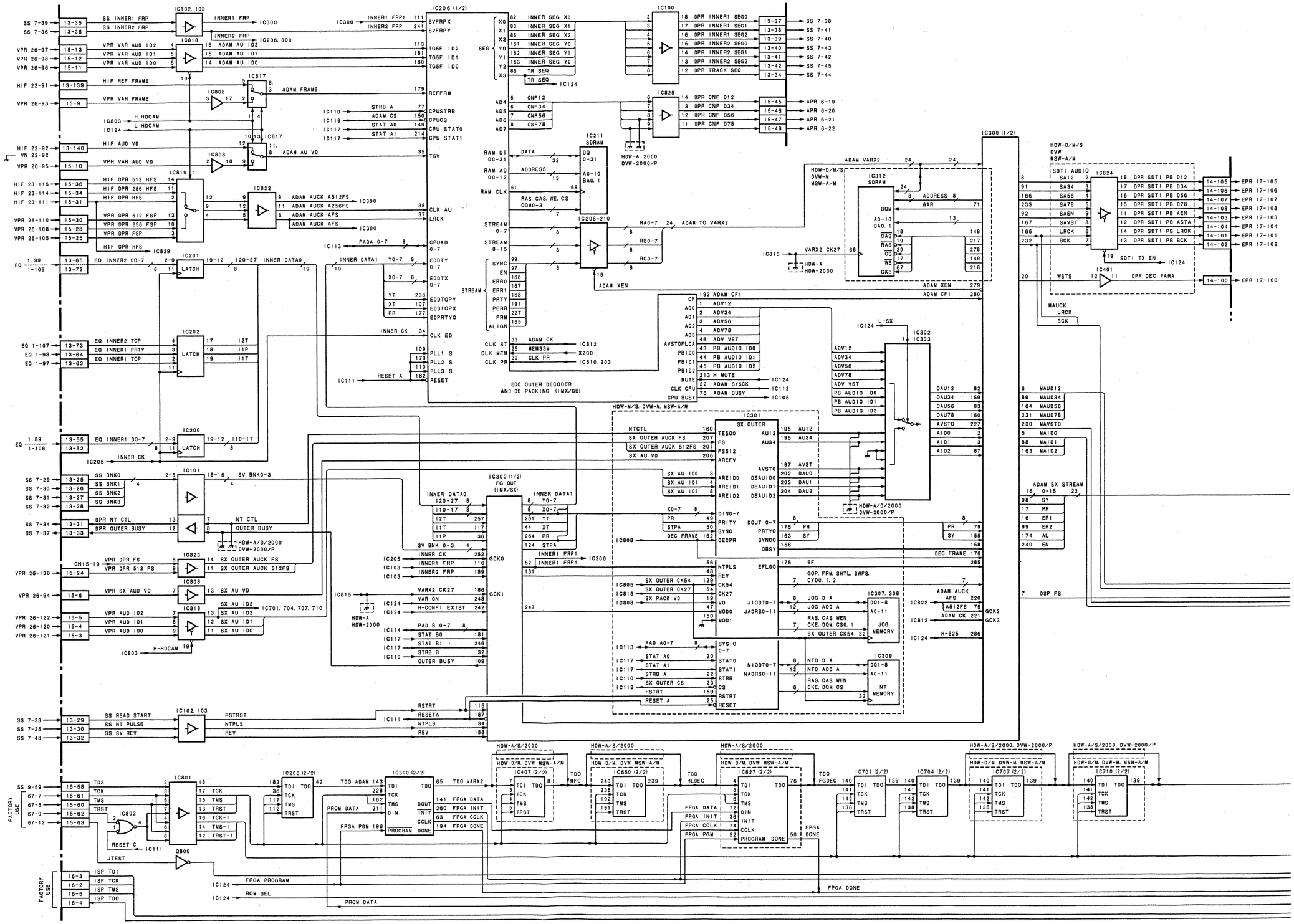

DPR-229 (1/2) HDW, DVW, MSW-A/M
SUFFIX: -11, 12, 13

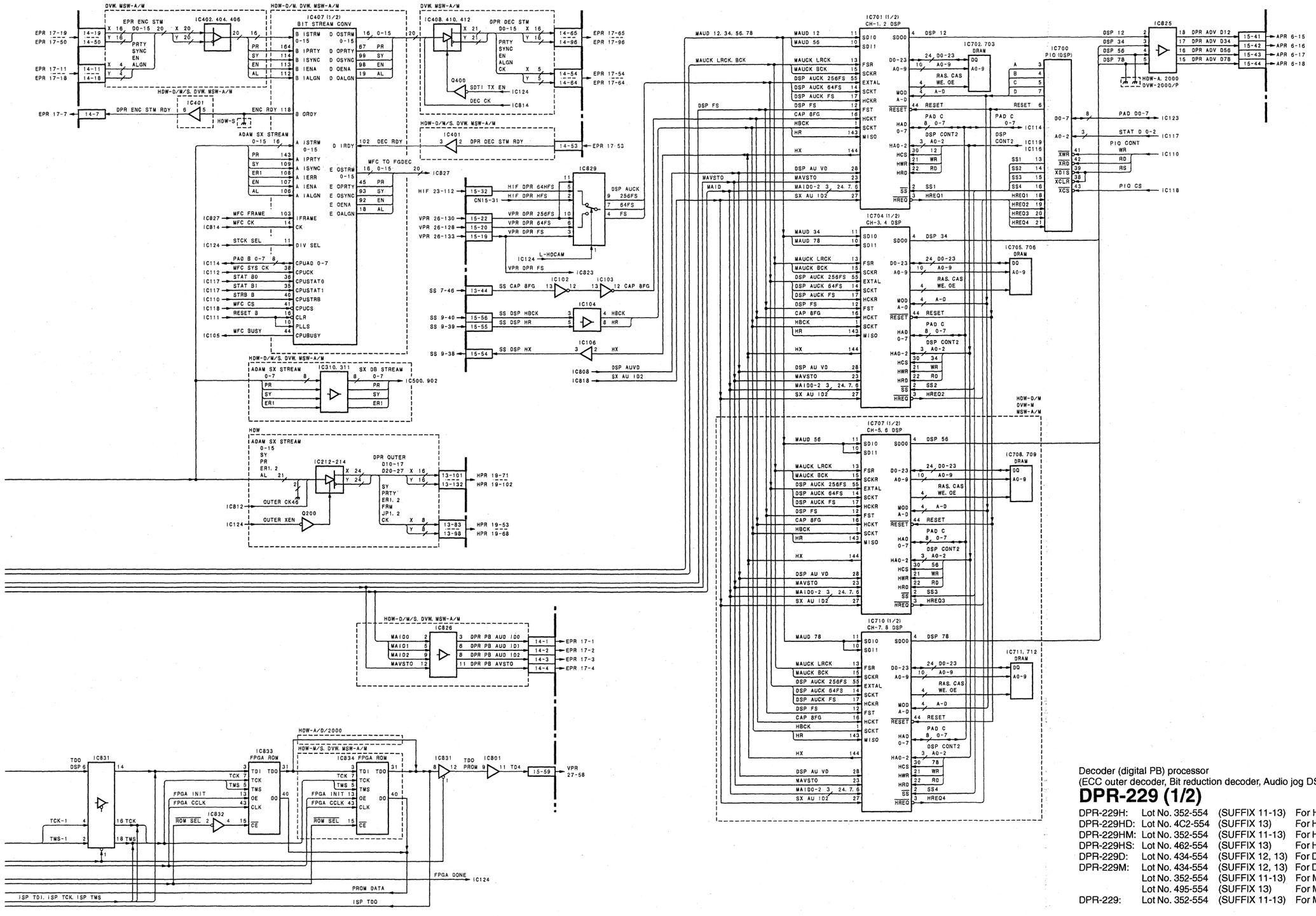

Decoder (digital PB) processor
(ECC outer decoder, Bit reduction decoder, Audio jog DSP)

DPR-229 (1/2)

DPR-229H:	Lot No. 352-554	(SUFFIX 11-13)	For HDW-2000, A2100
DPR-229HD:	Lot No. 4C2-554	(SUFFIX 13)	For HDW-D2000
DPR-229HM:	Lot No. 352-554	(SUFFIX 11-13)	For HDW-M2000/P, M2100/P
DPR-229HS:	Lot No. 462-554	(SUFFIX 13)	For HDW-S2000/P
DPR-229D:	Lot No. 434-554	(SUFFIX 12, 13)	For DVW-2000/P
DPR-229M:	Lot No. 434-554	(SUFFIX 12, 13)	For DVW-M2000/P
	Lot No. 352-554	(SUFFIX 11-13)	For MSW-M2000/P, M2100/P
	Lot No. 495-554	(SUFFIX 13)	For MSW-M2000E/P, M2100E/P
DPR-229:	Lot No. 352-554	(SUFFIX 11-13)	For MSW-A2000/P

DPR-229 (2/2) HDW, DVW, MSW-A/M
SUFFIX: -11, 12, 13

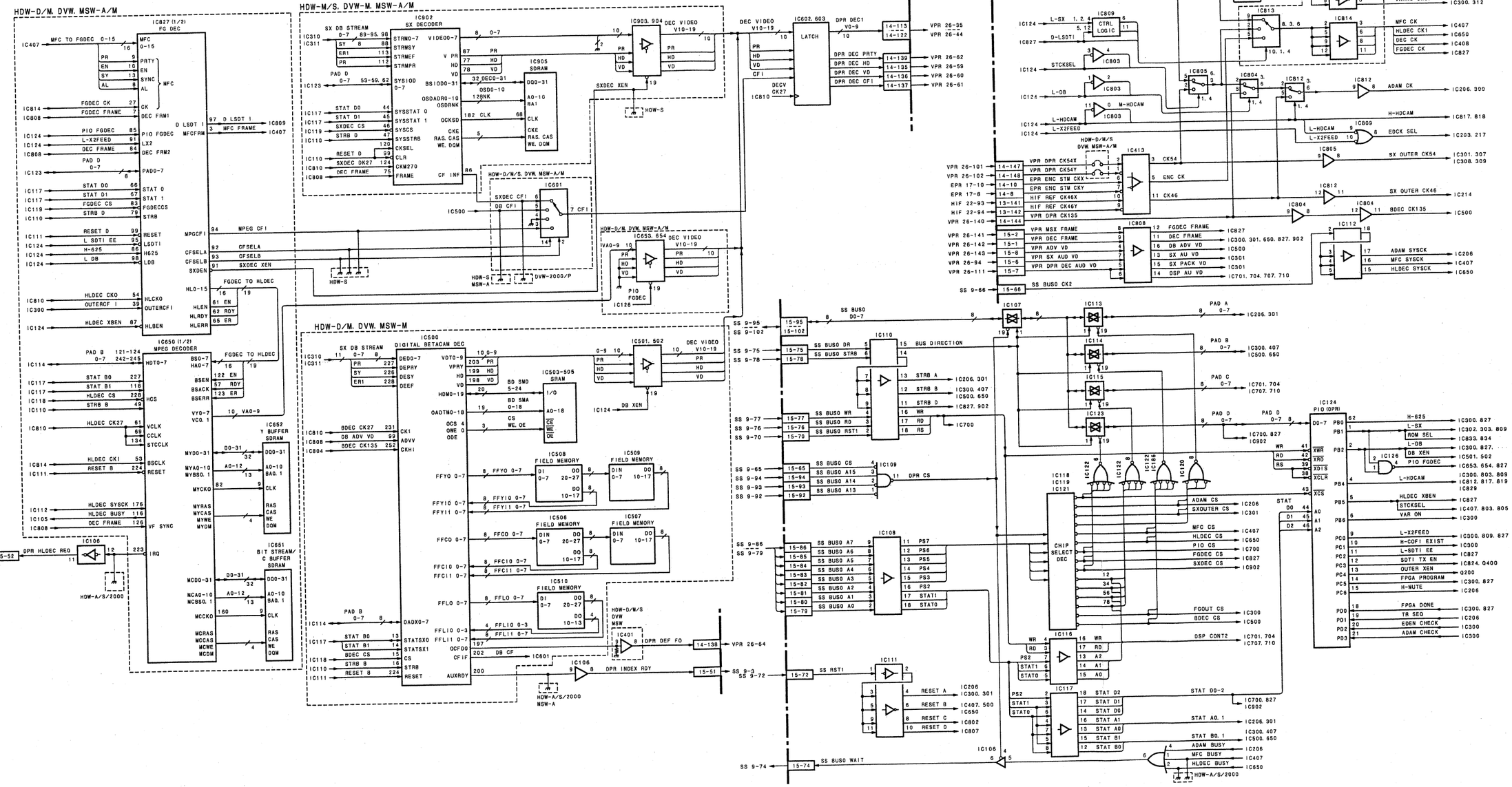

Decoder (digital PB) processor
(ECC outer decoder, Bit reduction decoder, Audio jog DSP)

DPR-229 (2/2)

DPR-229H:	Lot No. 352-554	(SUFFIX 11-13)	For HDW-2000, A2100
DPR-229HD:	Lot No. 4C2-554	(SUFFIX 13)	For HDW-D2000
DPR-229HM:	Lot No. 352-554	(SUFFIX 11-13)	For HDW-M2000/P, M2100/P
DPR-229HS:	Lot No. 462-554	(SUFFIX 13)	For HDW-S2000/P
DPR-229D:	Lot No. 434-554	(SUFFIX 12, 13)	For DVW-2000/P
DPR-229M:	Lot No. 434-554	(SUFFIX 12, 13)	For DVW-M2000/P
	Lot No. 352-554	(SUFFIX 11-13)	For MSW-M2000/P, M2100/P
	Lot No. 495-554	(SUFFIX 13)	For MSW-M2000E/P, M2100E/P
DPR-229:	Lot No. 352-554	(SUFFIX 11-13)	For MSW-A2000/P

DR-414 HDW-2000/M/A, MSW
Lot No. 261-424

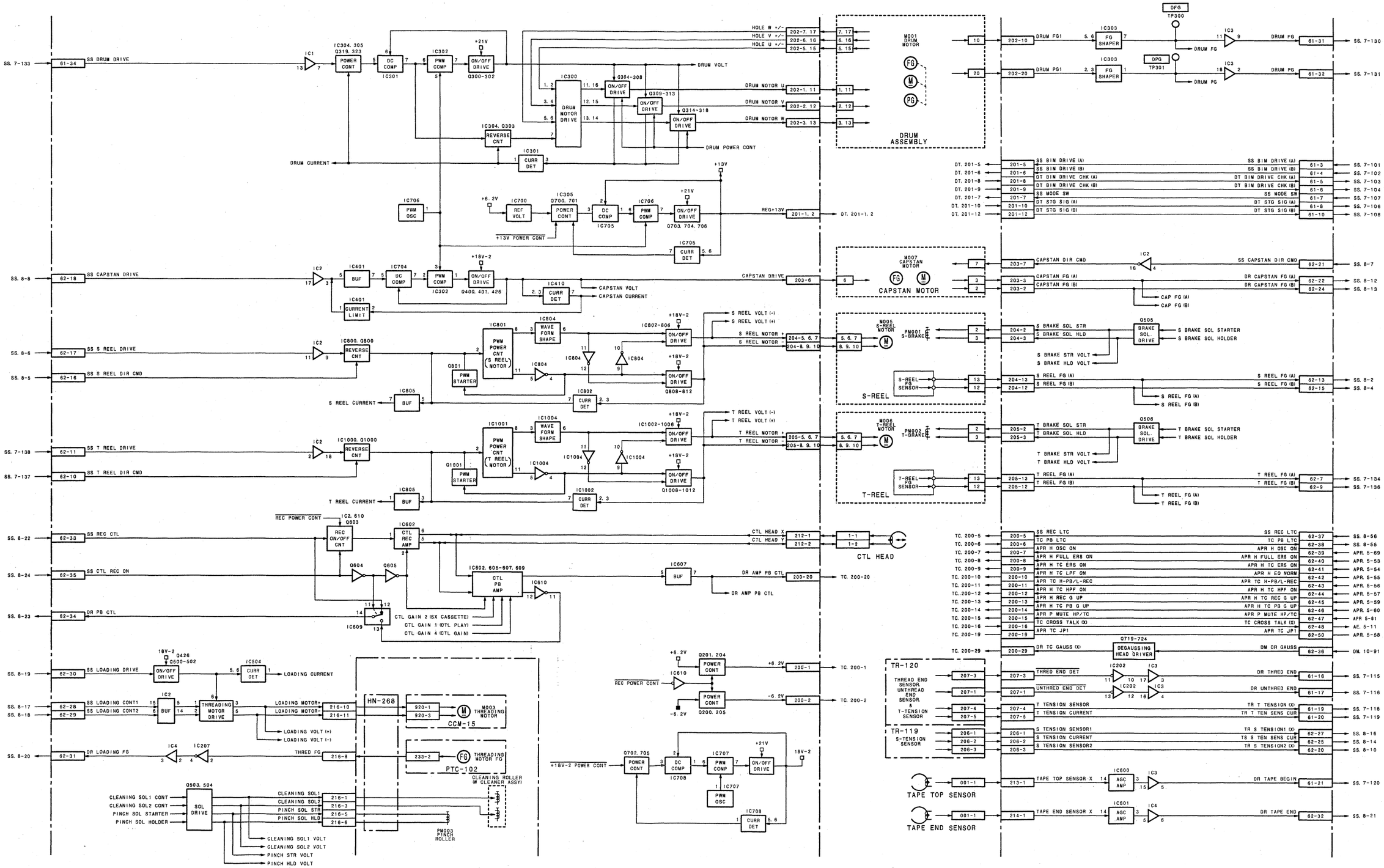

3-68

DR-414 HDW-2000/M/A, MSW Lot No. 261-424

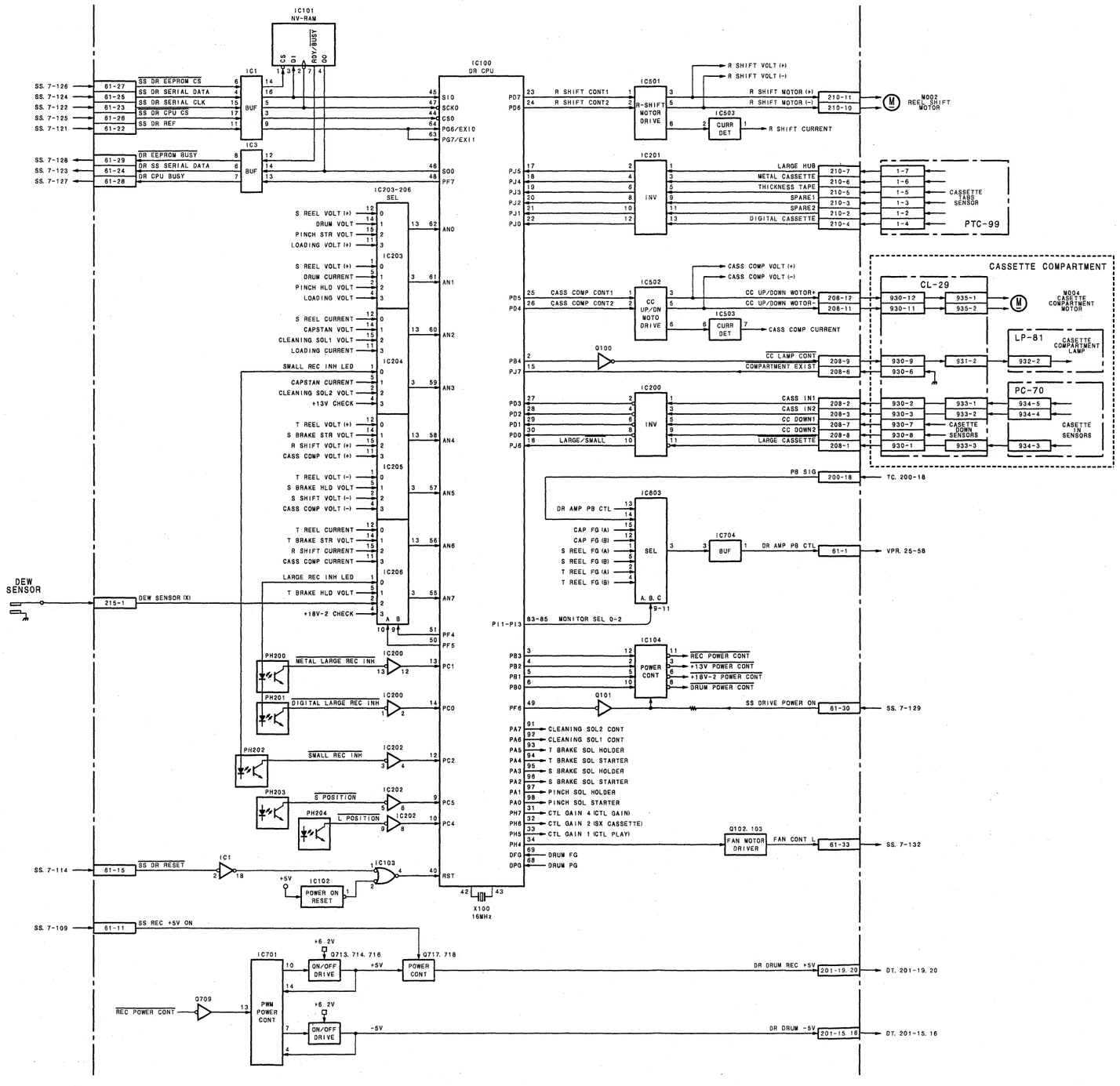

Solenoid drivers (Pinch, Brakes, Cleaning)
Motor drivers (Drum, Capstan, Reels, Threading, Reel shift, Cassette up/down)
REC inhibit sensors, Reel position sensors

DR-414

Lot No. 261-424 For HDW-2000, M2000/P, M2100/P, A2100
For MSW-2000, A2000/P, M2000/P, M2100/P

3-69

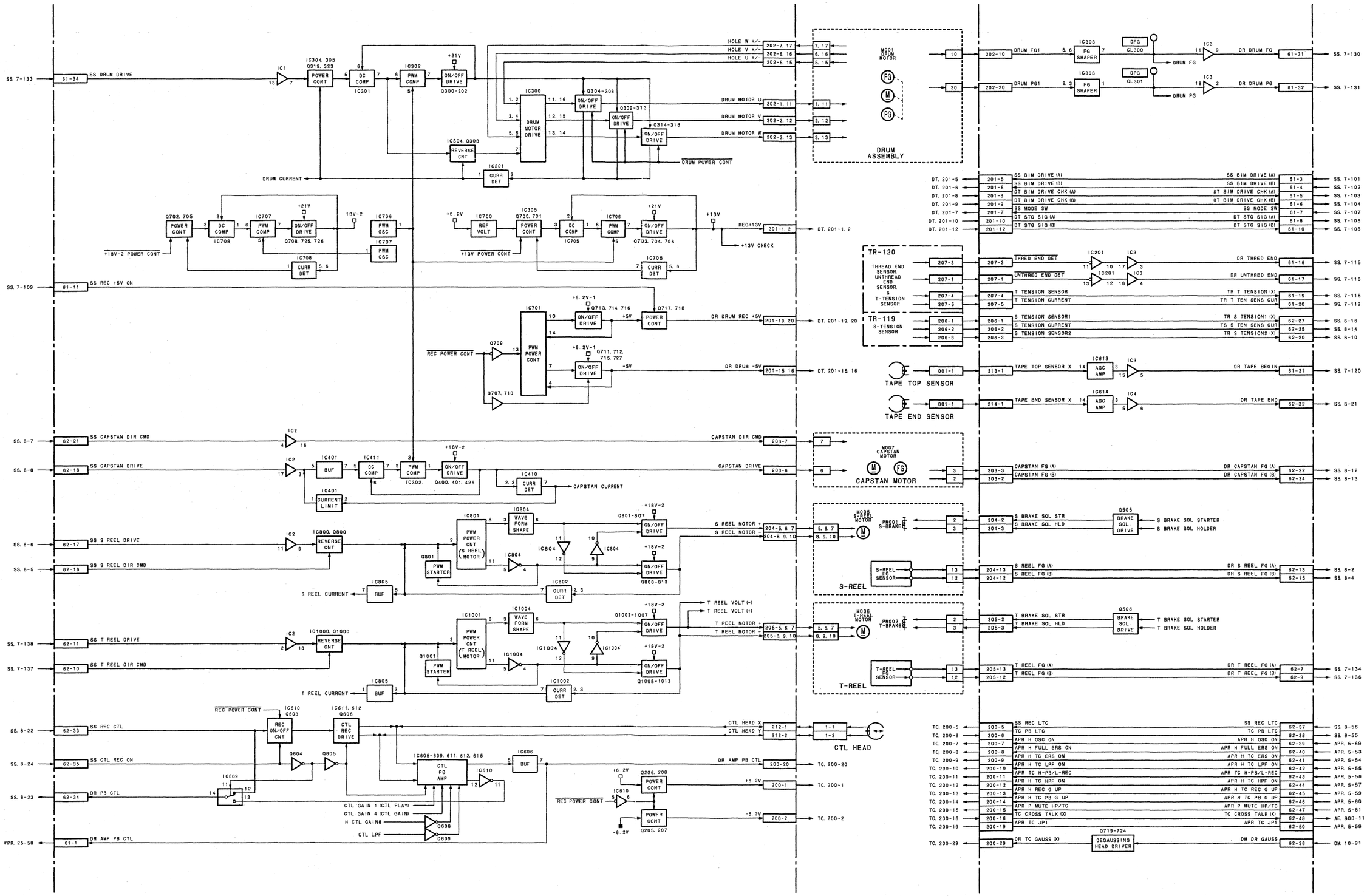
SS. 7-133
61-34
SS DRUM DRIVE
IC1
IC304. 305
Q319. 323
POWER CONT
DC COMP
IC301
IC302
PWM COMP
+21V
ON/OFF DRIVE
Q300-302
IC300
DRUM MOTOR DRIVE
Q304-308
Q309-313
Q314-318
IC304. Q303
REVERSE CNT
IC301
CURR DET
DRUM CURRENT
DRUM POWER CONT
HOLE W +/-
HOLE V +/-
HOLE U +/-
202-7. 17
202-6. 16
202-5. 15
DRUM MOTOR U
DRUM MOTOR V
DRUM MOTOR W
202-1. 11
202-2. 12
202-3. 13
M001 DRUM MOTOR
FG
M
PG
DRUM ASSEMBLY
10
20
202-10
202-20
DRUM FG1
DRUM PG1
IC303
FG SHAPER
DFG
DPG
CL300
CL301
DRUM FG
DRUM PG
DR DRUM FG
DR DRUM PG
61-31
61-32
SS. 7-130
SS. 7-131
DT. 201-5
DT. 201-6
DT. 201-8
DT. 201-9
DT. 201-7
DT. 201-10
DT. 201-12
201-5
201-6
201-8
201-9
201-7
201-10
201-12
SS BIM DRIVE (A)
SS BIM DRIVE (B)
DT BIM DRIVE CHK (A)
DT BIM DRIVE CHK (B)
SS MODE SW
DT STG SIG (A)
DT STG SIG (B)
61-3
61-4
61-5
61-6
61-7
61-8
61-10
SS. 7-101
SS. 7-102
SS. 7-103
SS. 7-104
SS. 7-107
SS. 7-106
SS. 7-108
Q702. 705
POWER CONT
DC COMP
IC708
IC707
PWM COMP
ON/OFF DRIVE
Q708. 725. 726
18V-2
+18V-2 POWER CONT
IC706
PWM OSC
IC707
IC708
CURR DET
+6. 2V
IC700
REF VOLT
IC305
Q700. 701
IC705
Q703. 704. 706
+13V
+13V POWER CONT
REG+13V
+13V CHECK
201-1. 2
DT. 201-1. 2
SS. 7-109
61-11
SS REC +5V ON
+6. 2V-1
Q713. 714. 716
Q717. 718
IC701
PWM POWER CONT
DR DRUM REC +5V
201-19. 20
DT. 201-19. 20
REC POWER CONT
Q709
Q707. 710
Q711. 712. 715. 727
DR DRUM -5V
201-15. 16
DT. 201-15. 16
TR-120
THREAD END SENSOR UNTHREAD END SENSOR & T-TENSION SENSOR
TR-119
S-TENSION SENSOR
207-3
207-1
207-4
207-5
206-1
206-2
206-3
THRED END DET
UNTHRED END DET
T TENSION SENSOR
T TENSION CURRENT
S TENSION SENSOR1
S TENSION CURRENT
S TENSION SENSOR2
IC201
DR THRED END
DR UNTHRED END
TR T TENSION (X)
TR T TEN SENS CUR
TR S TENSION1 (X)
TS S TEN SENS CUR
TR S TENSION2 (X)
61-16
61-17
61-19
61-20
62-27
62-25
62-20
SS. 7-115
SS. 7-116
SS. 7-118
SS. 7-119
SS. 8-16
SS. 8-14
SS. 8-10
001-1
TAPE TOP SENSOR
TAPE END SENSOR
213-1
214-1
IC613
IC614
AGC AMP
TAPE TOP SENSOR X
TAPE END SENSOR X
DR TAPE BEGIN
DR TAPE END
61-21
62-32
SS. 7-120
SS. 8-21
SS. 8-7
62-21
SS CAPSTAN DIR CMD
SS. 8-8
62-18
SS CAPSTAN DRIVE
IC2
IC401
BUF
CURRENT LIMIT
IC411
OC COMP
PWM COMP
IC302
+18V-2
ON/OFF DRIVE
Q400. 401. 426
IC410
CURR DET
CAPSTAN CURRENT
CAPSTAN DIR CMD
CAPSTAN DRIVE
203-7
203-6
M007 CAPSTAN MOTOR
CAPSTAN MOTOR
7
6
3
2
203-3
203-2
CAPSTAN FG (A)
CAPSTAN FG (B)
DR CAPSTAN FG (A)
DR CAPSTAN FG (B)
62-22
62-24
SS. 8-12
SS. 8-13
SS. 8-6
62-17
SS S REEL DRIVE
SS. 8-5
62-16
SS S REEL DIR CMD
IC800. Q800
REVERSE CNT
IC801
PWM POWER CNT (S REEL MOTOR)
IC804
WAVE FORM SHAPE
Q801-807
Q808-813
Q801
PWM STARTER
IC805
BUF
IC802
CURR DET
S REEL CURRENT
S REEL MOTOR +
S REEL MOTOR -
204-5. 6. 7
204-8. 9. 10
M005 S-REEL MOTOR
PM001 S-BRAKE
S-REEL
S-REEL FG SENSOR
2
3
13
12
204-2
204-3
204-13
204-12
S BRAKE SOL STR
S BRAKE SOL HLD
S REEL FG (A)
S REEL FG (B)
Q505
BRAKE SOL. DRIVE
S BRAKE SOL STARTER
S BRAKE SOL HOLDER
DR S REEL FG (A)
DR S REEL FG (B)
62-13
62-15
SS. 8-2
SS. 8-4
SS. 7-138
62-11
SS T REEL DRIVE
SS. 7-137
62-10
SS T REEL DIR CMD
IC1000. Q1000
REVERSE CNT
IC1001
PWM POWER CNT (T REEL MOTOR)
IC1004
WAVE FORM SHAPE
Q1002-1007
Q1008-1013
Q1001
PWM STARTER
IC805
BUF
IC1002
CURR DET
T REEL CURRENT
T REEL VOLT (-)
T REEL VOLT (+)
T REEL MOTOR -
T REEL MOTOR +
205-5. 6. 7
205-8. 9. 10
M006 T-REEL MOTOR
PM002 T-BRAKE
T-REEL
T-REEL FG SENSOR
205-2
205-3
205-13
205-12
T BRAKE SOL STR
T BRAKE SOL HLD
T REEL FG (A)
T REEL FG (B)
Q506
BRAKE SOL. DRIVE
T BRAKE SOL STARTER
T BRAKE SOL HOLDER
DR T REEL FG (A)
DR T REEL FG (B)
62-7
62-9
SS. 7-134
SS. 7-136
REC POWER CONT
IC610
Q603
REC ON/OFF CNT
IC611. 612
Q606
CTL REC DRIVE
Q604
Q605
IC605-609. 611. 812. 615
CTL PB AMP
IC610
IC606
BUF
IC609
CTL GAIN 1 (CTL PLAY)
CTL GAIN 4 (CTL GAIN)
H CTL GAIN8
CTL LPF
Q608
Q609
SS. 8-22
62-33
SS REC CTL
SS. 8-24
62-35
SS CTL REC ON
SS. 8-23
62-34
DR PB CTL
VPR. 25-58
61-1
DR AMP PB CTL
CTL HEAD X
CTL HEAD
212-1
212-2
1-1
1-2
CTL HEAD
DR AMP PB CTL
200-20
+6. 2V
200-1
-6. 2V
200-2
Q206. 208
Q205. 207
TC. 200-20
TC. 200-1
TC. 200-2
TC. 200-5
TC. 200-6
TC. 200-7
TC. 200-8
TC. 200-9
TC. 200-10
TC. 200-11
TC. 200-12
TC. 200-13
TC. 200-14
TC. 200-15
TC. 200-16
TC. 200-19
TC. 200-29
200-5
200-6
200-7
200-8
200-9
200-10
200-11
200-12
200-13
200-14
200-15
200-16
200-19
200-29
SS REC LTC
TC PB LTC
APR H OSC ON
APR H FULL ERS ON
APR H TC ERS ON
APR H TC LPF ON
APR TC H-PB/L-REC
APR H TC HPF ON
APR H REC G UP
APR H TC PB G UP
APR P MUTE HP/TC
TC CROSS TALK (X)
APR TC JP1
DR TC GAUSS (X)
Q719-724
DEGAUSSING HEAD DRIVER
DM DR GAUSS
52-37
52-38
52-39
52-40
52-41
52-42
52-43
52-44
52-45
52-46
52-47
52-48
52-50
52-36
SS. 8-56
SS. 8-55
APR. 5-69
APR. 5-53
APR. 5-54
APR. 5-55
APR. 5-56
APR. 5-57
APR. 5-59
APR. 5-60
APR. 5-81
AE. 800-11
APR. 5-58
DM. 10-91

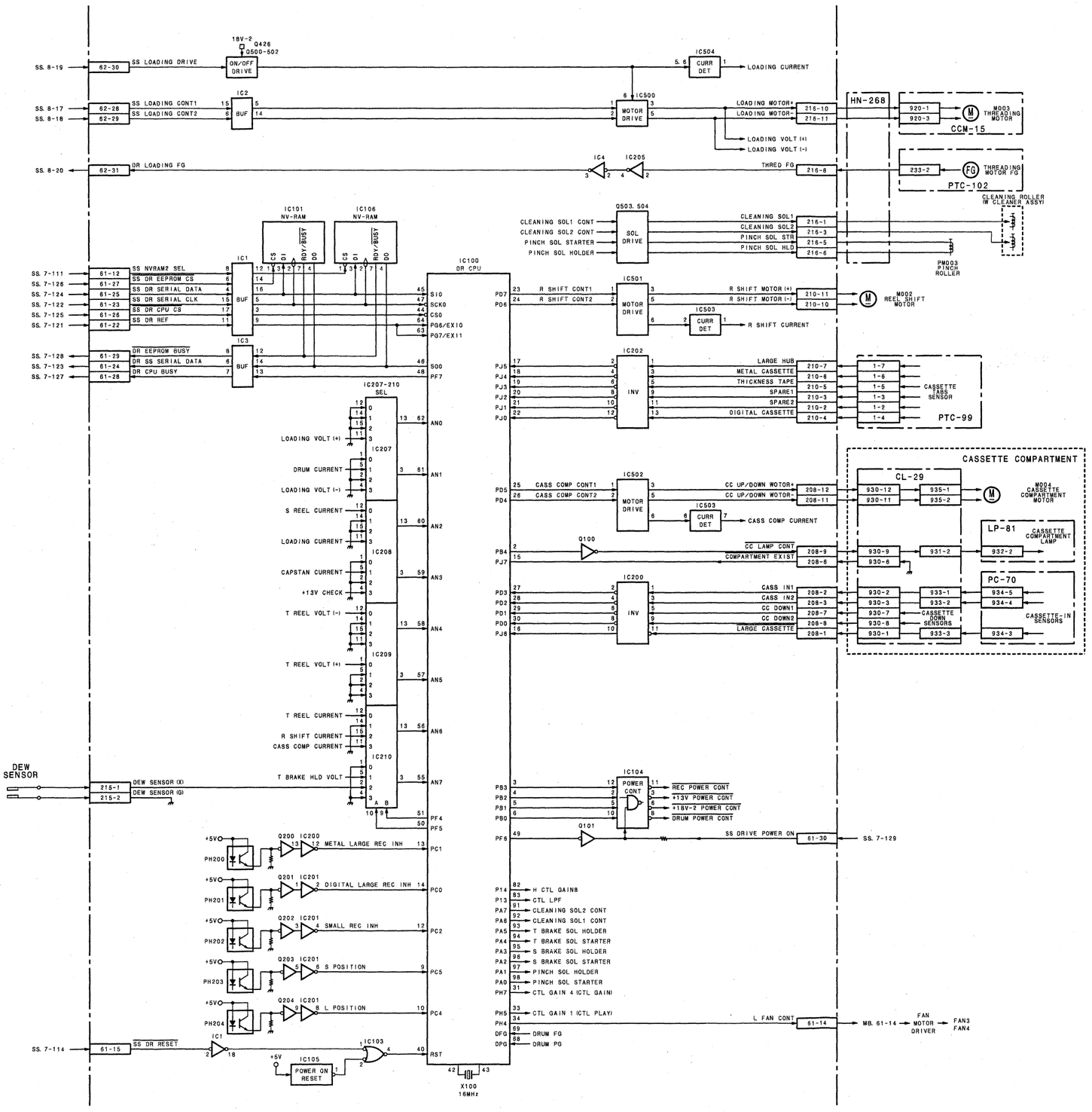

Solenoid drivers (Pinch, Brakes, Cleaning)
Motor drivers (Drum, Capstan, Reels, Threading, Reel shift, Cassette up/down)
REC inhibit sensors, Reel position sensors

DR-508

Lot No. 431- For HDW-2000, M2000/P, M2100/P, A2100
Lot No. 4C2- For HDW-D2000
Lot No. 462- For HDW-S2000/P
Lot No. 434- For DVW-2000/P, M2000/P
Lot No. 431- For MSW-2000, A2000/P, M2000/P, M2100/P
Lot No. 495- For MSW-M2000E/P, M2100E/P

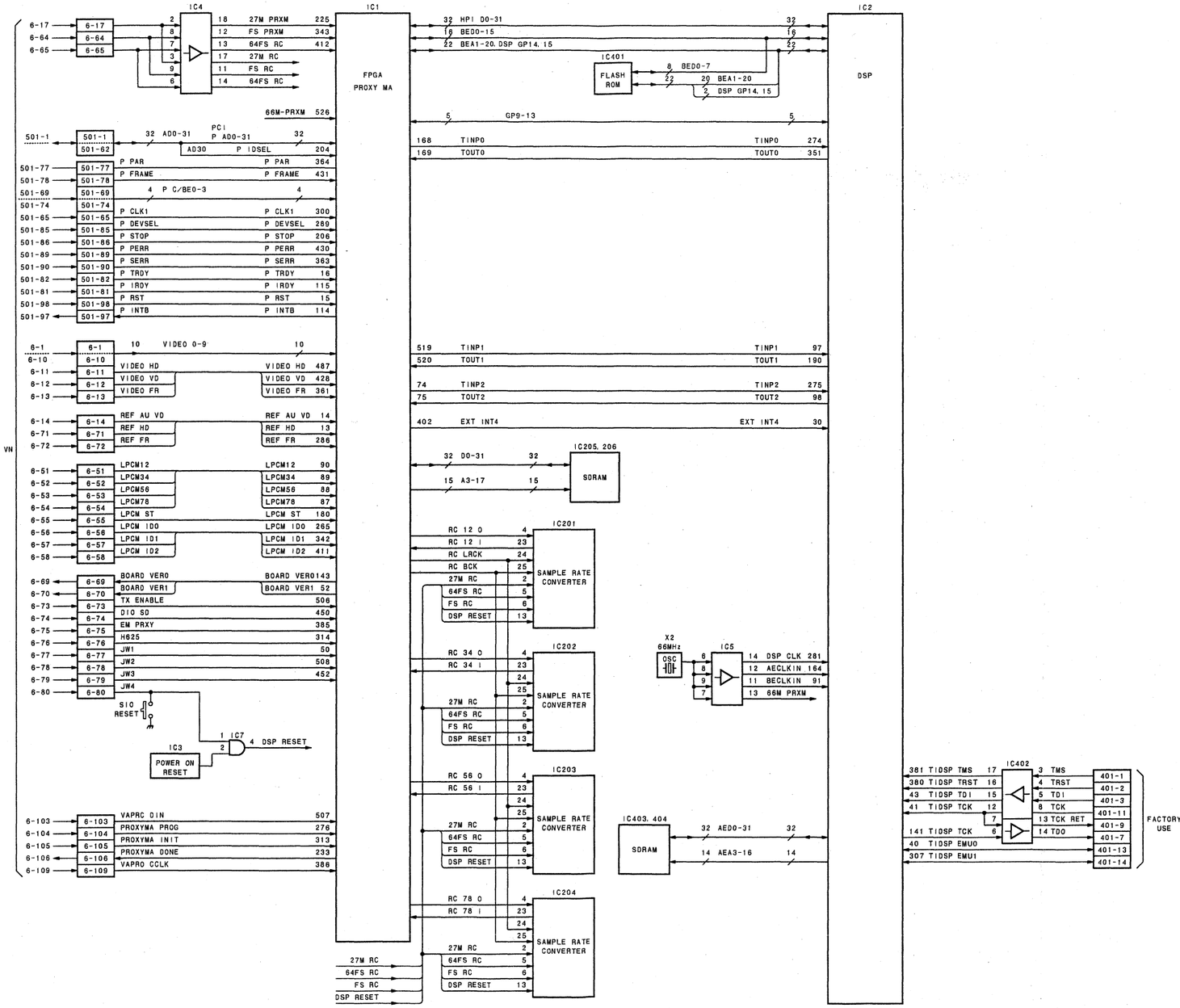

Proxy audio/video signal processor

DSP-109

Lot No. 495- For MSW-M2000E/P, M2100E/P

Lot No. 495- For BKMW-E3000 (Option for MSW)

EPR-1 (1/2) DVW, MSW
SUFFIX: -17

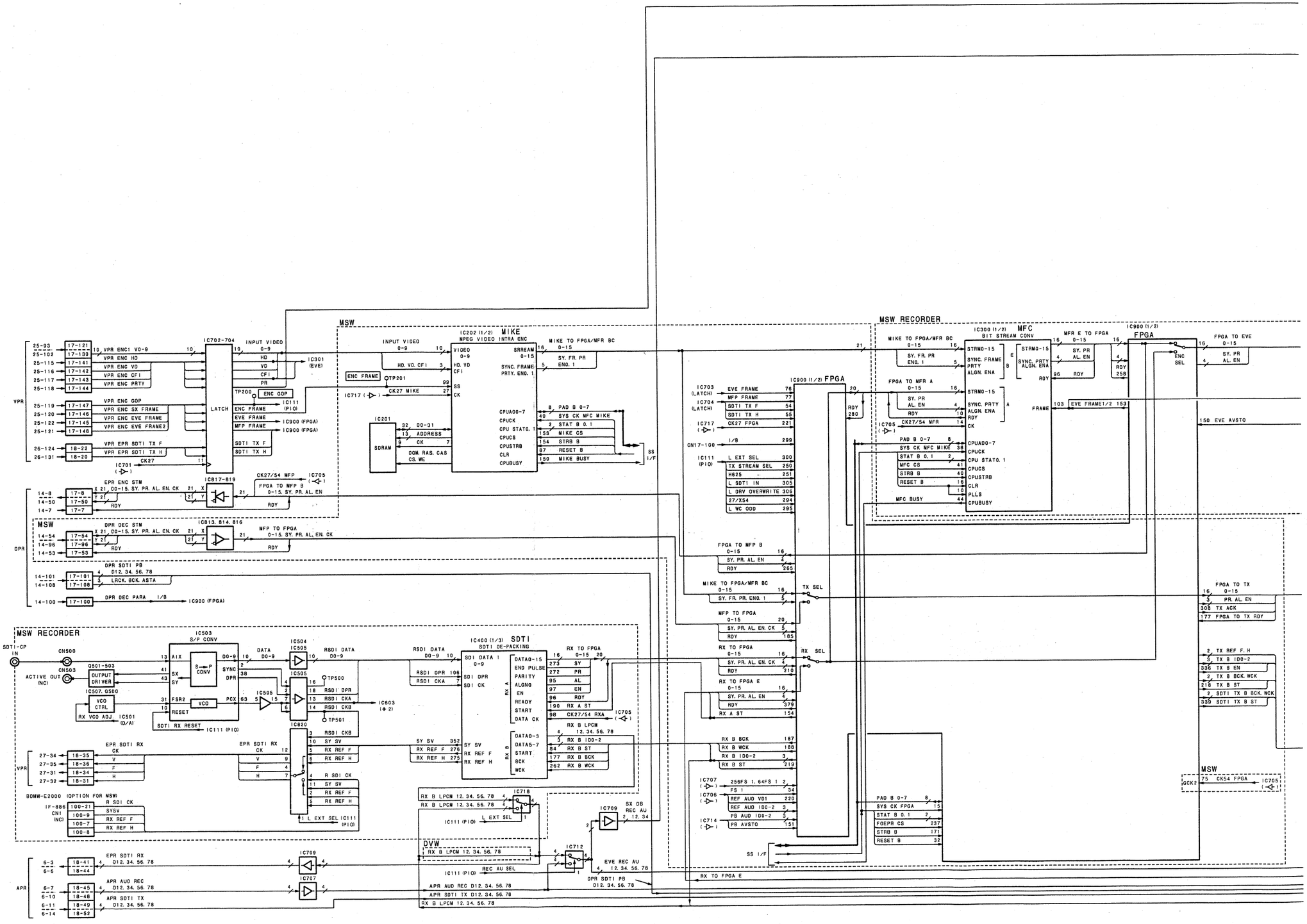

3-74 (c)

EPR-1 (1/2) DVW, MSW SUFFIX: -17

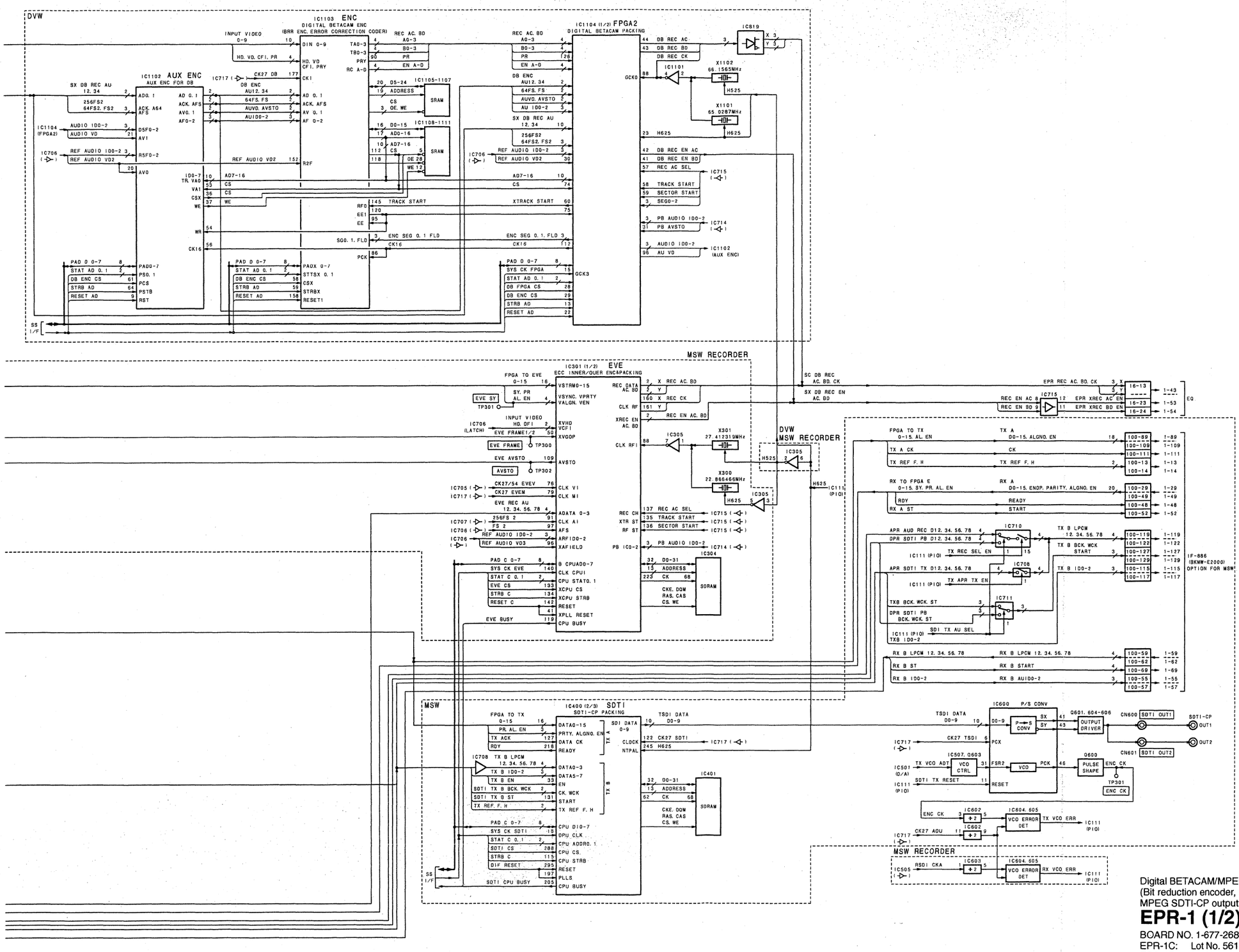

Digital BETACAM/MPEG IMX encoder (digital REC) processor
(Bit reduction encoder, ECC outer encoder, MPEG SDTI-CP input, MPEG SDTI-CP output)

EPR-1 (1/2)

BOARD NO. 1-677-268-17

EPR-1C: Lot No. 561- For DVW-2000/P, M2000/P
EPR-1B: Lot No. 561- For MSW-2000, A2000/P, M2000/P, M2000E/P
EPR-1BA: Lot No. 561- For MSW-M2100/P, M2100E/P

EPR-1 (2/2) DVW, MSW
SUFFIX: -17

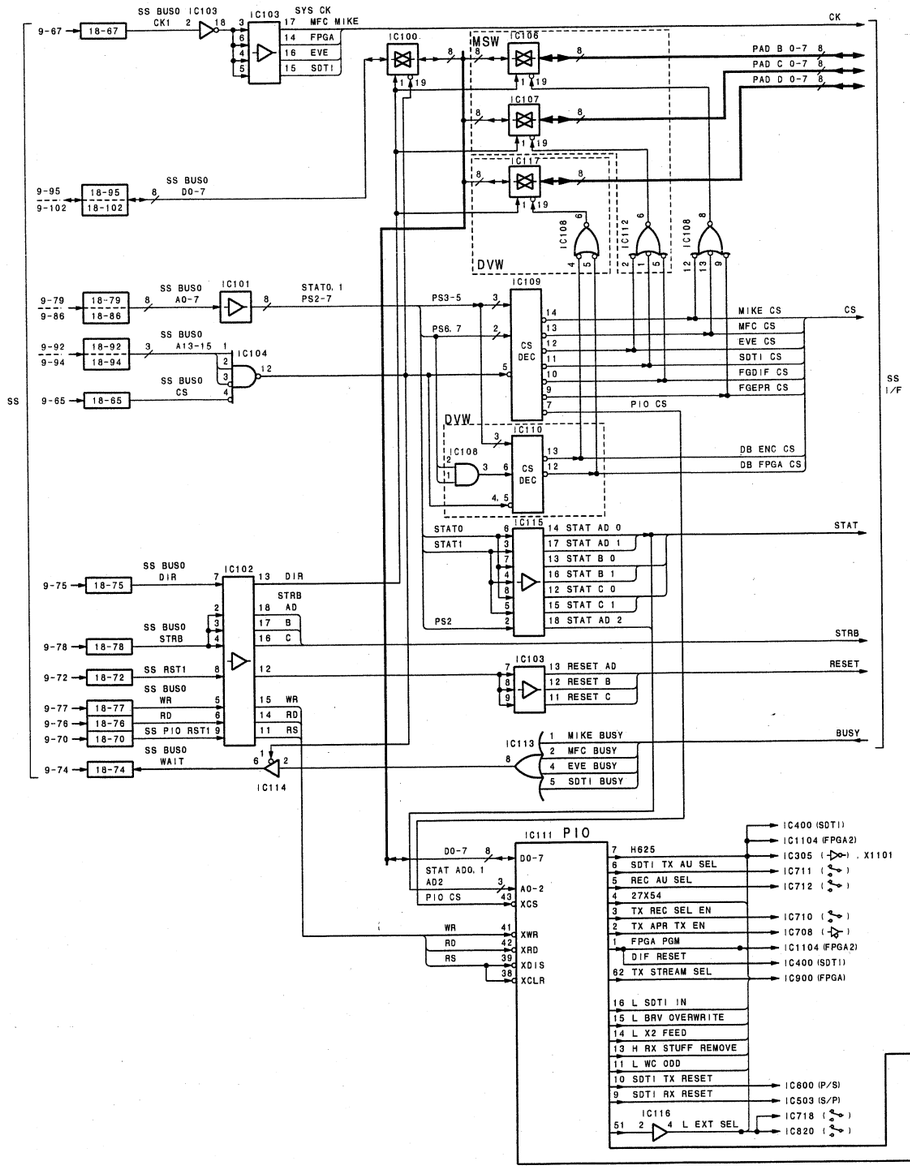

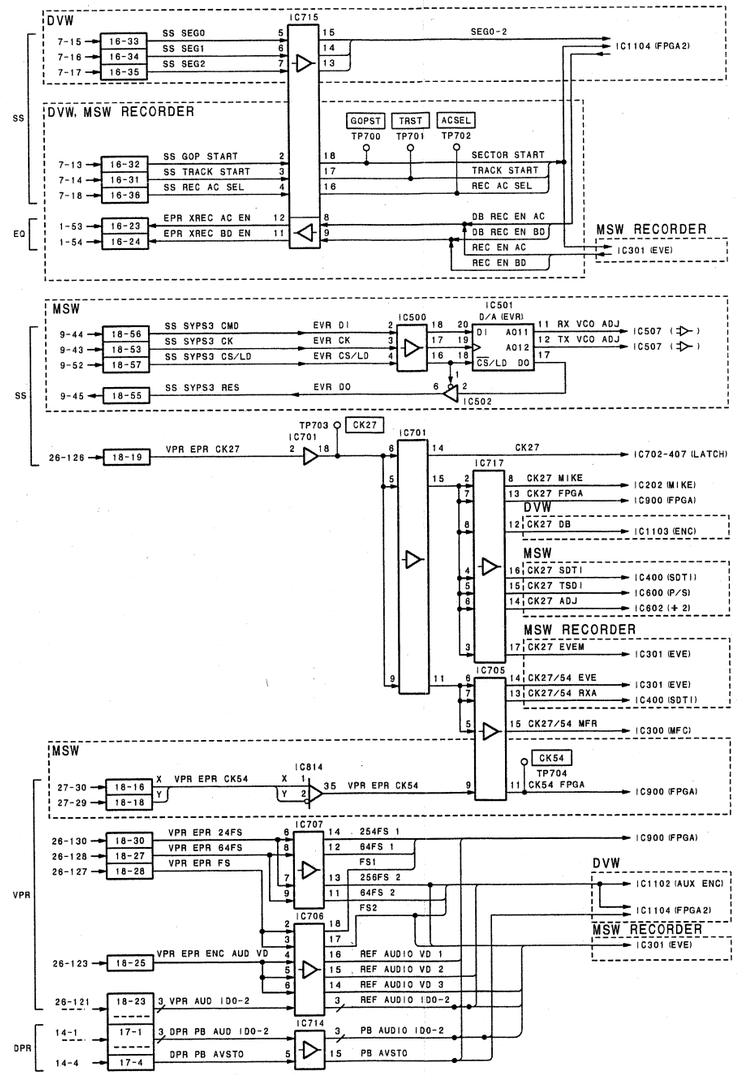

Digital BETACAM/MPEG IMX encoder (digital REC) processor
(Bit reduction encoder, ECC outer encoder, MPEG SDTI-CP input, MPEG SDTI-CP output)

EPR-1 (2/2)

BOARD NO. 1-677-268-17
EPR-1C: Lot No. 561- For DVW-2000/P, M2000/P
EPR-1B: Lot No. 561- For MSW-2000, A2000/P, M2000/P, M2000
EPR-1BA: Lot No. 561- For MSW-M2100/P, M2100E/P

3-77 (c)

EPR-1 (1/2) DVW, MSW
SUFFIX: -16

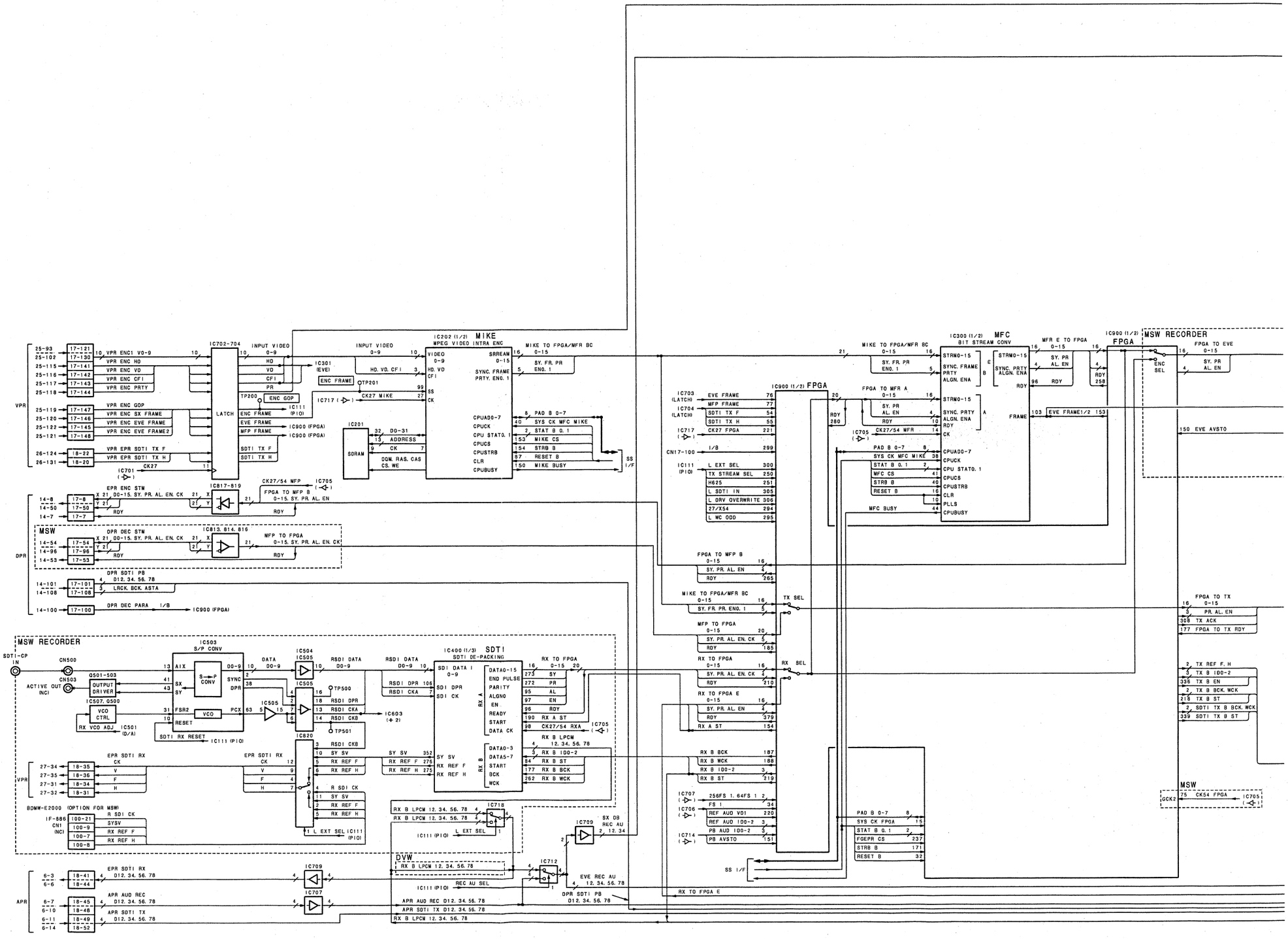

3-74 (b)

EPR-1 (1/2) DVW, MSW SUFFIX: -16

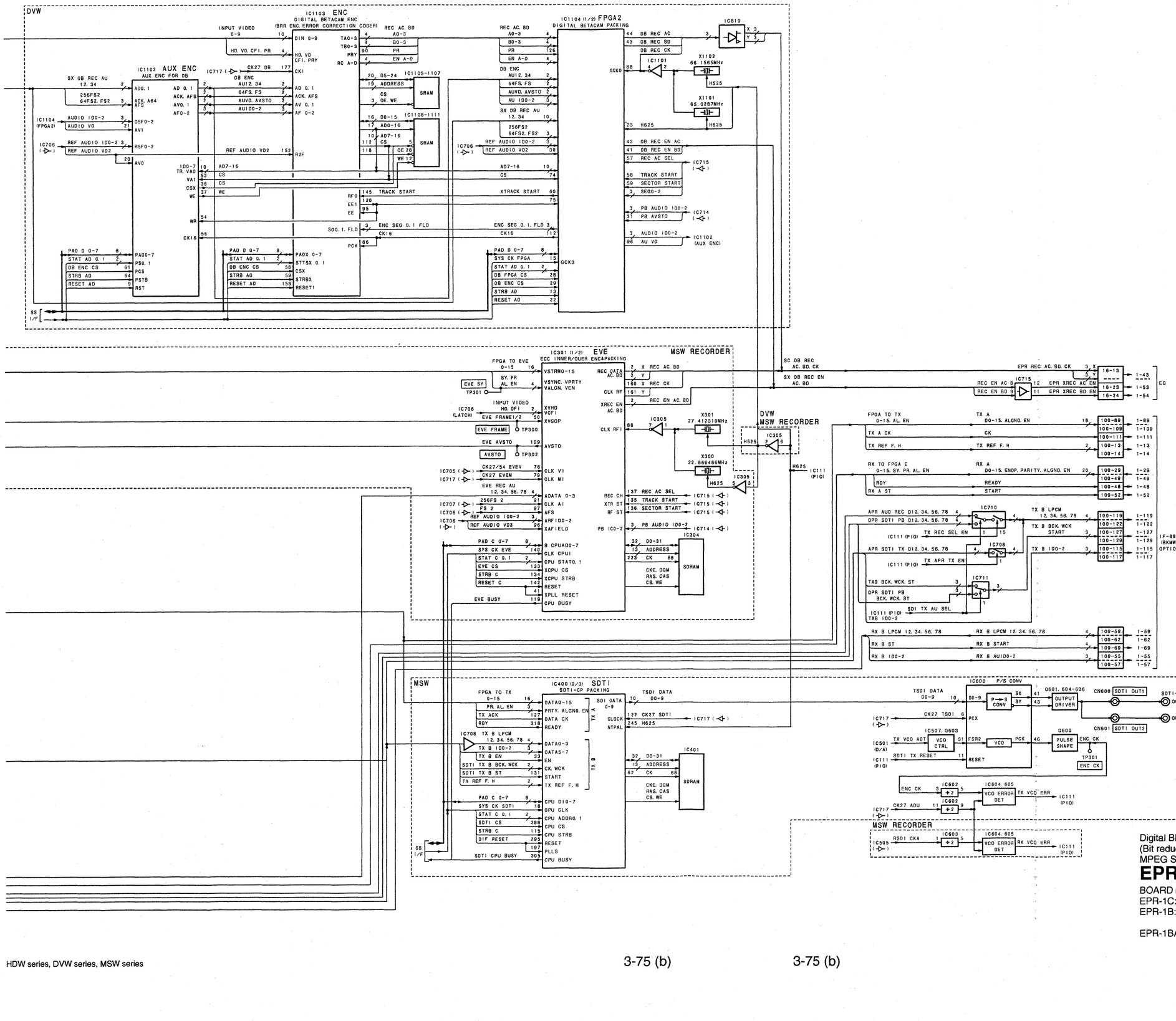

Digital BETACAM/MPEG IMX encoder (digital REC) processor
(Bit reduction encoder, ECC outer encoder, MPEG SDTI-CP input, MPEG SDTI-CP output)

EPR-1 (1/2)

BOARD NO. 1-677-268-16

EPR-1C:	Lot No. 434-554	For DVW-2000/P, M2000/P
EPR-1B:	Lot No. 421-554	For MSW-2000, A2000/P, M2000/P
	Lot No. 495-554	For MSW-M2000E/P
EPR-1BA:	Lot No. 421-554	For MSW-M2100/P
	Lot No. 495-554	For MSW-M2100E/P

3-75 (b)

EPR-1 (2/2) DVW, MSW
SUFFIX: -16

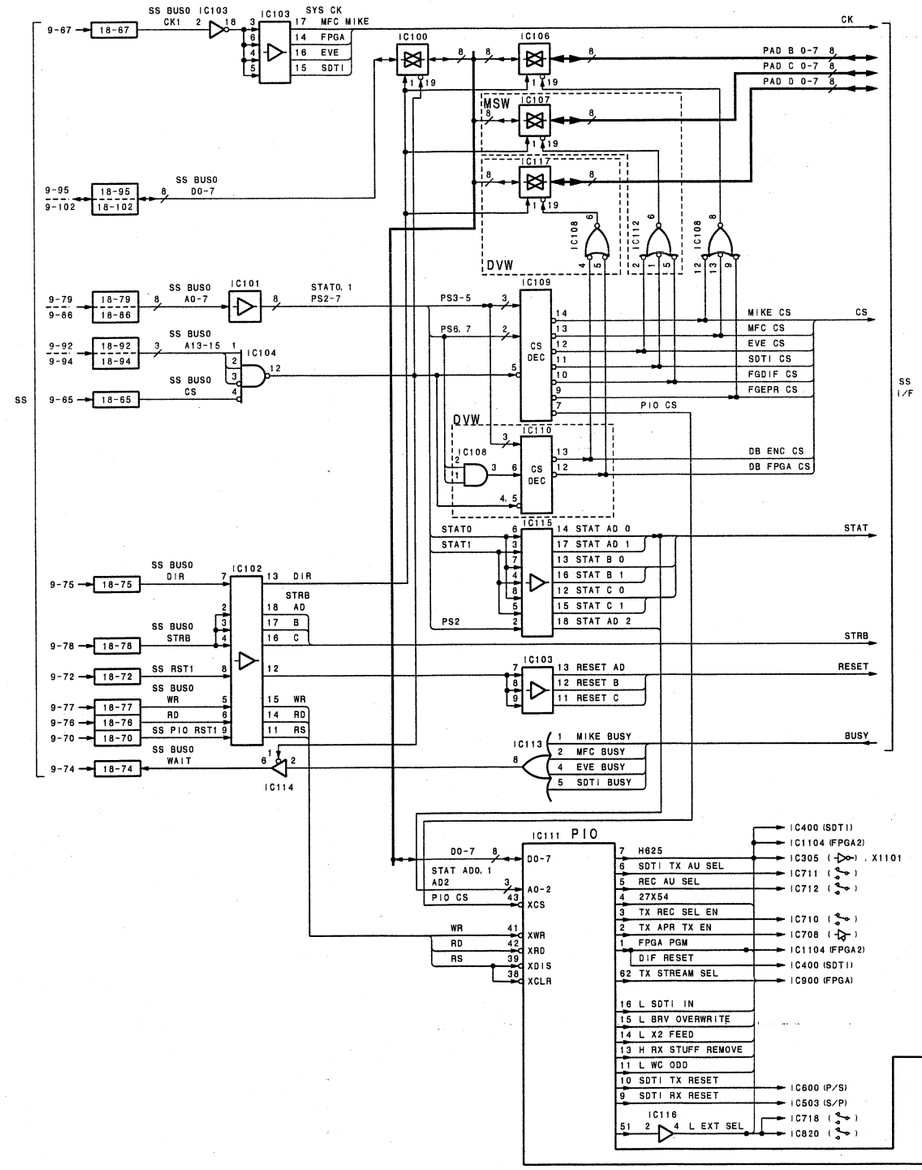

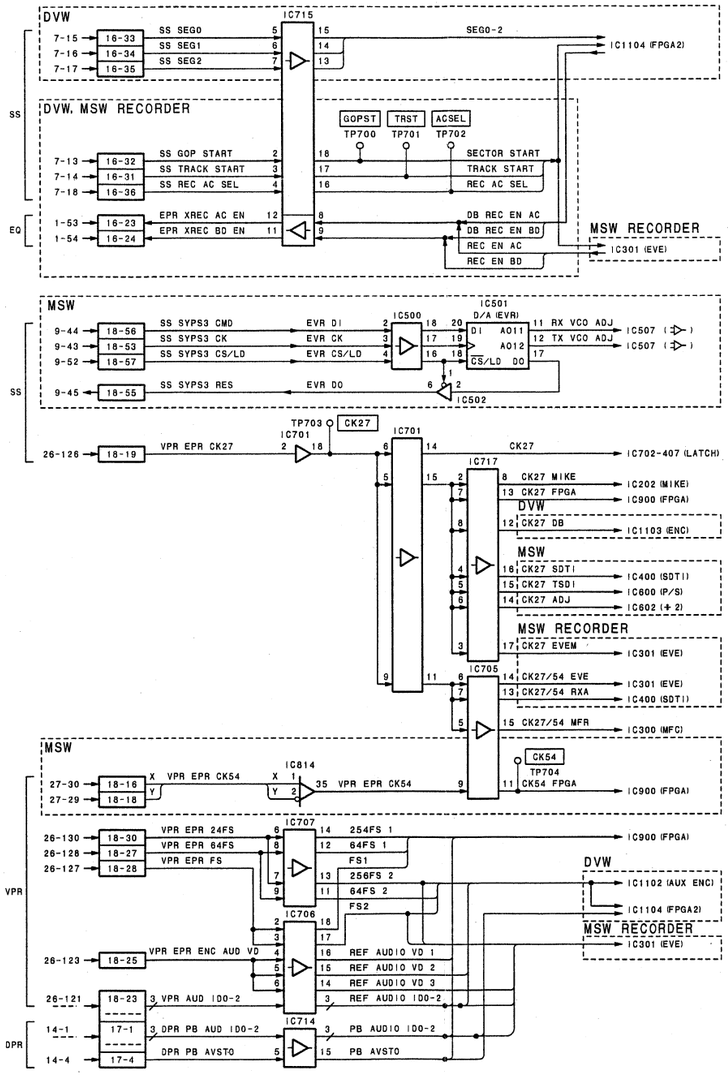

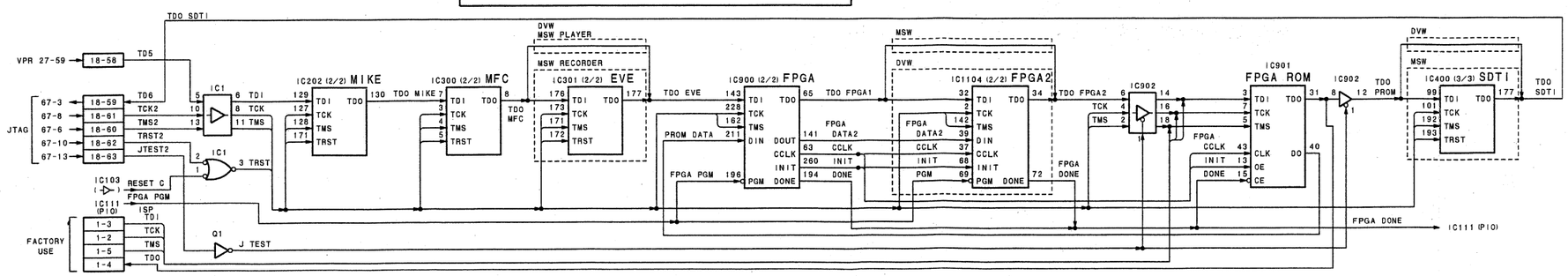

Digital BETACAM/MPEG IMX encoder (digital REC) processor
(Bit reduction encoder, ECC outer encoder, MPEG SDTI-CP input, MPEG SDTI-CP output)

EPR-1 (2/2)

BOARD NO. 1-677-268-16

EPR-1C:	Lot No. 434-554	For DVW-2000/P, M2000/P
EPR-1B:	Lot No. 421-554	For MSW-2000, A2000/P, M2000/P
	Lot No. 495-554	For MSW-M2000E/P
EPR-1BA:	Lot No. 421-554	For MSW-M2100/P
	Lot No. 495-554	For MSW-M2100E/P

3-77 (b)

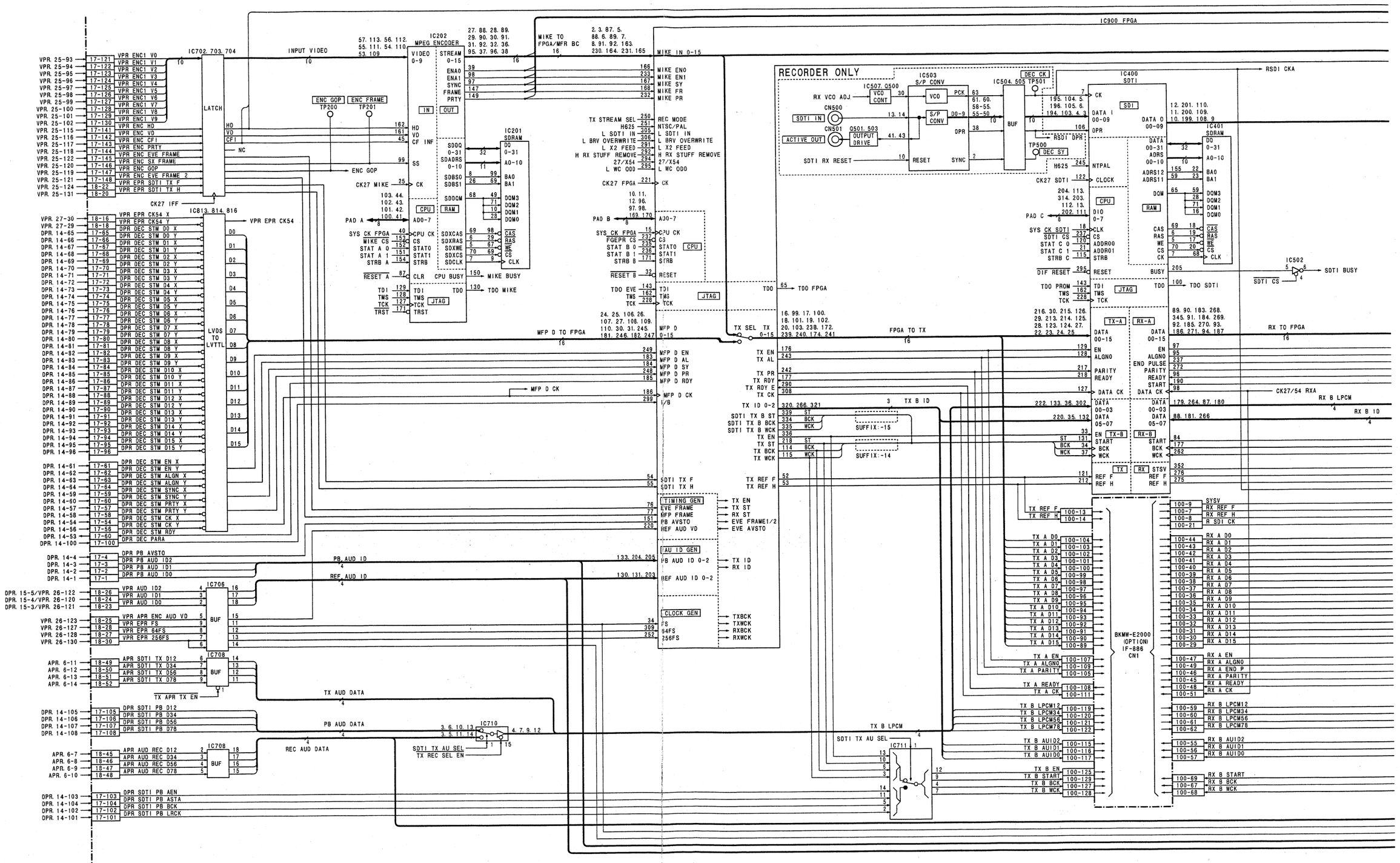
IC900 FPGA
RECORDER ONLY
IC202 MPEG ENCODER
IC201 SDRAM
IC400 SDTI
IC401 SDRAM
IC503 S/P CONV
IC507 0500
IC504 505 TP501
IC502
IC702 703 704
IC706
IC708
IC710
IC711
IC813 814 816
LATCH
LVDS TO LVTTL
BUF
JTAG
CPU
RAM
SDI
TIMING GEN
AU ID GEN
CLOCK GEN
INPUT VIDEO
ENC GOP
ENC FRAME
CK27 IFF
CK27 MIKE
CK27 FPGA
CK27 SDTI
RSDI CKA
SDTI BUSY
SDTI CS
TDO FPGA
TDO SDTI
TDO MIKE
MIKE BUSY
MIKE TO FPGA/MFR BC
MIKE IN 0-15
MFP D TO FPGA
MFP D 0-15
MFP D CK
TX SEL TX 0-15
FPGA TO TX
TX B ID
SUFFIX:-15
SUFFIX:-14
TX B LPCM
SDTI TX AU SEL
TX SEL
TX AUD DATA
PB AUD DATA
REC AUD DATA
PB AUD ID
REF AUD ID
TX APR TX EN
SDTI TX AU EN
RX TO FPGA
CK27/54 RXA
RX B LPCM
RX B ID
BKMW-E2000 (OPTION) IF-886 CN1
VPR EPR CK54
RSDI DPR
RSDI SY
SDTI RX RESET
SDTI IN
ACTIVE OUT
RX VCO ADJ
REC MODE
TX STREAM SEL
MIKE ENO
MIKE EN1
MIKE SY
MIKE FR
MIKE PR
VPR. 25-93
VPR. 25-94
VPR. 25-95
VPR. 25-96
VPR. 25-97
VPR. 25-98
VPR. 25-99
VPR. 25-100
VPR. 25-101
VPR. 25-102
VPR. 25-115
VPR. 25-116
VPR. 25-117
VPR. 25-118
VPR. 25-122
VPR. 25-120
VPR. 25-119
VPR. 25-121
VPR. 25-124
VPR. 25-131
VPR. 27-30
VPR. 27-29
DPR. 14-65
DPR. 14-66
DPR. 14-67
DPR. 14-68
DPR. 14-71
DPR. 14-72
DPR. 14-73
DPR. 14-74
DPR. 14-75
DPR. 14-76
DPR. 14-77
DPR. 14-78
DPR. 14-79
DPR. 14-80
DPR. 14-81
DPR. 14-82
DPR. 14-83
DPR. 14-84
DPR. 14-85
DPR. 14-86
DPR. 14-87
DPR. 14-88
DPR. 14-89
DPR. 14-90
DPR. 14-91
DPR. 14-92
DPR. 14-93
DPR. 14-94
DPR. 14-95
DPR. 14-96
DPR. 14-61
DPR. 14-62
DPR. 14-63
DPR. 14-64
DPR. 14-59
DPR. 14-60
DPR. 14-57
DPR. 14-58
DPR. 14-54
DPR. 14-56
DPR. 14-53
DPR. 14-100
DPR. 14-4
DPR. 14-3
DPR. 14-2
DPR. 14-1
DPR. 15-5/VPR. 26-122
DPR. 15-4/VPR. 26-120
DPR. 15-3/VPR. 26-121
VPR. 26-123
VPR. 26-127
VPR. 26-128
VPR. 26-130
APR. 6-11
APR. 6-12
APR. 6-13
APR. 6-14
DPR. 14-105
DPR. 14-106
DPR. 14-107
DPR. 14-108
APR. 6-7
APR. 6-8
APR. 6-9
APR. 6-10
DPR. 14-103
DPR. 14-104
DPR. 14-102
DPR. 14-101
VPR ENC1 V0
VPR ENC1 V1
VPR ENC1 V2
VPR ENC1 V3
VPR ENC1 V4
VPR ENC1 V5
VPR ENC1 V6
VPR ENC1 V7
VPR ENC1 V8
VPR ENC1 V9
VPR ENC HD
VPR ENC VD
VPR ENC CFI
VPR ENC PRTY
VPR ENC EVE FRAME
VPR ENC SX FRAME
VPR ENC GOP
VPR ENC EVE FRAME 2
VPR EPR SDTI TX F
VPR EPR SDTI TX H
VPR EPR CK54 X
VPR EPR CK54 Y
DPR DEC STM 00 X
DPR DEC STM 00 Y
DPR DEC STM 01 X
DPR DEC STM 01 Y
DPR DEC STM 02 X
DPR DEC STM 02 Y
DPR DEC STM 03 X
DPR DEC STM 03 Y
DPR DEC STM 04 X
DPR DEC STM 04 Y
DPR DEC STM 05 X
DPR DEC STM 05 Y
DPR DEC STM 06 X
DPR DEC STM 06 Y
DPR DEC STM 07 X
DPR DEC STM 07 Y
DPR DEC STM 08 X
DPR DEC STM 08 Y
DPR DEC STM 09 X
DPR DEC STM 09 Y
DPR DEC STM 010 X
DPR DEC STM 010 Y
DPR DEC STM 011 X
DPR DEC STM 011 Y
DPR DEC STM 012 X
DPR DEC STM 012 Y
DPR DEC STM 013 X
DPR DEC STM 013 Y
DPR DEC STM 014 X
DPR DEC STM 014 Y
DPR DEC STM 015 X
DPR DEC STM 015 Y
DPR DEC STM EN X
DPR DEC STM EN Y
DPR DEC STM ALGN X
DPR DEC STM ALGN Y
DPR DEC STM SYNC X
DPR DEC STM SYNC Y
DPR DEC STM PRTY X
DPR DEC STM PRTY Y
DPR DEC STM CK X
DPR DEC STM CK Y
DPR DEC STM RDY
DPR DEC PARA
DPR PB AVSTO
DPR PB AUD ID2
DPR PB AUD ID1
DPR PB AUD ID0
VPR AUD ID2
VPR AUD ID1
VPR AUD ID0
VPR APR ENC AUD VD
VPR EPR FS
VPR EPR 64FS
VPR EPR 256FS
APR SDTI TX D12
APR SDTI TX D34
APR SDTI TX D56
APR SDTI TX D78
APR AUD REC D12
APR AUD REC D34
APR AUD REC D56
APR AUD REC D78
DPR SDTI PB D12
DPR SDTI PB D34
DPR SDTI PB D56
DPR SDTI PB D78
DPR SDTI PB AEN
DPR SDTI PB ASTA
DPR SDTI PB BCK
DPR SDTI PB LRCK
SYS CK FPGA
MIKE CS
STAT A 0
STAT A 1
STRB A
RESET A
SYS CK SDTI
SDTI CS
STAT C 0
STAT C 1
STRB C
DIF RESET
FGEPR CS
STAT B 0
STAT B 1
STRB B
RESET B
TDO EVE
TDO PROM
TX EN
TX AL
TX PR
TX RDY
TX RDY E
TX CK
TX ID 0-2
SDTI TX B ST
SDTI TX B BCK
SDTI TX B WCK
TX ST
TX BCK
TX WCK
SDTI TX F
SDTI TX H
TX REF F
TX REF H
MFP D EN
MFP D AL
MFP D SY
MFP D PR
MFP D RDY
MFP D CK
TX A D0
TX A D1
TX A D2
TX A D3
TX A D4
TX A D5
TX A D6
TX A D7
TX A D8
TX A D9
TX A D10
TX A D11
TX A D12
TX A D13
TX A D14
TX A D15
TX A EN
TX A ALGN0
TX A PARITY
TX A READY
TX A CK
TX B LPCM12
TX B LPCM34
TX B LPCM56
TX B LPCM78
TX B AUID2
TX B AUID1
TX B AUID0
TX B EN
TX B START
TX B BCK
TX B WCK
RX A D0
RX A D1
RX A D2
RX A D3
RX A D4
RX A D5
RX A D6
RX A D7
RX A D8
RX A D9
RX A D10
RX A D11
RX A D12
RX A D13
RX A D14
RX A D15
RX A EN
RX A ALGN0
RX A END P
RX A PARITY
RX A READY
RX A CK
RX B LPCM12
RX B LPCM34
RX B LPCM56
RX B LPCM78
RX B AUID2
RX B AUID1
RX B AUID0
RX B START
RX B BCK
RX B WCK
SYSV
RX REF F
RX REF H
R SDI CK
TDI
TMS
TCK
TRST
TDO
SDDO 0-31
SDADRS 0-10
SDBS0
SDBS1
SDDQM
SDXCAS
SDXRAS
SDXWE
SDXCS
SDCLK
DQ 0-31
A0-10
BA0
BA1
DQM3
DQM2
DQM1
DQM0
CAS
RAS
WE
CS
CLK
CPU CK
CS
STAT0
STAT1
STRB
CLR
CPU BUSY
RESET
BUSY
HD
VD
CF INF
SS
CFI
NC
IN
OUT
DEC CK
DEC SY
H625
NTPAL
CLOCK
DIO 0-7
ADDR00
ADDR01
DATA 00-09
DATA 00-15
DATA 00-31
ADRS 00-10
DPR
DPR DPR
ADRS12
ADRS11
DQM
CAS
RAS
WE
CS
CLK
BUF
PCK
VCO
VCO CONT
S/P CONV
RESET
SYNC
DO-9
DPR
OUTPUT DRIVE
EN
ALGN0
PARITY
READY
START
DATA CK
DATA 00-03
DATA 05-07
TX-A
RX-A
TX-B
RX-B
TX
RX
STSV
REF F
REF H
JTAG
TDI
TMS
TCK
TDO
BUSY
RESET
TDO FPGA
TDO SDTI
TDO MIKE
MIKE BUSY
TX B ID
SUFFIX:-15
SUFFIX:-14
TX B LPCM
SDTI TX AU SEL
TX SEL
TX AUD DATA
PB AUD DATA
REC AUD DATA
PB AUD ID
REF AUD ID
TX APR TX EN
SDTI TX AU EN
RX TO FPGA
CK27/54 RXA
RX B LPCM
RX B ID
BKMW-E2000 (OPTION) IF-886 CN1
VPR EPR CK54
RSDI DPR
RSDI SY
SDTI RX RESET
SDTI IN
ACTIVE OUT
RX VCO ADJ
REC MODE
TX STREAM SEL
MIKE ENO
MIKE EN1
MIKE SY
MIKE FR
MIKE PR

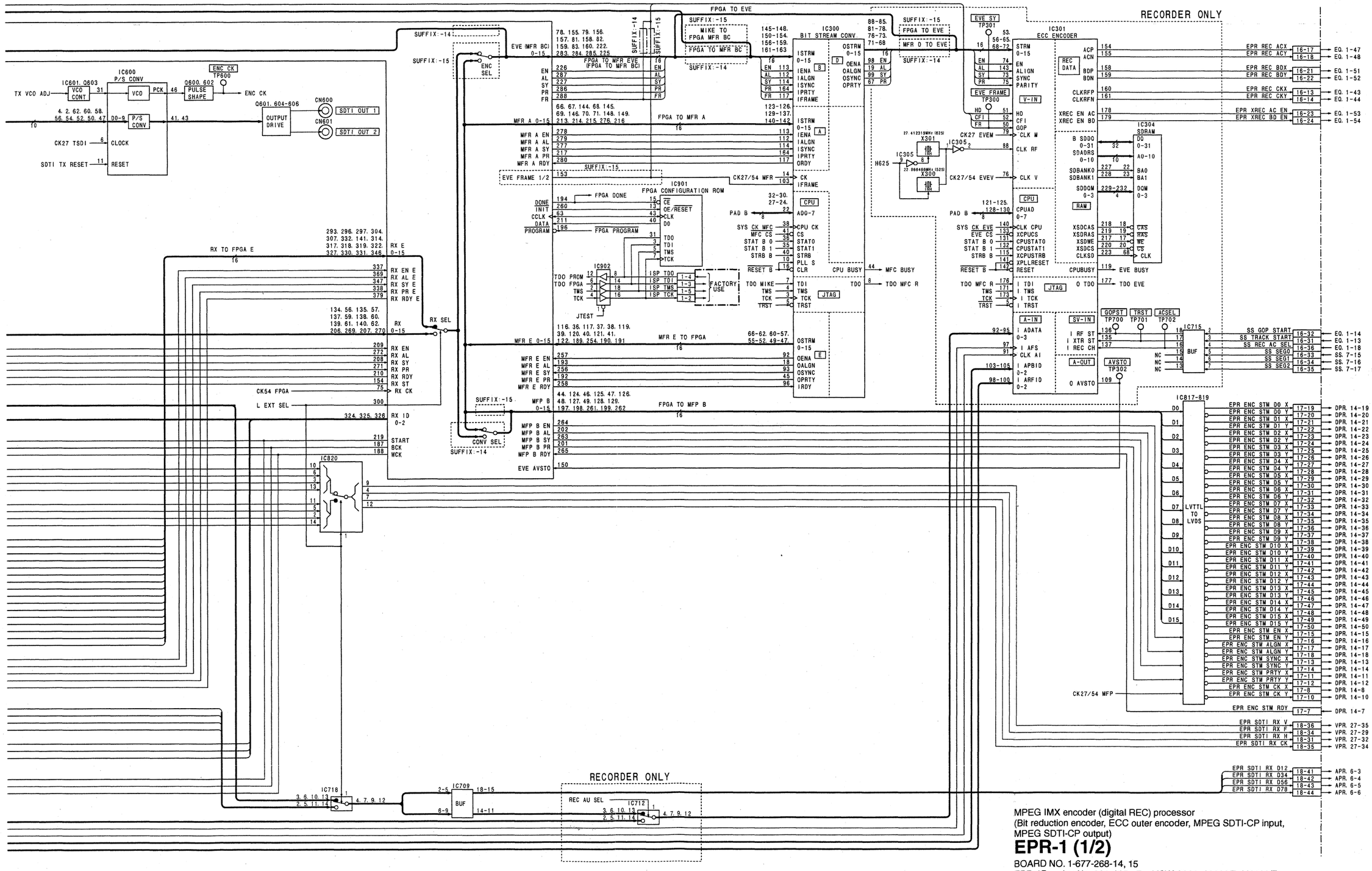

MPEG IMX encoder (digital REC) processor
(Bit reduction encoder, ECC outer encoder, MPEG SDTI-CP input, MPEG SDTI-CP output)

EPR-1 (1/2)

BOARD NO. 1-677-268-14, 15
EPR-1B: Lot No. 261-415 For MSW-2000, A2000/P, M2000/P
EPR-1BA: Lot No. 261-415 For MSW-M2100/P

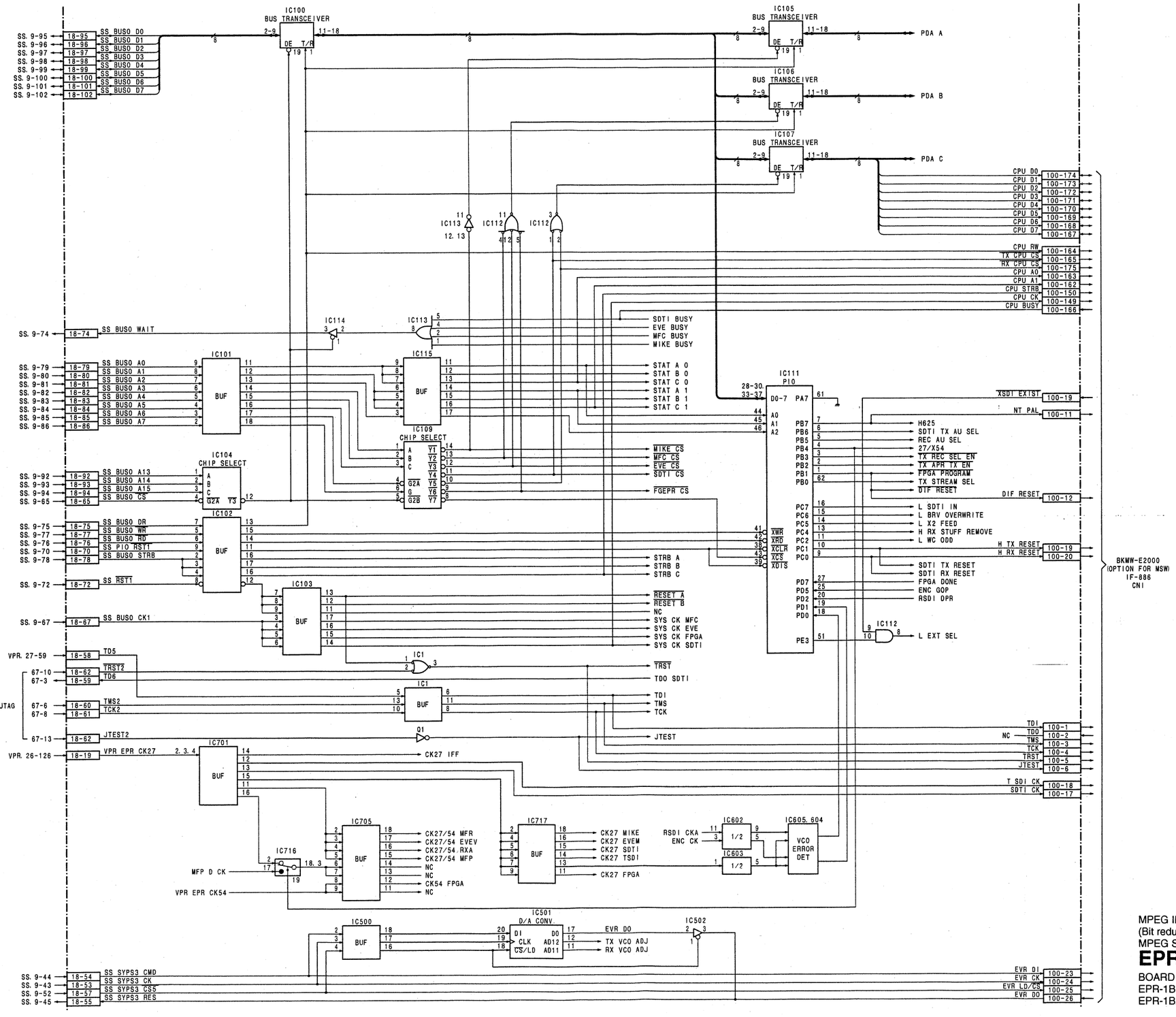

MPEG IMX encoder (digital REC) processor
(Bit reduction encoder, ECC outer encoder, MPEG SDTI-CP input, MPEG SDTI-CP output)

EPR-1 (2/2)

BOARD NO. 1-677-268-14, 15
EPR-1B: Lot No. 261-415 For MSW-2000, A2000/P, M2000/P
EPR-1BA: Lot No. 261-415 For MSW-M2100/P

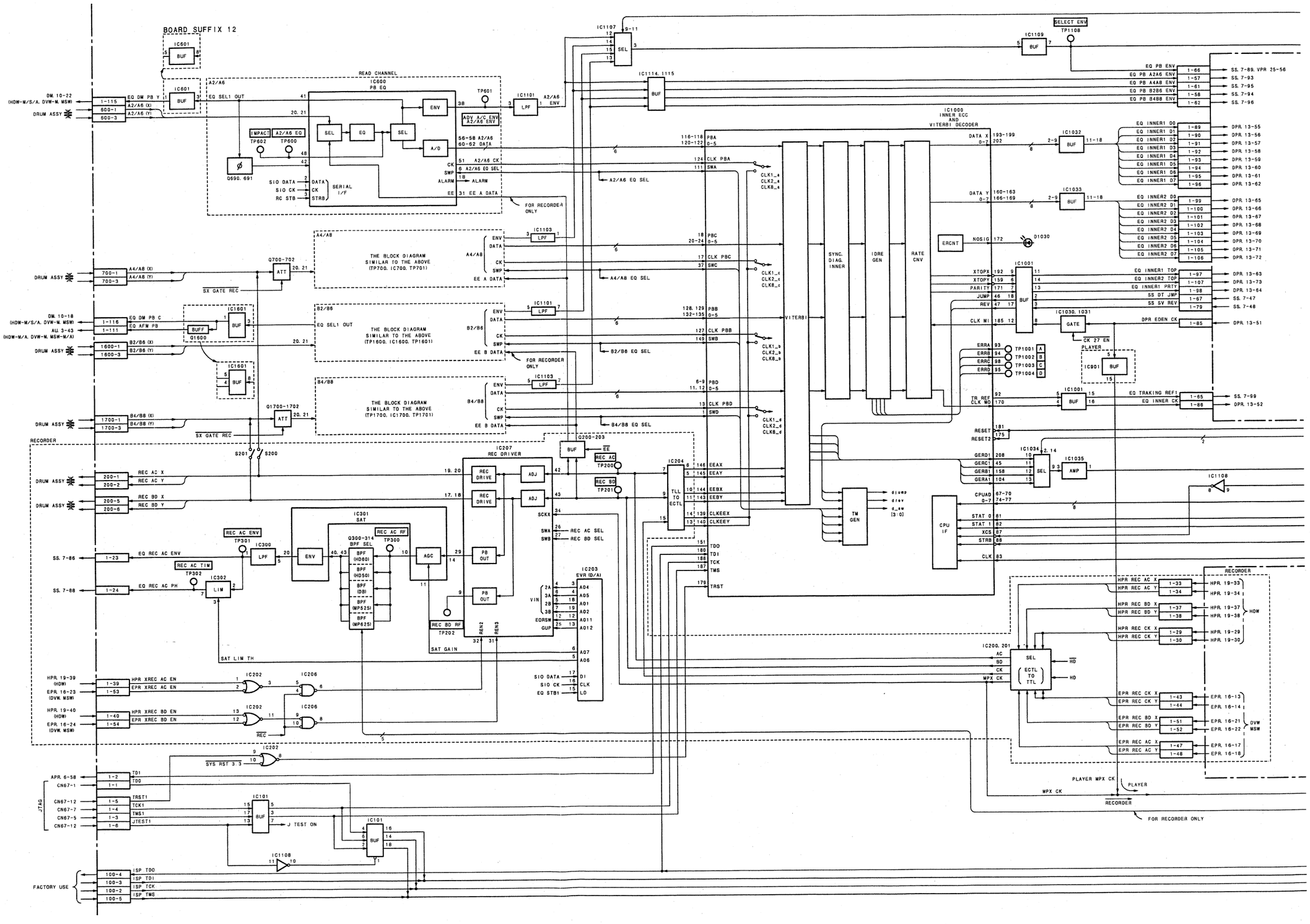
BOARD SUFFIX 12
READ CHANNEL
IC600
PB EQ
THE BLOCK DIAGRAM SIMILAR TO THE ABOVE (TP700, IC700, TP701)
THE BLOCK DIAGRAM SIMILAR TO THE ABOVE (TP1600, IC1600, TP1601)
THE BLOCK DIAGRAM SIMILAR TO THE ABOVE (TP1700, IC1700, TP1701)
IC1000
INNER ECC AND VITERBI DECODER
SYNC. DIAG. INNER
IDRE GEN
RATE CNV
VITERBI
TM GEN
CPU IF
IC207
REC DRIVER
IC301
SAT
IC203
EVR (D/A)
IC204
TLL TO ECTL
IC200, 201
SEL
ECTL TO TTL
RECORDER
FOR RECORDER ONLY
PLAYER MPX CK
MPX CK
PLAYER
FACTORY USE
JTAG
J TEST ON
SAT LIM TH
SAT GAIN
SX GATE REC
DRUM ASSY

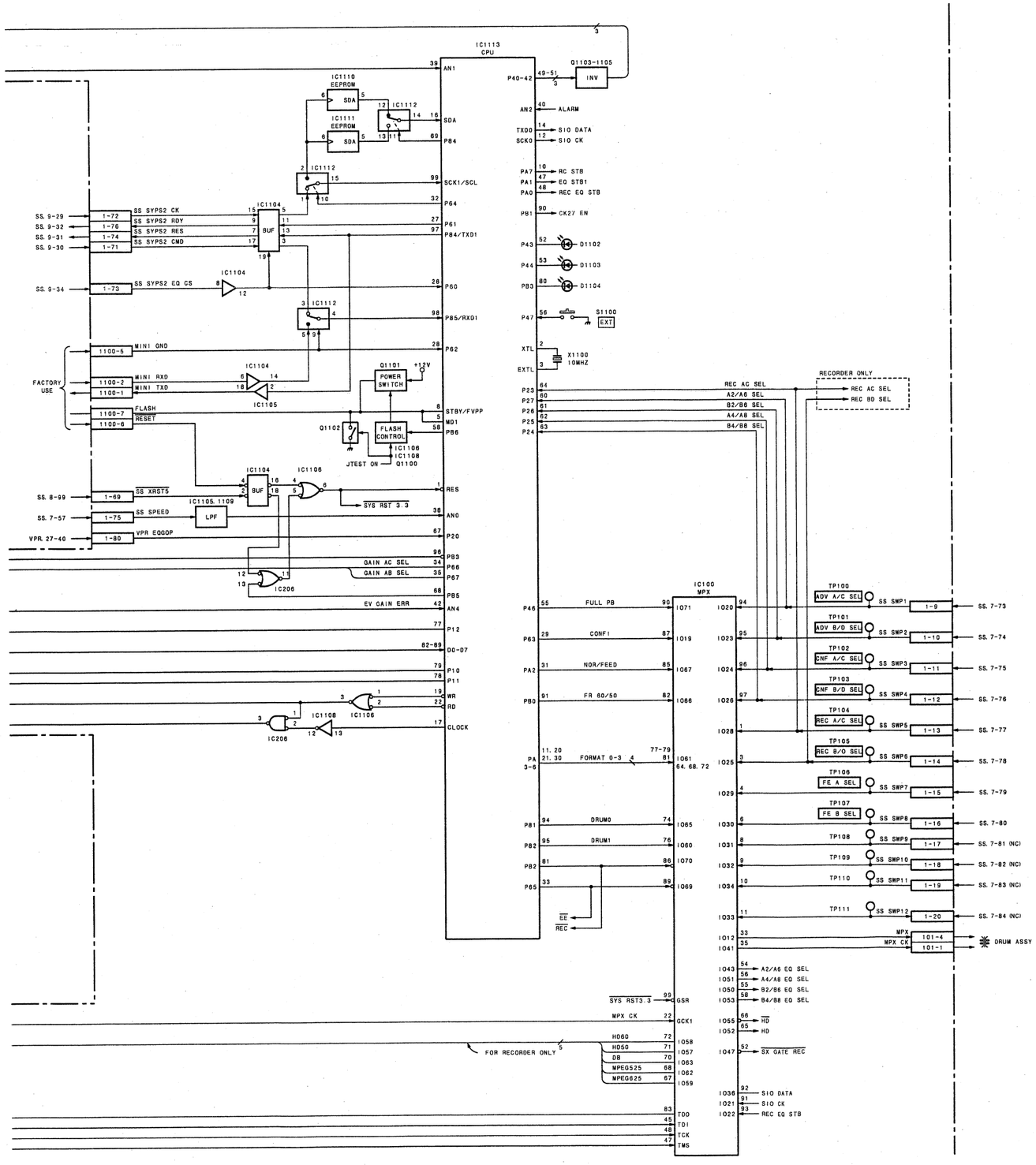

RF equalizer, ECC inner decoder

EQ-84

EQ-84H:	Lot No. 261-	For HDW-2000, M2000/P
	Lot No. 4C2-	For HDW-D2000
	Lot No. 462-	For HDW-S2000/P
	Lot No. 261-	For MSW-2000
EQ-84AH:	Lot No. 261-	For HDW-M2100/P, A2100
EQ-84:	Lot No. 434-	For DVW-2000/P, M2000/P
	Lot No. 261-	For MSW-A2000/P, M2000/P
	Lot No. 495-	For MSW-M2000E/P
EQ-84A:	Lot No. 261-	For MSW-M2100/P
	Lot No. 495-	For MSW-M2100E/P

HIF-1 (1/2) HDW, BKMW-104 (for DVW, MSW) SUFFIX: -24

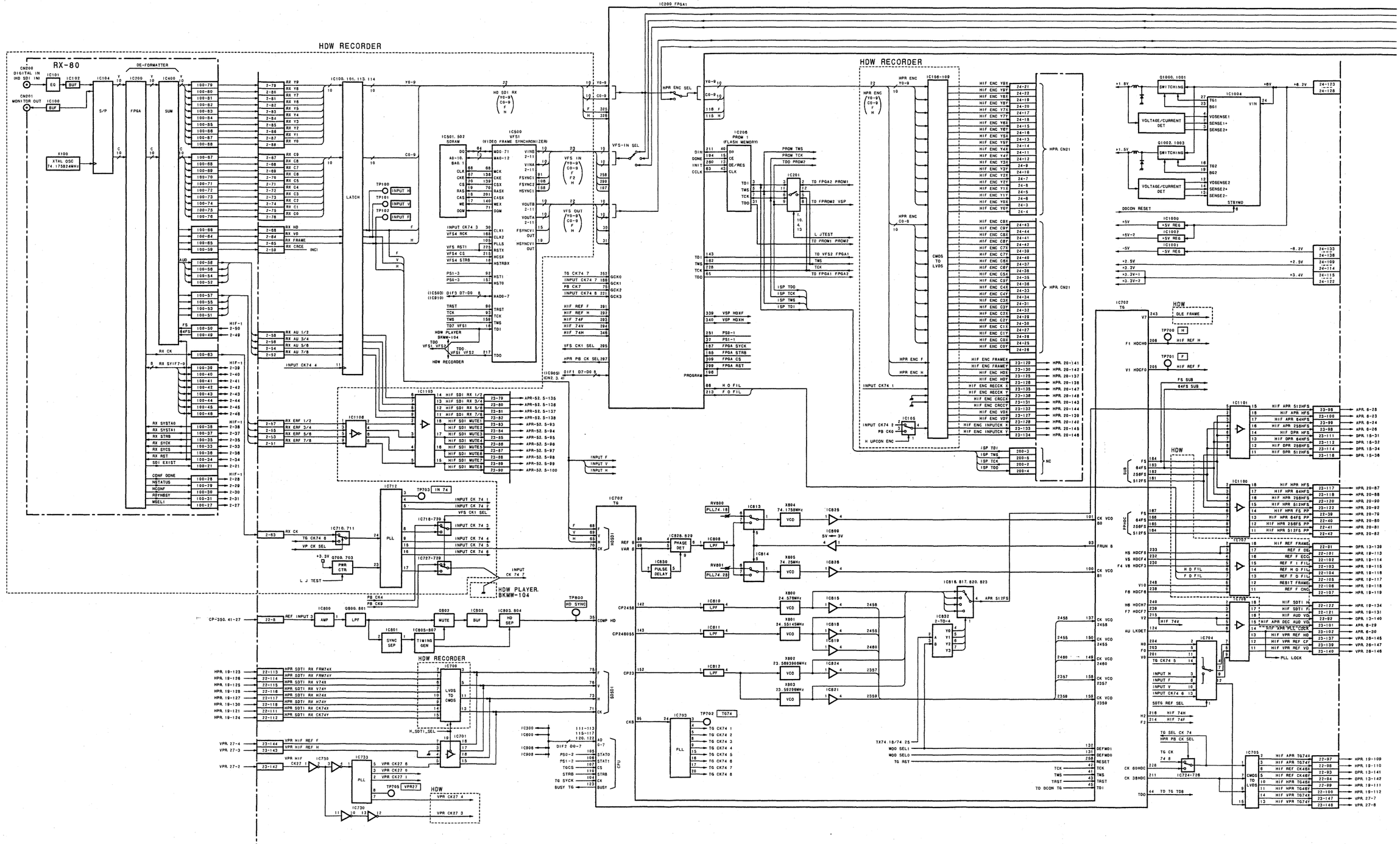

HIF-1 (1/2) HDW, BKMW-104 (for DVW, MSW)
SUFFIX: -24

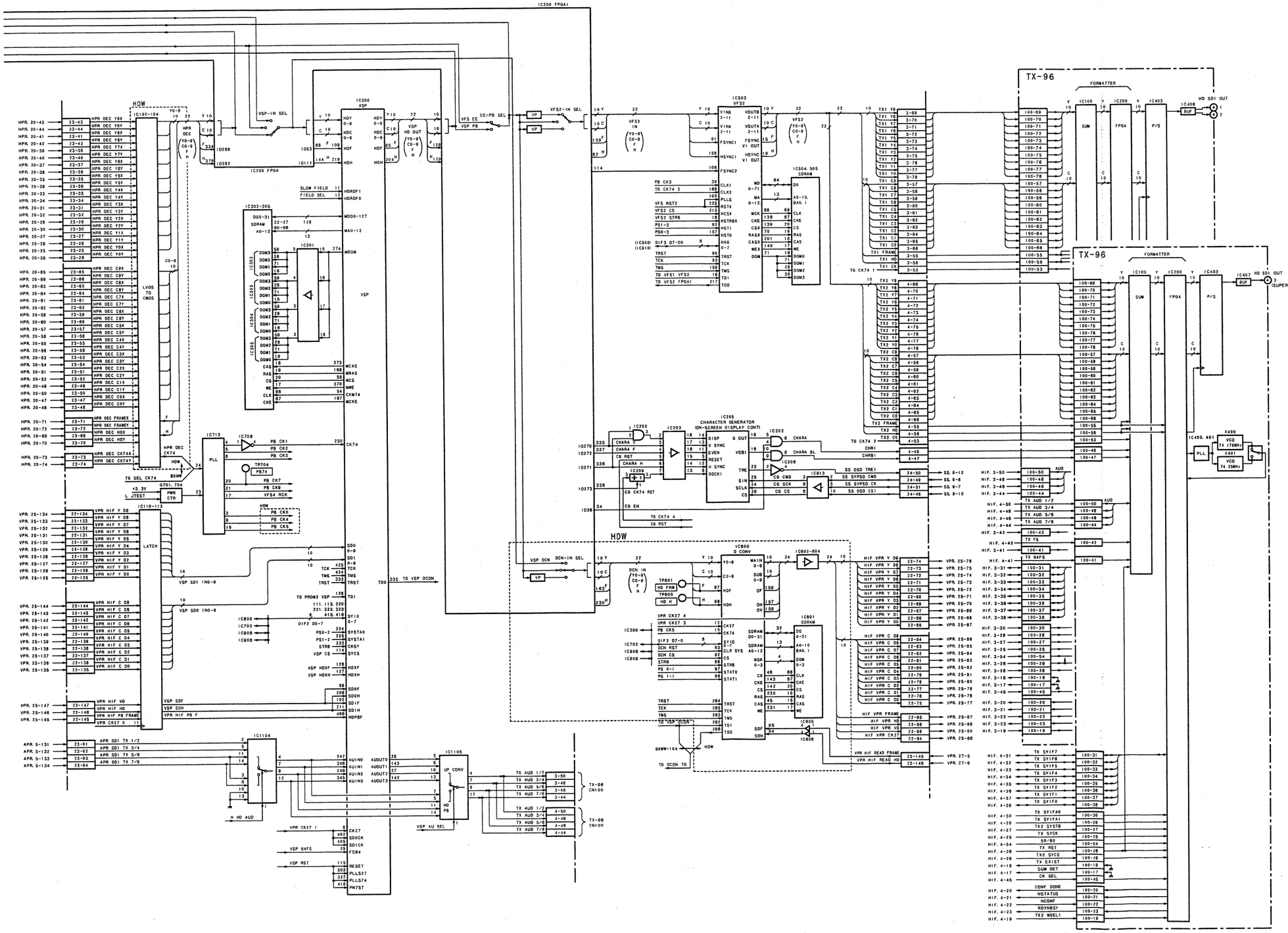

HIF-1 (1/2)

BOARD NO. 1-679-847-24

HIF-1: Lot No. 3C1- For HDW-2000, M2000/P
Lot No. 4C2- For HDW-D2000
Lot No. 462- For HDW-S2000/P
HIF-1A: Lot No. 3C1- For HDW-M2100/P, A2100
HIF-1B: Lot No. 3C1- For BKMW-104
(Option for DVW/MSW)

HIF-1 (2/2) HDW, BKMW-104 (for DVW, MSW) SUFFIX: -24

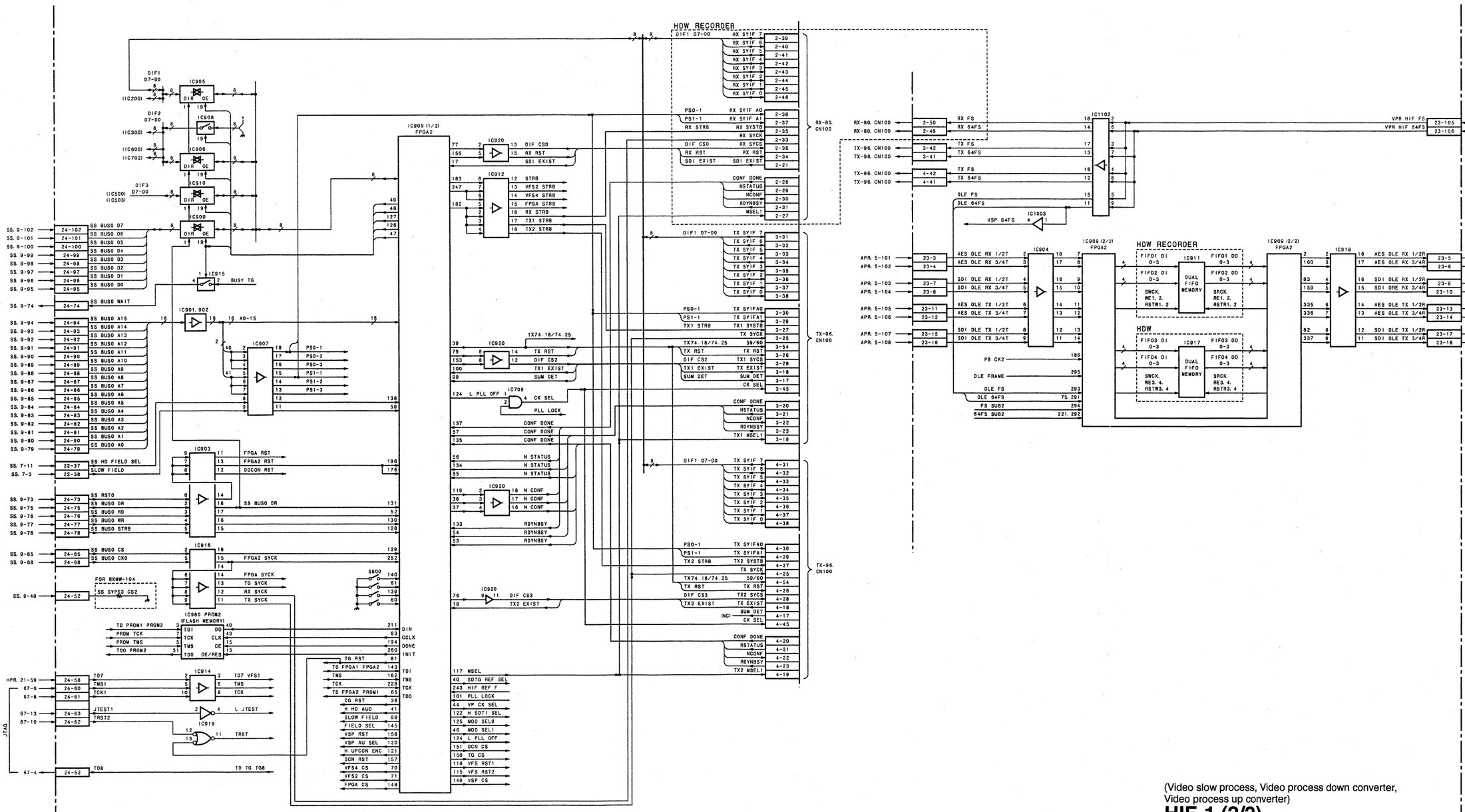

(Video slow process, Video process down converter, Video process up converter)

HIF-1 (2/2)

BOARD NO. 1-679-847-24

HIF-1: Lot No. 3C1- For HDW-2000, M2000/P
Lot No. 4C2- For HDW-D2000
Lot No. 462- For HDW-S2000/P
HIF-1A: Lot No. 3C1- For HDW-M2100/P, A2100
HIF-1B: Lot No. 3C1- For BKMW-104
(Option for DVW/MSW)

HIF-1 (1/2) HDW-2000/M/A, BKMW-104 (for DVW, MSW) SUFFIX: -22, 23

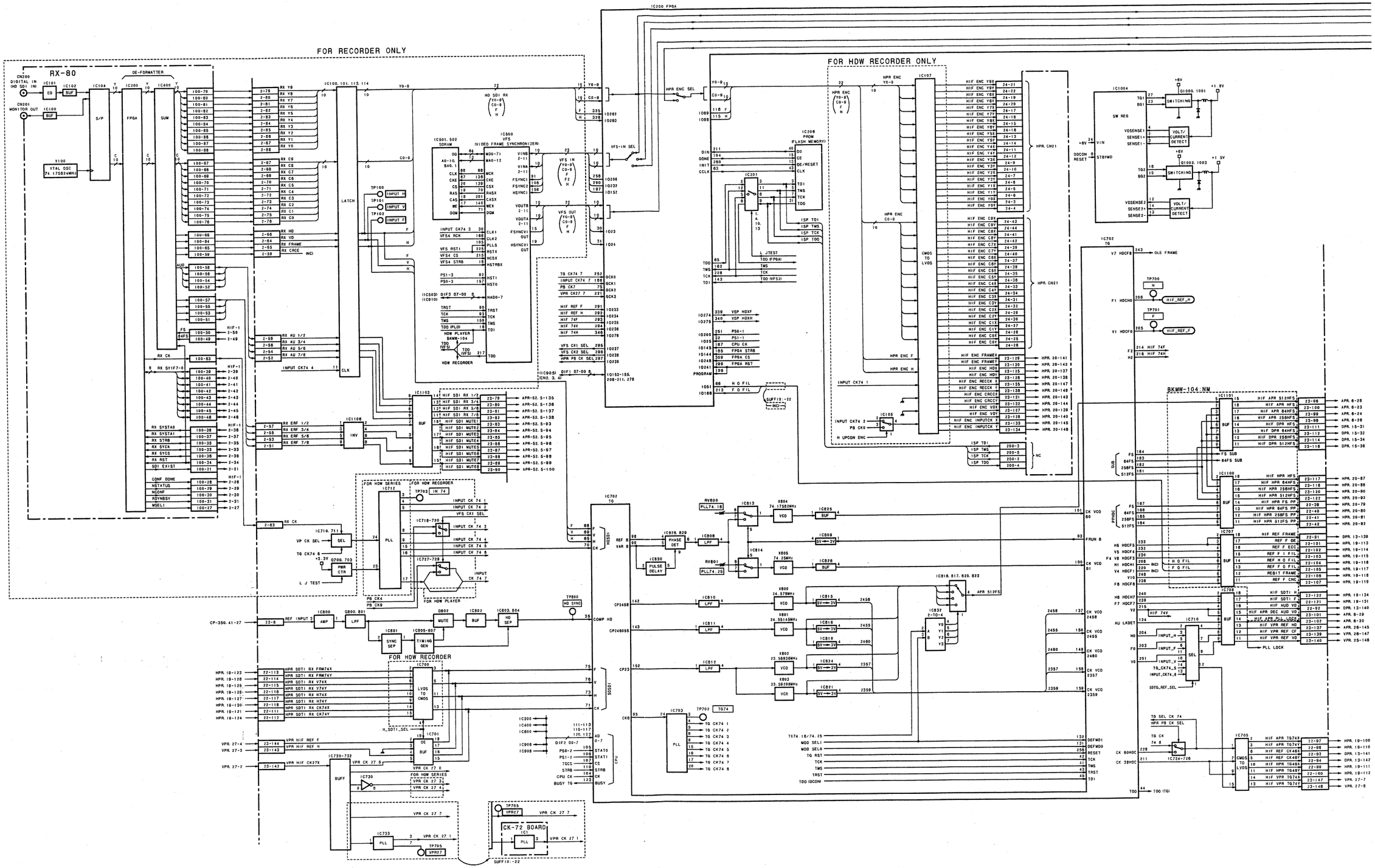

3-80 (b)

HIF-1 (1/2) HDW-2000/M/A, BKMW-104 (for DVW, MSW)
SUFFIX: -22, 23

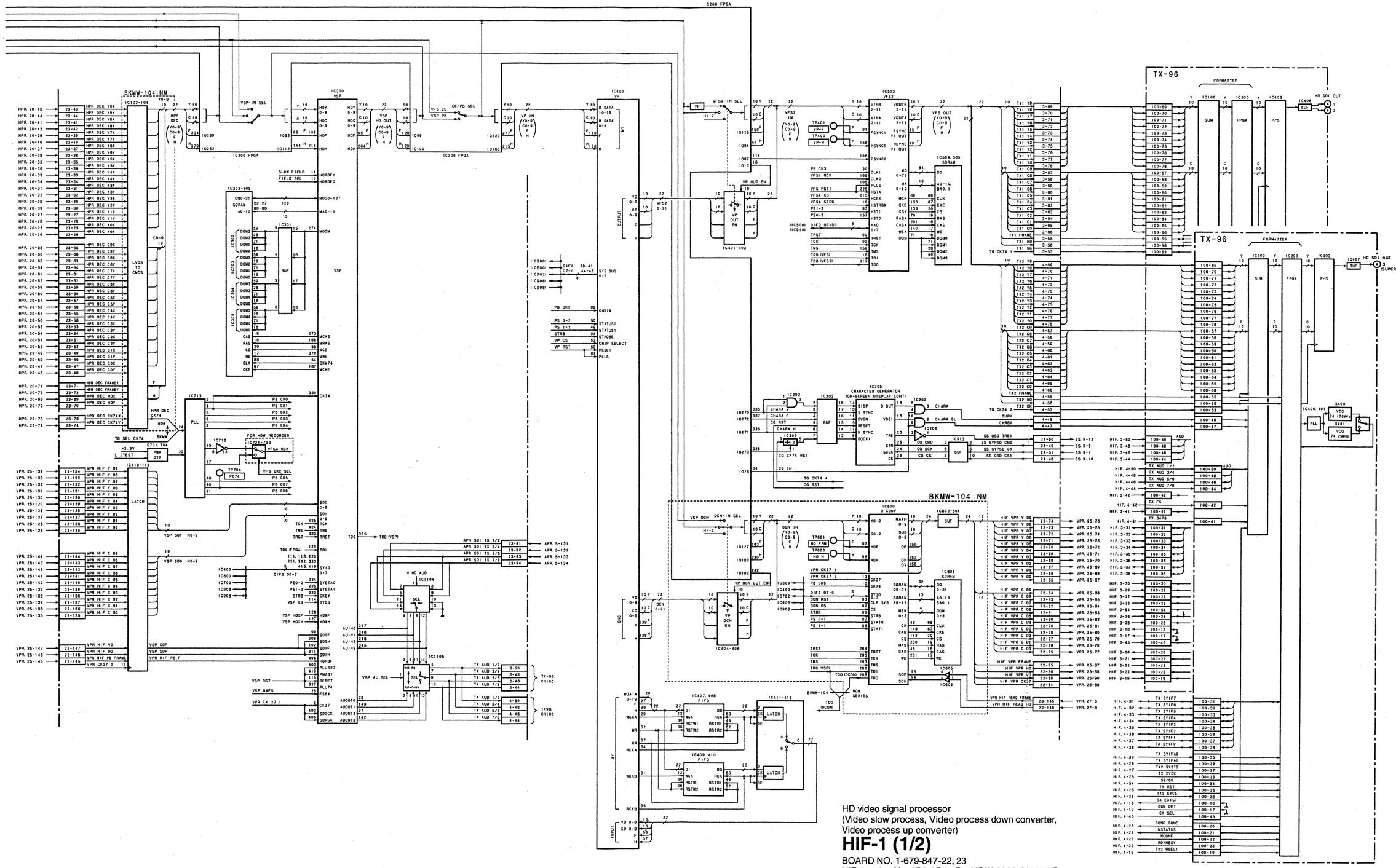

HD video signal processor
(Video slow process, Video process down converter,
Video process up converter)

HIF-1 (1/2)

BOARD NO. 1-679-847-22, 23
HIF-1: Lot No. 2B3-3B4 For HDW-2000, M2000/P
HIF-1A: Lot No. 2B3-3B4 For HDW-M2100/P, A2100
HIF-1B: Lot No. 2B3-3B4 For BKMW-104 (Option for DVW/MSW)

HIF-1 (2/2) HDW-2000/M/A, BKMW-104 (for DVW, MSW)
SUFFIX: -22, 23

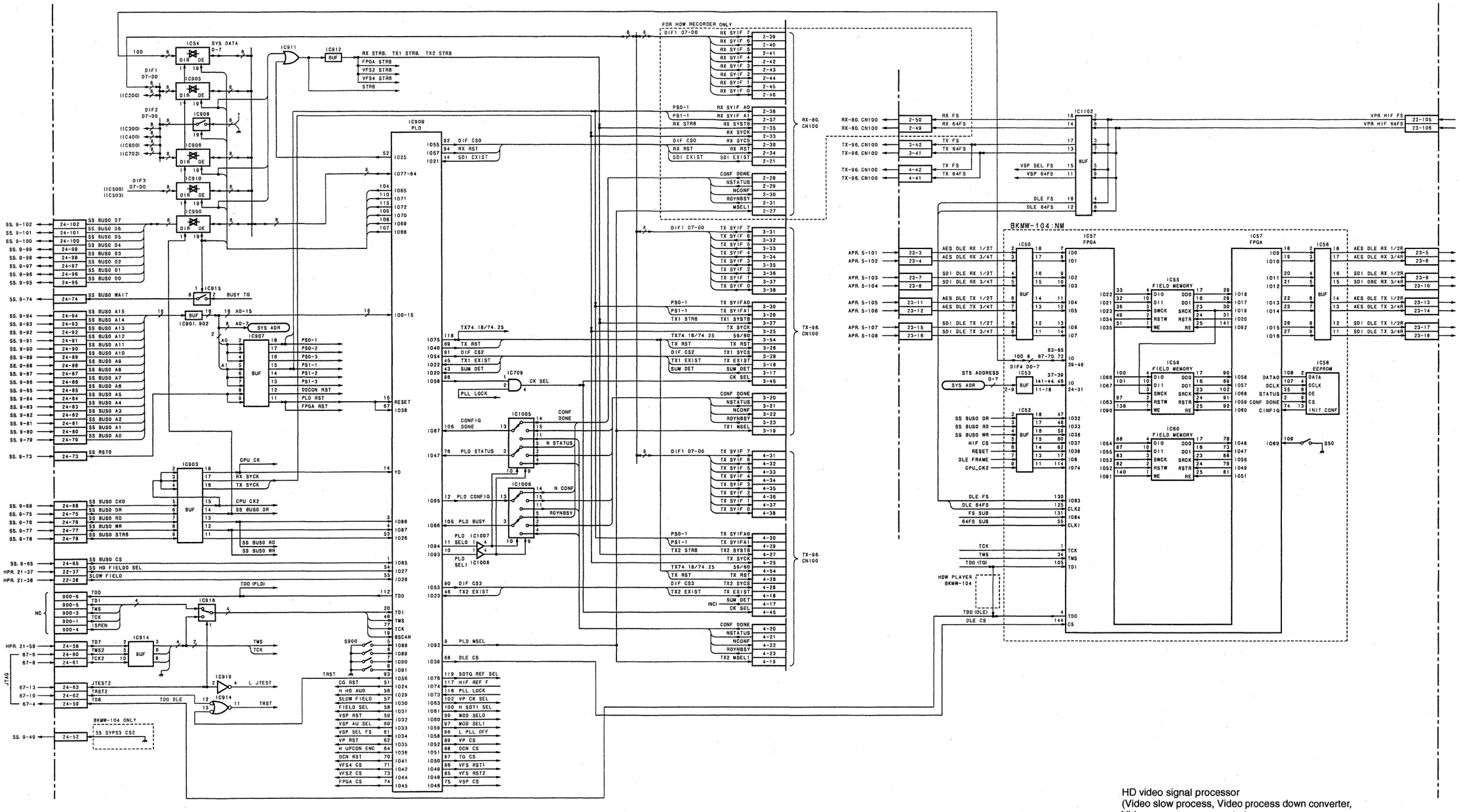

HD video signal processor
(Video slow process, Video process down converter,
Video process up converter)

HIF-1 (2/2)

BOARD NO. 1-679-847-22, 23
HIF-1: Lot No. 2B3-3B4 For HDW-2000, M2000/P
HIF-1A: Lot No. 2B3-3B4 For HDW-M2100/P, A2100
HIF-1B: Lot No. 2B3-3B4 For BKMW-104 (Option for DVW/MSW)

HIF-1 (1/2) HDW-2000/M/A
SUFFIX: -21

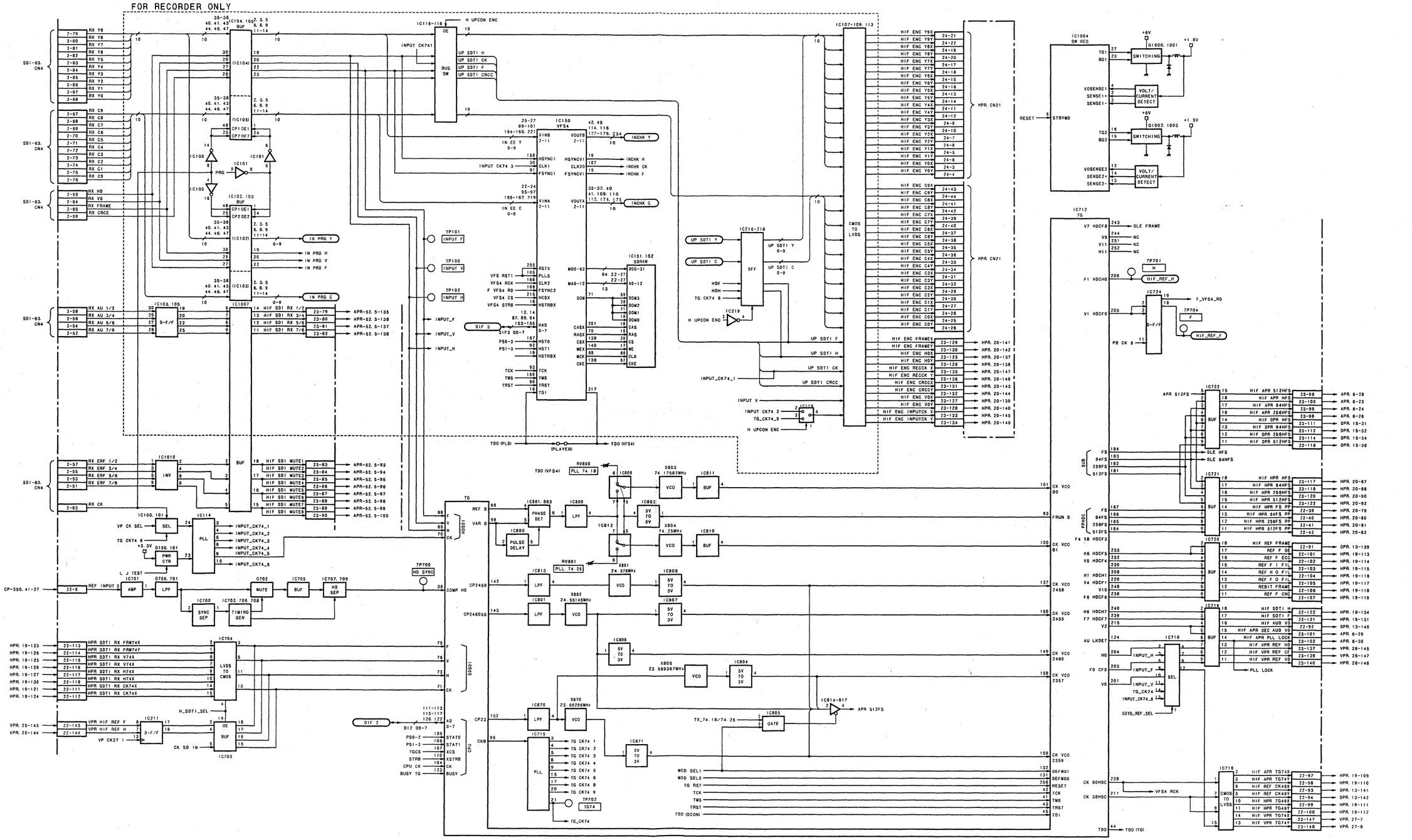

3-80 (a)

HIF-1 (1/2) HDW-2000/M/A SUFFIX: -21

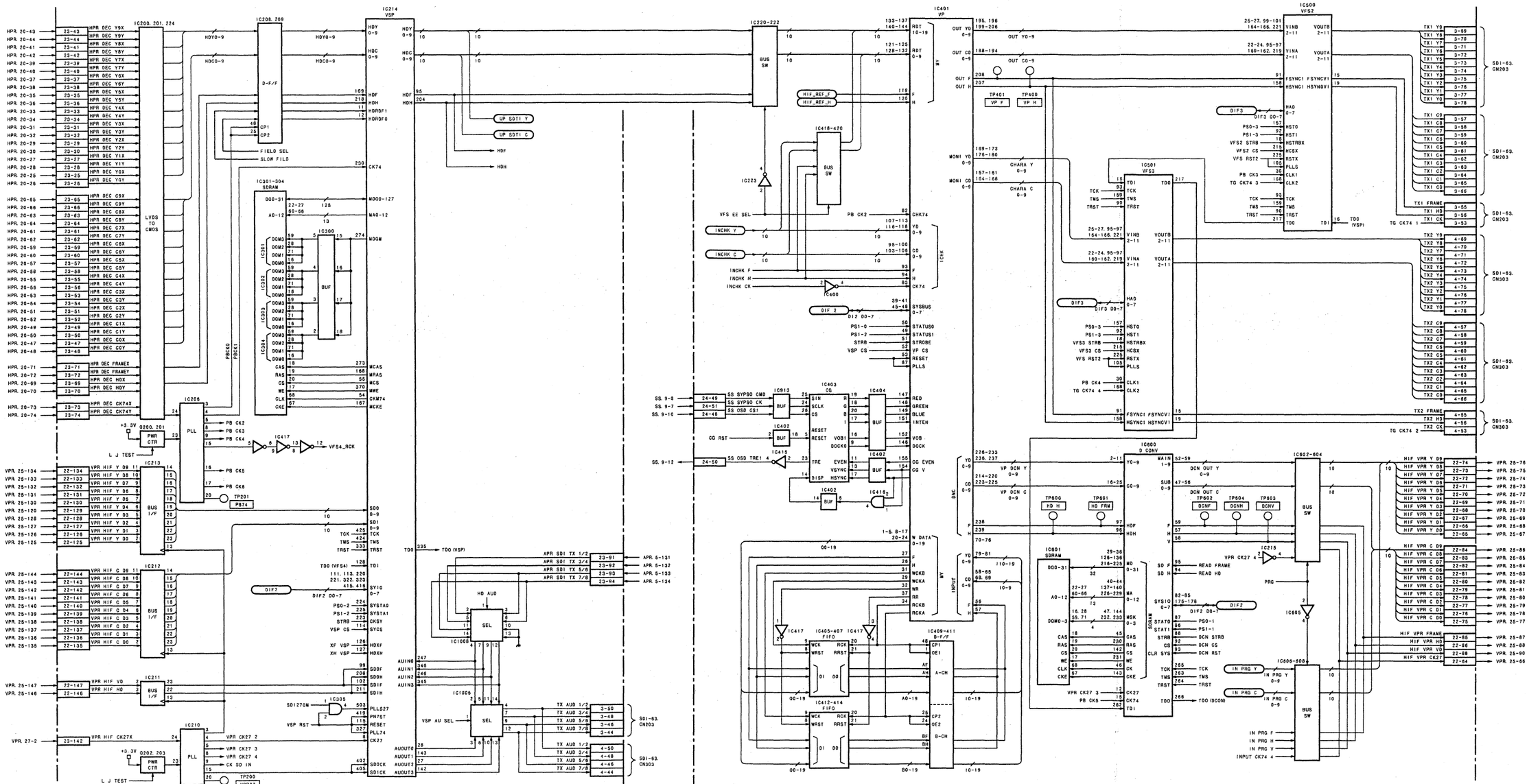

HD video signal processor
(Video slow process, Video process down converter, Video process up converter)

HIF-1 (1/2)

BOARD NO. 1-679-847-21
HIF-1: Lot No. 261-2B2 For HDW-2000, M2000/P
HIF-1A: Lot No. 261-2B2 For HDW-M2100/P, A2100

HIF-1 (2/2) HDW-2000/M/A
SUFFIX: -21

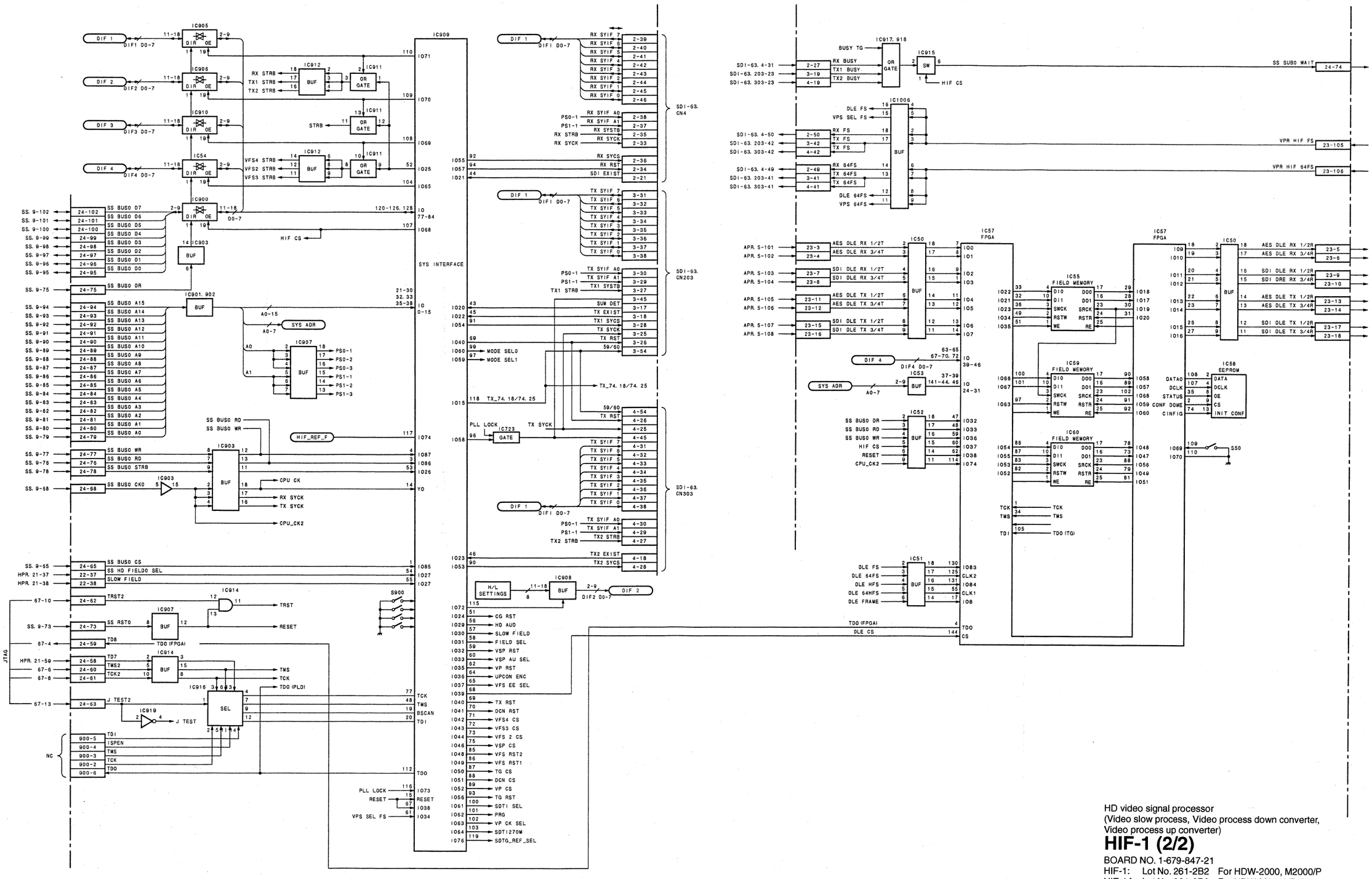

HD video signal processor
(Video slow process, Video process down converter, Video process up converter)

HIF-1 (2/2)

BOARD NO. 1-679-847-21
HIF-1: Lot No. 261-2B2 For HDW-2000, M2000/P
HIF-1A: Lot No. 261-2B2 For HDW-M2100/P, A2100

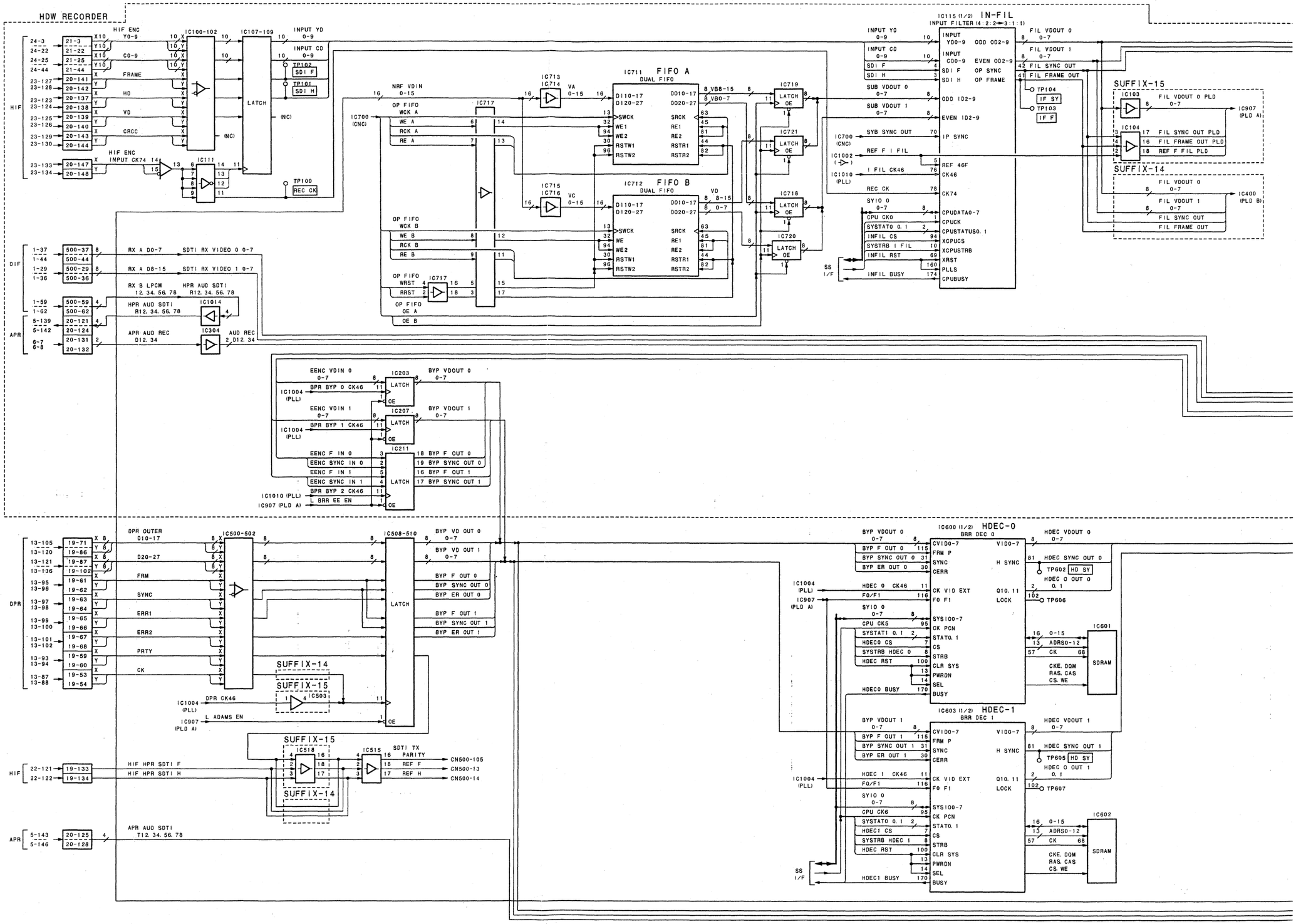
HDW RECORDER
HIF
DIF
APR
DPR
SS I/F
HIF ENC Y0-9
HIF ENC INPUT CK74
IC100-102
IC107-109
IC111
LATCH
INPUT YD 0-9
INPUT CD 0-9
TP102 SDI F
TP101 SDI H
TP100 REC CK
C0-9
FRAME
HD
VD
CRCC
(INC)
NRF VDIN 0-15
OP FIFO WCK A
WE A
RCK A
RE A
OP FIFO WCK B
WE B
RCK B
RE B
OP FIFO WRST
ARST
OP FIFO OE A
OE B
IC700 (CNC)
IC713 IC714 VA 0-15
IC715 IC716 VC 0-15
IC711 FIFO A
IC712 FIFO B
DUAL FIFO
VD 8-15
VD 0-7
IC719
IC721
IC718
IC720
LATCH
OE
RX A D0-7
SDTI RX VIDEO 0 0-7
RX A D8-15
SDTI RX VIDEO 1 0-7
RX B LPCM 12. 34. 56. 78
HPR AUD SDTI R12. 34. 56. 78
IC1014
HPR AUD SDTI R12. 34. 56. 78
APR AUD REC D12. 34
IC304
AUD REC 2 D12. 34
IC1115 (1/2) IN-FIL
INPUT FILTER (4:2:2→3:1:1)
INPUT YD 0-9
INPUT CD 0-9
SDI F
SDI H
SUB VDOUT 0 0-7
SUB VDOUT 1 0-7
SYB SYNC OUT
IP SYNC
REF F I FIL
I FIL CK46
REC CK
SYIO 0 0-7
CPU CK0
SYSTAT0 0. 1
INFIL CS
SYSTRB I FIL
INFIL RST
INFIL BUSY
INPUT YD0-9 ODD OD2-9
INPUT CD0-9 EVEN OD2-9
SDI F OP SYNC
SDI H OP FRAME
ODD ID2-9
EVEN ID2-9
IP SYNC
REF 46F
CK46
CK74
CPUDATA0-7
CPUCK
CPUSTATUS0. 1
XCPUCS
XCPUSTRB
XRST
PLLS
CPUBUSY
FIL VDOUT 0 0-7
FIL VDOUT 1 0-7
FIL SYNC OUT
FIL FRAME OUT
TP104 IF SY
TP103 IF F
SUFFIX-15
IC103
FIL VDOUT 0 PLD
IC907 (PLD A)
IC104
FIL SYNC OUT PLD
FIL FRAME OUT PLD
REF F FIL PLD
SUFFIX-14
IC400 (PLD B)
EENC VDIN 0 0-7
BPR BYP 0 CK46
IC1004 (PLL)
IC203
BYP VDOUT 0 0-7
EENC VDIN 1 0-7
BPR BYP 1 CK46
IC207
BYP VDOUT 1 0-7
IC211
EENC F IN 0
EENC SYNC IN 0
EENC F IN 1
EENC SYNC IN 1
BPR BYP 2 CK46
L BRR EE EN
IC1010 (PLL)
IC907 (PLD A)
BYP F OUT 0
BYP SYNC OUT 0
BYP ER OUT 0
BYP F OUT 1
BYP SYNC OUT 1
BYP ER OUT 1
DPR OUTER D10-17
D20-27
FRM
SYNC
ERR1
ERR2
PRTY
CK
IC500-502
IC508-510
BYP VD OUT 0 0-7
BYP VD OUT 1 0-7
DPR CK46
L ADAMS EN
IC503
IC518
IC515
SDTI TX
PARITY
REF F
REF H
HIF HPR SDTI F
HIF HPR SDTI H
CN500-105
CN500-13
CN500-14
APR AUD SDTI T12. 34. 56. 78
IC600 (1/2) HDEC-0
BRR DEC 0
IC603 (1/2) HDEC-1
BRR DEC 1
CVID0-7
FRM P
SYNC
CERR
CK VID EXT
FO F1
VID0-7
H SYNC
Q10. 11
LOCK
HDEC VDOUT 0 0-7
HDEC SYNC OUT 0
TP602 HD SY
HDEC O OUT 0 0. 1
TP606
HDEC VDOUT 1 0-7
HDEC SYNC OUT 1
TP605 HD SY
HDEC O OUT 1 0. 1
TP607
HDEC 0 CK46
FO/F1
SYIO 0 0-7
CPU CK5
SYSTAT1 0. 1
HDEC0 CS
SYSTRB HDEC 0
HDEC RST
HDEC0 BUSY
SYS100-7
CK PCN
STAT0. 1
CS
STRB
CLR SYS
PWRDN
SEL
BUSY
HDEC 1 CK46
CPU CK6
SYSTAT0 0. 1
HDEC1 CS
SYSTRB HDEC 1
HDEC1 BUSY
IC601
IC602
SDRAM
ADRS0-12
CK
CKE, DQM
RAS, CAS
CS, WE

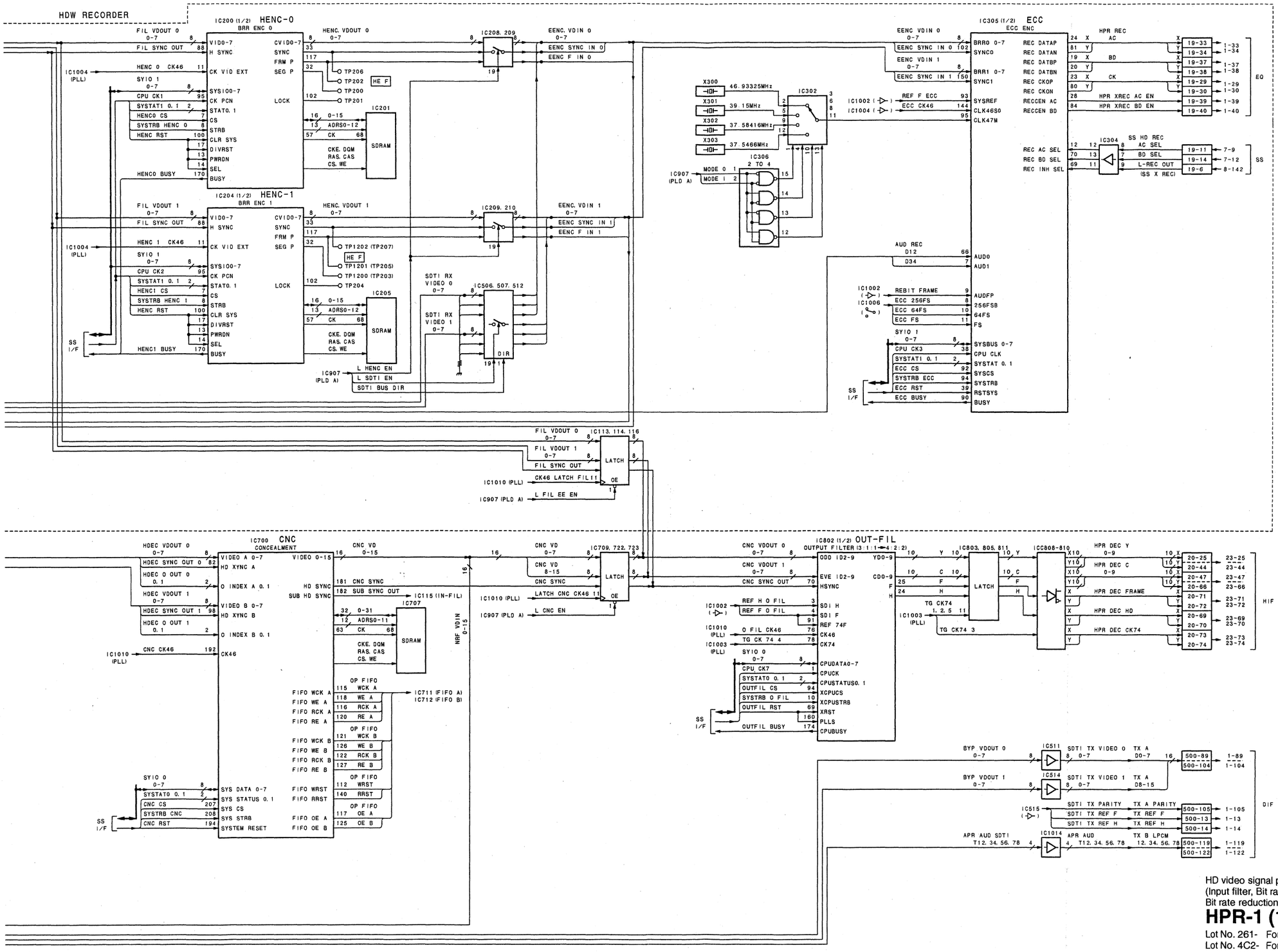

HD video signal processor
(Input filter, Bit rate reduction encoder, ECC encoder,
Bit rate reduction decoder, Concealment, Output filter)

HPR-1 (1/2)

Lot No. 261- For HDW-2000, M2000/P, M2100/P, A2100
Lot No. 4C2- For HDW-D2000
Lot No. 462- For HDW-S2000/P

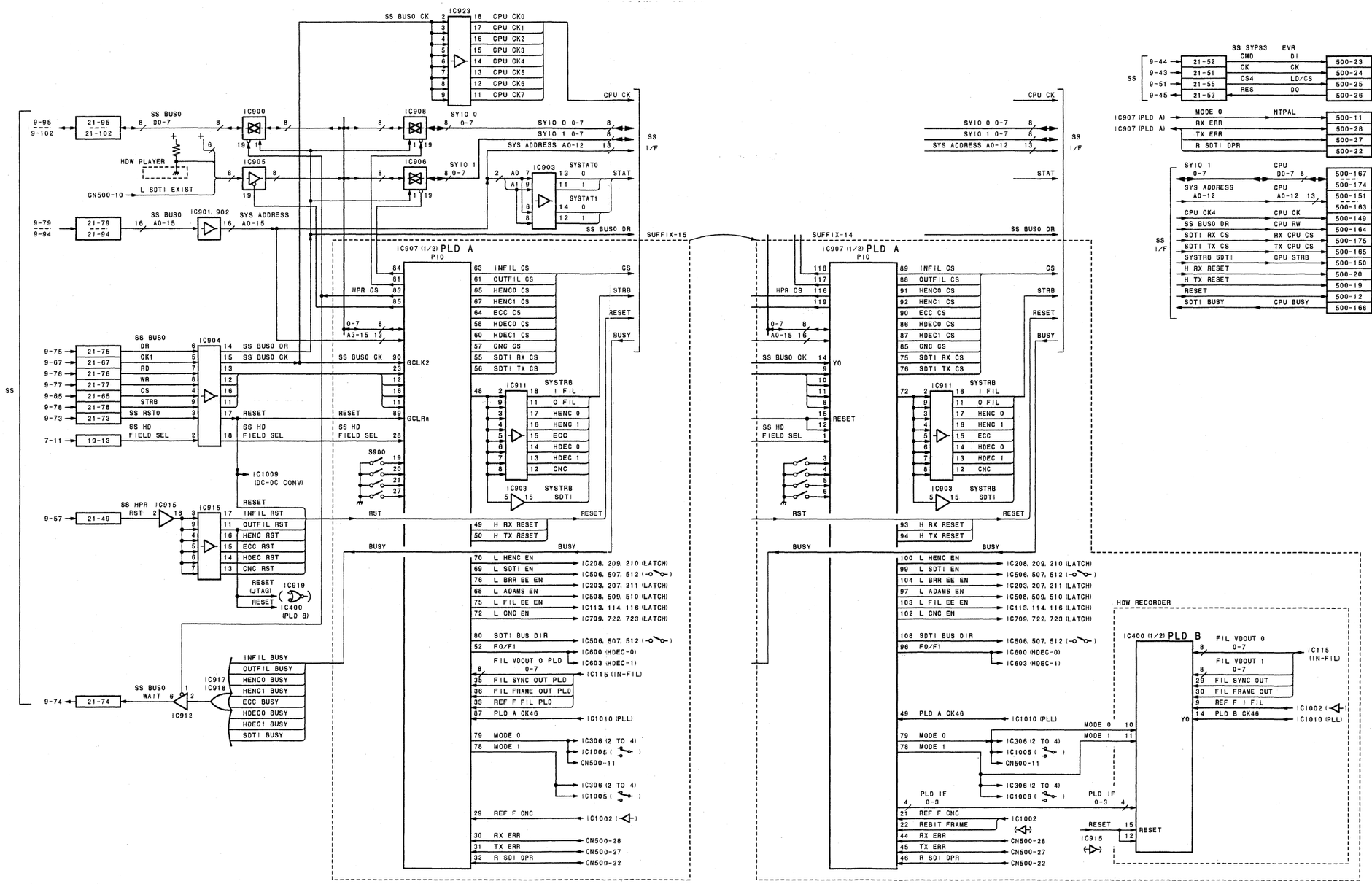
IC923
IC900
IC908
IC905
IC906
IC903
IC901, 902
IC904
IC915
IC917
IC918
IC912
IC907 (1/2) PLD A
IC911
IC903
IC1009 (DC-DC CONV)
IC919
IC400 (PLD B)
IC400 (1/2) PLD B
HDW RECORDER
HDW PLAYER
L SDTI EXIST
CN500-10
SS BUSO
SYIO 0
SYIO 1
SYSTAT0
SYSTAT1
SYSTRB
SYSTRB SDTI
SS SYPS3
EVR
SUFFIX-15
SUFFIX-14
SS I/F
DIF
SS
HPR CS
RESET
BUSY
RST
CS
STRB
STAT
CPU CK
SS BUSO DR
SS BUSO CK
SS HD FIELD SEL
SS HPR RST
SS BUSO WAIT
INFIL CS
OUTFIL CS
HENC0 CS
HENC1 CS
ECC CS
HDEC0 CS
HDEC1 CS
CNC CS
SDTI RX CS
SDTI TX CS
INFIL RST
OUTFIL RST
HENC RST
ECC RST
HDEC RST
CNC RST
INFIL BUSY
OUTFIL BUSY
HENC0 BUSY
HENC1 BUSY
ECC BUSY
HDEC0 BUSY
HDEC1 BUSY
SDTI BUSY
H RX RESET
H TX RESET
L HENC EN
L SDTI EN
L BRR EE EN
L ADAMS EN
L FIL EE EN
L CNC EN
SDTI BUS DIR
F0/F1
FIL VDOUT 0 PLD
FIL SYNC OUT PLD
FIL FRAME OUT PLD
REF F FIL PLD
PLD A CK46
MODE 0
MODE 1
REF F CNC
RX ERR
TX ERR
R SDI DPR
REBIT FRAME
FIL VDOUT 0
FIL VDOUT 1
FIL SYNC OUT
FIL FRAME OUT
REF F I FIL
PLD B CK46
PLD IF
IC1010 (PLL)
IC1002
IC115 (IN-FIL)
IC306 (2 TO 4)
IC1005
IC1006
CN500-11
CN500-28
CN500-27
CN500-22
IC208, 209, 210 (LATCH)
IC506, 507, 512
IC203, 207, 211 (LATCH)
IC508, 509, 510 (LATCH)
IC113, 114, 116 (LATCH)
IC709, 722, 723 (LATCH)
IC600 (HDEC-0)
IC603 (HDEC-1)
IC1010 (PLL)
IC1002
IC915
IC1009
IC900
IC905
IC906
IC908
IC901, 902
IC903
IC904
IC911
IC915
IC917
IC918
IC919
IC923
IC907 (1/2) PLD A
IC400 (1/2) PLD B
S900
CPU CK0
CPU CK1
CPU CK2
CPU CK3
CPU CK4
CPU CK5
CPU CK6
CPU CK7
SYSTAT0
SYSTAT1
SYSTRB
SYSTRB SDTI
SS SYPS3
EVR
MODE 0
NTPAL
RX ERR
TX ERR
R SDTI DPR
SYIO 1
SYS ADDRESS
CPU CK4
SS BUSO DR
SDTI RX CS
SDTI TX CS
SYSTRB SDTI
H RX RESET
H TX RESET
RESET
SDTI BUSY
CPU BUSY
CPU CK
CPU RW
RX CPU CS
TX CPU CS
CPU STRB
CPU BUSY
SS BUSO CK
SS BUSO DR
SS HD FIELD SEL
SS HPR RST
SS BUSO WAIT
SS RST0
SS BUSO WAIT
HPR CS
GCLK2
GCLRn
RESET
BUSY
RST
CS
STRB
STAT
SS I/F
SS
DIF

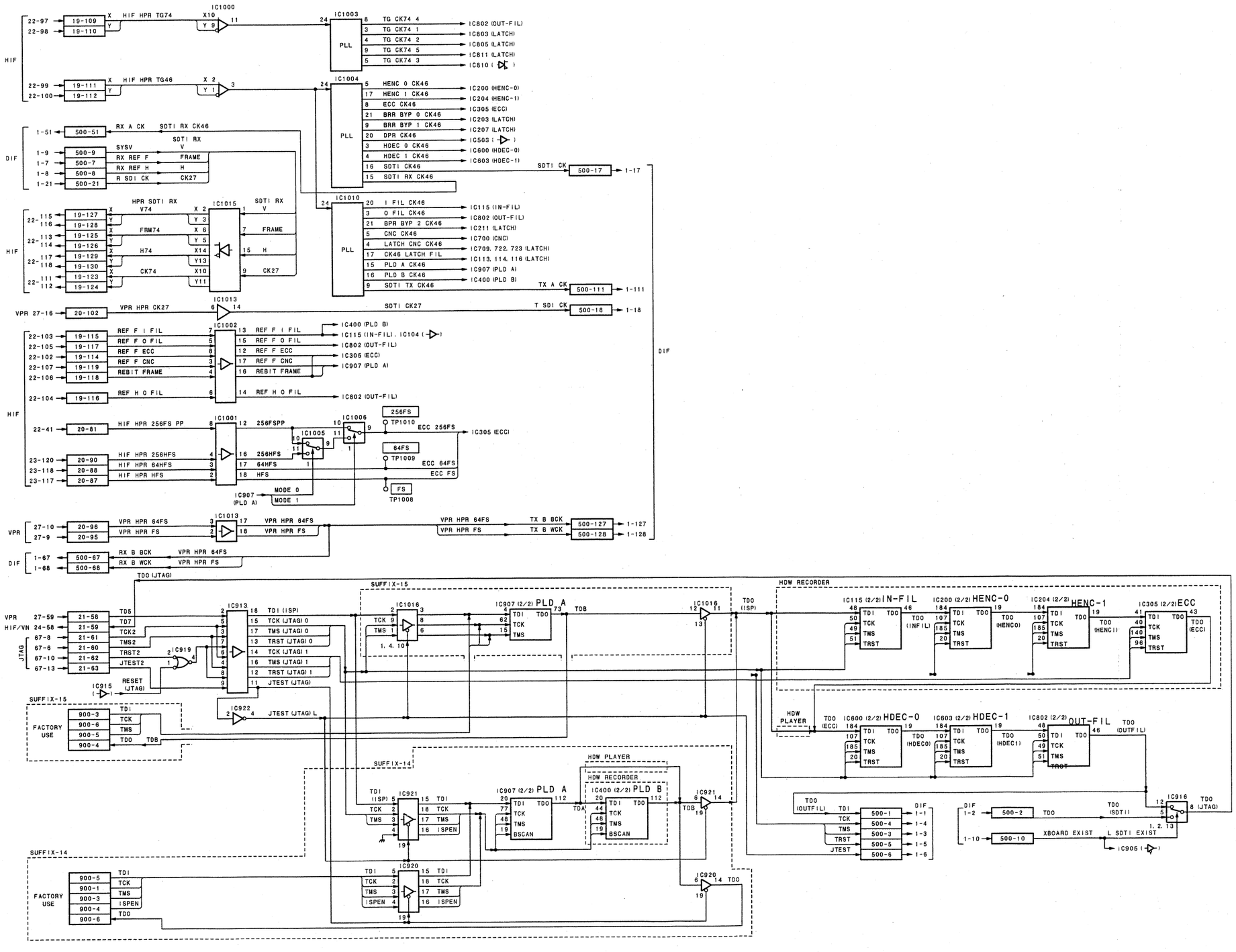

HD video signal processor
(Input filter, Bit rate reduction encoder, ECC encoder,
Bit rate reduction decoder, Concealment, Output filter)

HPR-1 (2/2)

Lot No. 261- For HDW-2000, M2000/P, M2100/P, A2100
Lot No. 4C2- For HDW-D2000
Lot No. 462- For HDW-S2000/P

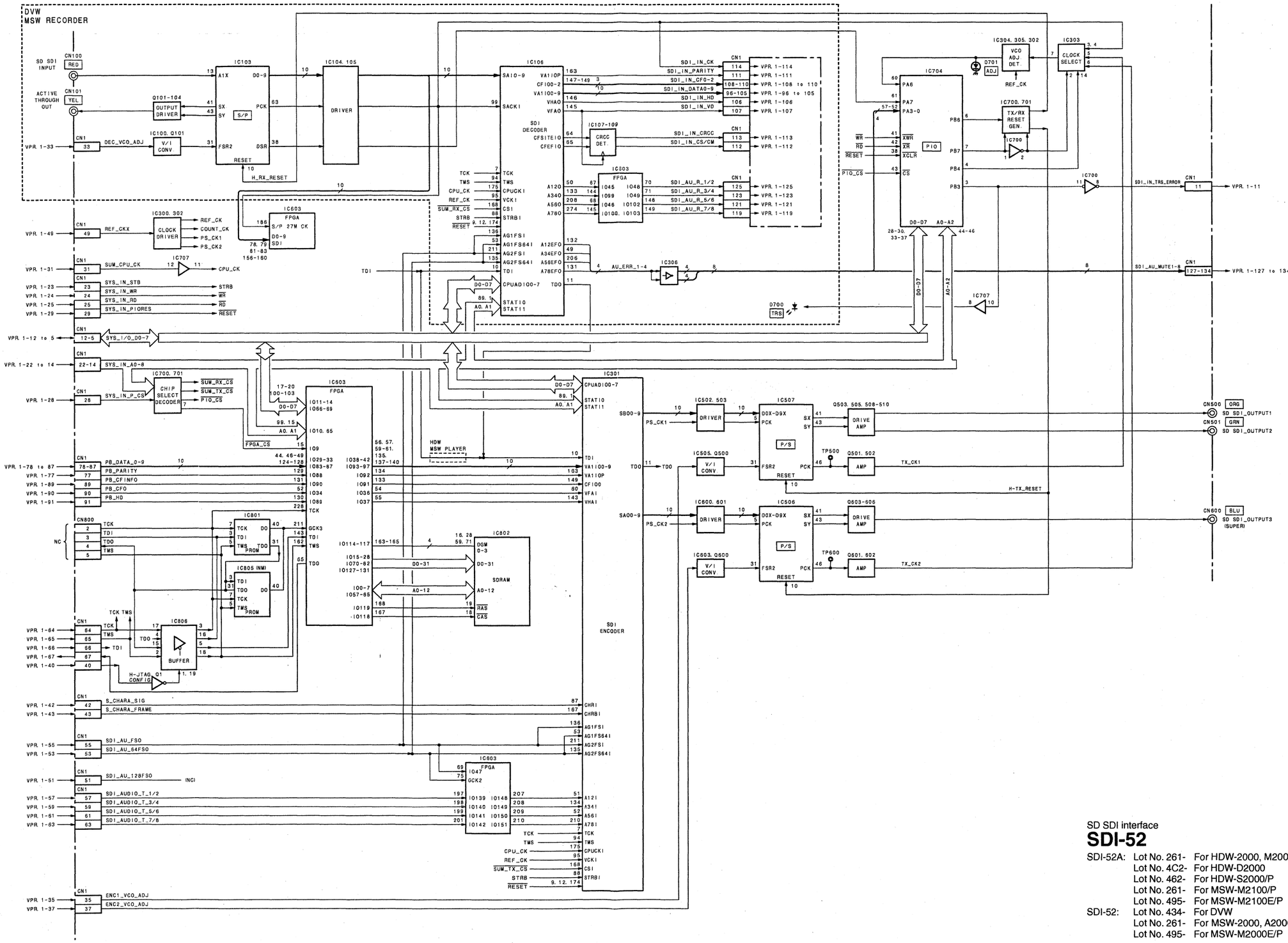

SD SDI interface

SDI-52

SDI-52A: Lot No. 261- For HDW-2000, M2000/P, M2100/P, A2100
Lot No. 4C2- For HDW-D2000
Lot No. 462- For HDW-S2000/P
Lot No. 261- For MSW-M2100/P
Lot No. 495- For MSW-M2100E/P

SDI-52: Lot No. 434- For DVW
Lot No. 261- For MSW-2000, A2000/P, M2000/P
Lot No. 495- For MSW-M2000E/P

HDW-2000, M2000/P

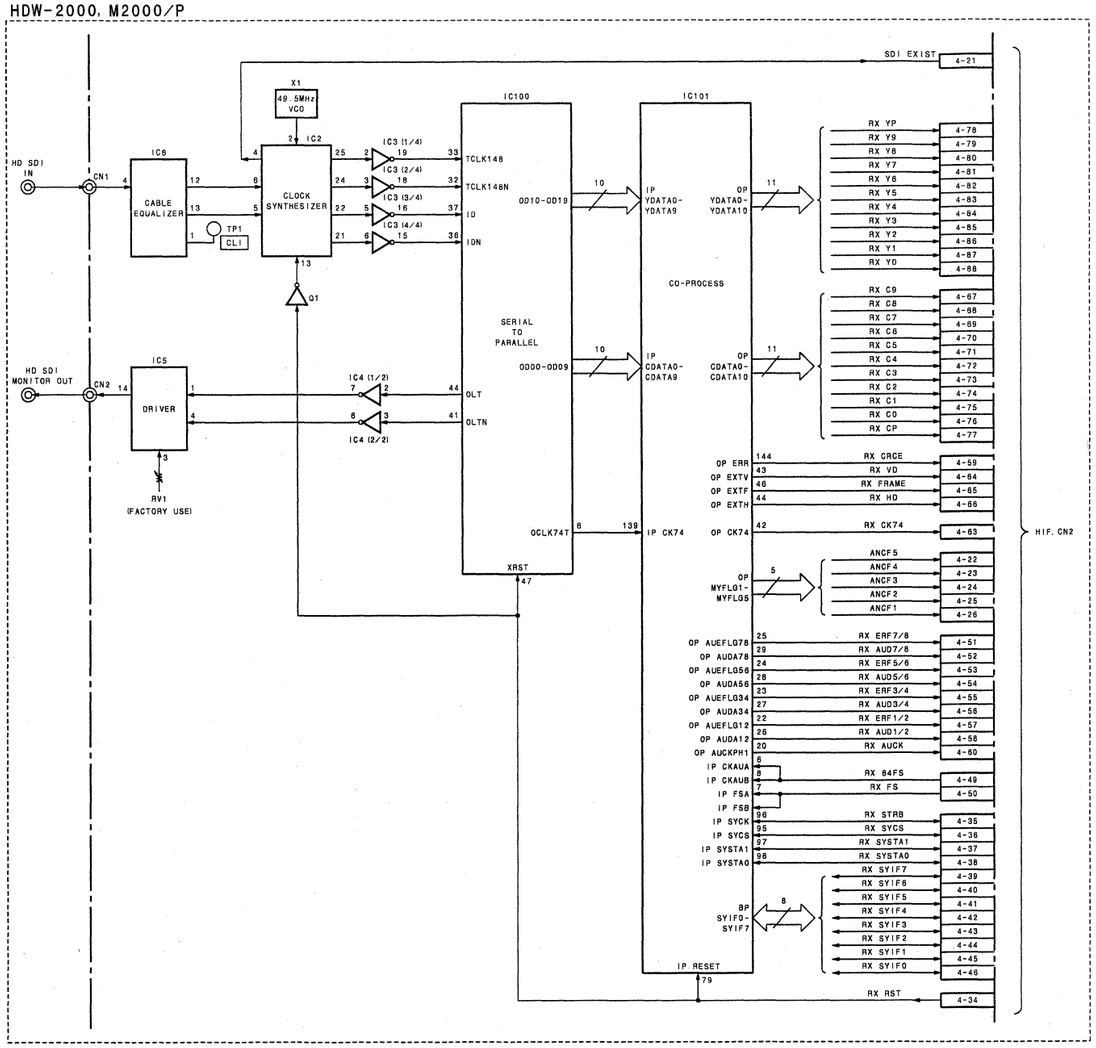

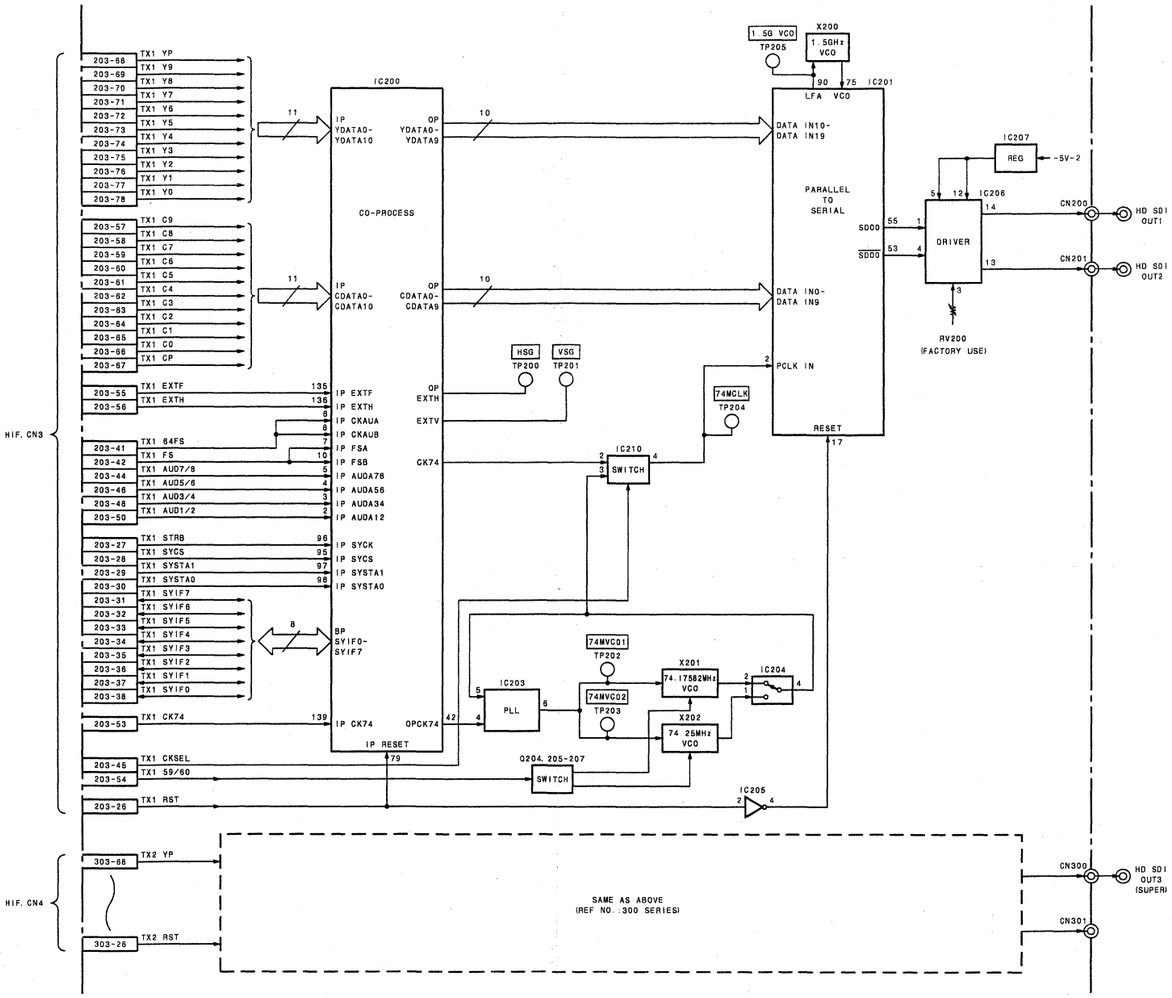

HD SDI interface

SDI-63

SDI-63 Lot No. 261-2B2 For HDW-2000, M2000/P
SDI-63A Lot No. 261-2B2 For HDW-M2100/P, A2100

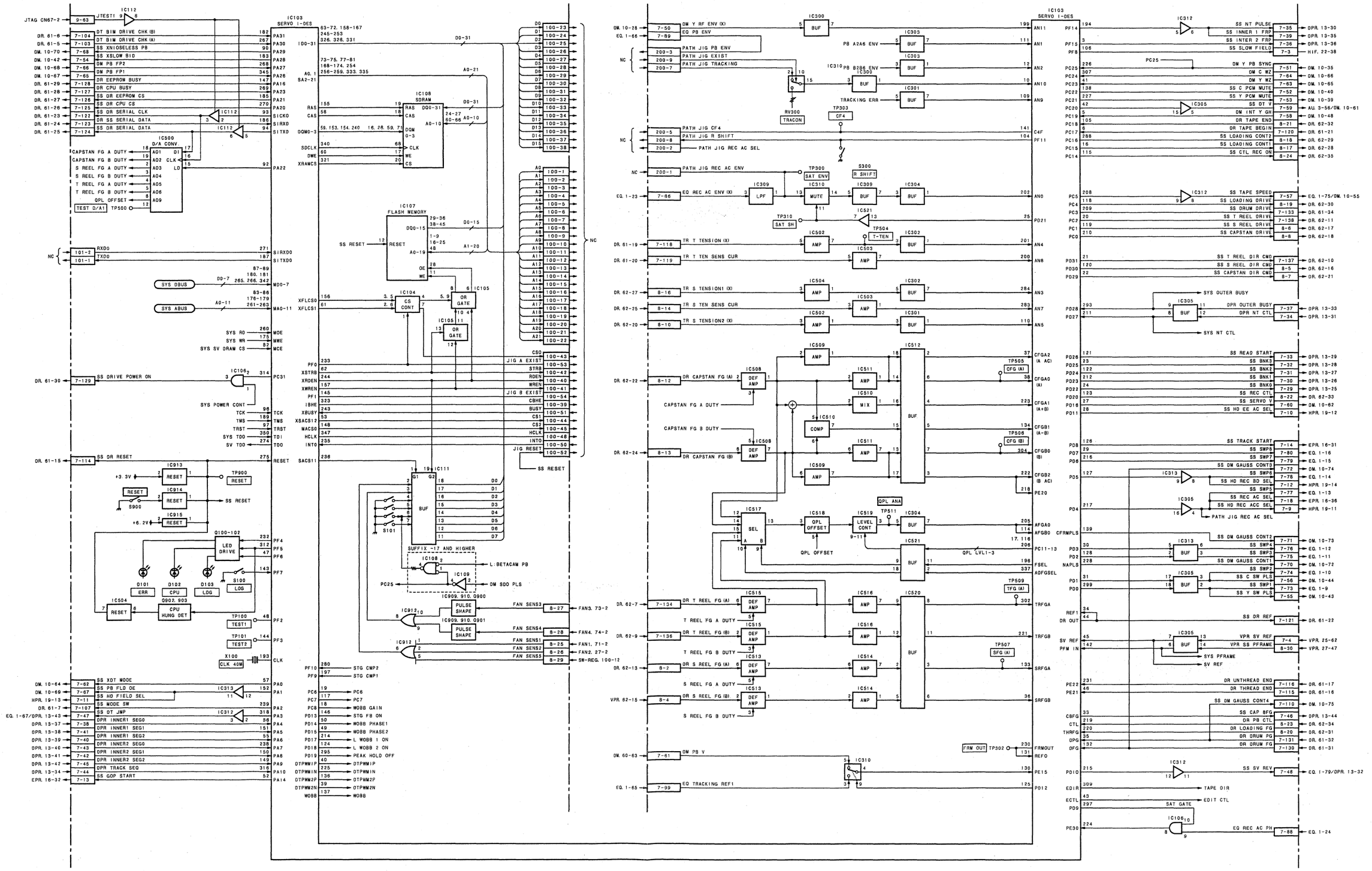

System control, Servo control

SS-89 (1/3)

HDW series, DVW series, MSW series

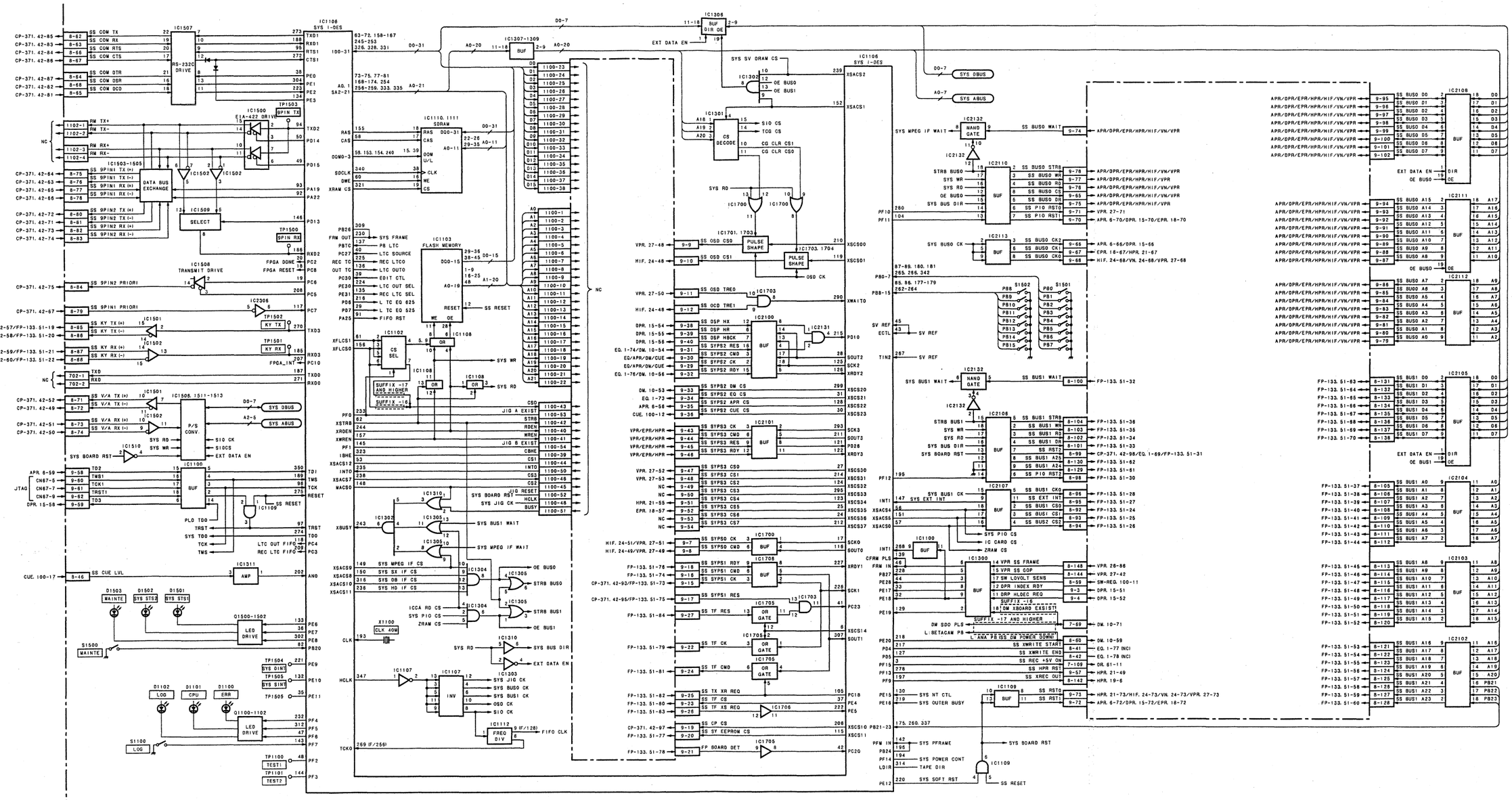
IC1507
RS-232C DRIVE
IC1500
EIA-422 DRIVE
IC1502
IC1509
SELECT
IC1508
TRANSMIT DRIVE
IC1306
IC1307-1309
IC1106
SYS I-OES
IC1110, 1111
SDRAM
IC1103
FLASH MEMORY
IC1102
CS SEL
IC1100
IC1301
CS DECODE
IC1302
IC1700
IC1701, 1703
PULSE SHAPE
IC1703, 1704
PULSE SHAPE
IC2100
IC2101
IC2102
IC2132
NAND GATE
IC2110
IC2113
IC2106
IC2107
IC1300
IC2108
IC2111
IC2112
IC2105
IC2104
IC2103
IC2102
IC1310
IC1305
IC1304
IC1311
AMP
IC1107
IC1303
IC1112
FREQ DIV
IC1705
IC1706
IC1109
SS RESET
SYS BOARD RST
SYS SV DRAM CS
SYS SBUS
SYS ABUS
EXT DATA EN
SYS RD
SYS WR
SYS JIG CK
SYS BUS1 WAIT
SYS MPEG IF WAIT
SYS BUS DIR
SYS SBUS CK
SYS SBUS CK2
SYS PIO CS
I/C CARD CS
ZRAM CS
SYS PFRAME
SYS POWER CONT
TAPE DIR
SYS SOFT RST
SYS NT CTL
SYS OUTER BUSY
SYS SBUS WAIT
SYS BUS1 WAIT
SYS EXT INT
SYS MPEG I/F WAIT
SS RSTO
SS RST1
SS RST2
SS PIO RST2
SS BUS1 CK
SS BUS1 CKO
SS BUS1 CS0
SS BUS2 CS2
SS BUS1 A25
SS BUS1 A24
SS BUS1 DR
SS BUS1 WR
SS BUS1 RQ
SS BUS1 STRB
SS BUS0 CK2
SS BUS0 CK1
SS BUS0 CK0
SS BUS0 STRB
SS BUS0 WR
SS BUS0 RQ
SS BUS0 CS
SS BUS0 DR
SS PIO RST0
SS PIO RST1
SS BUS0 WAIT
SS BUS1 WAIT
SS BUS0 A15
SS BUS0 A14
SS BUS0 A13
SS BUS0 A12
SS BUS0 A11
SS BUS0 A10
SS BUS0 A9
SS BUS0 A8
SS BUS0 A7
SS BUS0 A6
SS BUS0 A5
SS BUS0 A4
SS BUS0 A3
SS BUS0 A2
SS BUS0 A1
SS BUS0 A0
SS BUS1 A15
SS BUS1 A14
SS BUS1 A13
SS BUS1 A12
SS BUS1 A11
SS BUS1 A10
SS BUS1 A9
SS BUS1 A8
SS BUS1 A7
SS BUS1 A6
SS BUS1 A5
SS BUS1 A4
SS BUS1 A3
SS BUS1 A2
SS BUS1 A1
SS BUS1 A0
SS BUS1 D0
SS BUS1 D1
SS BUS1 D2
SS BUS1 D3
SS BUS1 D4
SS BUS1 D5
SS BUS1 D6
SS BUS1 D7
SS 9PIN1 TX (+)
SS 9PIN1 TX (-)
SS 9PIN1 RX (+)
SS 9PIN1 RX (-)
SS 9PIN2 TX (+)
SS 9PIN2 TX (-)
SS 9PIN2 RX (+)
SS 9PIN2 RX (-)
SS 9PIN2 PRIORI
SS 9PIN1 PRIORI
SS KY TX (+)
SS KY TX (-)
SS KY RX (+)
SS KY RX (-)
SS V/A TX (+)
SS V/A TX (-)
SS V/A RX (+)
SS V/A RX (-)
SS CUE LVL
SS COM TX
SS COM RX
SS COM RTS
SS COM CTS
SS COM DTR
SS COM DSR
SS COM DCD
SS OSD CS0
SS OSD CS1
SS OSD TRE0
SS OSD TRE1
SS OSP HX
SS OSP HBCK
SS SYPS2 RES
SS SYPS2 CMD
SS SYPS2 CK
SS SYPS2 RDY
SS SYPS2 DW CS
SS SYPS2 EQ CS
SS SYPS2 APR CS
SS SYPS2 CUE CS
SS SYPS3 CK
SS SYPS3 CMD
SS SYPS3 RES
SS SYPS3 RDY
SS SYPS3 CS0
SS SYPS3 CS1
SS SYPS3 CS2
SS SYPS3 CS3
SS SYPS3 CS4
SS SYPS3 CS5
SS SYPS3 CS6
SS SYPS3 CS7
SS SYPS0 CK
SS SYPS0 CMD
SS SYPS1 RDY
SS SYPS1 CMD
SS SYPS1 CK
SS SYPS1 RES
SS TF RES
SS TF CK
SS TF CMD
SS TX XR REQ
SS TF CS
SS TF XS REQ
SS CP CS
SS SY EEPROM CS
FP BOARD DET
SUFFIX -17 AND HIGHER
SUFFIX -16
S1501
S1502
S1500
MAINTE
S1100
LOG
D1503
MAINTE
D1502
SYS STS2
D1501
SYS STS1
D1102
LOG
D1101
CPU
D1100
ERR
Q1500-1502
Q1100-1102
LED DRIVE
DATA BUS EXCHANGE
P/S CONV.
TP1503 9PIN TX
TP1500 9PIN RX
TP1502 KY TX
TP1501 KY RX
TP1504 SYS DINT
TP1505 SYS SINT
TP1100 TEST1
TP1101 TEST2
FPGA DONE
FPGA RESET
FPGA_INT
SYS FRAME
PB LTC
LTC SOURCE
REC LTCO
LTC OUTO
EDIT CTL
LTC OUT SEL
REC LTC SEL
L TC EQ 625
L TC EQ 525
FIFO RST
SYS SRAME
SYS DB I/F CS
SYS HD I/F CS
SYS SX I/F CS
SYS MPEG I/F CS
SYS PIO CS
ZRAM CS
ICCA RD CS
SYS JIG CK
SYS BUS0 CK
SYS BUS1 CK
OSD CK
SIO CK
FIFO CLK
SYS BUS DIR
EXT DATA EN
SYS JIG RESET
SYS BUS1 WAIT
SYS MPEG IF WAIT
OE BUS0
STRB BUS0
STRB BUS1
OE BUS1
SIO CS
TCG CS
CG CLR CS1
CG CLR CS0
SS OSD WAIT
SS SYPS2 WAIT
SS SYPS3 WAIT
SS SYPS0 WAIT
SS SYPS1 WAIT
SS SYPS2 RDY
SS SYPS3 RDY
SS SYPS0 CWD
SS SYPS1 CWD
SS TF CWD
SS SYPS1 RES
SS SYPS2 RES
SS SYPS3 RES
SS SYPS0 CK
SS SYPS1 CK
SS SYPS2 CK
SS SYPS3 CK
SS SYPS2 CWD
SS SYPS3 CWD
SS SYPS2 DW CS
SS SYPS2 EQ CS
SS SYPS2 APR CS
SS SYPS2 CUE CS
SS SYPS3 CS0
SS SYPS3 CS1
SS SYPS3 CS2
SS SYPS3 CS3
SS SYPS3 CS4
SS SYPS3 CS5
SS SYPS3 CS6
SS SYPS3 CS7
SS TF RES
SS TF CK
SS TF CMD
SS TX XR REQ
SS TF CS
SS TF XS REQ
SS CP CS
SS SY EEPROM CS
FP BOARD DET
SS SYPS1 RES
SS SYPS1 CWD
SS SYPS1 CK
SS SYPS0 CK
SS SYPS0 CWD
SS SYPS1 RDY
SS SYPS2 RES
SS SYPS2 CWD
SS SYPS2 CK
SS SYPS2 RDY
SS SYPS3 CK
SS SYPS3 CMD
SS SYPS3 RES
SS SYPS3 RDY
SS OSD CS0
SS OSD CS1
SS OSD TRE0
SS OSD TRE1
SS OSP HX
SS OSP HBCK
SS SYPS2 RES
SS SYPS2 CWD
SS SYPS2 CK
SS SYPS2 RDY
SS SYPS2 DW CS
SS SYPS2 EQ CS
SS SYPS2 APR CS
SS SYPS2 CUE CS
SS SYPS3 CK
SS SYPS3 CMD
SS SYPS3 RES
SS SYPS3 RDY
SS SYPS3 CS0
SS SYPS3 CS1
SS SYPS3 CS2
SS SYPS3 CS3
SS SYPS3 CS4
SS SYPS3 CS5
SS SYPS3 CS6
SS SYPS3 CS7
SS SYPS0 CK
SS SYPS0 CWD
SS SYPS1 RDY
SS SYPS1 CWD
SS SYPS1 CK
SS SYPS1 RES
SS TF RES
SS TF CK
SS TF CMD
SS TX XR REQ
SS TF CS
SS TF XS REQ
SS CP CS
SS SY EEPROM CS
FP BOARD DET
SS SYPS1 RES
SS SYPS1 CWD
SS SYPS1 CK
SS SYPS0 CK
SS SYPS0 CWD
SS SYPS1 RDY
SS SYPS2 RES
SS SYPS2 CWD
SS SYPS2 CK
SS SYPS2 RDY
SS SYPS3 CK
SS SYPS3 CMD
SS SYPS3 RES
SS SYPS3 RDY
SS OSD CS0
SS OSD CS1
SS OSD TRE0
SS OSD TRE1
SS OSP HX
SS OSP HBCK
SS SYPS2 RES
SS SYPS2 CWD
SS SYPS2 CK
SS SYPS2 RDY
SS SYPS2 DW CS
SS SYPS2 EQ CS
SS SYPS2 APR CS
SS SYPS2 CUE CS
SS SYPS3 CK
SS SYPS3 CMD
SS SYPS3 RES
SS SYPS3 RDY
SS SYPS3 CS0
SS SYPS3 CS1
SS SYPS3 CS2
SS SYPS3 CS3
SS SYPS3 CS4
SS SYPS3 CS5
SS SYPS3 CS6
SS SYPS3 CS7

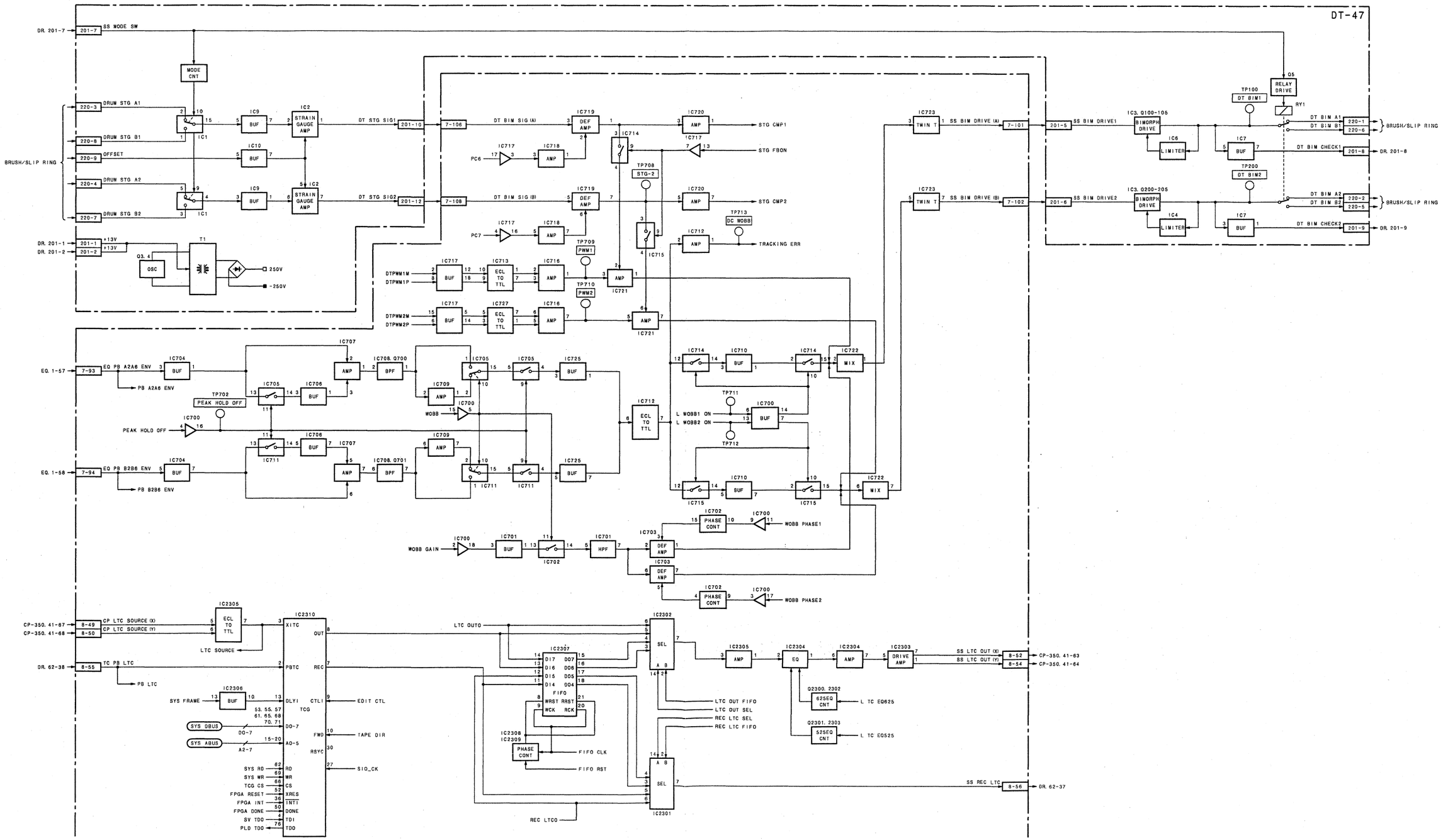
DT-47
DR. 201-7
201-7
SS MODE SW
MODE CNT
220-3
DRUM STG A1
220-8
DRUM STG B1
220-9
OFFSET
220-4
DRUM STG A2
220-7
DRUM STG B2
BRUSH/SLIP RING
IC1
IC9
BUF
IC10
IC2
STRAIN GAUGE AMP
DT STG SIG1
DT STG SIG2
201-10
201-12
7-106
7-108
DT BIM SIG (A)
DT BIM SIG (B)
IC719
DEF AMP
IC720
AMP
STG CMP1
STG CMP2
STG FBON
IC714
IC717
IC718
PC6
PC7
TP708
STG-2
TP709
PWM1
TP710
PWM2
IC715
IC721
IC712
TP713
DC WOBB
TRACKING ERR
DR. 201-1
DR. 201-2
201-1
201-2
+13V
Q3. 4
OSC
T1
250V
-250V
DTPWM1M
DTPWM1P
DTPWM2M
DTPWM2P
IC713
ECL TO TTL
IC716
IC727
EQ. 1-57
EQ. 1-58
7-93
7-94
EQ PB A2A6 ENV
EQ PB B2B6 ENV
PB A2A6 ENV
PB B2B6 ENV
IC704
IC705
IC706
IC707
IC708. Q700
IC708. Q701
BPF
IC709
IC725
TP702
PEAK HOLD OFF
IC700
WOBB
IC711
IC722
MIX
IC723
TWIN T
SS BIM DRIVE (A)
SS BIM DRIVE (B)
7-101
7-102
201-5
201-6
SS BIM DRIVE1
SS BIM DRIVE2
IC3. Q100-105
IC3. Q200-205
BIMORPH DRIVE
IC6
IC4
LIMITER
Q5
RELAY DRIVE
RY1
TP100
DT BIM1
TP200
DT BIM2
DT BIM A1
DT BIM B1
DT BIM A2
DT BIM B2
220-1
220-6
220-2
220-5
BRUSH/SLIP RING
DT BIM CHECK1
DT BIM CHECK2
201-8
201-9
DR. 201-8
DR. 201-9
L WOBB1 ON
L WOBB2 ON
TP711
TP712
IC710
IC715
PHASE CONT
WOBB PHASE1
WOBB PHASE2
WOBB GAIN
IC701
IC702
IC703
HPF
DEF AMP
CP-350. 41-67
CP-350. 41-68
8-49
8-50
CP LTC SOURCE (X)
CP LTC SOURCE (Y)
LTC SOURCE
DR. 62-38
8-55
TC PB LTC
PB LTC
IC2305
IC2310
IC2306
SYS FRAME
SYS DBUS
SYS ABUS
D0-7
A0-5
A2-7
53. 55. 57
61. 65. 68
70. 71
15-20
XITC
PBTC
DLYI
CTLI
TCG
OUT
REC
FWD
RSYC
EDIT CTL
TAPE DIR
SIO_CK
SYS RD
SYS WR
TCG CS
FPGA RESET
FPGA INT
FPGA DONE
SV TDO
PLD TDO
RD
WR
CS
XRES
INTI
DONE
TDI
TDO
LTC OUTO
REC LTCO
IC2302
SEL
IC2307
FIFO
IC2308
IC2309
FIFO CLK
FIFO RST
LTC OUT FIFO
LTC OUT SEL
REC LTC SEL
REC LTC FIFO
IC2304
EQ
DRIVE AMP
SS LTC OUT (X)
SS LTC OUT (Y)
8-52
8-54
CP-350. 41-63
CP-350. 41-64
Q2300. 2302
625EQ CNT
L TC EQ625
Q2301. 2303
525EQ CNT
L TC EQ525
IC2301
SS REC LTC
8-56
DR. 62-37

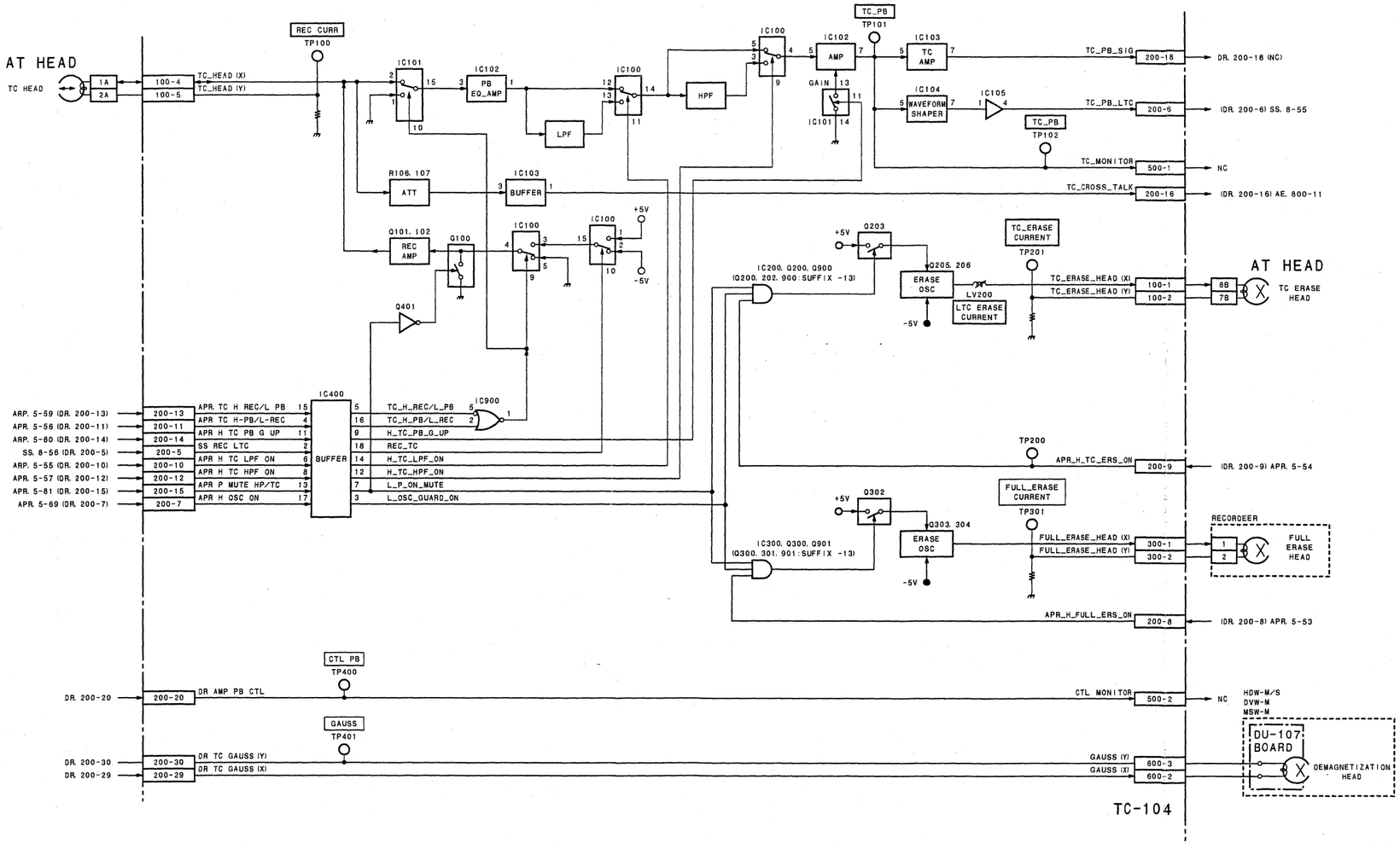

TC REC/PB circuit, TC/full erase oscillator

TC-104

VN-13 (1/2) MSW-M2000E/P, M2100E/P, BKMW-E2000/E3000 (for MSW)
SUFFIX: -12, 13

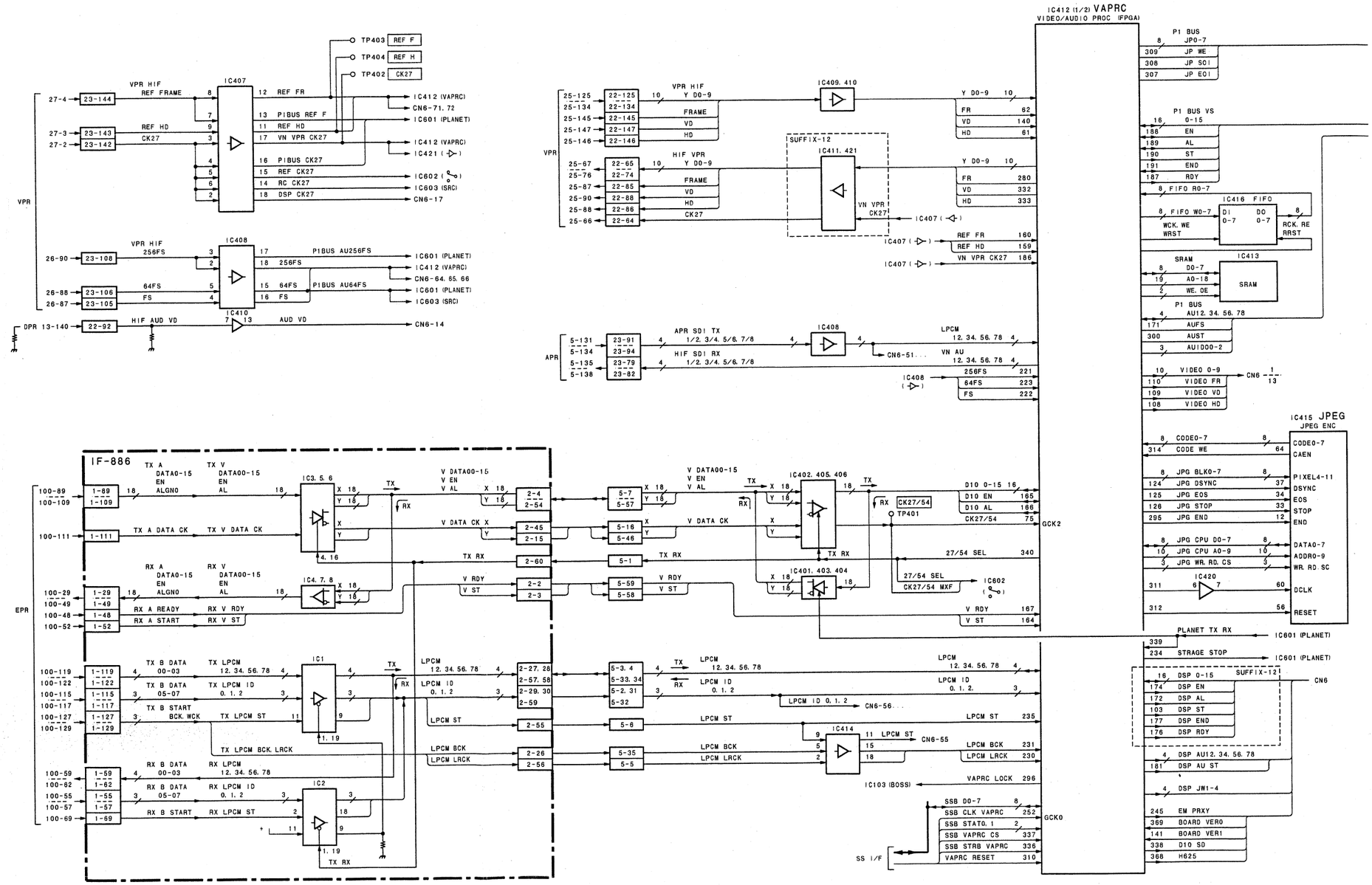

3-94 (b)

VN-13 (1/2) MSW-M2000E/P, M2100E/P, BKMW-E2000/E3000 (for MSW)
SUFFIX: -12, 13

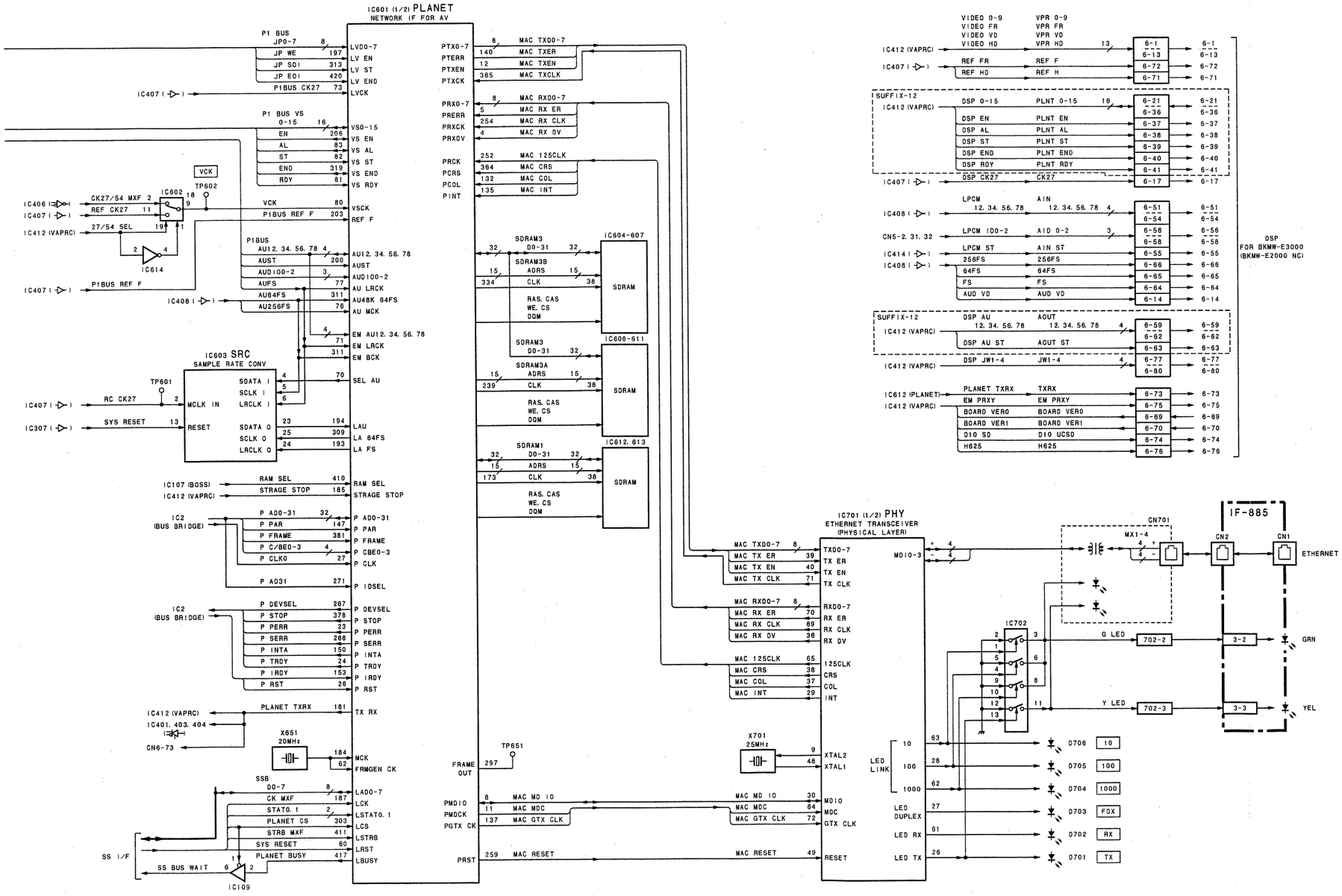

Network interface,
VN-13 (1/2)

BOARD NO. 1-687-221-12, 13
Lot No. 495- (SUFFIX 13-) For MSW-M2000E/P, M2100E/P
Lot No. 451-494 (SUFFIX 12) For BKMW-E2000 (Option for MSW)
Lot No. 495- (SUFFIX 13-) For BKMW-E3000 (Option for MSW)

VN-13 (2/2) MSW-M2000E/P, M2100E/P, BKMW-E2000/E3000 (for MSW) SUFFIX: -12, 13

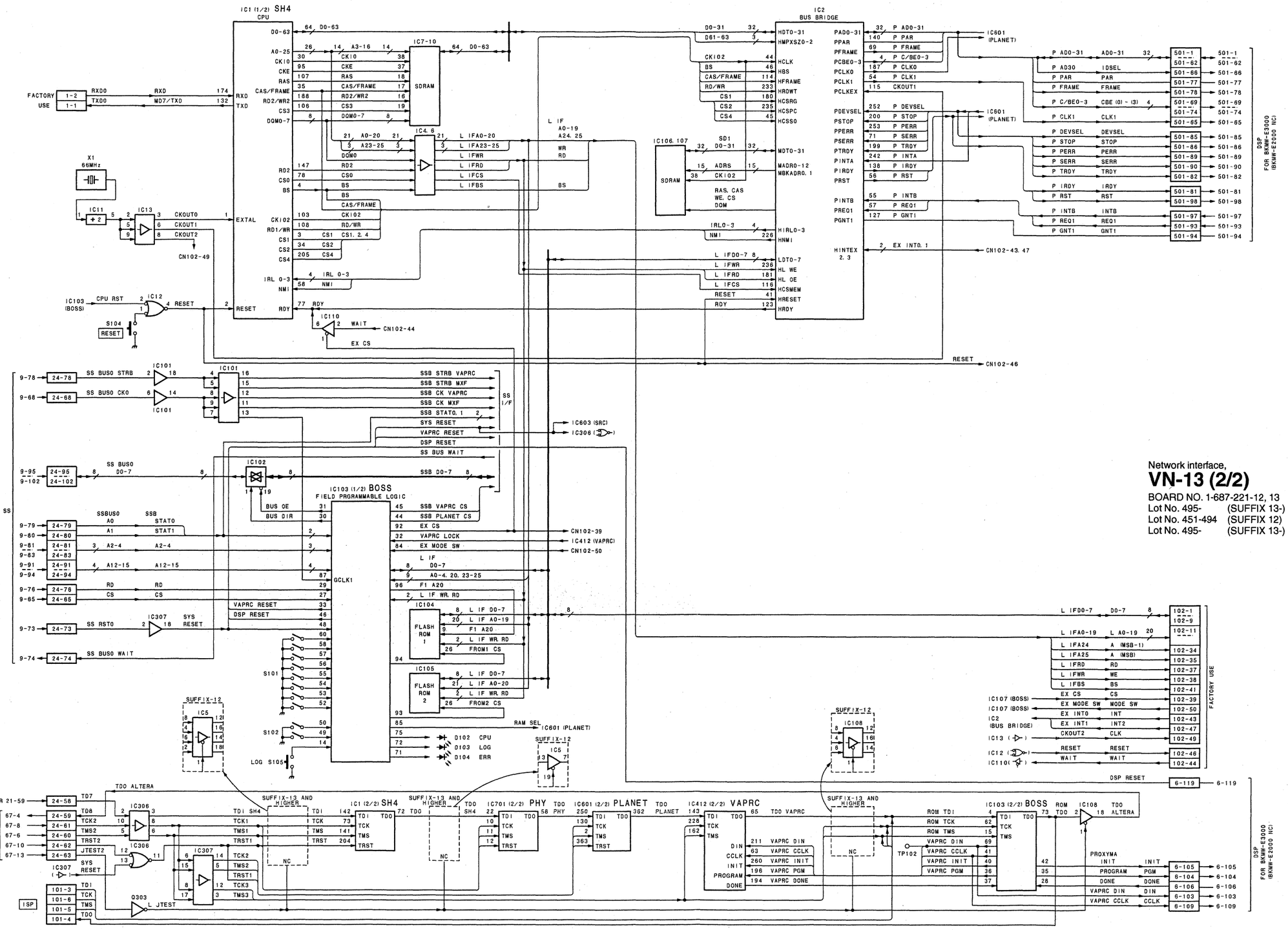

VN-13 (1/2) BKMW-E2000 (for MSW) SUFFIX: -11

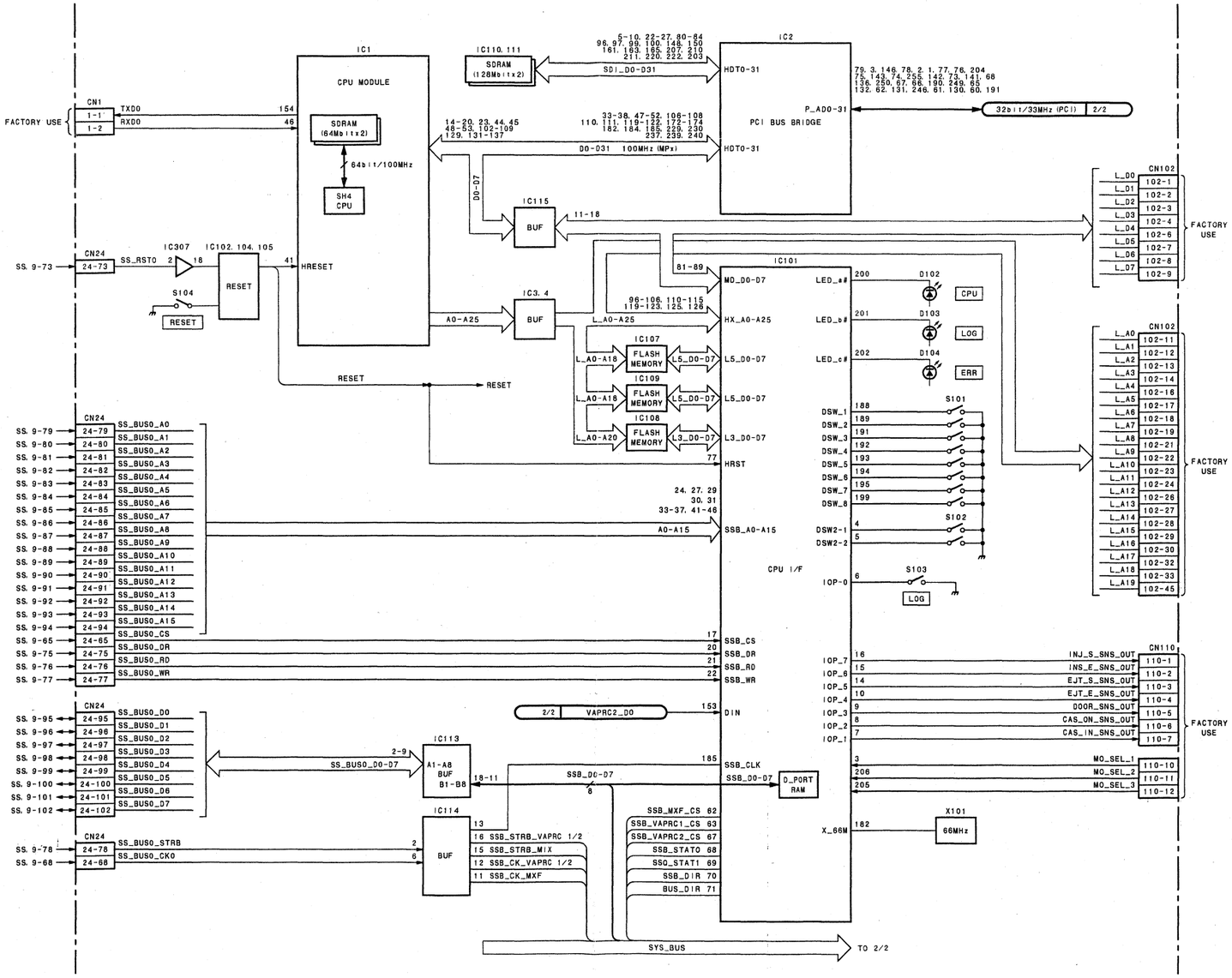

3-94 (a)

Network interface,
VN-13 (1/2)
BOARD NO. 1-687-221-11
Lot No. 314-444 For BKMW-E2000 (Option for MSW)

VN-13 (2/2) BKMW-E2000 (for MSW)
SUFFIX: -11

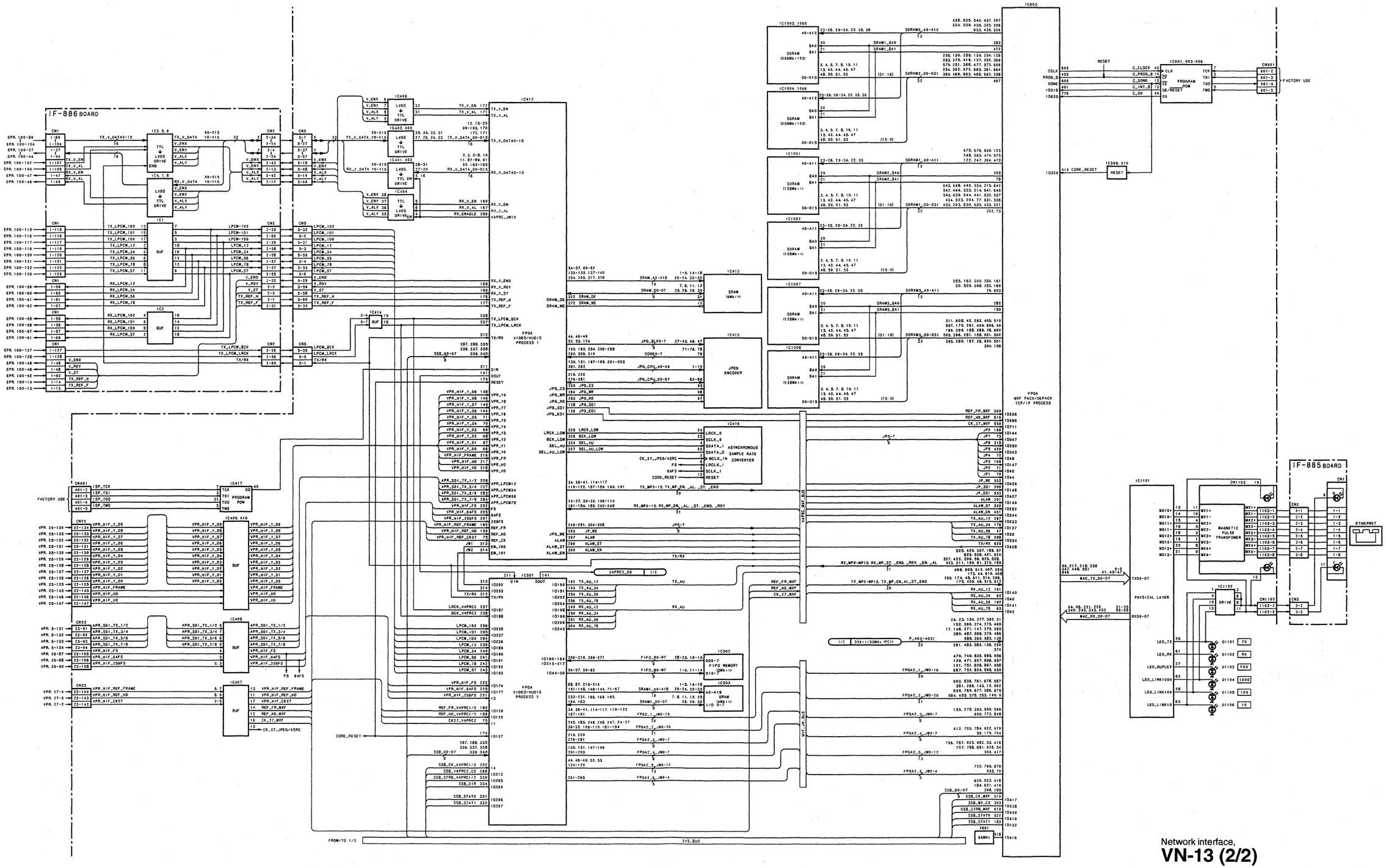

Network interface,
VN-13 (2/2)
BOARD NO. 1-687-221-11
Lot No. 314-444 For BKMW-E2000 (Option for MSW)

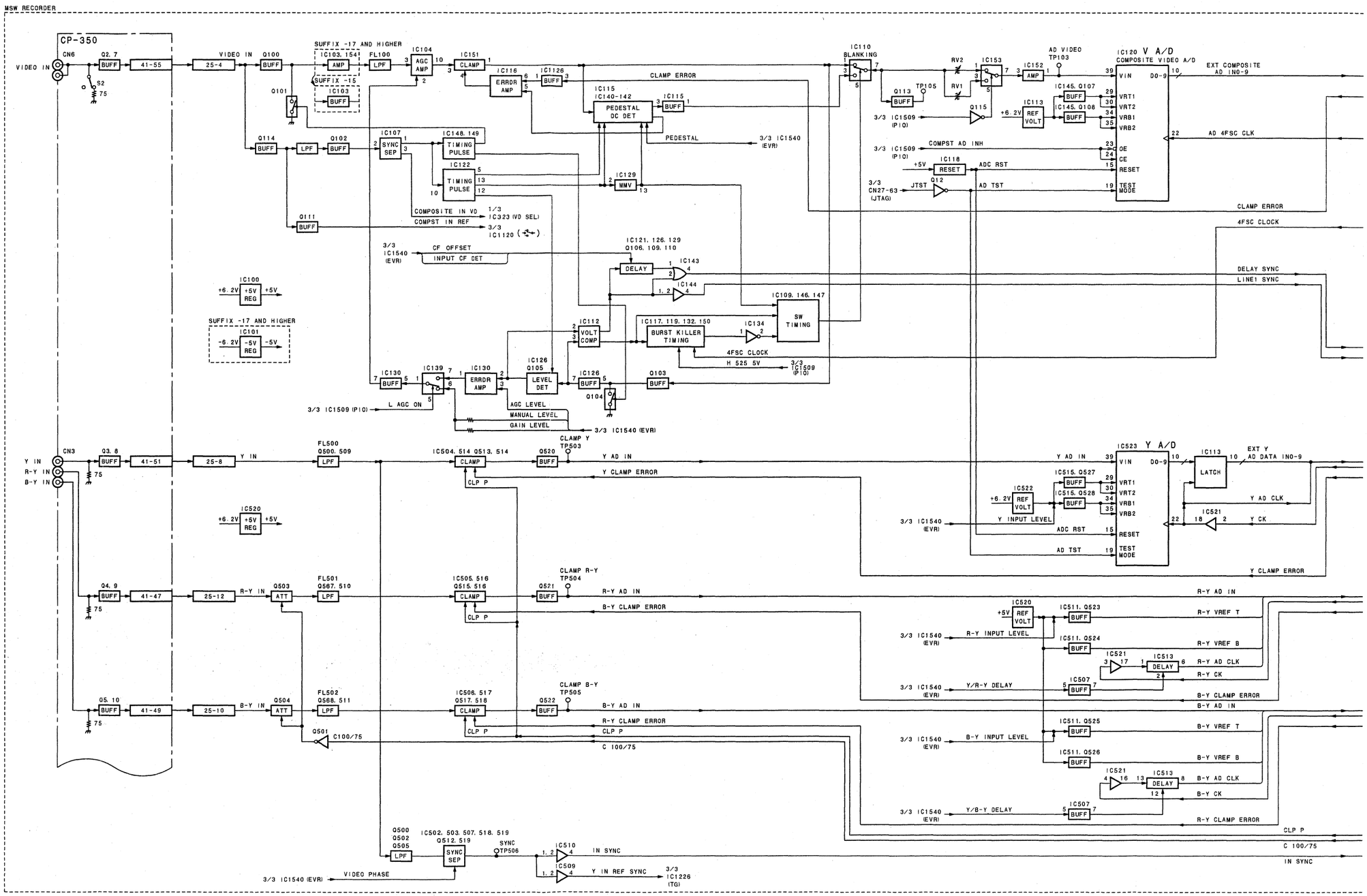
MSW RECORDER
CP-350
VIDEO IN
CN6
Q2, 7
BUFF
41-55
S2
75
25-4
Q100
BUFF
Q101
SUFFIX -17 AND HIGHER
IC103, 154
AMP
SUFFIX -15
IC103
BUFF
FL100
LPF
IC104
AGC AMP
IC151
CLAMP
IC116
ERROR AMP
IC1126
BUFF
CLAMP ERROR
IC115
IC140-142
PEDESTAL DC DET
IC115
BUFF
PEDESTAL
3/3 IC1540 (EVR)
IC110
BLANKING
Q113
BUFF
TP105
RV2
RV1
Q115
3/3 IC1509 (P10)
IC153
IC152
AMP
AD VIDEO TP103
IC113
REF VOLT
+6.2V
IC145, Q107
IC145, Q108
BUFF
IC120 V A/D
COMPOSITE VIDEO A/D
VIN
VRT1
VRT2
VRB1
VRB2
OE
CE
RESET
TEST MODE
D0-9
EXT COMPOSITE AD IN0-9
AD 4FSC CLK
3/3 IC1509 (P10)
COMPST AD INH
+5V
IC118
RESET
ADC RST
3/3 CN27-63 (JTAG)
JTST
Q12
AD TST
CLAMP ERROR
4FSC CLOCK
DELAY SYNC
LINE1 SYNC
Q114
BUFF
LPF
Q102
BUFF
IC107
SYNC SEP
IC148, 149
TIMING PULSE
IC122
TIMING PULSE
IC129
MMV
COMPOSITE IN VD
1/3 IC323 (VD SEL)
COMPST IN REF
3/3 IC1120
Q111
BUFF
3/3 IC1540 (EVR)
CF OFFSET
INPUT CF DET
IC121, 126, 129
Q106, 109, 110
DELAY
IC143
IC144
IC109, 146, 147
SW TIMING
IC100
+6.2V
+5V REG
+5V
SUFFIX -17 AND HIGHER
IC101
-6.2V
-5V REG
-5V
IC112
VOLT COMP
IC117, 119, 132, 150
BURST KILLER TIMING
IC134
4FSC CLOCK
H 525 5V
3/3 TG1509 (P10)
IC130
BUFF
IC139
IC130
ERROR AMP
IC126
Q105
LEVEL DET
IC126
BUFF
Q103
BUFF
Q104
L AGC ON
3/3 IC1509 (P10)
AGC LEVEL
MANUAL LEVEL
GAIN LEVEL
3/3 IC1540 (EVR)
CN3
Q3, 8
BUFF
41-51
75
25-8
Y IN
Y IN
R-Y IN
B-Y IN
FL500
Q500, 509
LPF
IC504, 514 Q513, 514
CLAMP
CLP P
Q520
BUFF
CLAMP Y
TP503
Y AD IN
Y CLAMP ERROR
IC520
+6.2V
+5V REG
+5V
IC523 Y A/D
VIN
VRT1
VRT2
VRB1
VRB2
RESET
TEST MODE
D0-9
IC515, Q527
IC515, Q528
BUFF
IC522
REF VOLT
Y INPUT LEVEL
3/3 IC1540 (EVR)
ADC RST
AD TST
IC113
LATCH
EXT Y AD DATA IN0-9
Y AD CLK
IC521
Y CK
Y CLAMP ERROR
Q4, 9
BUFF
41-47
75
25-12
R-Y IN
Q503
ATT
FL501
Q567, 510
LPF
IC505, 516
Q515, 516
CLAMP
CLP P
Q521
BUFF
CLAMP R-Y
TP504
R-Y AD IN
B-Y CLAMP ERROR
IC520
+5V
REF VOLT
R-Y INPUT LEVEL
3/3 IC1540 (EVR)
IC511, Q523
IC511, Q524
BUFF
R-Y VREF T
R-Y VREF B
IC521
IC513
DELAY
R-Y AD CLK
R-Y CK
Y/R-Y DELAY
IC507
BUFF
B-Y CLAMP ERROR
Q5, 10
BUFF
41-49
75
25-10
B-Y IN
Q504
ATT
FL502
Q568, 511
LPF
IC506, 517
Q517, 518
CLAMP
CLP P
Q522
BUFF
CLAMP B-Y
TP505
B-Y AD IN
R-Y CLAMP ERROR
CLP P
C 100/75
Q501
C100/75
B-Y INPUT LEVEL
IC511, Q525
IC511, Q526
B-Y VREF T
B-Y VREF B
B-Y AD CLK
B-Y CK
Y/B-Y DELAY
R-Y CLAMP ERROR
CLP P
C 100/75
IN SYNC
Q500
Q502
Q505
LPF
IC502, 503, 507, 518, 519
Q512, 519
SYNC SEP
SYNC TP506
IC510
IC509
IN SYNC
Y IN REF SYNC
3/3 IC1226 (TG)
3/3 IC1540 (EVR)
VIDEO PHASE

VPR-64 (1/3) HDW, MSW

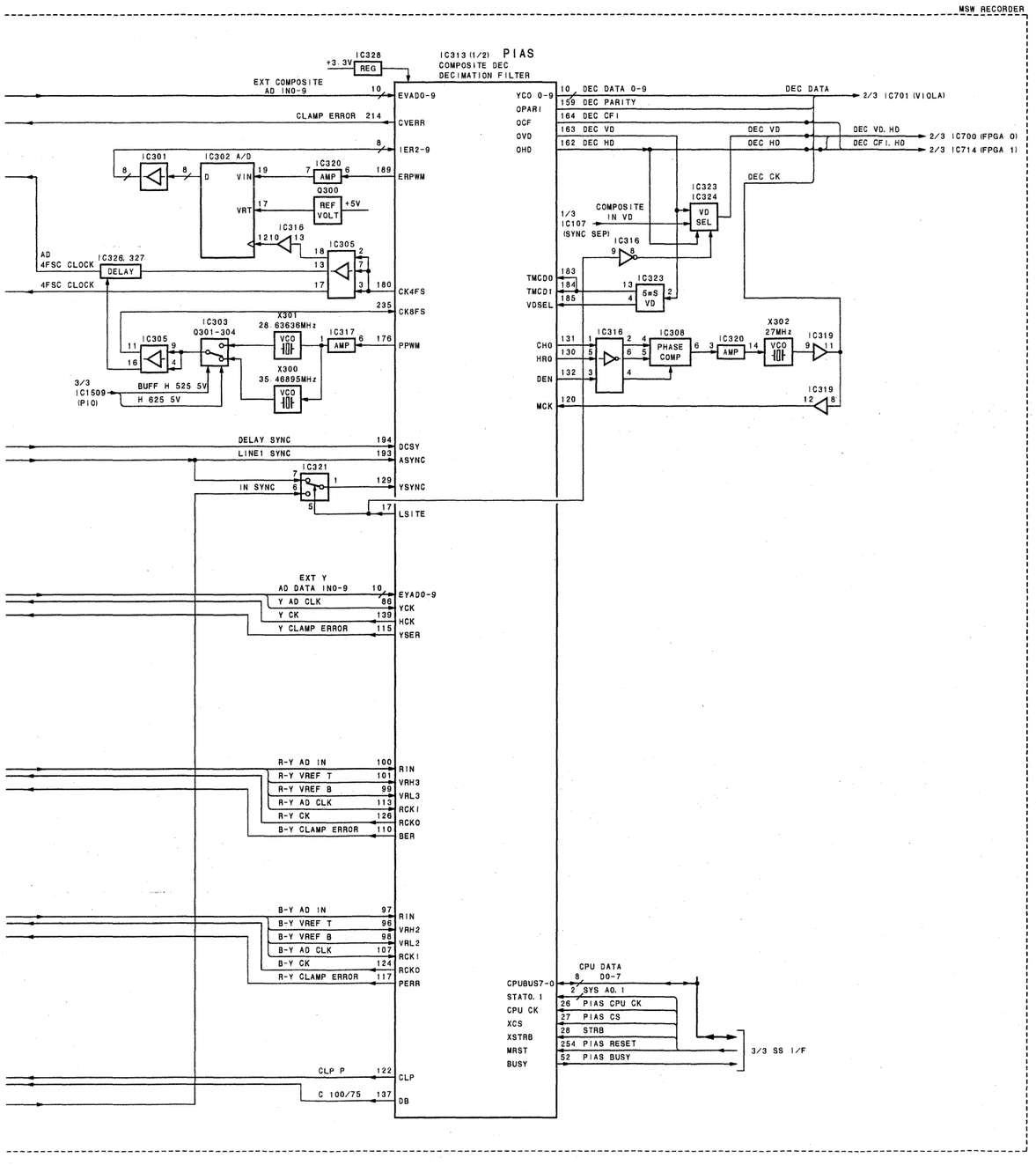

Video signal processor (Composite decoder/encoder, Component A-D/D-A, SDI interface, Reference clock generator)

VPR-64 (1/3)

VPR-64A:	Lot No. 261-	For HDW-2000, M2000/P, M2100/P, A2100
	Lot No. 4C2-	For HDW-D2000
	Lot No. 462-	For HDW-S2000/P
	Lot No. 261-	For MSW-M2100/P
	Lot No. 495-	For MSW-M2100E/P
VPR-64:	Lot No. 261-	For MSW-2000, A2000/P, M2000/P
	Lot No. 495-	For MSW-M2000E/P

3-99

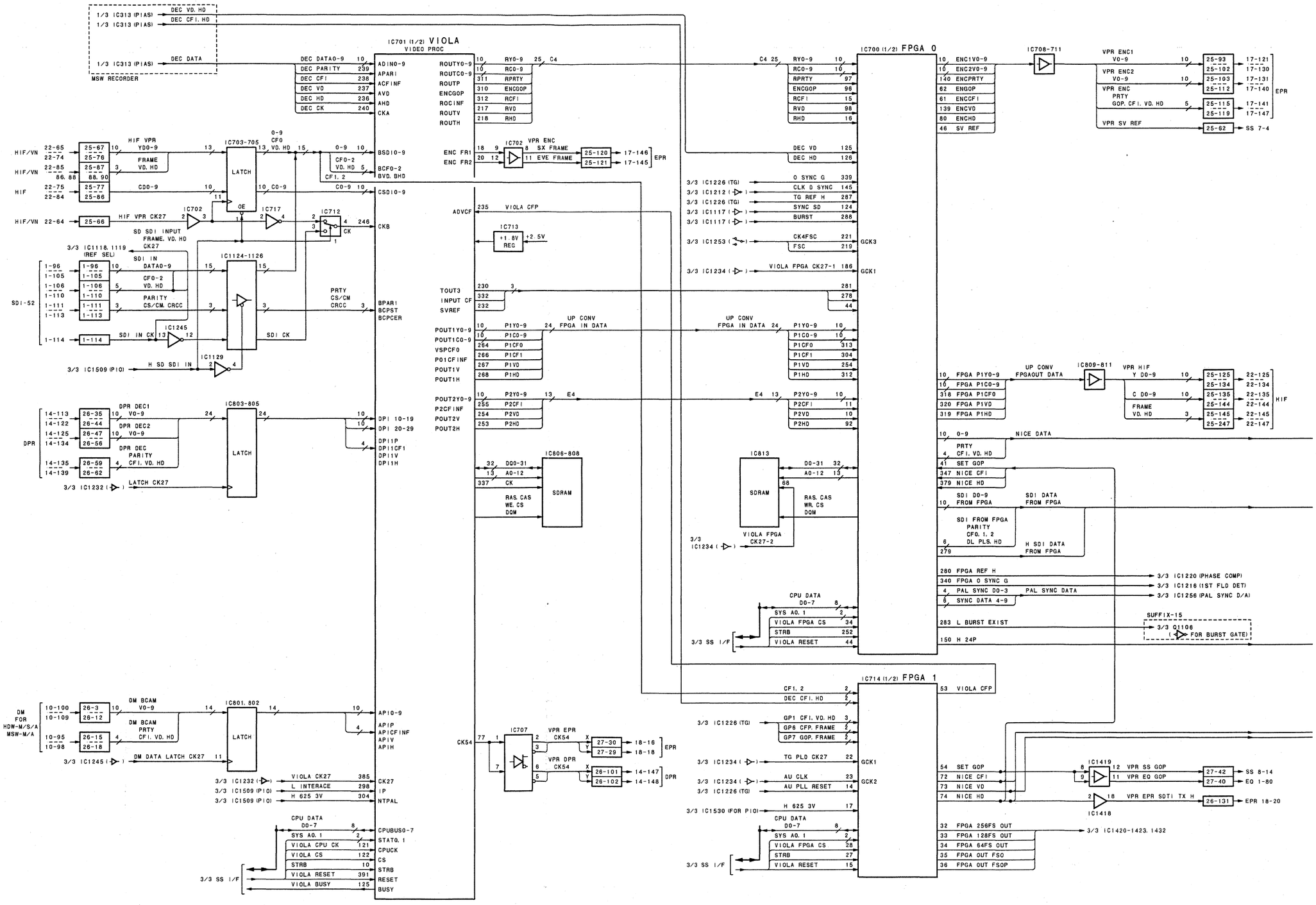
IC701 (1/2) VIOLA
VIDEO PROC
IC700 (1/2) FPGA 0
IC714 (1/2) FPGA 1
IC703-705
IC1124-1126
IC803-805
IC801, 802
IC806-808
IC813
IC702
IC712
IC713
IC707
IC708-711
IC809-811
IC1419
IC1418
IC1245
IC1129
IC1232
IC1509 (PIO)
IC1220 (PHASE COMP)
IC1216 (1ST FLD DET)
IC1256 (PAL SYNC D/A)
IC1420-1423, 1432
MSW RECORDER
LATCH
SDRAM
SUFFIX-15
EPR
DPR
HIF
SDI-52
DM FOR HDW-M/S/A MSW-M/A

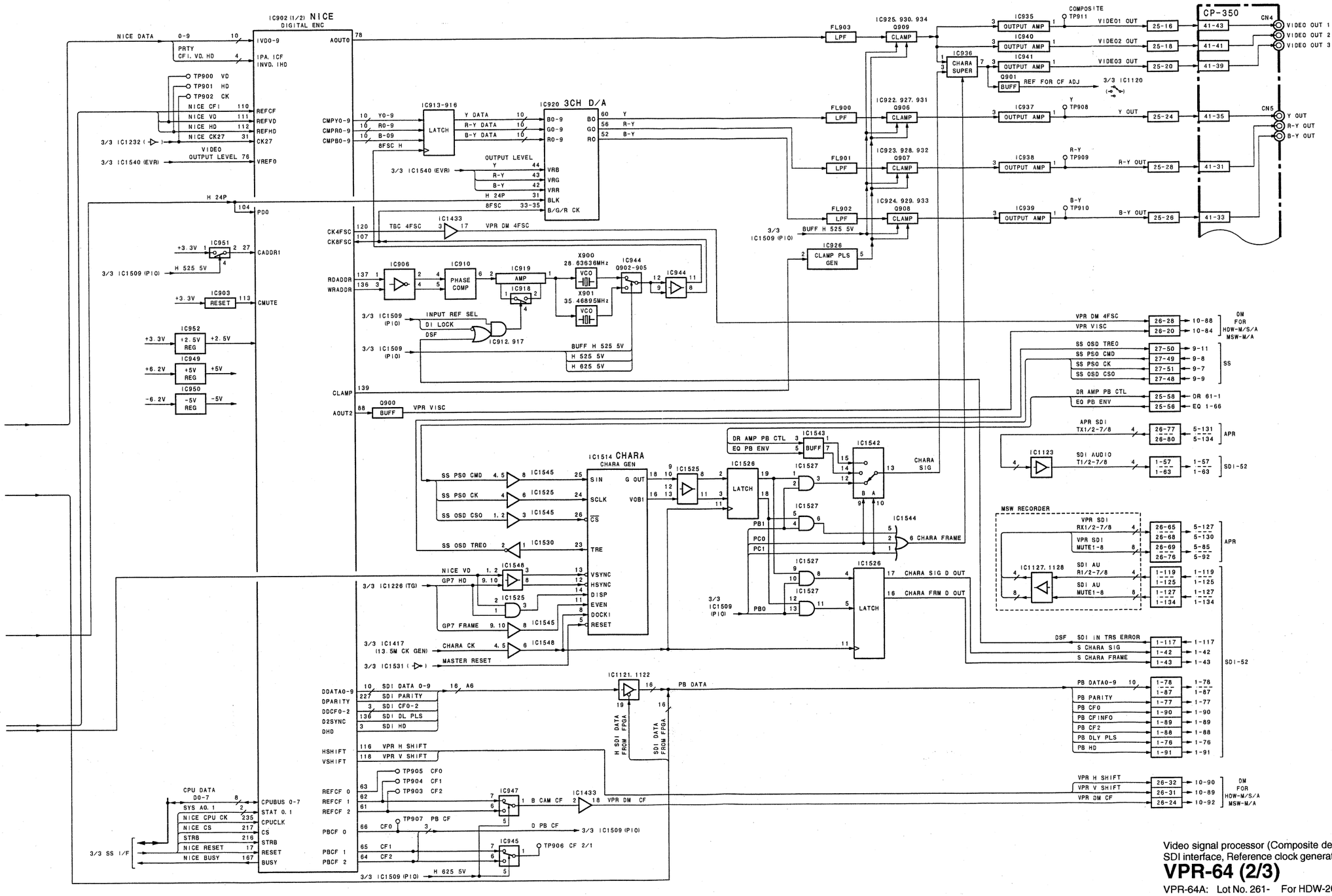

Video signal processor (Composite decoder/encoder, Component A-D/D-A, SDI interface, Reference clock generator)

VPR-64 (2/3)

VPR-64A: Lot No. 261- For HDW-2000, M2000/P, M2100/P, A2100
Lot No. 4C2- For HDW-D2000
Lot No. 462- For HDW-S2000/P
Lot No. 261- For MSW-M2100/P
Lot No. 495- For MSW-M2100E/P

VPR-64: Lot No. 261- For MSW-2000, A2000/P, M2000/P
Lot No. 495- For MSW-M2000E/P

VPR-64 (3/3) HDW, MSW

3-102

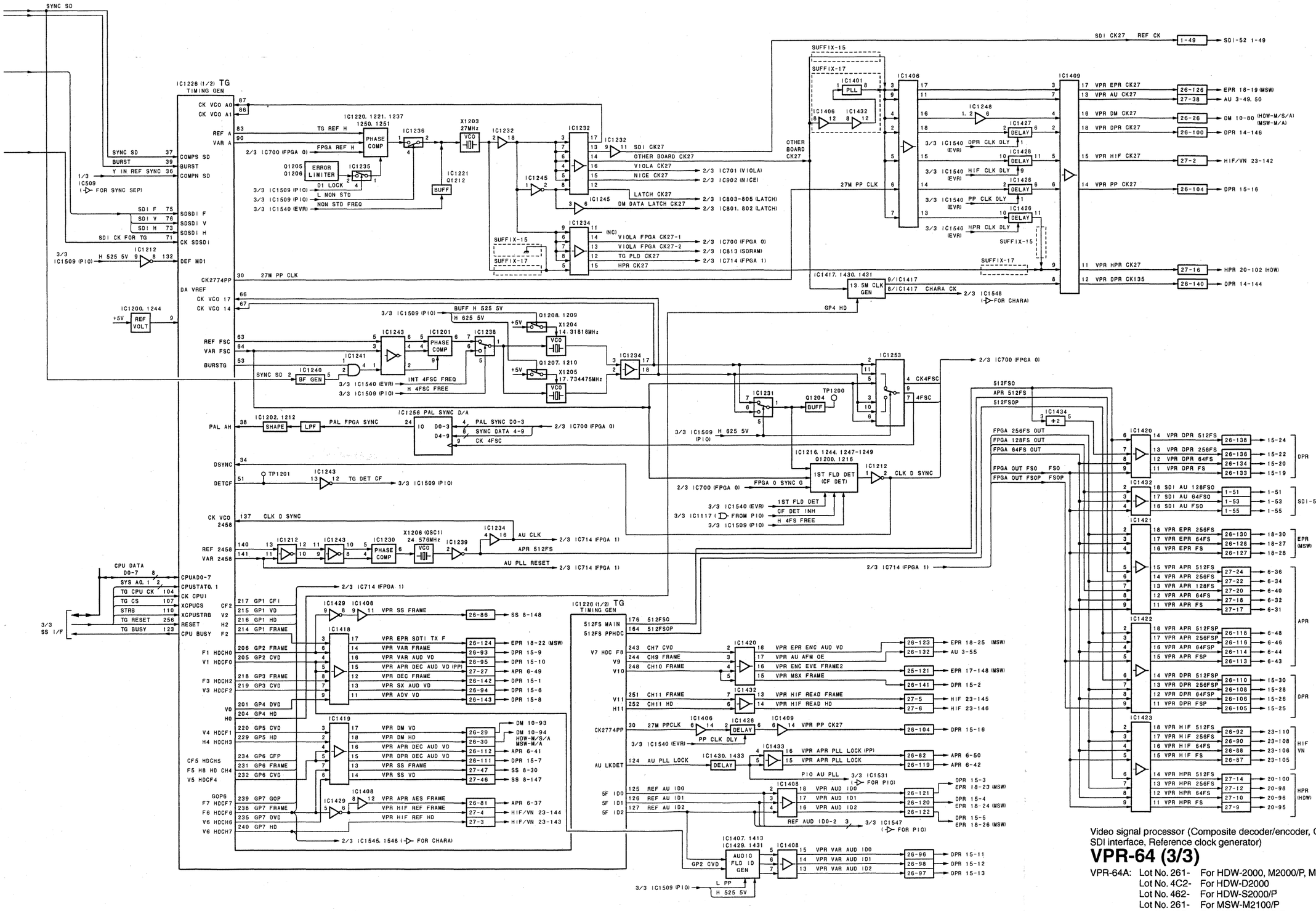

Video signal processor (Composite decoder/encoder, Component A-D/D-A, SDI interface, Reference clock generator)

VPR-64 (3/3)

VPR-64A: Lot No. 261- For HDW-2000, M2000/P, M2100/P, A2100
Lot No. 4C2- For HDW-D2000
Lot No. 462- For HDW-S2000/P
Lot No. 261- For MSW-M2100/P
Lot No. 495- For MSW-M2100E/P
VPR-64: Lot No. 261- For MSW-2000, A2000/P, M2000/P
Lot No. 495- For MSW-M2000E/P

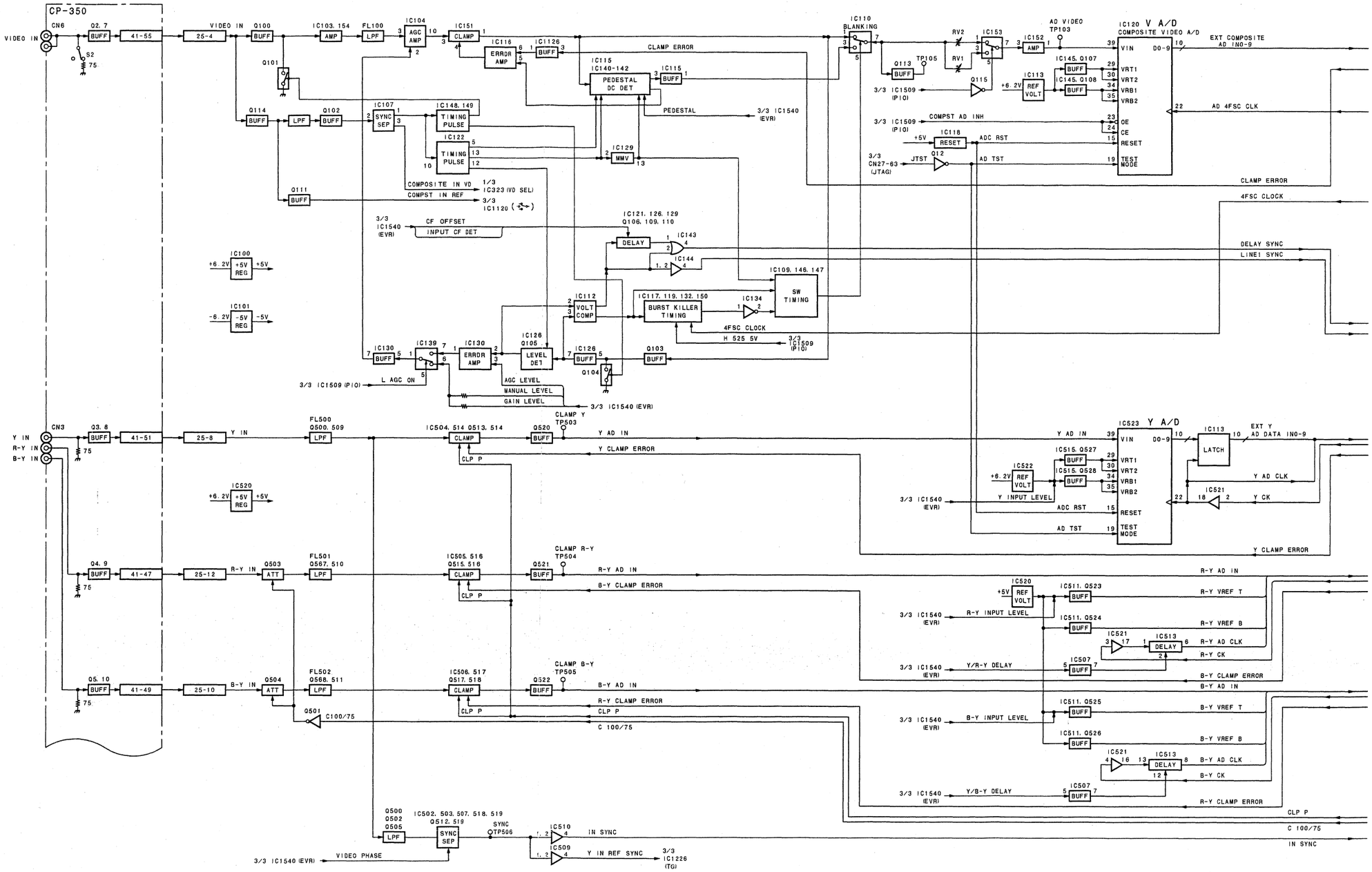
CP-350
CN6
VIDEO IN
Q2, 7
BUFF
41-55
S2
75
25-4
Q100
Q101
IC103, 154
AMP
FL100
LPF
IC104
AGC AMP
IC151
CLAMP
IC116
ERROR AMP
IC1126
CLAMP ERROR
IC115
IC140-142
PEDESTAL DC DET
PEDESTAL
3/3 IC1540 (EVR)
Q114
Q102
IC107
SYNC SEP
IC148, 149
TIMING PULSE
IC122
IC129
MMV
COMPOSITE IN VD
COMPST IN REF
1/3 IC323 (VD SEL)
3/3 IC1120
Q111
3/3 IC1540 (EVR)
CF OFFSET
INPUT CF DET
IC121, 126, 129
Q106, 109, 110
DELAY
IC143
IC144
IC100
+6.2V
+5V REG
+5V
IC101
-6.2V
-5V REG
-5V
IC109, 146, 147
SW TIMING
IC112
VOLT COMP
IC117, 119, 132, 150
BURST KILLER TIMING
IC134
4FSC CLOCK
H 525 5V
3/3 IC1509 (P10)
IC130
IC139
IC130
ERROR AMP
IC126
Q105
LEVEL DET
IC126
Q103
Q104
L AGC ON
AGC LEVEL
MANUAL LEVEL
GAIN LEVEL
3/3 IC1540 (EVR)
IC110
BLANKING
RV2
RV1
IC153
IC152
AMP
AD VIDEO
TP103
IC120 V A/D
COMPOSITE VIDEO A/D
VIN
D0-9
EXT COMPOSITE AD IN0-9
Q113
TP105
Q115
IC113
REF VOLT
+6.2V
IC145, Q107
IC145, Q108
VRT1
VRT2
VRB1
VRB2
AD 4FSC CLK
3/3 IC1509 (P10)
COMPST AD INH
OE
CE
IC118
+5V
RESET
ADC RST
3/3 CN27-63 (JTAG)
JTST
Q12
AD TST
TEST MODE
CLAMP ERROR
4FSC CLOCK
DELAY SYNC
LINE1 SYNC
CN3
Y IN
R-Y IN
B-Y IN
Q3, 8
Q4, 9
Q5, 10
41-51
41-47
41-49
25-8
25-12
25-10
Y IN
R-Y IN
B-Y IN
FL500
Q500, 509
FL501
Q567, 510
FL502
Q568, 511
IC504, 514 Q513, 514
IC505, 516 Q515, 516
IC506, 517 Q517, 518
CLAMP
Q520
Q521
Q522
CLAMP Y
TP503
CLAMP R-Y
TP504
CLAMP B-Y
TP505
CLP P
Y AD IN
R-Y AD IN
B-Y AD IN
Y CLAMP ERROR
B-Y CLAMP ERROR
R-Y CLAMP ERROR
IC520
+5V REG
Q503
Q504
ATT
Q501
C100/75
IC523 Y A/D
LATCH
EXT Y AD DATA IN0-9
Y AD CLK
Y CK
IC521
IC522
IC515, Q527
IC515, Q528
Y INPUT LEVEL
ADC RST
AD TST
IC511, Q523
IC511, Q524
IC511, Q525
IC511, Q526
R-Y VREF T
R-Y VREF B
B-Y VREF T
B-Y VREF B
R-Y INPUT LEVEL
B-Y INPUT LEVEL
IC513
DELAY
R-Y AD CLK
R-Y CK
B-Y AD CLK
B-Y CK
Y/R-Y DELAY
Y/B-Y DELAY
IC507
Q500
Q502
Q505
IC502, 503, 507, 518, 519
Q512, 519
LPF
SYNC SEP
SYNC
TP506
IC510
IC509
IN SYNC
Y IN REF SYNC
VIDEO PHASE
3/3 IC1226 (TG)

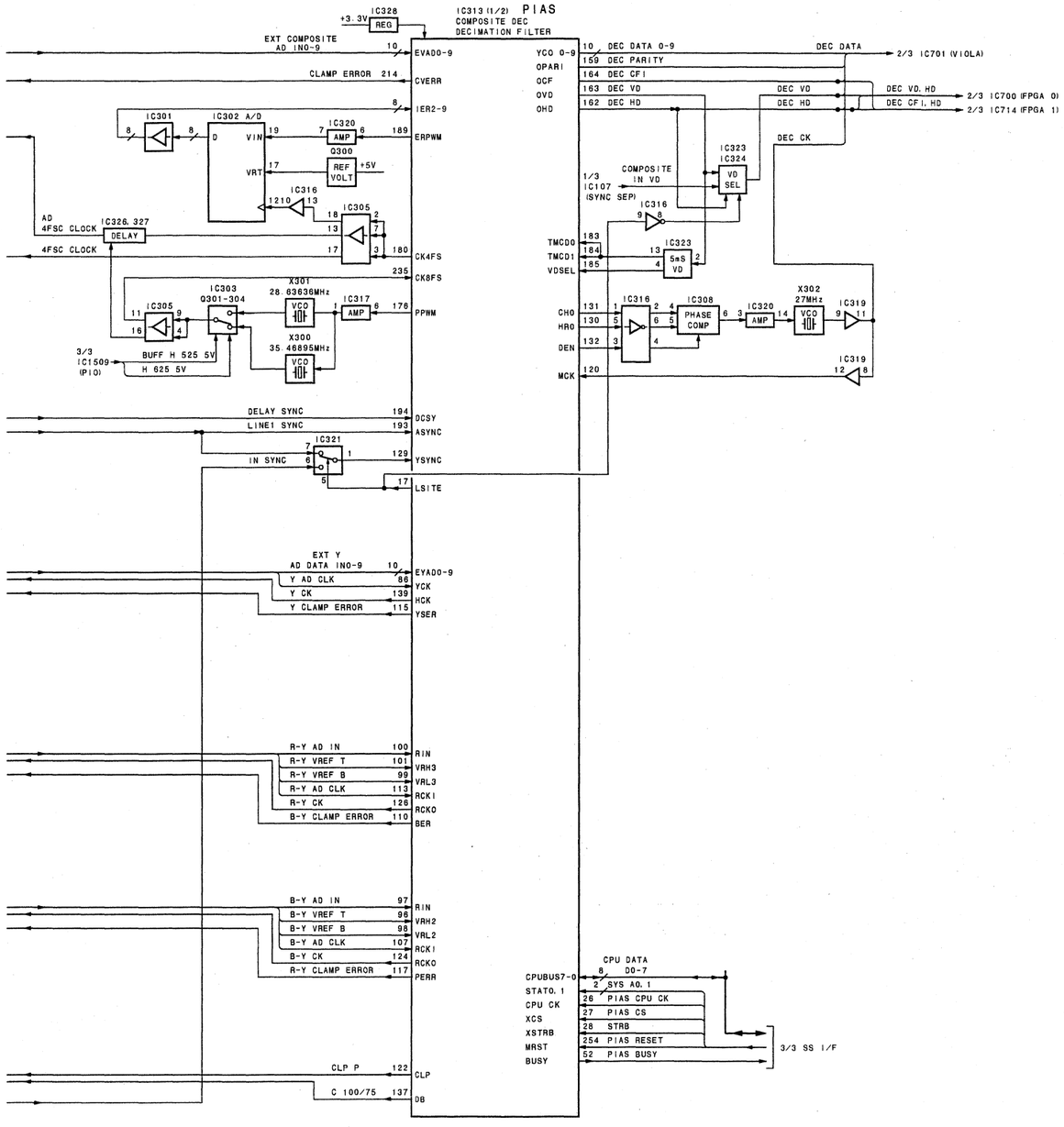

Video signal processor (Composite decoder/encoder, Component A-D/D-A, SDI interface, Reference clock generator)

VPR-91 (1/3)

BOARD NO. 1-861-999-11, 12
VPR-91: Lot No. 434- For DVW-2000/P, M2000/P

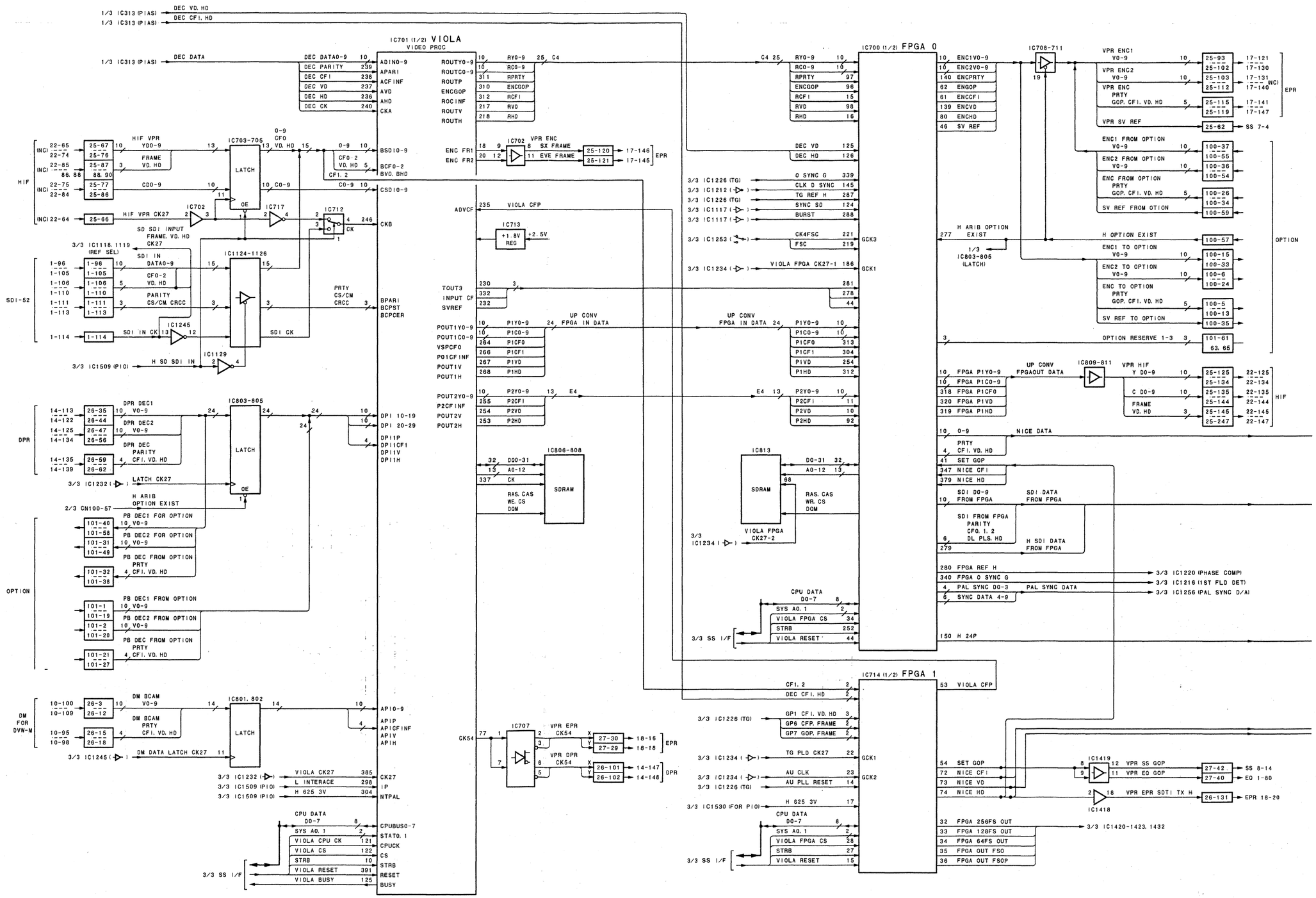
IC701 (1/2) VIOLA
VIDEO PROC
IC700 (1/2) FPGA 0
IC714 (1/2) FPGA 1
IC703-705
IC1124-1126
IC803-805
IC801, 802
IC702
IC713
IC806-808
IC813
IC707
IC708-711
IC809-811
IC1419
IC1418
IC1245
IC1129
IC1232
IC1234
IC1226 (TG)
IC1234 (TG)
IC1530 (FOR PIO)
IC1220 (PHASE COMP)
IC1216 (1ST FLD DET)
IC1256 (PAL SYNC D/A)
IC1420-1423, 1432
HIF
SDI-52
DPR
OPTION
DM FOR DVW-M
SDRAM
LATCH
EPR
OPTION
HIF

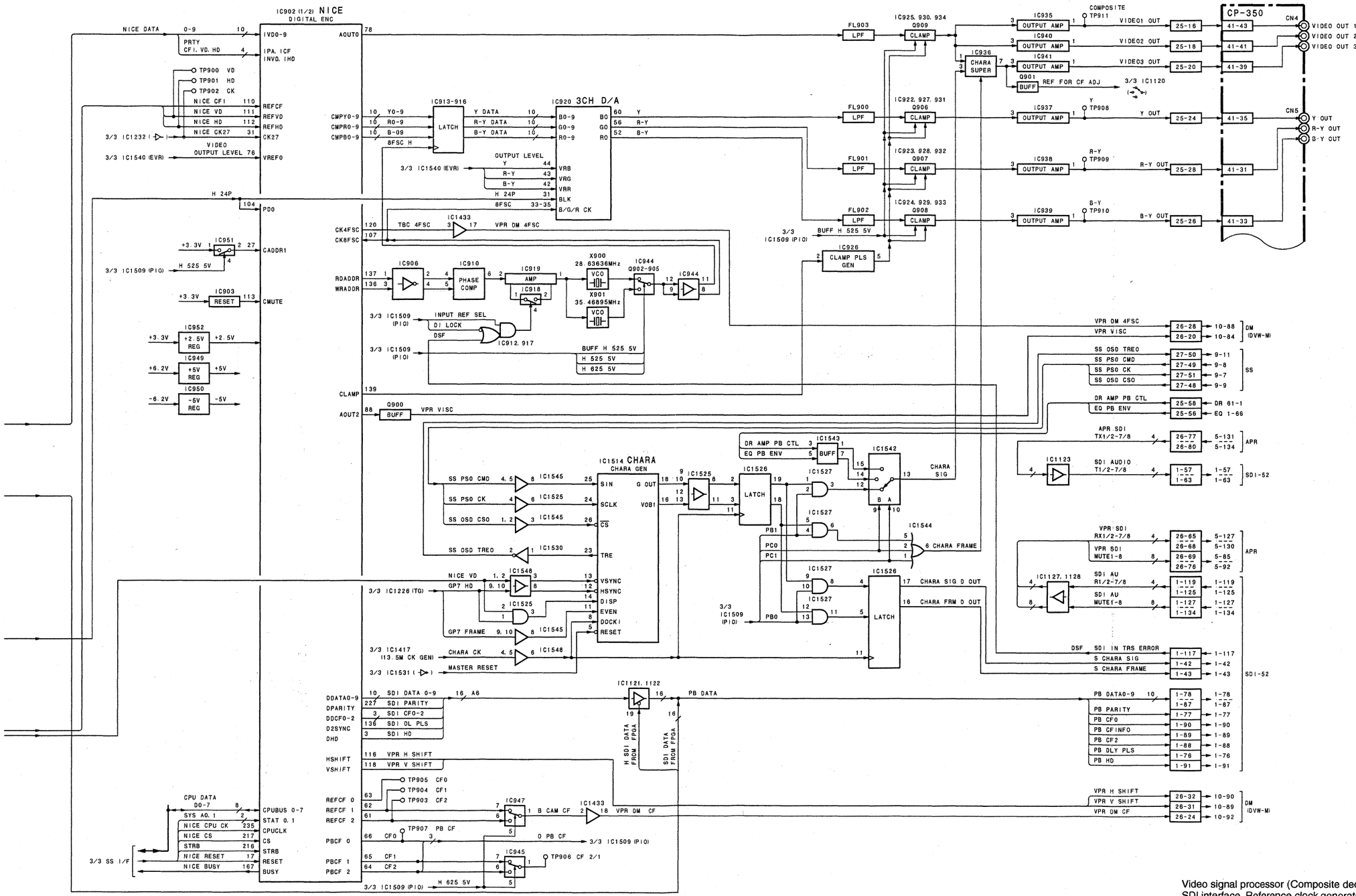

Video signal processor (Composite decoder/encoder, Component A-D/D-A, SDI interface, Reference clock generator)

VPR-91 (2/3)

BOARD NO. 1-861-999-11, 12

VPR-91: Lot No. 434- For DVW-2000/P, M2000/P

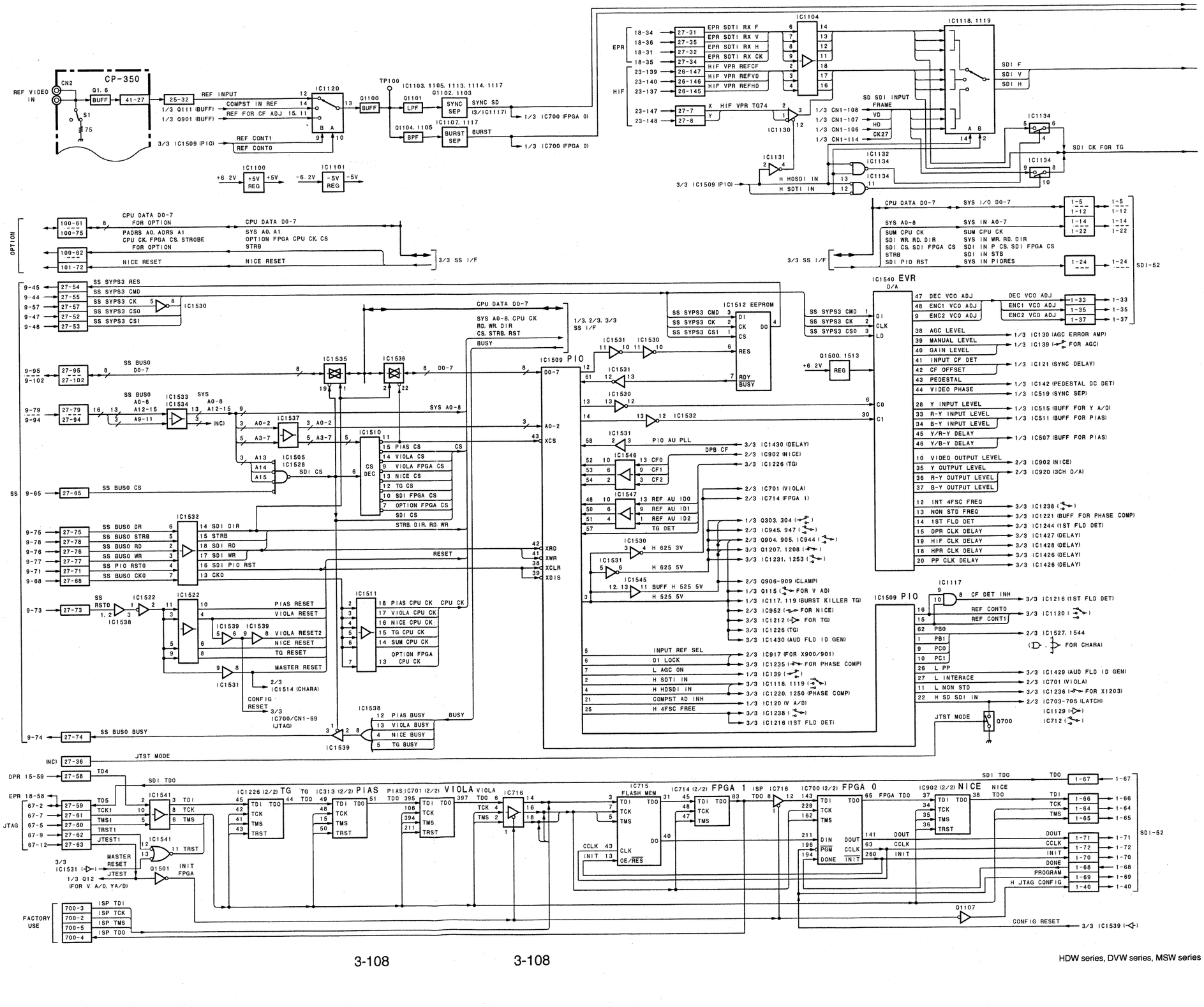
CP-350
REF VIDEO IN
CN2
Q1, 6
BUFF
41-27
25-32
REF INPUT
COMPST IN REF
REF FOR CF ADJ 15, 11
1/3 Q111 (BUFF)
1/3 Q901 (BUFF)
S1
75
IC1120
REF CONT1
REF CONT0
3/3 IC1509 (PIO)
Q1100
TP100
IC1103, 1105, 1113, 1114, 1117
Q1102, 1103
Q1101
LPF
SYNC SEP
SYNC SD
(3/IC1117)
1/3 IC700 (FPGA 0)
Q1104, 1105
BPF
IC1107, 1117
BURST SEP
BURST
IC1100
+6.2V
+5V REG
IC1101
-6.2V
-5V REG
EPR
HIF
SDI F
SDI V
SDI H
SD SDI INPUT FRAME
1/3 CN1-108
1/3 CN1-107
1/3 CN1-106
1/3 CN1-114
IC1104
IC1118, 1119
IC1130
IC1131
IC1132
IC1134
H HDSDI IN
H SDTI IN
SDI CK FOR TG
OPTION
CPU DATA D0-7 FOR OPTION
PADRS A0, ADRS A1
CPU CK, FPGA CS, STROBE FOR OPTION
SYS A0, A1
OPTION FPGA CPU CK, CS
STRB
NICE RESET
3/3 SS I/F
SYS I/O D0-7
SYS IN A0-7
SUM CPU CK
SDI WR, RD, DIR
SDI CS, SDI FPGA CS
STRB
SDI PIO RST
SYS IN WR, RD, DIR
SYS IN P CS, SDI FPGA CS
SYS IN STB
SYS IN PIORES
SDI-52
IC1540 EVR
SS SYPS3 RES
SS SYPS3 CMD
SS SYPS3 CK
SS SYPS3 CS0
SS SYPS3 CS1
IC1530
IC1512 EEPROM
SS BUS0 D0-7
IC1535
IC1536
IC1509 PIO
SS BUS0 A0-8 A12-15
A9-11
IC1533
IC1534
SYS A0-8 A12-15
(NC)
SYS A0-8
IC1537
IC1510
PIAS CS
VIOLA CS
VIOLA FPGA CS
NICE CS
TG CS
SDI FPGA CS
OPTION FPGA CS
SDI CS
CS DEC
IC1505
IC1528
SDI CS
SS BUS0 CS
STRB, DIR, RD, WR
IC1532
SS BUS0 DR
SS BUS0 STRB
SS BUS0 RD
SS BUS0 WR
SS PIO RST0
SS BUS0 CK0
SDI DIR
STRB
SDI RD
SDI WR
SDI PIO RST
CKO
RESET
IC1522
SS RST0
IC1538
PIAS RESET
VIOLA RESET
VIOLA RESET2
NICE RESET
TG RESET
MASTER RESET
IC1539
IC1511
PIAS CPU CK
VIOLA CPU CK
NICE CPU CK
TG CPU CK
SUM CPU CK
OPTION FPGA CPU CK
CPU CK
IC1531
2/3 IC1514 (CHARA)
CONFIG RESET
3/3 IC700/CN1-69 (JTAG)
IC1538
PIAS BUSY
VIOLA BUSY
NICE BUSY
TG BUSY
BUSY
SS BUS0 BUSY
1/3, 2/3, 3/3 SS I/F
SYS A0-8, CPU CK
RD, WR, DIR
CS, STRB, RST
BUSY
A0-2
XCS
XRD
XWR
XCLR
XDIS
IC1531
IC1530
IC1512 EEPROM
Q1500, 1513
REG
PIO AU PLL
DPB CF
IC1546
CFO
CF1
CF2
IC1547
REF AU ID0
REF AU ID1
REF AU ID2
TG DET
H 625 3V
H 625 5V
IC1545
BUFF H 525 5V
H 525 5V
INPUT REF SEL
D1 LOCK
L AGC ON
H SDTI IN
H HDSDI IN
COMPST AD INH
H 4FSC FREE
3/3 IC1430 (DELAY)
2/3 IC902 (NICE)
3/3 IC1226 (TG)
2/3 IC701 (VIOLA)
2/3 IC714 (FPGA 1)
1/3 Q303, 304 (FOR Y A/D)
2/3 IC945, 947 (FOR B-Y A/D)
2/3 Q904, 905, C944 (FOR R-Y A/D)
3/3 Q1207, 1208 (FOR SYNC)
3/3 IC1231, 1253 (FOR SYNC)
2/3 Q906-909 (CLAMP)
1/3 Q115 (FOR V AD)
1/3 IC117, 119 (BURST KILLER TG)
2/3 C952 (FOR NICE)
3/3 IC1212 (FOR TG)
3/3 IC1226 (TG)
3/3 IC1430 (AUD FLD ID GEN)
2/3 IC917 (FOR X900/901)
3/3 IC1235 (FOR PHASE COMP)
1/3 IC139 (FOR AGC)
3/3 IC1118, 1119 (FOR SYNC)
3/3 IC1220, 1250 (PHASE COMP)
1/3 IC120 (V A/D)
3/3 IC1238 (FOR SYNC)
3/3 IC1216 (1ST FLD DET)
IC1509 PIO
IC1117
CF DET INH
REF CONT0
REF CONT1
PB0
PB1
PC0
PC1
L PP
L INTERACE
L NON STD
H SD SDI IN
3/3 IC1216 (1ST FLD DET)
3/3 IC1120 (FOR SYNC)
2/3 IC1527, 1544 (FOR CHARA)
3/3 IC1429 (AUD FLD ID GEN)
2/3 IC701 (VIOLA)
3/3 IC1236 (FOR X1203)
2/3 IC703-705 (LATCH)
IC1129 (FOR SYNC)
IC712 (FOR SYNC)
JTST MODE
Q700
DEC VCO ADJ
ENC1 VCO ADJ
ENC2 VCO ADJ
AGC LEVEL
MANUAL LEVEL
GAIN LEVEL
INPUT CF DET
CF OFFSET
PEDESTAL
VIDEO PHASE
Y INPUT LEVEL
R-Y INPUT LEVEL
B-Y INPUT LEVEL
Y/R-Y DELAY
Y/B-Y DELAY
VIDEO OUTPUT LEVEL
Y OUTPUT LEVEL
R-Y OUTPUT LEVEL
B-Y OUTPUT LEVEL
INT 4FSC FREQ
NON STD FREQ
1ST FLD DET
DPR CLK DELAY
H1F CLK DELAY
HPR CLK DELAY
PP CLK DELAY
1/3 IC130 (AGC ERROR AMP)
1/3 IC139 (FOR AGC)
1/3 IC121 (SYNC DELAY)
1/3 IC142 (PEDESTAL DC DET)
1/3 IC519 (SYNC SEP)
1/3 IC515 (BUFF FOR Y A/D)
1/3 IC511 (BUFF FOR PIAS)
1/3 IC507 (BUFF FOR PIAS)
2/3 C902 (NICE)
2/3 C920 (3CH D/A)
3/3 IC1238 (FOR SYNC)
3/3 IC1221 (BUFF FOR PHASE COMP)
3/3 IC1244 (1ST FLD DET)
3/3 IC1427 (DELAY)
3/3 IC1428 (DELAY)
3/3 IC1426 (DELAY)
3/3 IC1426 (DELAY)
JTAG
JTST MODE
SDI TDO
TD4
TD5
TCK1
TMS1
TRST1
JTEST1
MASTER RESET
JTEST
INIT FPGA
Q1501
Q12 (FOR V A/D, YA/D)
IC1226 (2/2) TG
IC313 (2/2) PIAS
IC701 (2/2) VIOLA
IC716
IC715 FLASH MEM
IC714 (2/2) FPGA 1
IC700 (2/2) FPGA 0
IC902 (2/2) NICE
ISP IC716
FPGA TDO
CCLK
INIT
DONE
PROGRAM
H JTAG CONFIG
Q1107
CONFIG RESET
FACTORY USE
ISP TDI
ISP TCK
ISP TMS
ISP TDO
SDI-52

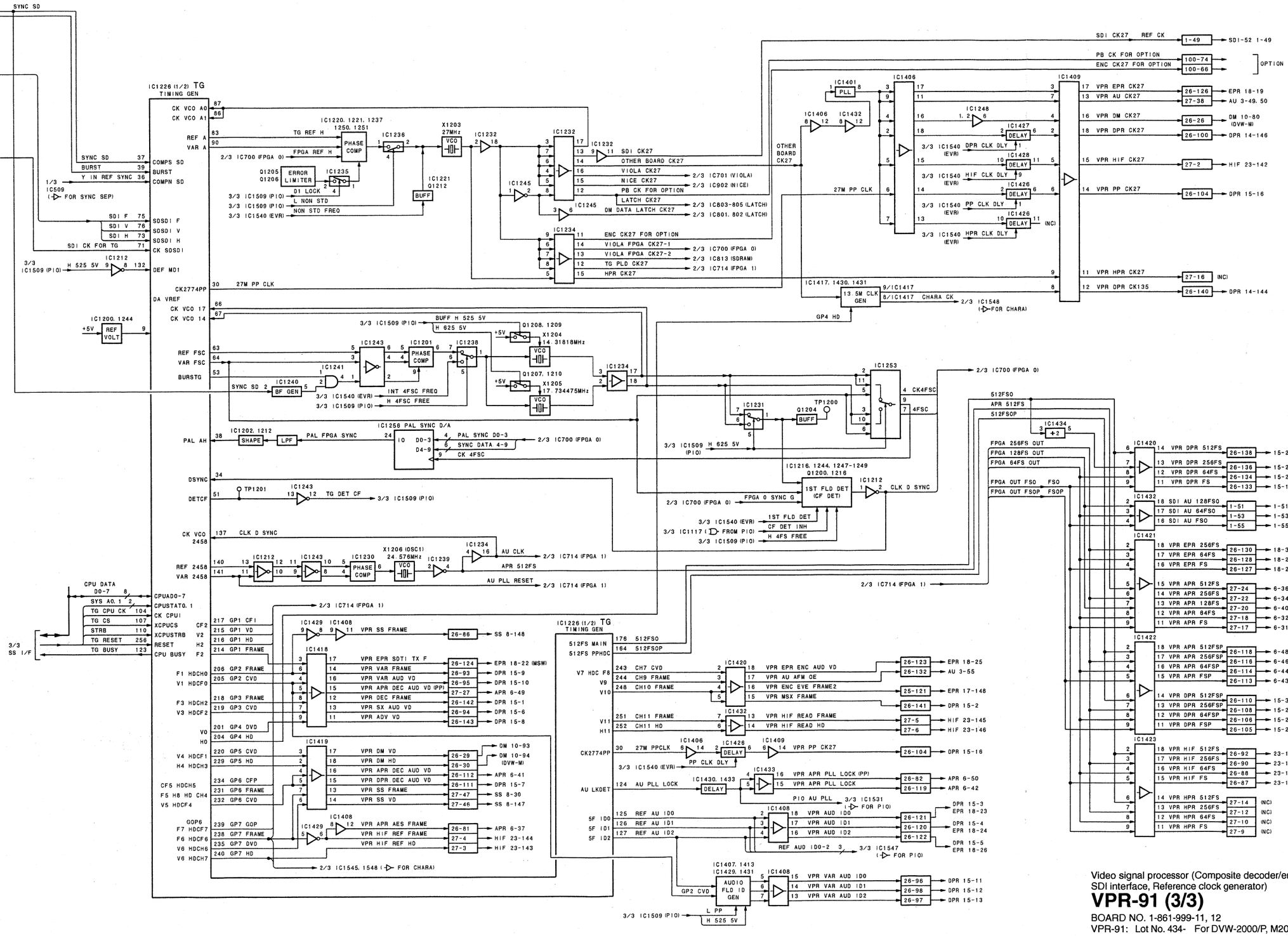

Video signal processor (Composite decoder/encoder, Component A-D/D-A, SDI interface, Reference clock generator)

VPR-91 (3/3)

BOARD NO. 1-861-999-11, 12

VPR-91: Lot No. 434- For DVW-2000/P, M2000/P

Section 4
Board Layouts

Board Layout Index

		Page
1.	1P50A973 (VR-300)	*
A.	AC013AA (KY-465)	*
	AC014AA (VR-262)	*
	AC027A (KY-570)	*
	AE-31	4-3
	AE-31H	4-5
	APR-52	4-6
	AU-272	4-10
C.	CCM-15	*
	CL-29	4-11
	CP-350	4-13
	CP-351	4-12
	CP-371	4-14
	CUE-13	4-15
D.	DIF-134	4-16
	DIO-65	4-17
	DM-123	4-18
	DPR-155	4-23
	DPR-194	4-26
	DPR-195	4-26
	DPR-208	4-27
	DPR-229	4-29
	DR-414	4-32
	DR-508	4-34
	DSP-109	4-36
	DT-47	4-37
	DU-107	*
	DU-178	4-24
E.	EPR-1	4-39
	EQ-84	4-42
F.	FP-133	4-45
	FP-134	4-46
	F248B054 (FED Driver)	*
H.	HIF-1	4-47
	HN-268	*
	HP-101	4-54
	HPR-1	4-51
I.	IF-885	4-54
	IF-886	4-54
K.	KY-464 (MBJ834)	*
	KY-465 (AC013AA)	*
	KY-569 (MBJ907B)	*
	KY-570 (AC027A)	*
L.	LED-357	4-55
	LP-81	4-55
M.	MB-884	4-56
	MBJ834 (KY-464)	*
	MBJ907B (KY-569)	*
P.	PC-70	*
	PTC-99	*
	PTC-101	*
	PTC-102	*
R.	RC-89H	4-8
	RX-80	*
S.	SDI-52	4-58
	SDI-63	*
	SE-606/606A	4-17
	SS-89	4-61
	SW-1106	4-64
	SWC-40	4-64
T.	TC-104	4-64
	TR-119	*
	TR-120	*
	TX-96	*
V.	VN-13	4-65
	VPR-64	4-68
	VPR-91	4-72
	VR-262 (AC014AA)	*
	VR-300 (1P50A973)	*

*：この基板は，本章に掲載していません。
*: The board layout of this board is not described in this manual.

Index

System configuration	Board name	Circuit function
Digital process	DPR-155 DPR-229	Decoder (digital PB) processor (ECC outer decoder, Bit reduction decoder, Audio jog DSP)
	DPR-194 DPR-195 DPR-208	ECC outer decoder
	EPR-1	Digital BETACAM/MPEG IMX encoder (digital REC) processor (Bit reduction encoder, ECC outer encoder, MPEG SDTI-CP input, MPEG SDTI-CP output)
	DIF-134	HDCAM SDTI interface
	HIF-1	HD video signal processor (Video slow process, Video process down converter, Video process up converter)
	HPR-1	HD video signal processor (Input filter, Bit rate reduction encorder, ECC encoder, Bit rate reduction decoder, Concealment, Output filter)
	IF-886	Video stream, Audio signal interface
	RX-80	HD SDI input
	SDI-52	SD SDI interface
	SDI-63	HD SDI interface
	TX-96	HD SDI output
	VN-13	Network interface
Video process	VPR-64 VPR-91	Video signal processor (Composite decoder/encoder, Component A-D/D-A, SDI interface, Reference clock generator)
	DM-123	Analog BETACAM video PB (RF demodulator, TBC)
	DSP-109	Proxy audio/video signal processor
Audio process	APR-52	Audio signal processor, AES/EBU interface, Audio signal A-D/D-A
	AE-31 AE-31H	Analog BETACAM audio (LAU) PB EQ
	AU-272	Analog BETACAM audio (LAU and AFM) PB circuit
	CUE-13	Cue REC/PB
	RC-89H	Audio rate converter
RF process	EQ-84	RF equalizer, ECC inner decoder
System/servo control	SS-89	System control, Servo control
	DR-414 DR-508	Solenoid drivers (Pinch, Brakes, Cleaning), Motor drivers (Drum, Capstan, Reels, Threading, Reel shift, Cassette up/down), REC inhibit sensors, Reel position sensors
	DT-47	DT driver
	TC-104	TC REC/PB circuit, TC/full erase oscillator
Mechanical deck driver/sensor	CCM-15	Threading motor
	DU-107	Demagnetization head
	HN-268	Pinch and Cleaning sloenoids connection, Tape end sensor connection
	PTC-99	Cassette's holes sensor
	PTC-102	Threading FG
	SE-606/606A	Loop antenna board
	TR-119	S tension sensor
	TR-120	T tension sensor, Threading-end and Unthreading-end sensors
Cassette compartment	LP-81	Lamp of cassette compartment
	PC-70	Cassette-in sensors, Cassette size sensor
	CL-29	Cassette up/down motor, Cassette down sensors

System configuration	Board name	Circuit function
Front panel	DIO-65	Connection board, Memory label reader/writer
	FP-133	Memory stick slot and interface, NV-RAMs, Switch panel function (Switches, Control panel connection)
	FP-134	Memory card slot
	FED Driver (F248B054)	FED Driver
	HP-101	Upper control panel function (PHONES)
	KY-464 (MBJ834) KY-569 (MBJ907B)	Lower control panel function (Audio signal selection switches, Menu control switches)
	KY-465 (AC013AA) KY-570 (AC027A)	Lower control panel function (Filed emission display, Audio setting display, Tape transport switches, Editing control switches, CONTROL PANEL connector)
	LED-357	Upper control panel function (Format indicators)
	PTC-101	Search dial
	SWC-40 SW-1106	Upper control panel function (REMOTE, EJECT)
	VR-262 (AC014AA) VR-300 (1P50A973)	Lower control panel function (Audio PB level VRs)
	VR-262 (AC014AA) VR-300 (1P50A973)	Lower control panel function (Audio REC level VRs)
Connector panel	CP-350	Connector board (Analog video)
	CP-351	Connector board (Analog audio, Monitor, Time code)
	CP-371	Connector board (Digital audio (AES/EBU), remote control connectors)
	IF-885	Connector board (Ethernet)
Other	MB-884	Motherboard

4-2

AE-31 (1-677-287-11)

C100	*E2	C706	*B2	Q207	*D3	R229	D3	R712	*B2
C101	E1	C707	*B3	Q208	*D3	R230	D3	R713	*B3
C102	E1	C800	C5	Q400	*B5	R231	D3	R714	A2
C103	*E1	C801	C4	Q401	*D4	R232	D3	R715	A3
C104	E1	C802	C4	Q402	*D4	R233	*C3	R716	*B2
C105	*E1	C803	*D4	Q403	*F4	R234	*C3	R717	*B3
C106	E1	C804	*D4	Q404	*F4	R235	D2	R800	*C5
C107	E2	C805	*F2	Q500	F2	R236	*D2	R801	*C4
C108	C1	C806	C4	Q501	F2	R237	D2	R802	*C4
C109	D2	C852	B4	Q502	F2	R238	*D2	R803	D3
C110	D1	C853	B1	Q503	F1	R239	D2	R804	*C3
C111	D1	C855	A5	Q504	*F2	R240	*D3	R805	*C3
C112	D2	C856	B3	Q505	*F2	R241	*C2	R806	*C3
C113	D2	C860	*D4	Q600	A5	R242	C2	R807	*C4
C114	D2	C863	*A5	Q601	B6	R243	D2	R808	*C4
C115	D1	C864	C4	Q602	A5	R244	C2	R853	*C4
C116	*C2	C865	C4	Q603	*A5	R245	C2	R857	*C4
C117	D1	C866	C4	Q604	*A6	R246	C2	R858	*C4
C118	D1	C867	C4	Q605	*A6	R247	*C3	R859	*C4
C119	D1	C868	C4	Q606	*A6	R248	C2	R860	*C4
C120	D1	C869	C4	Q700	*B2	R249	C2	R861	*C4
C121	C1			Q701	*B3	R250	C3		
C122	C1	CN100	F2	Q800	C4	R251	*C2	RV100	E2
C123	C1	CN200	F3	Q801	C4	R252	*C3	RV101	E1
C124	C1	CN600	C6	Q802	*D4	R253	*C2	RV102	D1
C125	C1	CN800	A2	Q803	C3	R254	*C3	RV103	C2
C126	C1			Q804	C3	R300	B4	RV200	E3
C200	*D3	D400	D4	Q805	C3	R301	B4	RV201	E2
C201	*E3	D500	*F1	Q806	C3	R302	C3	RV202	E2
C202	*E3	D800	C3	Q850	C4	R303	C4	RV203	D2
C203	*E3	D801	C3	Q851	C4	R304	C3	RV204	C3
C204	*E3	D802	C3			R305	*B4	RV205	D3
C205	E3	D850	*B5	R100	*E2	R306	*B3	RV300	B4
C206	*E3	D851	*B3	R101	E1	R307	B4	RV400	B5
C207	E3			R102	E1	R308	B3	RV401	C5
C208	E3	E100	E3	R103	E1	R400	B5	RV500	F1
C209	D3	E500	F4	R104	E1	R401	B5	RV700	A2
C210	D3	E600	C6	R105	*E1	R402	B5	RV701	A3
C211	D3			R106	*D1	R403	B5	RV702	A2
C212	D3	IC100	*E2	R107	*E1	R404	B5	RV703	A3
C213	D3	IC102	*D1	R108	*E1	R405	*B5		
C214	D3	IC103	*C1	R109	D1	R406	B5	S100	F1
C215	D3	IC104	*C1	R110	D1	R407	B5	S200	F2
C216	D3	IC200	*E3	R111	D1	R408	C5		
C217	*C3	IC201	*D2	R112	D1	R409	C5	T500	F3
C218	D2	IC202	*C2	R113	D1	R410	C5	T600	A6
C219	D2	IC203	*C2	R114	D1	R411	C5		
C220	D2	IC300	*B4	R115	D1	R412	B5	TP100	C2
C221	D2	IC301	*B4	R116	D1	R413	*D4	TP200	E3
C222	C2	IC400	*C5	R117	*C2	R414	*D4	TP201	E3
C223	C2	IC401	*C5	R118	*C2	R415	*E4	TP202	C3
C224	C2	IC500	*F2	R119	D1	R416	E4	TP300	B5
C225	C3	IC700	*B2	R120	*D1	R417	*F4	TP400	D4
C226	C2	IC701	*A2	R121	D1	R418	*F4	TP401	E4
C227	C3	IC702	*A3	R122	*D1	R419	*F3	TP500	F3
C300	B4	IC800	D4	R123	D1	R500	F2	TP601	C6
C301	C4	IC801	C4	R124	*D1	R501	F2		
C302	C3	IC854	B5	R125	*C1	R502	F2	*:B SIDE	
C303	B4	IC855	B2	R126	C1	R503	F2		
C304	B3	IC857	D4	R127	D1	R504	F1		
C400	*B5	IC858	C4	R128	C1	R505	F2		
C401	C5	IC859	C4	R129	C1	R506	F1		
C402	C5	IC860	C4	R130	C1	R507	*F1		
C403	C5	IC861	C4	R131	C1	R508	*F1		
C404	C5	IC862	C4	R132	*C1	R509	*F2		
C405	B5	IC863	C4	R133	C1	R510	*F2		
C406	C5			R134	C1	R511	*F3		
C407	D4	L500	F2	R135	C1	R512	*F3		
C408	E4	L600	A5	R136	*C1	R513	F2		
C409	*E3	L850	B4	R137	*C1	R600	A6		
C410	F4	L851	B1	R138	*C1	R601	A5		
C500	F2			R139	*C1	R602	A5		
C501	*F1	LV400	E4	R140	*D1	R603	A6		
C502	F1	LV600	B6	R200	*E3	R604	*A5		
C503	*F2			R201	*E3	R605	*A5		
C504	*F2	PS850	B4	R203	E3	R606	*A6		
C505	F3	PS851	A1	R205	*E3	R607	*A6		
C506	*F3	PS852	A4	R207	E3	R608	*C6		
C507	F4			R210	E3	R609	A5		
C600	A5	Q100	*E1	R212	E3	R610	A6		
C601	*A5	Q101	*D2	R215	E3	R700	*A2		
C602	*A5	Q102	*D2	R216	E2	R701	*A2		
C603	A6	Q103	*D2	R218	*E2	R702	*A2		
C604	B6	Q104	*D2	R220	*E2	R703	*A2		
C605	B6	Q105	*D1	R221	*D2	R704	A2		
C607	*A6	Q200	*E3	R222	*E2	R705	A3		
C700	B2	Q201	E3	R223	*E2	R706	A2		
C701	A3	Q202	*E2	R224	*D2	R707	B3		
C702	A2	Q203	*E2	R225	D3	R708	*A2		
C703	A3	Q204	*E2	R226	D3	R709	*A3		
C704	*B2	Q205	*D3	R227	D3	R710	A2		
C705	*B3	Q206	*D3	R228	D3	R711	A2		

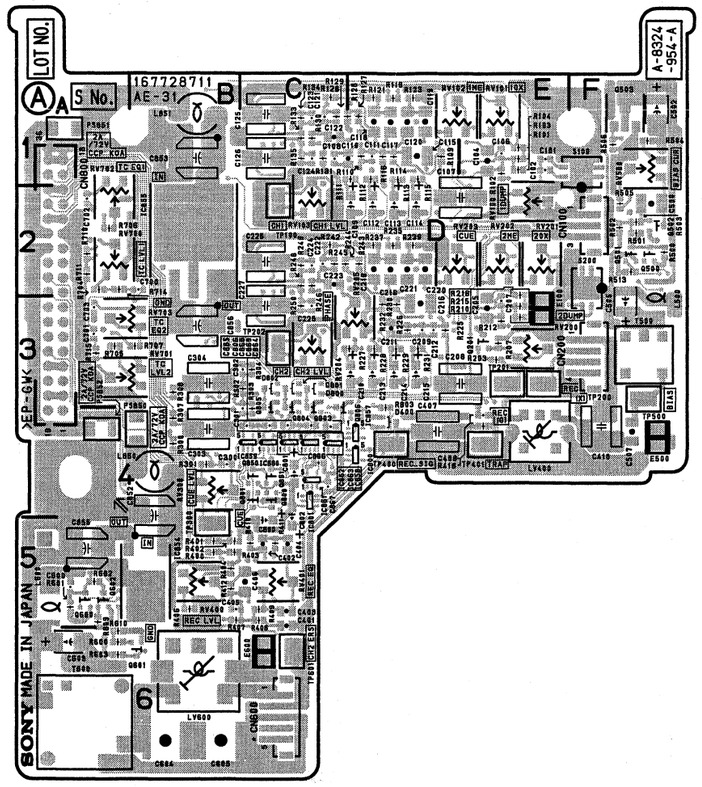

AE-31 -A SIDE-
SUFFIX: -11

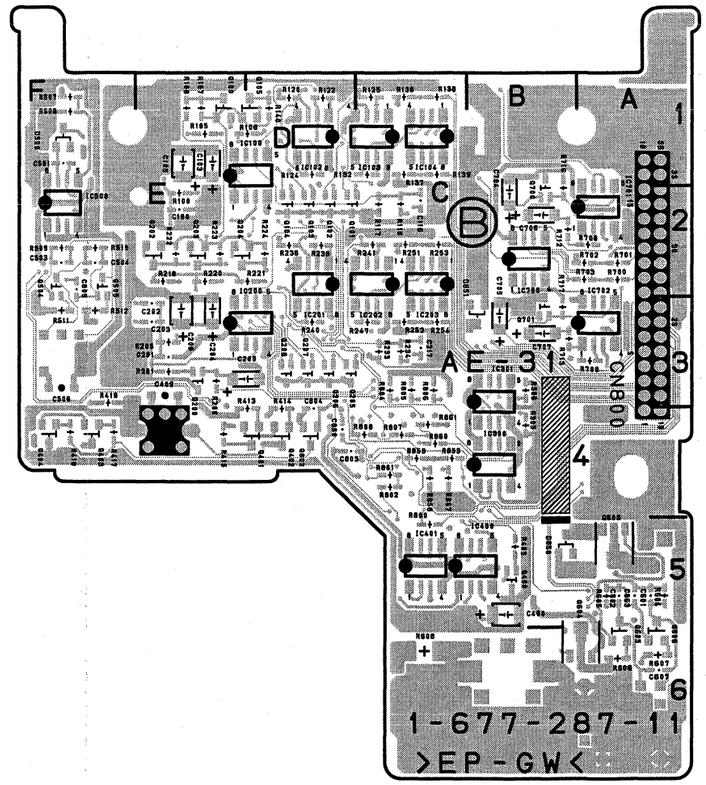

AE-31 -B SIDE-
SUFFIX: -11

AE-31H (1-677-287-22)

C100	*E2	C703	A3	Q105	*D1	R220	*E2	R704	A3
C101	E1	C704	*B2	Q200	*E3	R221	*D2	R705	B3
C102	E1	C705	*B3	Q201	E3	R222	*E2	R706	A2
C103	E1	C706	*B2	Q202	*E2	R223	*E2	R707	A3
C104	E1	C707	*B3	Q203	*E2	R224	*D2	R708	*A2
C106	E2	C708	A2	Q204	*E2	R225	E3	R709	*A3
C107	E2	C709	A3	Q205	*D3	R226	D3	R710	A2
C108	C1	C800	C5	Q206	*D3	R227	D3	R711	A2
C109	D2	C801	C4	Q207	*D3	R228	D3	R712	*B2
C110	C1	C804	*D4	Q208	*D3	R229	D3	R713	*B3
C111	D1	C805	*F2	Q400	*B5	R230	D3	R714	A3
C112	D2	C852	B5	Q401	*E4	R231	D3	R715	B3
C113	D2	C853	B1	Q402	*D4	R232	D3	R716	*B2
C114	D2	C855	A5	Q403	*F4	R233	*C3	R717	*B3
C115	D1	C856	B3	Q404	*F4	R234	*C3	R800	*C5
C116	*C2	C860	*D4	Q405	*C5	R235	D2	R801	*C4
C117	D1	C863	*A5	Q501	F2	R236	*D2	R803	D4
C118	D1	C864	C4	Q502	F2	R237	D2	R804	*C3
C119	D1	C865	C4	Q503	F1	R238	*D2	R805	*C3
C120	D1	C866	C4	Q504	*F2	R239	D2	R806	*C3
C121	C1	C867	C4	Q505	*F2	R240	*D3	R807	*C4
C122	C1	C868	C4	Q506	F2	R241	*C2	R808	*C4
C123	C1	C869	C4	Q507	F1	R242	C2	R853	*C4
C124	C1	C870	B5	Q600	A5	R243	D2	R857	*C4
C125	C1	C871	B1	Q602	A5	R244	C2	R858	*C4
C126	C1	C872	A5	Q603	*A5	R245	C2	R859	*C4
C127	*C4	C873	B3	Q605	*A6	R246	C2	R860	*C4
C128	*D4			Q606	*A5	R247	*C3	R861	*C4
C200	*D3	CN100	F2	Q607	A5	R248	C2		
C201	*E3	CN200	F3	Q700	*B2	R249	C2	RV100	E2
C202	*E3	CN600	C6	Q701	*B3	R250	C3	RV101	E1
C203	*E3	CN800	A2	Q800	C4	R251	*C2	RV102	E1
C204	E3			Q801	C4	R252	*C3	RV103	C2
C205	E3	D400	D4	Q802	*D4	R300	B4	RV200	E3
C207	E3	D500	*F1	Q803	C3	R301	B4	RV201	E2
C208	E3	D501	*F1	Q804	C3	R302	C3	RV202	E2
C209	D3	D800	C3	Q805	C3	R303	C4	RV203	E2
C210	D3	D801	C3	Q806	C4	R304	C3	RV204	C3
C211	D3	D802	C3	Q850	C4	R305	*B4	RV205	D3
C212	D3	D850	*B5	Q851	C4	R306	*B3	RV300	B4
C213	D3	D851	*B3			R309	C3	RV400	B5
C214	D3			R100	*E2	R400	B5	RV401	C5
C215	D3	E100	E3	R101	*E1	R401	B5	RV500	F1
C216	D3	E500	F4	R102	E2	R402	*B5	RV700	A2
C217	*C3	E600	C6	R103	*E1	R403	B5	RV701	A3
C218	D2			R104	*E1	R404	B5	RV702	A2
C219	D2	IC100	*E2	R105	*E1	R405	*B5	RV703	A3
C220	D2	IC102	*D1	R106	*D1	R406	B5		
C221	D2	IC103	*C1	R107	*E1	R407	B5	S100	F1
C222	C2	IC104	*C1	R108	*E1	R408	C5	S200	F2
C223	C2	IC105	C4	R109	E1	R409	C5		
C224	C2	IC106	D4	R110	D1	R410	C5	T500	F3
C225	C3	IC200	*E3	R111	D1	R411	C5	T600	A6
C226	C2	IC201	*D2	R112	D1	R412	B5		
C227	C3	IC202	*C2	R113	D1	R413	*E3	TP100	C2
C228	E4	IC203	*C2	R114	D1	R414	*D3	TP200	E3
C300	B4	IC300	*B4	R115	D1	R415	*E4	TP201	E3
C301	C4	IC301	*B4	R116	D1	R416	E4	TP202	C3
C302	C3	IC400	*C5	R117	*C2	R417	*F4	TP300	B5
C303	B4	IC401	*C5	R118	*C2	R418	*F4	TP400	D4
C304	B3	IC500	*F2	R119	D1	R419	*F4	TP401	E4
C400	*B5	IC600	A6	R120	*D1	R420	*C5	TP500	F3
C401	C6	IC700	*B2	R121	D1	R421	*C5	TP601	C6
C402	C5	IC701	*A2	R122	*D1	R500	F2		
C403	C5	IC702	*A3	R123	D1	R501	F2	*:B SIDE	
C404	C5	IC854	B5	R124	*D1	R502	F2		
C405	B5	IC855	B2	R125	*C1	R503	F2		
C406	C5	IC857	D4	R126	C1	R504	F1		
C407	D4	IC858	C4	R127	D1	R505	F2		
C408	E4	IC859	C4	R128	C1	R506	F1		
C409	*E3	IC860	C4	R129	C1	R507	*F1		
C410	F4	IC861	C4	R130	C1	R508	*F1		
C500	F2	IC862	C4	R131	C1	R509	*F2		
C501	*F1	IC863	C4	R132	*C1	R510	*F2		
C502	F1			R133	C1	R511	*F3		
C503	*F2	L500	F2	R134	C1	R512	*F3		
C504	*F2	L600	A6	R135	C1	R513	F2		
C505	F3	L850	B4	R136	*C1	R514	*F2		
C506	*F3	L851	B1	R137	*C1	R515	F1		
C507	F3			R140	*D1	R601	A5		
C600	A5	LV400	E4	R141	C1	R602	A5		
C601	*A5	LV600	B6	R200	*E3	R604	*A5		
C602	*A5			R201	*E3	R605	*A5		
C603	A6	PS850	B4	R202	C2	R606	*A6		
C604	B6	PS851	A1	R203	*E4	R607	*A6		
C605	B6	PS852	A4	R205	*E3	R608	*C6		
C606	*A6			R207	E3	R609	A5		
C607	*A6	Q100	*E1	R210	*E3	R610	A6		
C608	A6	Q101	*D2	R212	E3	R700	*A2		
C700	B3	Q102	*D2	R215	*E3	R701	*A2		
C701	B3	Q103	*D2	R216	*E3	R702	*A2		
C702	A2	Q104	*D2	R218	*E2	R703	*A2		

AE-31H
SUFFIX: -22

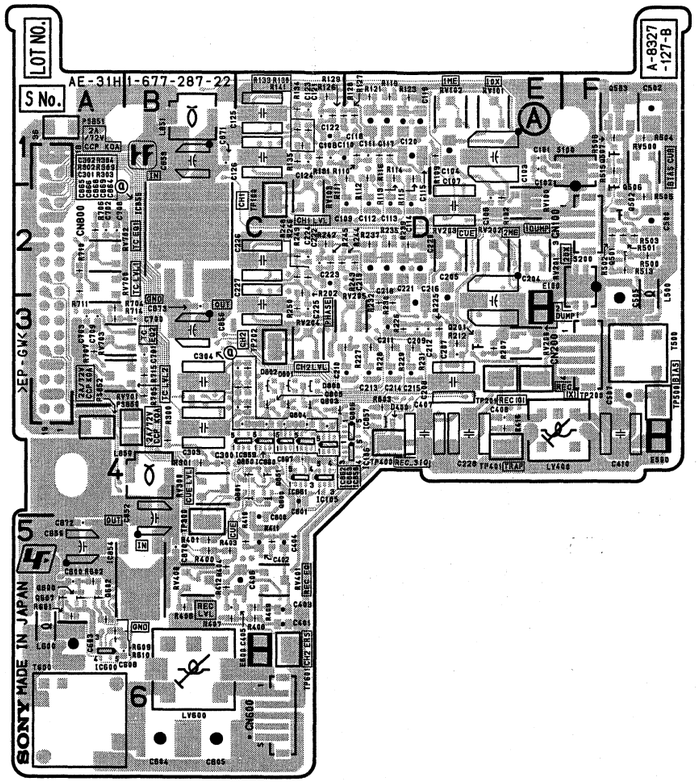

AE-31H -A SIDE-
SUFFIX: -22

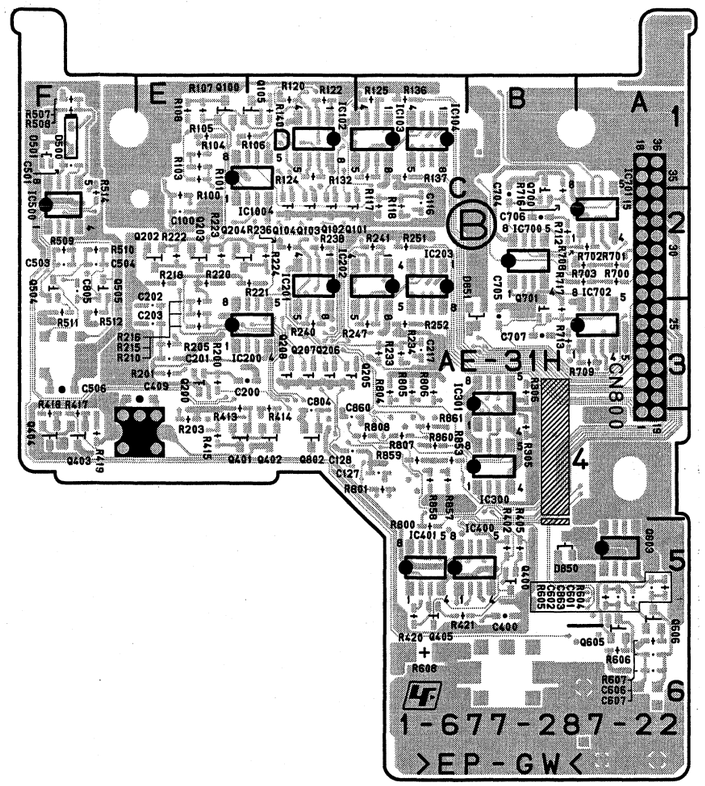

AE-31H -B SIDE-
SUFFIX: -22

AE-31H
SUFFIX: -21

AE-31H (1-677-287-21)

C100	*E2	C702	A2	Q204	*E2	R226	D3	R709	*A3
C101	E1	C703	A3	Q205	*D3	R227	D3	R710	A2
C102	E1	C704	*B2	Q206	*D3	R228	D3	R711	A2
C103	*E1	C705	*B3	Q207	*D3	R229	D3	R712	*B2
C104	E1	C706	*B2	Q208	*D3	R230	D3	R713	*B3
C105	*E1	C707	*B3	Q400	*B5	R231	D3	R714	A2
C106	E1	C800	C5	Q401	*E4	R232	D3	R715	A3
C107	E2	C801	C4	Q402	*D4	R233	*C3	R716	*B2
C108	C1	C804	*D4	Q403	*F4	R234	*C3	R717	*B3
C109	D2	C805	*F2	Q404	*F4	R235	D2	R800	*C5
C110	D1	C852	B4	Q501	F2	R236	*D2	R801	*C4
C111	D1	C853	B1	Q502	F2	R237	D2	R803	D4
C112	D2	C855	A5	Q503	F1	R238	*D2	R804	*C3
C113	D2	C856	B3	Q504	*F2	R239	D2	R805	*C3
C114	D2	C860	*D4	Q505	*F2	R240	*D3	R806	*C3
C115	D1	C863	*A5	Q506	F2	R241	*C2	R807	*C4
C116	*C2	C864	C4	Q507	F1	R242	C2	R808	*C4
C117	D1	C865	C4	Q600	A5	R243	D2	R853	*C4
C118	D1	C866	C4	Q602	A5	R244	C2	R857	*C4
C119	D1	C867	C4	Q603	*A5	R245	C2	R858	*C4
C120	D1	C868	C4	Q605	*A5	R246	C2	R859	*C4
C121	C1	C869	C4	Q606	*A5	R247	*C3	R860	*C4
C122	C1			Q607	A5	R248	C2	R861	*C4
C123	C1	CN100	F2	Q700	*B2	R249	C2		
C124	C1	CN200	F3	Q701	*B3	R250	C3	RV100	E2
C125	C1	CN600	C6	Q800	C4	R251	*C2	RV101	E1
C126	C1	CN800	A2	Q801	C4	R252	*C3	RV102	D1
C127	*C4			Q802	*D4	R253	*C2	RV103	C2
C128	*D4	D400	D4	Q803	C3	R254	*C3	RV200	E3
C200	*D3	D500	*F1	Q804	C3	R300	B4	RV201	E2
C201	*E3	D501	*F1	Q805	C3	R301	B4	RV202	E2
C202	*E3	D800	C3	Q806	C4	R302	C3	RV203	D2
C203	*E3	D801	C3	Q850	C4	R303	C4	RV204	C3
C204	*E3	D802	C3	Q851	C4	R304	C3	RV205	D3
C205	E3	D850	*B5			R305	*B4	RV300	B4
C206	*E3	D851	*B3	R100	*E2	R306	*B3	RV400	B5
C207	E3			R101	E1	R307	B4	RV401	C5
C208	E3	E100	E3	R102	E1	R308	B3	RV500	F1
C209	D3	E500	F4	R103	E1	R400	B5	RV700	A2
C210	D3	E600	C6	R104	E1	R401	B5	RV701	A3
C211	D3			R105	*E1	R402	B5	RV702	A2
C212	D3	IC100	*E2	R106	*D1	R403	B5	RV703	A3
C213	D3	IC102	*D1	R107	*E1	R404	B5		
C214	D3	IC103	*C1	R108	*E1	R405	*B5	S100	F1
C215	D3	IC104	*C1	R109	D1	R406	B5	S200	F2
C216	D3	IC105	C4	R110	D1	R407	B5		
C217	*C3	IC106	D4	R111	D1	R408	C5	T500	F3
C218	D2	IC200	*E3	R112	D1	R409	C5	T600	A6
C219	D2	IC201	*D2	R113	D1	R410	C5		
C220	D2	IC202	*C2	R114	D1	R411	C5	TP100	C2
C221	D2	IC203	*C2	R115	D1	R412	B5	TP200	E3
C222	C2	IC300	*B4	R116	D1	R413	*E3	TP201	E3
C223	C2	IC301	*B4	R117	*C2	R414	*D3	TP202	C3
C224	C2	IC400	*C5	R118	*C2	R415	*E4	TP300	B5
C225	C3	IC401	*C5	R119	D1	R416	E4	TP400	D4
C226	C2	IC500	*F2	R120	*D1	R417	*F4	TP401	E4
C227	C3	IC600	A6	R121	D1	R418	*F4	TP500	F3
C228	E4	IC700	*B2	R122	*D1	R419	*F4	TP601	C6
C300	B4	IC701	*A2	R123	D1	R500	F2		
C301	C4	IC702	*A3	R124	*D1	R501	F2	*:B SIDE	
C302	C3	IC854	B5	R125	*C1	R502	F2		
C303	B4	IC855	B2	R126	C1	R503	F2		
C304	B3	IC857	D4	R127	D1	R504	F1		
C400	*B5	IC858	C4	R128	C1	R505	F2		
C401	C5	IC859	C4	R129	C1	R506	F1		
C402	C5	IC860	C4	R130	C1	R507	*F1		
C403	C5	IC861	C4	R131	C1	R508	*F1		
C404	C5	IC862	C4	R132	*C1	R509	*F2		
C405	B5	IC863	C4	R133	C1	R510	*F2		
C406	C5			R134	C1	R511	*F3		
C407	D4	L500	F2	R135	C1	R512	*F3		
C408	E4	L600	A6	R136	*C1	R513	F2		
C409	*E3	L850	B4	R137	*C1	R514	*F2		
C410	F4	L851	B1	R138	*C1	R515	F1		
C500	F2			R139	*C1	R601	A5		
C501	*F1	LV400	E4	R140	*D1	R602	A5		
C502	F1	LV600	B6	R200	*E3	R604	*A5		
C503	*F2			R201	*E3	R605	*A5		
C504	*F2	PS850	B4	R203	E3	R606	*A6		
C505	F3	PS851	A1	R205	*E3	R607	*A6		
C506	*F3	PS852	A4	R207	E3	R608	*C6		
C507	F3			R210	E3	R609	A5		
C600	A5	Q100	*E1	R212	E3	R610	A6		
C601	*A5	Q101	*D2	R215	E3	R700	*A2		
C602	*A5	Q102	*D2	R216	E2	R701	*A2		
C603	A6	Q103	*D2	R218	*E2	R702	*A2		
C604	B6	Q104	*D2	R220	*E2	R703	*A2		
C605	B6	Q105	*D1	R221	*D2	R704	A2		
C607	*A6	Q200	*E3	R222	*E2	R705	A3		
C608	A6	Q201	E3	R223	*E2	R706	A2		
C700	B2	Q202	*E2	R224	*D2	R707	B3		
C701	A3	Q203	*E2	R225	D3	R708	*A2		

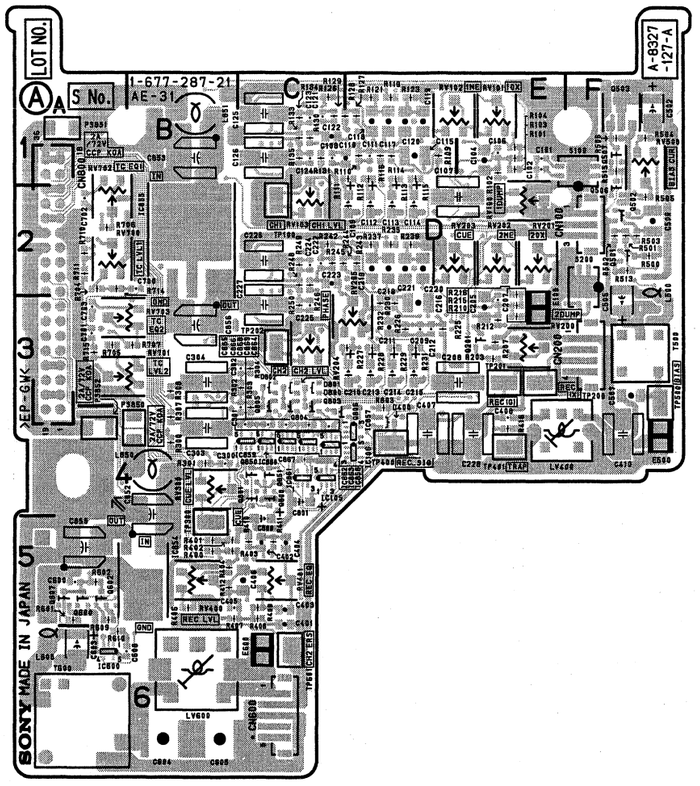

AE-31H -A SIDE-
SUFFIX: -21

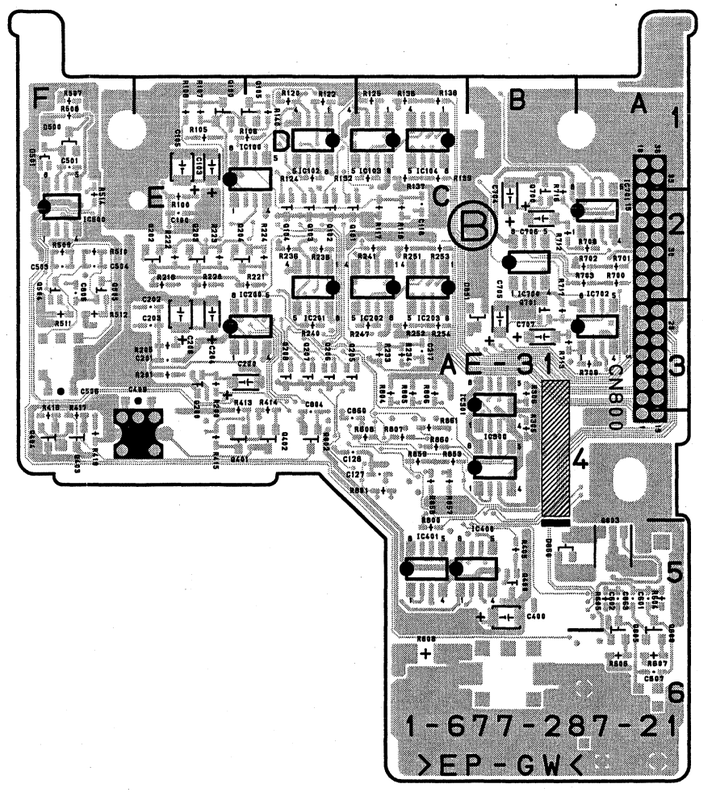

AE-31H -B SIDE-
SUFFIX: -21

APR-52 (1-677-274-16)

C100	P5	C302	*M4	C506	*K3	C703	*J3	C904	*F2	C1101	D2	C1607	*B4	CL1705	J5	E700	*A5	IC713	J4	IC1418	D4	Q405	*L5	R143	*P3	R245	N2	R356	*N2	R456	*M2	R576	*L3	R700	J1
C101	P5	C303	*M4	C507	*K2	C704	*J2	C905	*F2	C1102	*D1	C1608	B4	CL1706	J5	E800	*F5	IC714	J4	IC1419	*C2	Q406	*L2	R144	*P3	R246	*N3	R357	M2	R458	*L2	R577	*L3	R701	*J2
C102	*P4	C304	*M4	C508	K2	C705	*J2	C906	*F3	C1103	D1	C1609	*E1	CL1707	J5	E900	*K5	IC715	J4	IC1420	*C2	Q407	*M3	R145	*P3	R247	*N3	R358	M2	R459	L2	R578	*L3	R702	J2
C103	*P4	C305	*M4	C509	L2	C706	*J3	C907	*F2	C1104	D1	C1613	*D1	CL1708	H5	E1000	*P6	IC800	*J1	IC1423	D5	Q500	*L2	R146	*P3	R248	*N2	R359	*M2	R460	*L2	R580	*K4	R703	*J2
C104	*P4	C306	*M4	C510	L2	C707	*J2	C908	F2	C1119	D3	C1700	*F3	CL1709	H5			IC801	J2	IC1425	C3	Q501	*L2	R147	*P3	R249	*N3	R360	*M2	R461	L2	R581	*K4	R704	*H1
C105	*P4	C307	*N4	C511	K2	C708	J2	C909	F2	C1120	*D2	C1701	*F2	CL1710	H5	F1700	B5	IC803	H2	IC1427	A4	Q502	*K4	R148	*P2	R250	N2	R361	*M2	R462	*L2	R583	*L4	R705	J2
C106	*P4	C308	N3	C512	*K2	C709	J2	C910	F2	C1121	*D2	C1702	*H1	CL1711	H5	F1701	B5	IC804	H2	IC1428	*C5	Q504	*L2	R149	*P2	R251	*N2	R362	M2	R464	*L2	R584	*L4	R706	J2
C107	*P4	C309	M4	C513	*K2	C710	J2	C911	F2	C1122	*D2	C1703	*F1	CL1712	H5	F1702	B5	IC805	*H2	IC1429	*B3	Q505	*L2	R150	*P3	R252	*N2	R364	*N2	R465	*L2	R585	*L4	R707	*J2
C108	P3	C310	M5	C514	*L3	C711	J2	C912	*F2	C1123	*C1	C1704	*F3	CL1713	H5	F1703	A6	IC806	*H3	IC1431	*C4	Q600	*K2	R151	*P2	R253	*N2	R365	*N2	R466	*L2	R586	*L4	R708	H1
C109	P4	C311	*M3	C515	*L2	C712	*J2	C913	*F2	C1124	C2	C1705	*A5	CL1715	H5			IC807	H3	IC1434	B2	Q601	*K2	R153	P2	R255	*N2	R366	*M2	R467	*L2	R587	L2	R710	J5
C110	P5	C312	M3	C516	*L2	C713	*J2	C914	*F2	C1200	A1	C1706	*A5	CL1716	H5	IC100	*P5	IC808	*H3	IC1436	*C2	Q602	*K4	R154	*P3	R256	*N2	R367	M2	R468	*L1	R588	L2	R711	J5
C111	*P3	C313	M3	C517	*L3	C714	*J3	C915	*G2	C1205	B1	C1707	*F2	CL1717	H5	IC101	*N5	IC809	H4	IC1437	C5	Q604	*K2	R156	*P2	R257	N2	R368	*M2	R469	*L1	R590	K2	R712	J5
C112	P3	C314	*M3	C518	*K2	C715	*J2	C916	*G2	C1206	*D3	C1708	*A5	CL1718	H5	IC102	*P4	IC810	H4	IC1438	A3	Q605	*K2	R157	P2	R258	*N2	R369	M2	R470	*L2	R591	K2	R713	*J4
C113	P3	C315	*N3	C519	*K3	C716	*J2	C917	*G3	C1207	*D3	C1709	F1	CL1719	H5	IC103	*P3	IC811	*H3	IC1439	A3	Q700	*J2	R158	P2	R259	N2	R370	*M2	R471	*L2	R593	*K4	R714	*J2
C114	*P3	C316	M3	C520	K3	C717	*J3	C918	*F2	C1209	*A2	C1710	*A5	CL1720	*D5	IC104	P4	IC812	H4	IC1500	B5	Q701	*J2	R159	*P2	R260	*N2	R372	*M2	R483	M3	R594	*L4	R715	*H1
C115	*P3	C317	*M2	C521	K3	C718	*J2	C920	*F3	C1210	A1	C1711	F3	CL1721	*D5	IC105	P3	IC813	H4	IC1501	B4	Q702	*J4	R160	*P2	R261	N2	R373	*M2	R484	*M2	R601	K2	R716	*J2
C116	P3	C318	*M2	C522	L3	C719	*J3	C921	F3	C1211	A2	C1712	*A5	CL1728	*C5	IC106	P2	IC814	H4	IC1502	A5	Q704	*J2	R161	*P2	R262	*N2	R374	*M2	R485	*M2	R602	*K2	R720	*J2
C117	*P2	C319	*M3	C523	L3	C720	J3	C922	G3	C1213	B1	C1713	*A5			IC107	*P2	IC815	H4	IC1503	A4	Q705	*J2	R162	*P3	R264	*N2	R375	*M2	R486	*L3	R603	*J2	R721	*J2
C118	*P2	C320	*N2	C524	*K3	C721	J3	C923	G3	C1214	B2	C1714	F2	CN4	M6	IC108	P2	IC900	G1	IC1505	A5	Q800	*H2	R164	*P2	R265	*N2	R376	*M1	R487	*L2	R605	K2	R725	*J2
C119	*P3	C321	*N2	C525	*K4	C722	J3	C924	F3	C1215	*B2	C1716	*H1	CN5	H6	IC109	*P5	IC901	G1	IC1506	E3	Q801	*H2	R165	*P2	R266	*N2	R377	*M1	R488	L2	R606	K2	R726	*J2
C120	*P2	C322	*M2	C526	K3	C723	J3	C925	*F3	C1300	*E2	C1718	E4	CN6	C6	IC111	*P5	IC902	*G1	IC1507	E2	Q802	*H4	R166	*P2	R267	*N2	R378	*M2	R489	*L5	R607	*K2	R727	*J2
C121	*P2	C323	M2	C527	K3	C724	*J3	C926	F3	C1301	*E2	C1719	E4	CN1300	C1	IC202	*N4	IC903	F2	IC1508	E2	Q804	*H2	R167	P2	R268	*N1	R379	*M2	R490	*M5	R609	*K2	R728	*J2
C122	*P2	C324	M2	C528	K3	C725	J3	C927	*F3	C1302	*C2	C1720	*F3			IC203	*N3	IC904	F2	IC1509	A4	Q805	*H2	R168	*P2	R269	*N1	R380	*M1	R491	*M3	R610	K5	R731	*J2
C123	P2	C325	M1	C529	L3	C726	*J3	C928	F3	C1303	*D2	C1721	*F3	D100	*P4	IC204	N4	IC905	*F2	IC1600	B5	Q900	*G2	R169	P2	R270	*N2	R381	*M2	R492	*M3	R611	K5	R733	*J2
C124	P2	C326	*M2	C530	*K4	C727	J3	C929	F3	C1304	*D2	C1722	*E4	D101	*P4	IC205	N3	IC906	*F3	IC1601	B5	Q901	*F2	R170	*P2	R271	*N2	R382	*M2	R493	*M3	R612	K5	R734	*J2
C125	P1	C327	*M2	C531	*L3	C728	J3	C930	G3	C1305	*C2	C1723	N1	D102	*P4	IC206	N2	IC907	F3	IC1602	C5	Q902	*F4	R172	*P2	R283	N3	R383	M3	R494	M3	R613	*J4	R735	*J2
C126	*N2	C328	*M2	C532	*L4	C729	J3	C931	*F4	C1306	C1	C1724	*N1	D103	*P3	IC207	*N2	IC908	*F3	IC1603	*C5	Q904	*F2	R173	*P2	R284	*N2	R384	*N2	R495	*M3	R614	*K2	R736	J2
C127	*P2	C329	*M2	C533	K5	C730	*J4	C932	*G3	C1307	*D2	C1725	*F1	D104	*P2	IC209	*N5	IC909	F4	IC1604	*C5	Q905	*F2	R174	*P2	R285	*N2	R385	*M2	R500	L1	R616	*K2	R737	J2
C128	*N2	C330	*M2	C534	*K2	C731	*J3	C933	*G4	C1308	*D2	C1726	*F3	D105	*P2	IC211	*N5	IC910	F4	IC1605	*B5	Q1000	*G2	R175	*P2	R286	*N2	R386	*M3	R501	L2	R620	*J2	R738	J2
C129	*P2	C331	*M2	C535	*K3	C732	*J4	C934	F5	C1309	*E2	C1727	D5	D200	*N4	IC300	*M5	IC911	*F3	IC1606	C5	Q1001	*G2	R176	*P1	R287	N2	R387	*M2	R502	*K2	R621	*J2	R739	J2
C130	*P2	C332	*M2	C540	K2	C733	J5	C935	*F4	C1310	*D2	C1728	*F4	D201	*N4	IC301	*L5	IC912	G4	IC1607	B5	Q1002	*G4	R177	*P1	R288	*N3	R388	M2	R503	*K2	R625	*J2	R740	J2
C131	*P2	C333	*M2	C541	*K2	C734	*H4	C936	*F4	C1400	*D4	C1729	*K1	D202	*N4	IC302	*M4	IC913	G4	IC1608	B5	Q1004	*G2	R178	*P2	R289	*N5	R389	*M5	R504	*K1	R626	*J2	R741	*J3
C132	*P2	C334	*M2	C542	*K3	C735	*H4	C937	*F4	C1401	*D5	C1730	*K1	D203	*N3	IC303	*N3	IC914	F4	IC1609	D2	Q1005	*G2	R179	*P2	R290	*N5	R390	*M5	R505	L2	R627	*J2	R742	*J3
C133	*N2	C335	*M2	C543	*K3	C736	*J4	C938	*F4	C1402	*D5	C1731	*H1	D204	*N2	IC304	M4	IC915	G4	IC1610	*C5	Q1400	*C5	R180	*N1	R291	*N3	R391	*M3	R506	K2	R628	*J2	R743	*J2
C134	*N2	C336	*M2	C544	*K4	C737	*J4	C940	*F2	C1403	*D5	C1732	*F1	D205	*N2	IC305	M3	IC1000	*G1	IC1611	*B5	Q1700	*E5	R181	*N2	R292	*N3	R392	*N3	R507	*L2	R631	*K2	R744	*J2
C135	*N2	C337	*M2	C545	*K4	C740	J2	C941	*F2	C1404	*D4	C1733	*E4	D300	*N4	IC306	M2	IC1001	G2	IC1612	*D1	Q1701	*E5	R182	*P2	R293	*N3	R393	*M3	R508	K1	R633	*K2	R745	*J2
C136	*P2	C338	M2	C546	*L4	C741	*J2	C942	*F3	C1405	*D4	C1734	*E1	D301	*N4	IC307	*M2	IC1003	G2	IC1613	*E1	Q1702	*E5	R183	P3	R294	N3	R394	N3	R510	L5	R634	*K2	R747	J2
C137	*P2	C339	*M2	C547	*L4	C742	*J3	C943	*F3	C1406	*B3	C1735	E1	D302	*N4	IC308	M2	IC1004	G2	IC1614	*C4	Q1703	*E5	R184	*P2	R295	*N3	R395	*M3	R511	L5	R635	*K2	R748	*J3
C138	P2	C340	*M4	C556	*L2	C743	*J3	C945	*G3	C1407	*B3	C1736	*K1	D303	*M3	IC309	*M5	IC1005	*G2	IC1616	B5	Q1704	*E5	R185	*P2	R300	M5	R400	M5	R512	K5	R636	K2	R749	*J3
C139	*P2	C341	*M4	C557	*K4	C756	*J2	C956	*F2	C1408	*B3	C1800	F4	D304	*M2	IC311	*M5	IC1006	*G3	IC1617	*D2	Q1705	*F1	R186	*P2	R301	*N5	R401	*M5	R513	*K4	R637	K2	R750	*J3
C140	*P4	C342	N2	C558	*L4	C757	*J4	C957	*F4	C1409	*B3	C1801	F4	D305	*M2	IC402	*M4	IC1007	G3	IC1700	E3	Q1707	*F1	R187	P2	R302	*M4	R402	*L4	R514	*L2	R638	K2	R751	*J3
C141	*P4	C343	*M2	C600	*J4	C758	*J4	C958	*F4	C1410	*C3	C1802	*F5	D400	*M4	IC403	*M3	IC1008	*G3	IC1701	F2	Q1708	*F3	R188	*P3	R303	*M4	R403	*M4	R515	*K1	R639	K2	R752	*J3
C142	P2	C344	*M1	C601	*J4	C802	*H2	C959	*F4	C1411	*C3	C1803	*F5	D401	*M4	IC404	L4	IC1009	G4	IC1702	E4	Q1800	F4	R189	*P5	R304	*M4	R404	*L4	R516	*L2	R640	K2	R753	*J3
C143	*P2	C345	L1	C602	*K4	C803	*H3	C1000	*G4	C1412	*C3	C1804	*F5	D402	*M4	IC405	L3	IC1010	G4	IC1703	F3	Q1801	F4	R190	*P5	R305	*M4	R405	*M4	R520	*K2	R641	*K3	R754	*J3
C144	*P1	C346	M1	C603	*K4	C804	*H2	C1001	*G4	C1413	*C3	C1805	F5	D403	*L3	IC406	L2	IC1011	*G3	IC1704	E4	Q1802	*F4	R191	*P3	R306	*M4	R406	*L4	R521	*K2	R642	*K3	R755	*J3
C145	N1	C347	*M4	C604	*J2	C805	*H2	C1002	*G4	C1414	D3			D404	*L2	IC407	*L2	IC1012	G4	IC1705	E1	Q1803	*F4	R192	*P3	R307	*M4	R407	*M4	R525	*K2	R643	*K2	R756	*J3
C146	P1	C348	N5	C605	*J2	C806	*H3	C1003	*G4	C1415	*D3	CL1100	*D1	D405	*L2	IC409	*M5	IC1013	G4	IC1706	*D5	Q1804	*F4	R193	*P3	R308	*M4	R408	*L4	R526	*K2	R644	*K2	R757	*J3
C147	*P4	C349	M5	C606	*J3	C807	*H2	C1004	*G2	C1416	*C5	CL1101	*D1	D500	*L4	IC411	*L5	IC1014	G4	IC1707	E4	Q1805	*F4	R194	P3	R309	*M4	R409	*L4	R527	*K2	R645	*K2	R758	*J3
C148	P5	C352	*M5	C607	*J2	C808	H2	C1005	*G2	C1417	*D4	CL1102	*D1	D501	*L4	IC500	K1	IC1015	G4	IC1708	M1			R195	*P3	R310	*M4	R410	*L4	R528	*K2	R647	J2	R759	*J3
C149	P5	C400	L5	C608	J2	C809	H2	C1006	*G3	C1418	*C1	CL1103	*D1	D502	*K4	IC501	K1	IC1100	D3	IC1709	*K1	R100	P5	R200	N5	R311	*M4	R411	*M4	R531	*L2	R648	*K3	R760	*J3
C152	*P5	C401	M5	C609	K2	C810	H2	C1007	*G2	C1419	*C1	CL1104	*E1	D503	*L4	IC502	*K1	IC1117	D1	IC1710	*H1	R101	*P5	R201	*N5	R312	*M4	R412	*L4	R533	*L2	R649	*K3	R761	J3
C200	N5	C402	*L4	C610	K2	C811	H2	C1008	G2	C1420	A3	CL1105	D2	D600	*K4	IC503	L2	IC1118	D2	IC1711	*G1	R102	*P4	R202	*N4	R313	*M4	R413	*L4	R534	*L2	R650	*K3	R762	*J3
C201	N5	C403	*M4	C611	J2	C812	*H2	C1009	G2	C1421	A3	CL1106	*E1	D601	*K4	IC504	L2	IC1120	*C2	IC1712	F1	R103	*P4	R203	*N4	R314	*M4	R414	*M4	R535	*L2	R651	*K3	R763	*J3
C202	*N4	C404	*L4	C612	*K2	C813	*H2	C1010	G2	C1422	*D5	CL1107	D2	D602	*K4	IC505	*K2	IC1121	*C2	IC1713	E4	R104	*P4	R204	*N4	R315	*N4	R415	*M4	R536	L2	R652	*K3	R764	J3
C203	*N4	C405	*L4	C613	*K2	C814	*H3	C1011	G2	C1423	C3	CL1110	D2	D603	*K4	IC506	*K3	IC1200	A2	IC1732	*E1	R105	*P4	R205	*N4	R316	*M5	R416	*L4	R537	L2	R653	*K3	R765	*J3
C204	*N4	C406	*L4	C614	*K3	C815	*H2	C1012	*G2	C1424	*B3	CL1111	D2	D700	*J4	IC507	K3	IC1201	A2	IC1800	F5	R106	*P4	R206	*N4	R317	*M5	R417	*L4	R538	L2	R654	*K3	R766	*J3
C205	*N4	C407	*M4	C615	*K2	C816	*H2	C1013	*G2	C1425	*B3	CL1112	D2	D701	*J4	IC508	*K3	IC1202	D3	IC1801	F5	R107	*P4	R207	*N4	R318	*L5	R418	*L4	R539	L2	R655	*K3	R767	*J3
C206	*N4	C408	M3	C616	*K2	C817	*H3	C1014	*G2	C1426	*C5	CL1113	D2	D702	*J4	IC509	K4	IC1203	D3	IC1802	F4	R108	*P4	R208	*N4	R319	*L5	R419	*L4	R540	L2	R656	*K3	R768	*J3
C207	*N4	C409	L4	C617	*K3	C818	*H2	C1015	*G2	C1427	*B4	CL1114	*D2	D703	*J4	IC510	K4	IC1204	B2	IC1803	*F4	R109	*P4	R209	*N4	R320	*M4	R420	*M4	R541	*L3	R657	*K3	R769	J3
C208	N3	C410	L5	C618	*K2	C819	*H3	C1016	*H2	C1428	*B4	CL1115	*D2	D800	*H4	IC511	*K3	IC1205	B2	IC1804	*F4	R110	*P4	R210	*N4	R321	*M5	R421	*M3	R542	*L3	R658	*J3	R770	*J3
C209	N4	C411	*L3	C619	*K3	C820	H3	C1017	*G3	C1429	*C4	CL1116	*D2	D801	*H4	IC512	L4	IC1211	B1			R111	*P4	R211	*N4	R322	*L5	R422	*M3	R543	*L2	R659	*J3	R771	*J3
C210	N5	C412	L3	C620	J3	C821	H3	C1018	*G2	C1430	*C4	CL1117	*D2	D802	*H4	IC513	L4	IC1216	*B2	L1700	A5	R112	*P4	R212	*N4	R323	*M4	R423	*M3	R544	*L2	R660	*K3	R772	*J3
C211	*N3	C413	L3	C621	J3	C822	H3	C1020	*G3	C1431	*C3	CL1118	*E2	D803	*H4	IC514	K4	IC1217	*A2			R113	*P4	R213	*N4	R324	*M4	R424	*L4	R545	*L2	R661	J3	R773	*J3
C212	N3	C414	*L3	C622	K3	C823	H3	C1021	G3	C1432	*B3	CL1119	D3	D900	*G4	IC515	L4	IC1218	*B2	Q100	*P5	R114	*P4	R214	*N4	R325	*M5	R425	*L4	R547	K2	R662	*K3	R774	*J4
C213	N3	C415	*M3	C623	K3	C824	*H3	C1022	G3	C1433	*B3	CL1120	*E2	D901	*G4	IC600	*K1	IC1219	A1	Q101	*P2	R115	*P4	R215	*N4	R326	*L5	R426	*L4	R548	*L3	R663	J3	R776	*J4
C214	*N3	C416	M3	C624	*J3	C825	H3	C1023	G3	C1434	*B4	CL1121	D3	D902	*F4	IC601	K2	IC1300	*C2	Q102	*P3	R116	*P5	R216	*N4	R327	*M4	R427	*M3	R549	*L3	R664	*K3	R777	*J4
C215	*N3	C417	*L2	C625	*J3	C826	*H3	C1024	G3	C1435	*B4	CL1124	D3	D903	*F4	IC603	K2	IC1301	*D2	Q103	*P2	R117	*P5	R217	*N4	R328	*N4	R428	*L4	R550	*L3	R665	*K3	R778	*J3
C216	N3	C418	*M2	C626	K3	C827	H3	C1025	*G3	C1436	*C4	CL1125	D3	D1000	*G4	IC604	K2	IC1302	*D2	Q104	*P2	R118	*N5	R218	*N4	R329	*M3	R429	*L4	R551	*L3	R666	J3	R779	*J3
C217	*N2	C419	*L3	C627	K3	C828	H3	C1026	G3	C1437	*A4	CL1126	D3	D1001	*G4	IC605	*K2	IC1303	C2	Q105	*P5	R119	*N5	R219	*N4	R330	*N3	R430	*L4	R552	*K3	R667	*J3	R780	*J3
C218	*N2	C420	*M2	C628	J3	C829	H3	C1027	*G3	C1438	*C4	CL1127	D3	D1002	*G4	IC606	*K3	IC1304	C1	Q106	*P2	R120	*P4	R220	*N4	R331	*M3	R431	L4	R553	*L3	R668	*K3	R782	*J4
C219	*N3	C421	*M2	C629	K3	C830	*H4	C1028	G3	C1439	B1	CL1404	B4	D1003	*G4	IC607	K3	IC1305	*E2	Q107	*P3	R121	*P5	R221	*N3	R332	*M4	R432	*M3	R554	*L3	R669	*K3	R783	*J4
C220	*N2	C422	*L2	C630	*J4	C831	*H3	C1029	G3	C1440	*C2	CL1405	B4	D1200	A1	IC608	*J3	IC1307	*E2	Q200	*N5	R122	*N5	R222	*N3	R333	*M4	R433	*L4	R555	*L3	R670	*J3	R784	*J3
C221	*N2	C423	L2	C631	*K3	C832	*H4	C1030	G3	C1500	*B5	CL1406	C4	D1201	B1	IC609	K4	IC1308	*C2	Q201	*N2	R123	*P4	R223	*N3	R334	*M4	R434	*L3	R556	*L3	R671	*K3	R785	*J4
C222	*N2	C424	L2	C632	*K4	C833	H5	C1031	*G4	C1501	*B4	CL1407	C4	D1700	E4	IC610	K4	IC1309	*D2	Q202	*N3	R124	*P4	R224	*N4	R335	*N3	R435	L2	R557	*K3	R672	*K3	R786	*J4
C223	N2	C425	L1	C633	J5	C834	*H4	C1032	*G3	C1502	*A5	CL1408	C4	D1701	*E4	IC611	*K3	IC1310	*D2	Q203	*N2	R125	*P5	R225	*N4	R336	*M4	R436	*L3	R558	*K3	R673	*K3	R787	J2
C224	N2	C438	L2	C634	*J2	C835	*H4	C1033	*G4	C1503	*A4	CL1409	C4	D1704	*F2	IC612	K4	IC1400	D4	Q204	*N2	R126	*N5	R226	*N4	R337	*M4	R437	*L3	R559	*K3	R674	*J4	R788	J2
C225	N1	C439	*L2	C635	*J3	C836	*H4	C1034	G5	C1504	*E3	CL1410	C2	D1707	*F3	IC613	K4	IC1401	D5	Q205	*N5	R127	*P4	R227	*N3	R338	*M4	R438	*L3	R560	*L3	R675	*K3	R790	J2
C238	N2	C440	*L4	C640	J2	C837	*H4	C1040	*G2	C1505	*E2	CL1411	C2	D1708	F1	IC614	K4	IC1402	D5	Q206	*N2	R128	*P4	R228	*N4	R339	M4	R440	*L2	R561	K3	R676	*K3	R791	H2
C239	*N2	C441	*L4	C641	*J2	C840	H2	C1041	*G2	C1506	*E3	CL1412	C2	D1709	F1	IC615	K4	IC1403	D5	Q207	*N3	R129	*P3	R229	*N4	R340	*M3	R441	*L2	R562	*K3	R677	*K3	R794	*J4
C240	*N4	C442	M2	C642	*K3	C841	*H2	C1042	*G3	C1507	*E1	CL1413	C2	D1710	F1	IC700	J1	IC1404	D4	Q300	*N5	R130	*P3	R230	*N4	R341	*M4	R442	*M3	R563	K3	R678	*K3	R795	*J4
C241	*N4	C443	*L2	C643	*K3	C842	*H3	C1043	*G3	C1508	*E2	CL1501	*A5	D1711	F1	IC701	H1	IC1405	D4	Q301	*M2	R131	*P3	R231	N4	R342	*M3	R443	*L2	R564	*K3	R680	*J4	R801	*H2
C242	N2	C444	*L1	C646	*K2	C843	*H3	C1045	*G3	C1509	*E2	CL1503	*E3	D1712	*E4	IC702	*J1	IC1406	*B3	Q302	*M3	R132	*P4	R232	*N3	R343	*M3	R445	*M3	R565	*L3	R681	*K4	R803	*H2
C243	*N2	C447	*M4	C647	*K2	C846	*J2	C1046	*G2	C1510	*A4	CL1504	*E3			IC703	J2	IC1407	*B4	Q303	*M2	R133	*P4	R233	*N4	R344	*M3	R446	*L3	R566	K3	R683	*K4	R805	H2
C244	*N1	C448	M5	C650	*K2	C847	*H2	C1047	*F2	C1511	*B5	CL1519	*B5	E100	P5	IC704	J2	IC1408	*B3	Q304	*M2	R134	*P4	R234	*N3	R345	*M3	R447	*L3	R567	*K3	R684	*K4	R806	H2
C247	*N4	C449	L5	C652	*K2	C850	*H2	C1050	*G2	C1512	*B5	CL1520	E2	E101	J1	IC705	*J2	IC1409	*B4	Q305	*M5	R135	*P3	R235	*N3	R346	*M3	R448	*M2	R568	*L3	R685	*K4	R807	*H2
C248	N5	C450	*M5	C653	*K2	C852	*H2	C1052	*F2	C1600	*B5	CL1531	E3	E200	N5	IC706	*J3	IC1410	*C3	Q306	*M2	R136	*P4	R236	*N3	R347	*M3	R449	L2	R569	*L3	R686	*K4	R809	*J2
C249	N5	C451	*L5	C656	*J2	C853	*H2	C1053	*G2	C1601	*B5	CL1532	E2	E201	F1	IC707	J3	IC1411	*C4	Q307	*N3	R137	*P4	R237	*N3	R348	*N2	R450	M2	R570	*K3	R687	K2	R810	H5
C250	*P5	C452	*M5	C657	*J4	C856	*H2	C1056	*G2	C1602	*C5	CL1700	J5	E300	M5	IC708	*H3	IC1412	*C3	Q400	*M5	R138	*P4	R238	*N3	R349	*N2	R451	*M2	R571	*L3	R688	K2	R811	H5
C251	*N5	C500	K1	C658	*K4	C857	*H4	C1057	*G4	C1603	*C5	CL1701	J5	E301	A5	IC709	J4	IC1413	*C4	Q401	*L2	R139	P4	R240	*N2	R350	*N3	R452	*M2	R572	*K3	R690	K2	R812	H5
C252	*N5	C501	*K1	C700	J1	C858	*H4	C1058	*G4	C1604	*C5	CL1702	J5	E400	L5	IC710	J4	IC1415	D3	Q402	*L3	R140	*P3	R241	*N2	R351	*M2	R453	*L2	R573	*L3	R691	K2	R813	*H4
C300	M5	C504	*K2	C701	*J1	C900	G1	C1059	*G4	C1605	*B5	CL1703	J5	E401	B5	IC711	*J3	IC1416	D3	Q403	*L2	R141	*P4	R242	*N3	R354	*M3	R454	*L3	R574	*K3	R693	*J4	R814	*H2
C301	M5	C505	*K2	C702	*J2	C901	*G1	C1100	D3	C1606	C4	CL1704	J5	E500	K5	IC712	J4	IC1417	C5	Q404	*L2	R142	*P3	R243	*N2	R355	*M3	R455	*M2	R575	*L3	R694	*K4	R816	*H2
														E600	P6																

R820	*H2	R935	*G2	R1042	*G3	R1604	*B5	RB1505	*E3	SL100	P5
R821	*H2	R936	F2	R1043	*G2	R1605	*B5	RB1506	*E3	SL200	N5
R825	*H2	R937	G2	R1044	*G2	R1606	*B5	RB1507	*E3	SL300	N5
R826	*H2	R938	G2	R1045	*H2	R1607	*C5	RB1508	*A4	SL400	M5
R827	*H2	R939	G2	R1047	*G2	R1608	C4	RB1509	B5		
R828	*H2	R940	G2	R1048	*G2	R1609	C4	RB1510	B5	TH1700	N1
R831	*H2	R941	*G3	R1050	*G3	R1611	C4	RB1511	*B5		
R833	*H2	R942	*G3	R1051	*G3	R1612	*E2	RB1512	*B5	THP100	P4
R834	*H2	R943	*F2	R1052	G3	R1613	E1	RB1513	*A5	THP200	N4
R835	*H2	R944	*G2	R1053	*G3	R1614	E1	RB1514	*A5	THP300	M4
R836	H2	R945	*G2	R1054	*G3	R1701	*E3	RB1515	B5	THP400	L4
R837	H2	R946	F2	R1055	*G3	R1702	*E4	RB1516	B5		
R838	H2	R947	*F2	R1056	*G3	R1704	*E4	RB1517	B5	TP100	P5
R839	H2	R948	*F2	R1057	*G3	R1706	*E4	RB1518	A5	TP101	P2
R840	H2	R950	*F3	R1058	*G3	R1707	*E4	RB1519	B5	TP200	N5
R841	*H3	R951	*F3	R1059	*G3	R1708	*N1	RB1520	A5	TP201	N2
R842	*H3	R952	F3	R1060	*G3	R1709	*E4	RB1521	E3	TP300	M5
R843	*H2	R953	*F3	R1061	*G3	R1710	*E4	RB1522	E3	TP301	N2
R844	*H2	R954	*G3	R1062	*G3	R1711	*E4	RB1600	*B5	TP400	L5
R845	*H2	R955	*G3	R1063	*G3	R1712	*E4	RB1601	*C5	TP401	M2
R847	H2	R956	*G3	R1064	*G3	R1713	*E4	RB1602	*C5	TP500	K3
R848	*H3	R957	*F3	R1065	*G3	R1714	*N1	RB1700	E5	TP600	J3
R849	*H3	R958	*F3	R1066	G3	R1715	*N1	RB1701	D5	TP700	J3
R850	*H3	R959	*G3	R1067	*G3	R1716	*N1	RB1702	E1	TP800	H3
R851	*H3	R960	*G3	R1068	*G3	R1717	*E4			TP900	F3
R852	*H3	R961	*G3	R1069	G3	R1718	*N1	RV100	P4	TP1000	G3
R853	*H3	R962	*F3	R1070	*G3	R1719	*E4	RV101	P4	TP1700	N2
R854	*H3	R963	*F3	R1071	*G3	R1720	*N1	RV102	P3	TP1701	N1
R855	*H3	R964	*F3	R1072	*G3	R1721	*F3	RV103	P3	TP1702	N1
R856	*H3	R965	*G3	R1073	*G3	R1722	*F1	RV200	N4	TP1703	N2
R857	*H3	R966	F3	R1074	G3	R1723	*E1	RV201	N4	TP1704	F1
R858	*H3	R967	*F3	R1075	*G3	R1724	*F1	RV202	N3	TP1705	E1
R859	*H3	R968	*G3	R1076	*G3	R1725	*F1	RV203	N3	TP1706	E1
R860	*H3	R969	F3	R1077	*G3	R1726	E5	RV300	M4	TP1707	E1
R861	H3	R970	*F3	R1078	*G3	R1727	*F1	RV301	M4	TP1708	E1
R862	*H3	R971	*F3	R1079	*G4	R1728	*E4	RV302	M3		
R863	*H3	R972	*G3	R1081	*G4	R1729	*E4	RV303	N3	X1200	A1
R864	H3	R973	*G3	R1082	*G4	R1730	*E4	RV400	L4		
R865	*H3	R974	F3	R1083	*G3	R1731	*E4	RV401	L4	*:B SIDE	
R866	*H3	R975	*G3	R1084	*G3	R1732	F1	RV402	L3		
R867	*H3	R976	*G3	R1085	*G3	R1733	*F1	RV403	M3		
R868	*H3	R977	*F3	R1087	*G4	R1800	*F4	RV500	K3		
R869	H3	R978	*F3	R1088	*G4	R1801	*F4	RV501	L5		
R870	*H3	R979	*F4	R1089	*G3	R1802	*F4	RV600	K3		
R871	*H3	R981	*G4	R1090	*G4	R1803	*F4	RV601	K5		
R872	*H3	R982	*G4	R1091	*G4	R1804	*F5	RV700	J3		
R873	*H3	R983	*F3	R1093	H2	R1805	*F5	RV701	J5		
R874	*H4	R984	*F3	R1094	H2	R1806	*F5	RV800	H3		
R876	*H4	R985	*F3	R1095	*G4	R1807	*F5	RV801	H5		
R877	*H4	R987	*F4	R1096	*G4	R1808	*F5	RV900	F3		
R878	*H3	R988	*F4	R1108	D2	R1809	*F5	RV901	G5		
R879	*H3	R989	*F3	R1109	D2	R1810	*F5	RV1000	G3		
R880	*H3	R990	*G4	R1202	B2	R1811	*F5	RV1001	G5		
R882	*H4	R991	*F4	R1203	B2	R1812	*F4				
R883	*H4	R993	G2	R1204	B2	R1813	*F4	RY100	P4		
R884	*H3	R994	G2	R1205	B2	R1814	*F4	RY101	P3		
R885	*H4	R995	*F4	R1206	B1	R1815	*F4	RY200	N4		
R886	*H4	R996	*G4	R1207	*B2			RY201	N3		
R887	H2	R1000	G2	R1208	*A1	RB500	*K1	RY300	M4		
R888	H2	R1001	G2	R1209	*B1	RB700	*H1	RY301	M3		
R890	H2	R1002	G2	R1210	A2	RB900	*G1	RY400	M4		
R891	H2	R1003	*G5	R1211	*B2	RB1100	*E3	RY401	L3		
R893	H2	R1004	G1	R1212	*A2	RB1101	*D3	RY500	L5		
R894	*H4	R1005	*G2	R1300	*E2	RB1102	*E2	RY600	K5		
R895	*H4	R1006	*G2	R1400	*B3	RB1400	B3	RY700	J5		
R900	G1	R1007	G2	R1401	*B3	RB1401	B3	RY800	H5		
R901	*F2	R1008	G2	R1402	*C3	RB1402	C3	RY900	G5		
R902	*F2	R1010	H5	R1403	*B3	RB1403	C4	RY1000	G5		
R903	*F5	R1011	H5	R1404	B4	RB1404	C3				
R904	*G1	R1012	G5	R1405	B4	RB1405	C3	S100	P4		
R905	*F2	R1014	*G2	R1406	*B3	RB1406	*C5	S101	P2		
R906	*F2	R1015	*G4	R1407	*B3	RB1407	*D5	S200	N4		
R907	F2	R1016	*G2	R1408	B3	RB1408	*D4	S201	N2		
R908	F2	R1017	*G2	R1409	*E2	RB1409	*C5	S300	N4		
R910	G5	R1018	*G2	R1410	*B4	RB1410	*D4	S301	M2		
R911	G5	R1019	*G2	R1411	*C5	RB1411	*D5	S400	M4		
R912	F5	R1020	*G2	R1412	*C5	RB1412	*D5	S401	L2		
R913	*F4	R1021	*G2	R1413	B3	RB1413	*D4	S500	L2		
R915	*G1	R1025	*G2	R1414	B3	RB1414	*C5	S501	L3		
R916	*F2	R1026	*G2	R1501	*E3	RB1415	*D4	S600	K2		
R917	*F2	R1027	*G2	R1502	*E3	RB1416	*D4	S601	K3		
R918	*G2	R1028	*G2	R1503	*E3	RB1417	*D5	S700	J2		
R919	*G2	R1031	*H2	R1504	*E3	RB1418	*D5	S701	J3		
R920	*F2	R1033	*H2	R1505	*E3	RB1419	*C4	S800	H2		
R921	*F2	R1034	*G2	R1506	*E3	RB1420	*D4	S801	H3		
R925	*F2	R1035	*G2	R1507	B5	RB1421	*C4	S900	G2		
R926	*F2	R1036	G2	R1508	E3	RB1422	*C1	S901	F2		
R927	*F2	R1037	G2	R1509	E3	RB1500	*E3	S902	G3		
R928	*F2	R1038	G2	R1600	*B5	RB1501	*E3	S1000	G2		
R931	*G2	R1039	H2	R1601	*B5	RB1502	*E3	S1001	G2		
R933	*G2	R1040	H2	R1602	*C5	RB1503	*E3	S1002	G3		
R934	*G2	R1041	*G3	R1603	*C5	RB1504	*E3				

RC-89H, APR-52 **APR-52, RC-89H**
SUFFIX: -14 SUFFIX: -16 SUFFIX: -16 SUFFIX:-14

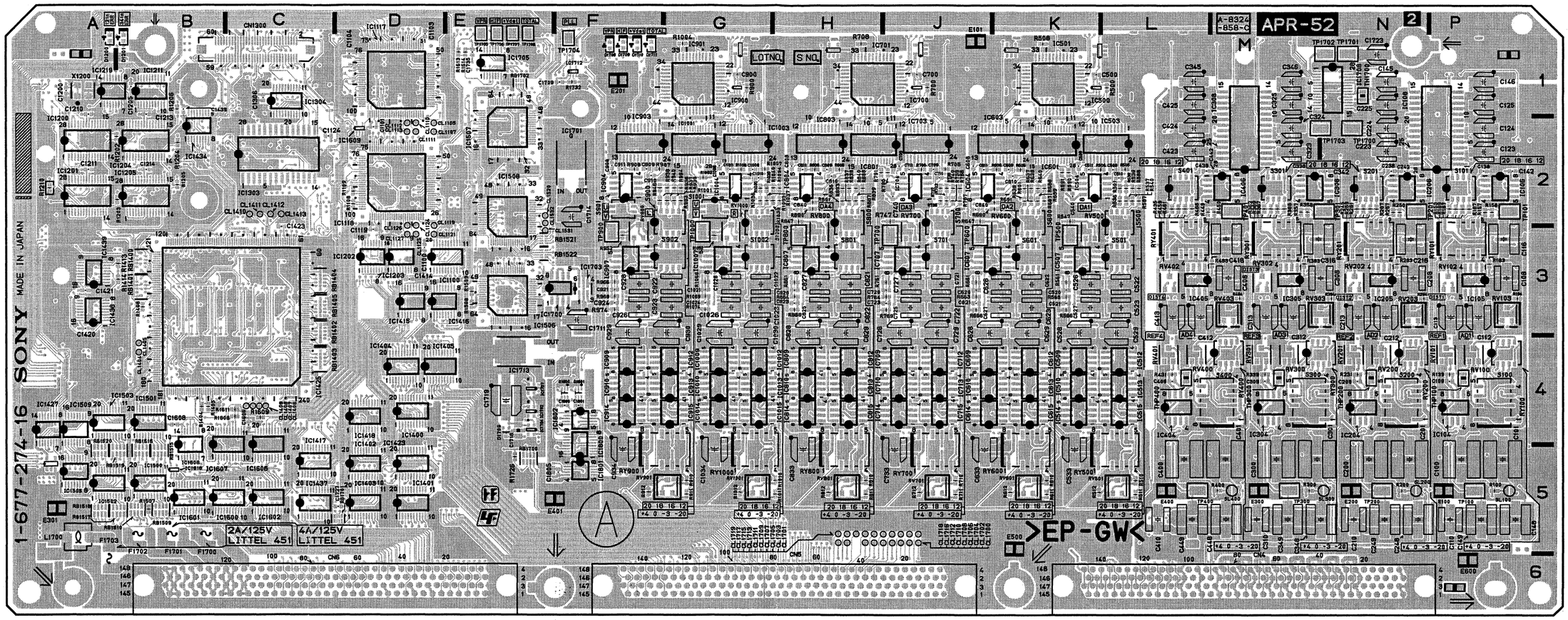

APR-52 -A SIDE-
SUFFIX: -16

Components locations list; previous page

RC-89 (1-679-846-14)

C1	D2	CL12	*A1	R1	*C1	R105	*C1
C2	D1	CL13	*A1	R2	*D1	R106	*C2
C3	*B1	CL14	*B1	R4	*B1	R107	*C1
C4	*B2	CL15	*B1	R5	*B1		
C5	*A2	CL16	*B1	R6	*B1	RB1	*A1
C6	*A1	CL17	*B1	R7	*B1	RB2	*A1
C7	*A1	CL18	*A2	R8	*B1	RB3	*A1
C8	*B1	CL19	*A2	R10	*B1	RB4	*A2
C9	*B2	CL20	*A1	R11	*B1	RB6	*B2
C10	*A2	CL21	*A1	R12	*A1	RB7	*A1
C11	*A2	CL22	*A1	R13	*A1	RB8	*A2
C12	*A1	CL23	*A1	R14	*B1	RB9	*B2
C13	*B1	CL24	*A1	R15	*B1	RB10	*A1
C14	*B1			R16	*A1	RB11	*A2
C15	*B2	CN1	D1	R19	*A2	RB12	*B2
C16	*B2			R20	*A1	RB13	*B2
C17	*A2	IC1	*B1	R21	*B1	RB14	*A2
C100	*C2	IC3	B1	R22	*B1		
C101	*C2	IC4	*B2	R23	*B1	*:B SIDE	
C102	*C1	IC5	*B2	R24	*D1		
C103	*C1	IC100	C2	R100	*C2		
		IC101	D2	R101	*C2		
CL2	*B2	IC102	C2	R102	*C1		
CL3	*B2	IC103	D2	R103	*C1		

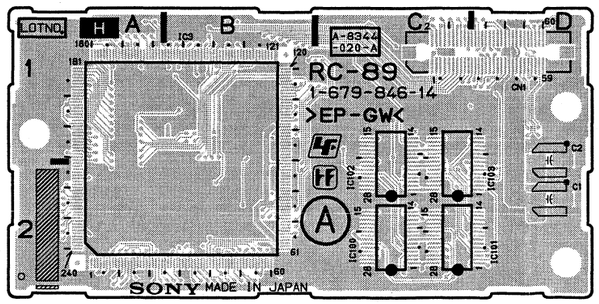

RC-89H -A SIDE-
SUFFIX: -14

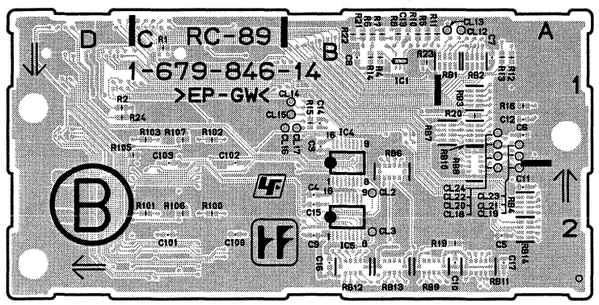

RC-89H -B SIDE-
SUFFIX: -14

APR-52
SUFFIX: -16

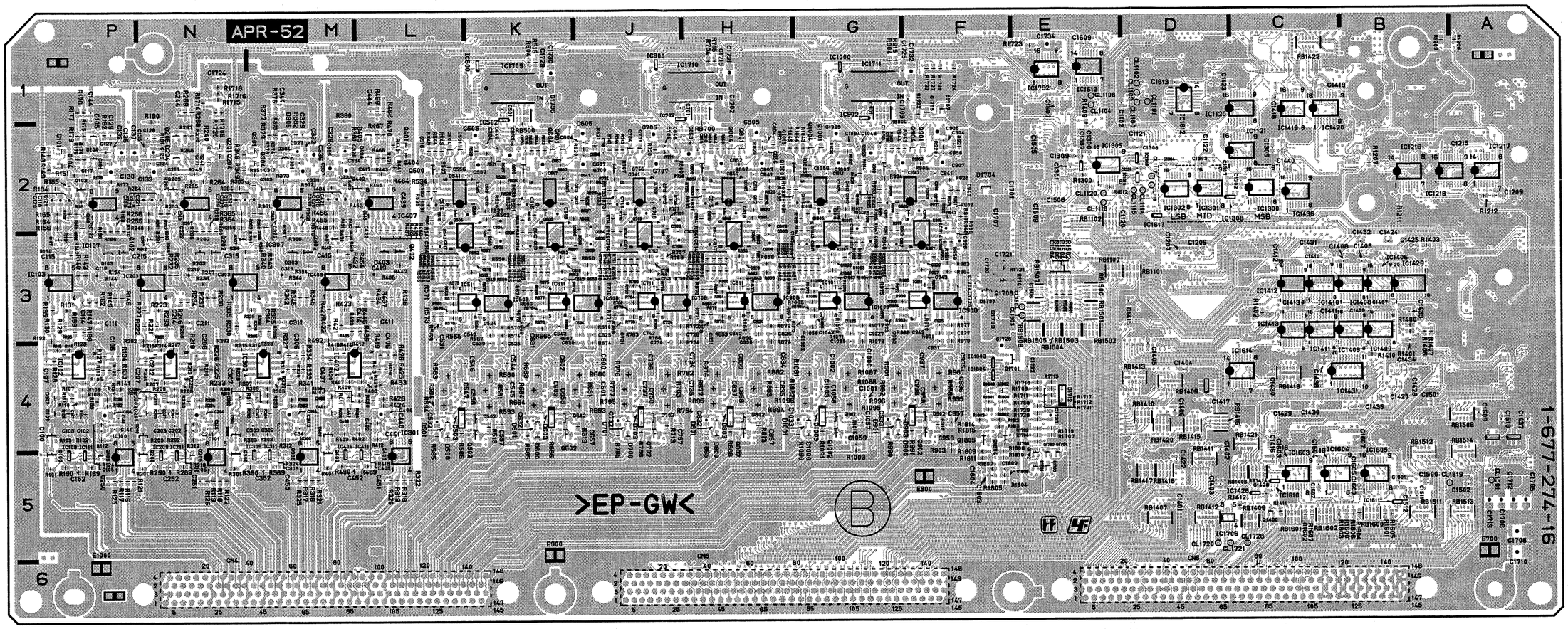

APR-52 -B SIDE-
SUFFIX: -16

4-9 (b)

APR-52 (1-677-274-14)

C10	C2	C251	*N5	C500	K1	C657	*J4	C853	*H2	C1052	*F2	C1611	*D1	CL1705	J5	F1700	B5	IC804	H2	IC1433	*E2	Q801	*H2	R166	*P2	R266	*N2	R376	*M1	R486	*L3	R606	K2	R732	*J2
C30	C2	C252	*N5	C501	*K1	C658	*K4	C856	*H2	C1053	*G2	C1612	C1	CL1706	J5	F1701	B5	IC805	*H2	IC1434	B2	Q802	*H4	R167	P2	R267	*N2	R377	*M1	R487	*L2	R607	*K2	R733	*J2
C50	C1	C300	M5	C504	*K2	C700	J1	C857	*H4	C1056	*G2	C1613	*D1	CL1707	J5	F1702	B5	IC806	*H3	IC1435	*C2	Q900	*G2	R168	*P2	R268	*N1	R378	*M2	R488	L2	R608	*K1	R734	*J2
C70	B2	C301	M5	C505	*K2	C701	*J1	C858	*H4	C1057	*G4	C1700	*F3	CL1708	H5	F1703	A6	IC807	H3	IC1436	*C2	Q901	*F2	R169	P2	R269	*N1	R379	*M2	R489	*L5	R609	*K2	R735	*J2
C100	P5	C302	*M4	C506	*K3	C702	*J2	C900	G1	C1058	*G4	C1701	*F2	CL1709	H5			IC808	*H3	IC1437	C5	Q902	*F4	R170	*P2	R270	*N2	R380	*M1	R490	*M5	R610	K5	R736	J2
C101	P5	C303	*M4	C507	*K2	C703	*J3	C901	*G1	C1059	*G4	C1702	*H1	CL1710	H5	IC1	C2	IC809	H4	IC1438	A3	Q1000	*G2	R172	*P2	R271	*N2	R381	*M2	R491	*M3	R611	K5	R737	J2
C102	*P4	C304	*M4	C508	K2	C704	*J2	C904	*F2	C1100	D3	C1703	*F1	CL1711	H5	IC100	*P5	IC810	H4	IC1439	A3	Q1001	*G2	R173	*P2	R283	N3	R382	*M2	R492	*M3	R612	K5	R738	J2
C103	*P4	C305	*M4	C509	L2	C705	*J2	C905	*F2	C1101	D2	C1704	*F3	CL1712	H5	IC101	*N5	IC811	*H3	IC1500	B5	Q1002	*G4	R174	*P2	R284	*N2	R383	M3	R493	*M3	R620	*J2	R739	J2
C104	*P4	C306	*M4	C510	L2	C706	*J3	C906	*F3	C1102	*D1	C1705	E4	CL1713	H5	IC102	*P4	IC812	H4	IC1501	B4	Q1400	*C5	R175	*P2	R285	*N2	R384	*N2	R494	M3	R621	*J2	R740	J2
C105	*P4	C307	*N4	C511	K2	C707	*J2	C907	*F2	C1103	D1	C1706	*E4	CL1714	H5	IC103	*P3	IC813	H4	IC1502	A5	Q1700	*E4	R176	*P1	R286	*N2	R385	*M2	R495	*M3	R625	*J2	R741	*J2
C106	*P4	C308	N3	C512	*K2	C708	J2	C908	F2	C1104	D1	C1707	*F2	CL1715	H5	IC104	P4	IC814	H4	IC1503	A4	Q1701	*E5	R177	*P1	R287	N2	R386	*M3	R500	L1	R626	*J2	R742	*J2
C107	*P4	C309	M4	C513	*K2	C709	J2	C909	F2	C1119	D3	C1708	*E4	CL1716	H5	IC105	P3	IC815	H4	IC1505	A5	Q1702	*E4	R178	*P2	R288	*N3	R387	*M2	R501	L2	R627	*J2	R743	*J2
C108	P3	C310	M5	C514	*L3	C710	J2	C910	F2	C1120	*D2	C1710	*F4	CL1717	H5	IC106	P2	IC900	G1	IC1506	E3	Q1703	*E5	R179	*P2	R289	*N5	R388	M2	R502	*K2	R628	*J2	R744	*J2
C109	P4	C311	*M3	C515	*L2	C711	J2	C911	F2	C1121	*D2	C1711	F3	CL1718	H5	IC107	*P2	IC901	G1	IC1507	E2	Q1704	*E4	R180	*N1	R290	*N5	R389	*M5	R503	*K2	R631	*K2	R745	*J2
C110	P5	C312	M3	C516	*L2	C712	*J2	C912	*F2	C1122	*D2	C1712	E4	CL1719	H5	IC108	P2	IC903	F2	IC1508	E2	Q1705	*E4	R181	*N2	R291	*N3	R390	*M5	R504	*K1	R632	*K2	R747	J2
C111	*P3	C313	M3	C517	*L3	C713	*J2	C913	*F2	C1123	*C1	C1713	E4	CL1720	*D5	IC109	*P5	IC904	F2	IC1509	A4	Q1706	*E4	R182	*P2	R292	*N3	R391	*M3	R505	L2	R633	*K2	R748	*J3
C112	P3	C314	*M3	C518	*L2	C714	*J3	C914	*F2	C1124	*D2	C1714	F2	CL1721	*D5	IC111	*P5	IC905	*F2	IC1510	*E1	Q1707	E4	R183	P3	R293	*N3	R392	*M3	R506	K2	R634	*K2	R749	*J3
C113	P3	C315	*N3	C519	*K3	C715	*J2	C915	*G2	C1200	A1	C1715	F4	CL1728	*C5	IC202	*N4	IC906	*F3	IC1600	B5	Q1800	F1	R184	*P2	R294	N3	R393	*M3	R507	*L2	R635	*K2	R750	*J3
C114	*P3	C316	M3	C520	K3	C716	*J2	C916	*G2	C1201	A3	C1716	*H1			IC203	*N3	IC907	F3	IC1601	B5	Q1801	F1	R185	*P2	R295	*N3	R394	N3	R508	K1	R636	K2	R751	*J3
C115	*P3	C317	*M2	C521	K3	C717	*J3	C917	*G3	C1205	B1	C1717	F4	CN1	E1	IC204	N4	IC908	*F3	IC1602	C5	Q1802	F1	R186	*P2	R300	M5	R395	*M3	R510	K5	R637	K2	R752	*J3
C116	P3	C318	*M2	C522	L3	C718	*J2	C918	*G2	C1206	*D3	C1718	E4	CN4	M6	IC205	N3	IC909	F4	IC1603	*C5	Q1803	F1	R187	P2	R301	*N5	R400	M5	R511	L5	R638	K2	R753	*J3
C117	*P2	C319	*M3	C523	L3	C719	*J3	C920	*F3	C1207	*D3	C1719	E4	CN5	H6	IC206	N2	IC910	F4	IC1604	*C5	Q1804	*F4	R188	*P3	R302	*M4	R401	*M5	R512	K5	R639	K2	R754	*J3
C118	*P2	C320	*N2	C524	*K3	C720	J3	C921	F3	C1209	*A2	C1722	*E1	CN6	C6	IC207	*N2	IC911	*F3	IC1605	*B5	Q1805	*F4	R189	*P5	R303	*M4	R402	*L4	R515	*K1	R640	K2	R755	*J3
C119	*P3	C321	*N2	C525	*K4	C721	J3	C922	G3	C1210	A1	C1723	N1	CN1300	C1	IC209	*N5	IC912	G4	IC1606	C5			R190	*P5	R304	*M4	R403	*M4	R520	*K2	R641	*K2	R756	*J3
C120	*P2	C322	*M2	C526	K3	C722	J3	C923	G3	C1211	A2	C1724	*N1			IC211	*N5	IC913	G4	IC1607	B5	R10	C2	R191	*P3	R305	*M4	R404	*L4	R521	*K2	R642	*K2	R757	*J3
C121	*P2	C323	M2	C527	K3	C723	J3	C924	F3	C1213	B1	C1725	*F1	D100	*P4	IC300	*M5	IC914	F4	IC1608	B5	R30	C2	R192	*P3	R306	*M4	R405	*M4	R525	*K2	R643	*K2	R758	*J3
C122	*P2	C324	M2	C528	K3	C724	*J3	C925	*F3	C1214	B2	C1728	*K1	D101	*P4	IC301	*L5	IC915	G4	IC1609	D2	R50	C1	R193	*P3	R307	*M4	R406	*L4	R526	*K2	R644	*K2	R759	*J3
C123	P2	C325	M1	C529	L3	C725	J3	C926	F3	C1215	*B2	C1729	*K1	D102	*P4	IC302	*M4	IC1000	*G1	IC1610	*C5	R70	B2	R194	P3	R308	*M4	R407	*M4	R527	*K2	R645	*K2	R760	*J3
C124	P2	C326	*M2	C530	*K4	C726	*J3	C927	*F3	C1400	*D4	C1730	*K1	D103	*P3	IC303	*N3	IC1001	G2	IC1611	*B5	R100	P5	R195	*P3	R309	*M4	R408	*L4	R528	*K2	R647	J2	R761	J3
C125	P1	C327	*M2	C531	*L3	C727	J3	C928	F3	C1401	*D5	C1731	*H1	D104	*P2	IC304	M4	IC1003	G2	IC1612	*D1	R101	*P5	R200	N5	R310	*M4	R409	*L4	R531	*L2	R648	*K3	R762	*J3
C126	*N2	C328	*M2	C532	*L4	C728	J3	C929	F3	C1402	*D5	C1732	*F1	D105	*P2	IC305	M3	IC1004	G2	IC1613	*E1	R102	*P4	R201	*N5	R311	*M4	R410	*L4	R532	*L2	R649	*K3	R763	*J3
C127	*P2	C329	*M2	C533	K5	C729	J3	C930	G3	C1403	*D5	C1733	E4	D200	*N4	IC306	M2	IC1005	*G2	IC1614	*C4	R103	*P4	R202	*N4	R312	*M4	R411	*M4	R533	*L2	R650	*K3	R764	J3
C128	*N2	C330	*M2	C534	*K2	C730	*J4	C931	*F4	C1404	*D4	C1800	F1	D201	*N4	IC307	*M2	IC1006	*G3	IC1615	*D1	R104	*P4	R203	*N4	R313	*M4	R412	*L4	R534	*L2	R651	*K3	R765	*J3
C129	*P2	C331	*M2	C535	*K3	C731	*J3	C932	*G3	C1405	*D4	C1801	F1	D202	*N4	IC308	M2	IC1007	G3	IC1616	B5	R105	*P4	R204	*N4	R314	*M4	R413	*L4	R535	*L2	R652	*K3	R766	*J3
C130	*P2	C332	*M2	C540	K2	C732	*J4	C933	*G4	C1406	*B3	C1802	*F5	D203	*N3	IC309	*M5	IC1008	*G3	IC1617	*D2	R106	*P4	R205	*N4	R315	*N4	R414	*M4	R536	L2	R653	*K3	R767	*J3
C131	*P2	C333	*M2	C541	*K2	C733	J5	C934	F5	C1407	*B3	C1803	*F5	D204	*N2	IC311	*M5	IC1009	G4	IC1618	*D1	R107	*P4	R206	*N4	R316	*M5	R415	*M4	R537	L2	R654	*K3	R768	*J3
C132	*P2	C334	*M2	C542	*K3	C734	*H4	C935	*F4	C1408	*B3	C1804	*F5	D205	*N2	IC402	*M4	IC1010	G4	IC1700	F3	R108	*P4	R207	*N4	R317	*M5	R416	*L4	R538	L2	R655	*K3	R769	J3
C133	*N2	C335	*M2	C543	*K3	C735	*H4	C936	*F4	C1409	*B3	C1805	F5	D300	*N4	IC403	*M3	IC1011	*G3	IC1701	F2	R109	*P4	R208	*N4	R318	*L5	R417	*L4	R539	L2	R656	*K3	R770	*J3
C134	*N2	C336	*M2	C544	*K4	C736	*J4	C937	*F4	C1410	*C3			D301	*N4	IC404	L4	IC1012	G4	IC1702	E4	R110	*P4	R209	*N4	R319	*L5	R418	*L4	R540	L2	R657	*K3	R771	*J3
C135	*N2	C337	*M2	C545	*K4	C737	*J4	C938	*F4	C1411	*C3	CL10	C2	D302	*N4	IC405	L3	IC1013	G4	IC1704	E4	R111	*P4	R210	*N4	R320	*M4	R419	*L4	R541	*L2	R658	*J3	R772	*J3
C136	*P2	C338	M2	C546	*L4	C740	J2	C940	*F2	C1412	*C3	CL30	C2	D303	*M3	IC406	L2	IC1014	G4	IC1706	E1	R112	*P4	R211	*N4	R321	*M5	R420	*M4	R542	*L2	R659	*J3	R773	*J3
C137	*P2	C339	*M2	C547	*L4	C741	*J2	C941	*F2	C1413	*C3	CL50	C1	D304	*M2	IC407	*L2	IC1015	G4	IC1707	E4	R113	*P4	R212	*N4	R322	*L5	R421	*M3	R543	*L2	R660	*K3	R774	*J4
C138	P2	C340	*M4	C556	*L2	C742	*J3	C942	*F3	C1414	D3	CL70	B2	D305	*M2	IC409	*M5	IC1100	D3	IC1708	M1	R114	*P4	R213	*N4	R323	*M4	R422	*M3	R544	*K2	R661	J3	R776	*J4
C139	*P2	C341	*M4	C557	*K4	C743	*J3	C943	*F3	C1415	*D3	CL1100	*D1	D400	*M4	IC411	*L5	IC1117	D1	IC1709	*K1	R115	*P4	R214	*N4	R324	*M4	R423	*M3	R545	*L2	R662	*K3	R777	*J4
C140	*P4	C342	N2	C558	*L4	C756	*J2	C945	*G3	C1416	*C5	CL1101	*D1	D401	*M4	IC500	K1	IC1118	D2	IC1710	*H1	R116	*P5	R215	*N4	R325	*M5	R424	*L4	R547	K2	R663	J3	R778	*J3
C141	*P4	C343	*M2	C600	*J4	C757	*J4	C956	*F2	C1417	*D4	CL1102	*D1	D402	*M4	IC501	K1	IC1119	*D1	IC1711	*G1	R117	*P5	R216	*N4	R326	*L5	R425	*L4	R548	*L3	R664	*K3	R779	*J3
C142	P2	C344	*M1	C601	*J4	C758	*J4	C957	*F4	C1418	*C1	CL1103	*D1	D403	*L3	IC503	L2	IC1120	*C2	IC1800	F5	R118	*N5	R217	*N4	R327	*M4	R426	*L4	R549	*L3	R665	*K3	R780	*J3
C143	*P2	C345	L1	C602	*K4	C802	*H2	C958	*F4	C1419	*C1	CL1104	*E1	D404	*L2	IC504	L2	IC1121	*C2	IC1801	F5	R119	*N5	R218	*N4	R328	*M4	R427	*M3	R550	*L3	R666	J3	R782	*J4
C144	*P1	C346	M1	C603	*K4	C803	*H3	C959	*F4	C1420	A3	CL1105	D2	D405	*L2	IC505	*K2	IC1200	A2	IC1802	F4	R120	*P4	R219	*N4	R329	*M3	R428	*L4	R551	*L3	R667	*J3	R783	*J4
C145	N1	C347	*M4	C604	*J2	C804	*H2	C1000	*G4	C1421	A3	CL1106	*E1	D500	*L4	IC506	*K3	IC1201	A2	IC1803	*F4	R121	*P5	R220	*N4	R330	*N3	R429	*L4	R552	*K3	R668	*K3	R784	*J3
C146	P1	C348	N5	C605	*J2	C805	*H2	C1001	*G4	C1422	*D5	CL1107	D2	D501	*L4	IC507	K3	IC1202	D3	IC1804	*F4	R122	*N5	R221	*N3	R331	*M3	R430	*L4	R553	*L3	R669	*K3	R785	*J4
C147	*P4	C349	M5	C606	*J3	C806	*H3	C1002	*G4	C1423	C3	CL1110	D2	D502	*K4	IC508	*K3	IC1203	D3			R123	*P4	R222	*N3	R332	*M4	R431	L4	R554	*L3	R670	*K3	R786	*J4
C148	P5	C352	*M5	C607	*J2	C807	*H2	C1003	*G4	C1424	*B3	CL1111	D2	D503	*L4	IC509	K4	IC1204	B2	L1700	A5	R124	*P4	R223	*N3	R333	*M4	R432	*M3	R555	*L3	R671	*K3	R787	J2
C149	P5	C400	L5	C608	J2	C808	H2	C1004	*G2	C1425	*B3	CL1112	D2	D600	*K4	IC510	K4	IC1205	B2			R125	*P5	R224	*N4	R334	*M4	R433	*L4	R556	*L3	R672	*K3	R788	J2
C152	*P5	C401	M5	C609	K2	C809	H2	C1005	*G2	C1426	*C5	CL1113	D2	D601	*K4	IC511	*K3	IC1206	A3	Q100	*P5	R126	*N5	R225	*N4	R335	*N3	R434	*L3	R557	*K3	R673	*K3	R790	J2
C200	N5	C402	*L4	C610	K2	C810	H2	C1006	*G3	C1427	*B4	CL1114	*D2	D602	*K4	IC512	L4	IC1211	B1	Q101	*P2	R127	*P4	R226	*N4	R336	*M4	R435	L2	R558	*K3	R674	*J4	R791	H2
C201	N5	C403	*M4	C611	J2	C811	H2	C1007	*G2	C1428	*B4	CL1115	*D2	D603	*K4	IC513	L4	IC1216	*B2	Q102	*P3	R128	*P4	R227	*N3	R337	*M4	R436	*L3	R559	*K3	R675	*K3	R794	*J4
C202	*N4	C404	*L4	C612	*K2	C812	*H2	C1008	G2	C1429	*C4	CL1116	*D2	D700	*J4	IC514	K4	IC1217	*A2	Q103	*P2	R129	*P3	R228	*N4	R338	*M4	R437	*L3	R560	*L3	R676	*K3	R795	*J4
C203	*N4	C405	*L4	C613	*K2	C813	*H2	C1009	G2	C1430	*C4	CL1117	*D2	D701	*J4	IC515	L4	IC1218	*B2	Q105	*P5	R130	*P3	R229	*N4	R339	M4	R438	*L3	R561	K3	R677	*K3	R801	*H2
C204	*N4	C406	*L4	C614	*K3	C814	*H3	C1010	G2	C1431	*C3	CL1118	*E2	D702	*J4	IC600	*K1	IC1219	A1	Q106	*P2	R131	*P3	R230	*N4	R340	*M3	R440	*L2	R562	*K3	R678	*K3	R803	*H2
C205	*N4	C407	*M4	C615	*K2	C815	*H2	C1011	G2	C1432	*B3	CL1119	D3	D703	*J4	IC601	K2	IC1220	*A2	Q107	*P3	R132	*P4	R231	N4	R341	*M4	R441	*L2	R563	K3	R680	*J4	R805	H2
C206	*N4	C408	M3	C616	*K2	C816	*H2	C1012	*G2	C1433	*B3	CL1120	*E2	D800	*H4	IC603	K2	IC1221	A3	Q200	*N5	R133	*P4	R232	*N3	R342	*M3	R442	*M3	R564	*K3	R681	*K4	R806	H2
C207	*N4	C409	L4	C617	*K3	C817	*H3	C1013	G2	C1434	*B4	CL1121	D3	D801	*H4	IC604	K2	IC1400	D4	Q201	*N2	R134	*P4	R233	*N4	R343	*M3	R443	*L2	R565	*L3	R683	*K4	R807	*H2
C208	N3	C410	L5	C618	*K2	C818	*H2	C1014	*G2	C1435	*B4	CL1124	D3	D802	*H4	IC605	*K2	IC1401	D5	Q202	*N3	R135	*P3	R234	*N3	R344	*M3	R444	*L2	R566	K3	R684	*K4	R808	*J1
C209	N4	C411	*L3	C619	*K3	C819	*H3	C1015	*G2	C1436	*C4	CL1125	D3	D803	*H4	IC606	*K3	IC1402	D5	Q203	*N2	R136	*P4	R235	*N3	R345	*M3	R445	*M3	R567	*K3	R685	*K4	R809	*J2
C210	N5	C412	L3	C620	J3	C820	H3	C1016	*H2	C1437	*A4	CL1126	D3	D900	*G4	IC607	K3	IC1403	D5	Q205	*N5	R137	*P4	R236	*N3	R346	*M3	R446	*L3	R568	*L3	R686	*K4	R810	H5
C211	*N3	C413	L3	C621	J3	C821	H3	C1017	*G3	C1438	*C4	CL1127	D3	D901	*G4	IC608	*J3	IC1404	D4	Q206	*N2	R138	*P4	R237	*N3	R347	*M3	R447	*L3	R569	*L3	R687	K2	R811	H5
C212	N3	C414	*L3	C622	K3	C822	H3	C1018	*G2	C1439	B1	CL1404	B4	D902	*F4	IC609	K4	IC1405	D4	Q207	*N3	R139	P4	R238	*N3	R348	*N2	R448	*M2	R570	*K3	R688	K2	R812	H5
C213	N3	C415	*M3	C623	K3	C823	H3	C1020	*G3	C1440	*C2	CL1405	B4	D903	*F4	IC610	K4	IC1406	*B3	Q300	*N5	R140	*P3	R240	*N2	R349	*M2	R449	L2	R571	*L3	R690	K2	R820	*H2
C214	*N3	C416	M3	C624	*J3	C824	*H3	C1021	G3	C1500	*B5	CL1406	C4	D1000	*G4	IC611	*K3	IC1407	*B4	Q301	*M2	R141	*P4	R241	*N2	R350	*N3	R450	M2	R572	*K3	R691	K2	R821	*H2
C215	*N3	C417	*L2	C625	*J3	C825	H3	C1022	G3	C1501	*B4	CL1407	C4	D1001	*G4	IC612	K4	IC1408	*B3	Q302	*M3	R142	*P3	R242	*N3	R351	*M2	R451	*M2	R573	*L3	R693	*J4	R825	*H2
C216	N3	C418	*M2	C626	K3	C826	*H3	C1023	G3	C1502	*A5	CL1408	C4	D1002	*G4	IC613	K4	IC1409	*B4	Q303	*M2	R143	*P3	R243	*N2	R352	*M2	R452	*M2	R574	*K3	R694	*K4	R826	*H2
C217	*N2	C419	*L3	C627	K3	C827	H3	C1024	G3	C1503	*A4	CL1409	C4	D1003	*G4	IC614	K4	IC1410	*C3	Q305	*M5	R144	*P3	R244	*N2	R354	*M3	R453	*L2	R575	*L3	R700	J1	R827	*H2
C218	*N2	C420	*M2	C628	J3	C828	H3	C1025	*G3	C1504	*E3	CL1410	C2	D1700	*E4	IC615	K4	IC1411	*C4	Q306	*M2	R145	*P3	R245	N2	R355	*M3	R454	*L3	R576	*L3	R701	*J2	R828	*H2
C219	*N3	C421	*M2	C629	K3	C829	H3	C1026	G3	C1505	*E2	CL1411	C2	D1701	*E5	IC700	J1	IC1412	*C3	Q307	*N3	R146	*P3	R246	*N3	R356	*N2	R455	*M2	R577	*L3	R702	J2	R831	*H2
C220	*N2	C422	*L2	C630	*J4	C830	*H4	C1027	*G3	C1506	*E3	CL1412	C2	D1704	*F2	IC701	H1	IC1413	*C4	Q400	*M5	R147	*P3	R247	*N3	R357	M2	R456	*M2	R578	*L3	R703	*J2	R832	*H2
C221	*N2	C423	L2	C631	*K3	C831	*H3	C1028	G3	C1507	*E1	CL1413	C2	D1707	*F3	IC703	J2	IC1414	B4	Q401	*L2	R148	*P2	R248	*N2	R358	M2	R458	*L2	R580	*K4	R704	*H1	R833	*H2
C222	*N2	C424	L2	C632	*K4	C832	*H4	C1029	G3	C1508	*E2	CL1501	*A5			IC704	J2	IC1415	D3	Q402	*L3	R149	*P2	R249	*N3	R359	*M2	R459	L2	R581	*K4	R705	J2	R834	*H2
C223	N2	C425	L1	C633	J5	C833	H5	C1030	G3	C1509	*E2	CL1503	*E3	E100	P5	IC705	*J2	IC1416	D3	Q403	*L2	R150	*P3	R250	N2	R360	*M2	R460	*L2	R583	*L4	R706	J2	R835	*H2
C224	N2	C438	L2	C634	*J2	C834	*H4	C1031	*G4	C1510	*A4	CL1504	*E3	E101	J1	IC706	*J3	IC1417	C5	Q405	*L5	R151	*P2	R251	*N2	R361	*M2	R461	L2	R584	*L4	R707	*J2	R836	H2
C225	N1	C439	*L2	C635	*J3	C835	*H4	C1032	*G3	C1511	*B5	CL1507	E2	E200	N5	IC707	J3	IC1418	D4	Q406	*L2	R152	*P2	R252	*N2	R362	M2	R462	*L2	R585	*L4	R708	H1	R837	H2
C238	N2	C440	*L4	C640	J2	C836	*H4	C1033	*G4	C1512	*B5	CL1512	E3	E201	F1	IC708	*H3	IC1419	*C2	Q407	*M3	R153	P2	R253	*N2	R364	*N2	R464	*L2	R586	*L4	R710	J5	R838	H2
C239	*N2	C441	*L4	C641	*J2	C837	*H4	C1034	G5	C1513	*E1	CL1513	E3	E300	M5	IC709	J4	IC1420	*C2	Q500	*L2	R154	*P3	R255	*N2	R365	*N2	R465	*L2	R587	L2	R711	J5	R839	H2
C240	*N4	C442	M2	C642	*K3	C840	H2	C1040	*G2	C1600	*B5	CL1516	*E1	E301	A5	IC710	J4	IC1423	D5	Q501	*L2	R156	*P2	R256	*N2	R366	*M2	R466	*L2	R588	L2	R712	J5	R840	H2
C241	*N4	C443	*L2	C643	*K3	C841	*H2	C1041	*G2	C1601	*B5	CL1517	*E1	E400	L5	IC711	*J3	IC1425	C3	Q502	*K4	R157	P2	R257	N2	R367	M2	R467	*L2	R590	K2	R715	*H1	R841	*H2
C242	N2	C444	*L1	C646	*K2	C842	*H3	C1042	*G3	C1602	*C5	CL1519	*B5	E401	E5	IC712	J4	IC1426	B3	Q600	*K2	R158	P2	R258	*N2	R368	*M2	R468	*L1	R591	K2	R720	*J2	R842	*H2
C243	*N2	C447	*M4	C647	*K2	C843	*H3	C1043	*G3	C1603	*C5	CL1520	E2	E500	K5	IC713	J4	IC1427	A4	Q601	*K2	R159	*P2	R259	N2	R369	M2	R469	*L1	R593	*K4	R721	*J2	R843	*H2
C244	*N1	C448	M5	C649	*K2	C846	*J2	C1045	*G3	C1604	*C5	CL1700	J5	E600	P6	IC714	J4	IC1428	*C5	Q602	*K4	R160	*P2	R260	*N2	R370	*M2	R470	*L2	R594	*L4	R725	*J2	R844	*H2
C247	*N4	C449	L5	C650	*K2	C847	*H2	C1046	*G2	C1605	*B5	CL1701	J5	E700	*A5	IC715	J4	IC1429	*B3	Q700	*J2	R161	*P2	R261	N2	R372	*M2	R471	*L2	R601	K2	R726	*J2	R845	*H2
C248	N5	C450	*M5	C652	*K2	C849	*H2	C1047	*G2	C1606	C4	CL1702	J5	E800	*P5	IC800	*J1	IC1430	B4	Q701	*J2	R162	*P3	R262	*N2	R373	*M2	R483	M3	R602	*K2	R727	*J2	R847	H2
C249	N5	C451	*L5	C653	*K2	C850	*H2	C1049	*G2	C1607	*B4	CL1703	J5	E900	*K5	IC801	J2	IC1431	*C4	Q702	*J4	R164	*P2	R264	*N2	R374	*M2	R484	*M2	R603	*J2	R728	*J2	R848	*H3
C250	*P5	C452	*M5	C656	*J2	C852	*H2	C1050	*G2	C1609	*E1	CL1704	J5	E1000	*P6	IC803	H2	IC1432	*E2	Q800	*H2	R165	*P2	R265	*N2	R375	*M2	R485	*M2	R605	K2	R731	*J2	R849	*H3

APR-52
SUFFIX: -14

R850	*H3	R963	*F3	R1074	G3	R1720	*N1	RV401	L4
R851	*H3	R964	*F3	R1075	*G3	R1726	E5	RV402	L3
R852	*H3	R965	*G3	R1076	*G3	R1727	*E5	RV403	M3
R853	*H3	R966	F3	R1077	*G3	R1728	E4	RV500	K3
R854	*H3	R967	*F3	R1078	*G3	R1729	E4	RV501	L5
R855	*H3	R968	*G3	R1079	*G4	R1730	E5	RV600	K3
R856	*H3	R969	F3	R1081	*G4	R1731	E4	RV601	K5
R857	*H3	R970	*F3	R1082	*G4	R1800	F1	RV700	J3
R858	*H3	R971	*F3	R1083	*G3	R1801	F1	RV701	J5
R859	*H3	R972	*G3	R1084	*G3	R1802	F1	RV800	H3
R860	*H3	R973	*G3	R1085	*G3	R1803	F1	RV801	H5
R861	H3	R974	F3	R1087	*G4	R1804	*F5	RV900	F3
R862	*H3	R975	*G3	R1088	*G4	R1805	*F5	RV901	G5
R863	*H3	R976	*G3	R1089	*G3	R1806	*F5	RV1000	G3
R864	H3	R977	*F3	R1090	*G4	R1807	*F5	RV1001	G5
R865	*H3	R978	*F3	R1091	*G4	R1808	*F5		
R866	*H3	R979	*F4	R1093	H2	R1809	*F5	RY100	P4
R867	*H3	R981	*G4	R1094	H2	R1810	*F5	RY101	P3
R868	*H3	R982	*G4	R1095	*G4	R1811	*F5	RY200	N4
R869	H3	R983	*F3	R1096	*G4	R1812	*F4	RY201	N3
R870	*H3	R984	*F3	R1108	D2	R1813	*F4	RY300	M4
R871	*H3	R985	*F3	R1109	D2	R1814	*F4	RY301	M3
R872	*H3	R987	*F4	R1110	*D1	R1815	*F4	RY400	M4
R873	*H3	R988	*F4	R1111	*D1			RY401	L3
R874	*H4	R989	*F3	R1202	B2	RB500	*K1	RY500	L5
R876	*H4	R990	*G4	R1203	B2	RB700	*H1	RY600	K5
R877	*H4	R991	*F4	R1204	B2	RB900	*G1	RY700	J5
R878	*H3	R993	G2	R1205	B2	RB1100	*E3	RY800	H5
R879	*H3	R994	G2	R1206	B1	RB1101	*D3	RY900	G5
R880	*H3	R995	*F4	R1207	*B2	RB1102	*E2	RY1000	G5
R882	*H4	R996	*G4	R1208	B3	RB1400	B3		
R883	*H4	R1000	G2	R1209	A2	RB1401	B3	S100	P4
R884	*H3	R1001	G2	R1210	A2	RB1402	C3	S101	P2
R885	*H4	R1002	G2	R1211	*B2	RB1403	C4	S200	N4
R886	*H4	R1003	*G5	R1212	*A2	RB1404	C3	S201	N2
R887	H2	R1004	G1	R1214	A3	RB1405	C3	S300	N4
R888	H2	R1005	*G2	R1302	*C1	RB1406	*C5	S301	M2
R890	H2	R1006	*G2	R1400	*B3	RB1407	*D5	S400	M4
R891	H2	R1007	G2	R1401	*B3	RB1408	*D4	S401	L2
R893	H2	R1008	G2	R1402	*C3	RB1409	*C5	S500	L2
R894	*H4	R1010	G5	R1403	*B3	RB1410	*D4	S501	L3
R895	*H4	R1011	H5	R1404	B4	RB1411	*D5	S600	K2
R900	G1	R1012	G5	R1405	B4	RB1412	*D5	S601	K3
R901	*F2	R1013	*G1	R1406	*B3	RB1413	*D4	S700	J2
R902	*F2	R1014	*G2	R1407	*B3	RB1414	*C5	S701	J3
R903	*F5	R1020	*G2	R1408	B3	RB1415	*D4	S800	H2
R904	*G1	R1021	*G2	R1409	*E2	RB1416	*D4	S801	H3
R905	*F2	R1025	*G2	R1410	*C2	RB1417	*D5	S900	G2
R906	*F2	R1026	*G2	R1411	*C5	RB1418	*D5	S901	F2
R907	F2	R1027	*G2	R1412	*C5	RB1419	*C4	S902	G3
R908	F2	R1028	*G2	R1413	B3	RB1420	*D4	S1000	G2
R910	F5	R1031	*H2	R1414	B3	RB1421	*C4	S1001	G2
R911	G5	R1032	*H2	R1501	*E3	RB1422	*C1	S1002	G3
R912	F5	R1033	*H2	R1502	*E3	RB1500	*E3		
R915	*G1	R1034	*G2	R1503	*E3	RB1501	*E3	SL100	P5
R920	*F2	R1035	*G2	R1504	*E3	RB1502	*E3	SL200	N5
R921	*F2	R1036	G2	R1505	*E3	RB1503	*E3	SL300	N5
R925	*F2	R1037	G2	R1506	*E3	RB1504	*E3	SL400	M5
R926	*F2	R1038	G2	R1507	B5	RB1505	*E3		
R927	*F2	R1039	H2	R1508	E3	RB1506	*E3	TH1700	N1
R928	*F2	R1040	H2	R1509	E3	RB1507	*E3		
R931	*G2	R1041	*G2	R1600	*B5	RB1508	*A4	THP100	P4
R932	*G2	R1042	*G2	R1601	*B5	RB1509	B5	THP200	N4
R933	*G2	R1043	*G2	R1602	*C5	RB1510	B5	THP300	M4
R934	*G2	R1044	*G2	R1603	*C5	RB1511	*B5	THP400	L4
R935	*G2	R1045	*G2	R1604	*B5	RB1512	*B5		
R936	F2	R1047	*G2	R1605	*B5	RB1513	*A5	TP100	P5
R937	G2	R1048	*G2	R1606	*B5	RB1514	*A5	TP101	P2
R938	G2	R1050	*G3	R1607	*C5	RB1515	B5	TP200	N5
R939	G2	R1051	*G3	R1608	C4	RB1516	B5	TP201	N2
R940	G2	R1052	G3	R1609	C4	RB1517	B5	TP300	M5
R941	*G2	R1053	*G3	R1610	C1	RB1518	A5	TP301	N2
R942	*G2	R1054	*G3	R1611	*D1	RB1519	B5	TP400	L5
R943	*G2	R1055	*G3	R1700	*E1	RB1520	A5	TP401	M2
R944	*F2	R1056	*G3	R1702	*E4	RB1600	*B5	TP500	K3
R945	*F2	R1057	*G3	R1703	*F1	RB1601	*C5	TP600	J3
R946	F2	R1058	*G3	R1704	*E4	RB1602	*C5	TP700	J3
R947	*F2	R1059	*G3	R1705	*F1	RB1700	E5	TP800	H3
R948	*F2	R1060	*G3	R1706	*E4			TP900	F3
R950	*F3	R1061	*G3	R1707	*E4	RV100	P4	TP1000	G3
R951	*F3	R1062	*G3	R1708	*N1	RV101	P4	TP1700	N2
R952	F3	R1063	*G3	R1709	*E4	RV102	P3	TP1701	N1
R953	*F3	R1064	*G3	R1710	*E4	RV103	P3	TP1702	N1
R954	*G3	R1065	*G3	R1711	*E4	RV200	N4	TP1703	N2
R955	*G3	R1066	G3	R1712	*E4	RV201	N4		
R956	*G3	R1067	*G3	R1713	*E4	RV202	N3	X1200	A1
R957	*F3	R1068	*G3	R1714	*N1	RV203	N3		
R958	*F3	R1069	G3	R1715	*N1	RV300	M4	*:B SIDE	
R959	*G3	R1070	*G3	R1716	*N1	RV301	M4		
R960	*G3	R1071	*G3	R1717	E4	RV302	M3		
R961	*G3	R1072	*G3	R1718	*N1	RV303	N3		
R962	*F3	R1073	*G3	R1719	*E4	RV400	L4		

RC-89H, APR-52
SUFFIX:-13 SUFFIX: -14

APR-52, RC-89H
SUFFIX: -14 SUFFIX: -13

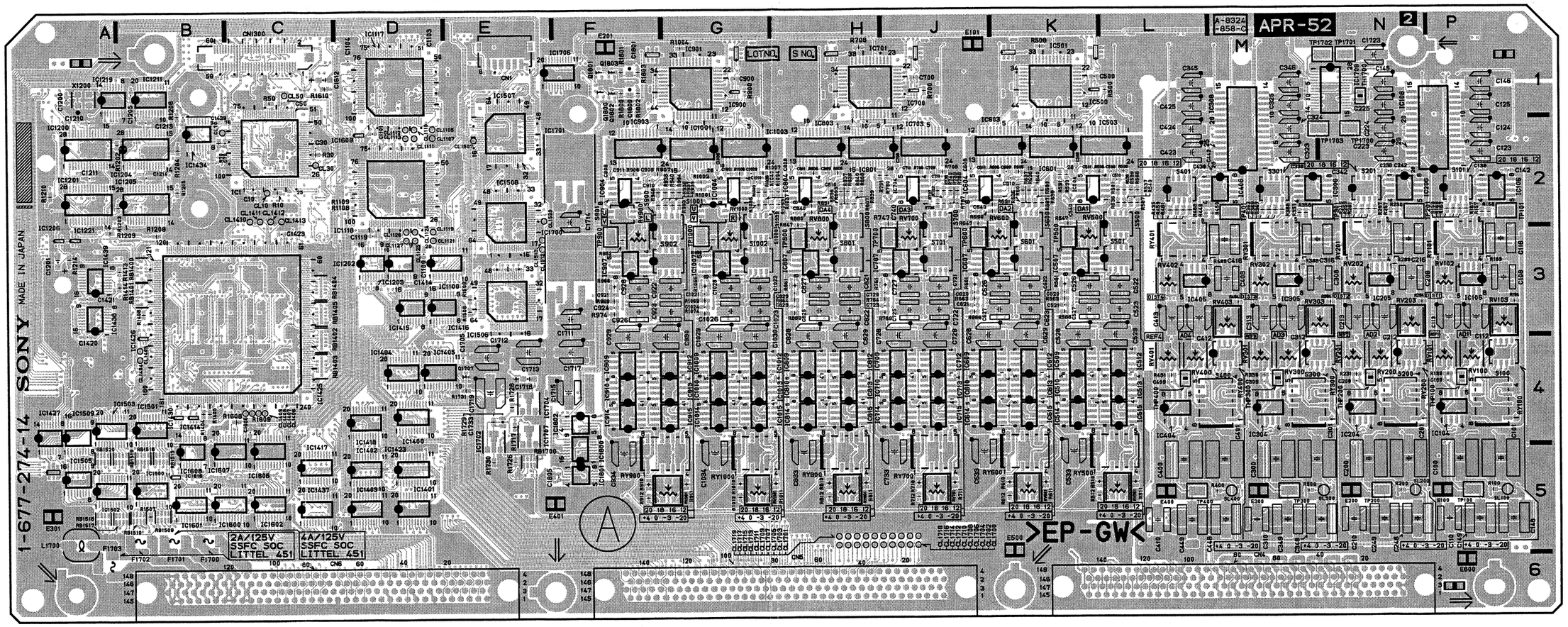

APR-52 -A SIDE-
SUFFIX: -14

Components locations list; previous page

RC-89 (1-679-846-13)

C1	D2	CL3	*B2	IC103	D2	R100	*C2
C2	D1	CL12	*A1	IC104	C1	R101	*C2
C3	*B1	CL13	*A1	IC105	D1	R102	*C1
C4	*B2	CL14	*B1			R103	*C1
C5	*A2	CL15	*B1	R1	*C1	R105	*C1
C6	*A1	CL16	*B1	R2	*D1	R106	*C2
C7	*A1	CL17	*B1	R4	*B1	R107	*C1
C8	*B1	CL18	*A2	R5	*B1	R108	*C1
C9	*B2	CL19	*A2	R6	*B1		
C10	*A2	CL20	*A1	R7	*B1	RB1	*A1
C11	*A2	CL21	*A1	R8	*B1	RB2	*A1
C12	*A1	CL22	*A1	R10	*B1	RB3	*A1
C13	*B1	CL23	*A1	R11	*B1	RB4	*A2
C14	*B1	CL24	*A1	R12	*A1	RB6	*B2
C15	*B2			R13	*A1	RB7	*A1
C16	*B2	CN1	D1	R14	*B1	RB8	*A2
C17	*A2			R15	*B1	RB9	*B2
C100	*C2	IC1	*B1	R16	*A1	RB10	*A1
C101	*C2	IC3	B1	R19	*A2	RB11	*A2
C102	*C1	IC4	*B2	R20	*A1	RB12	*B2
C103	*C1	IC5	*B2	R21	*B1	RB13	*B2
C104	C1	IC100	C2	R22	*B1	RB14	*A2
		IC101	D2	R23	*B1		
CL2	*B2	IC102	C2	R24	*D1	*:B SIDE	

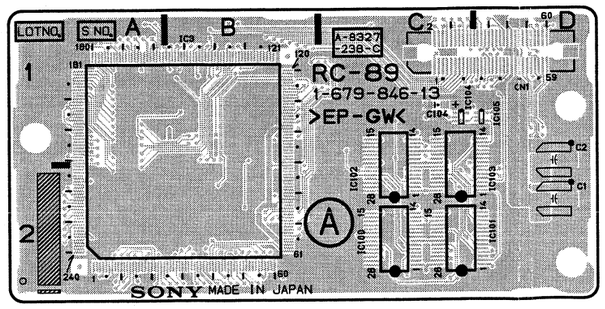

RC-89H -A SIDE-
SUFFIX: -13

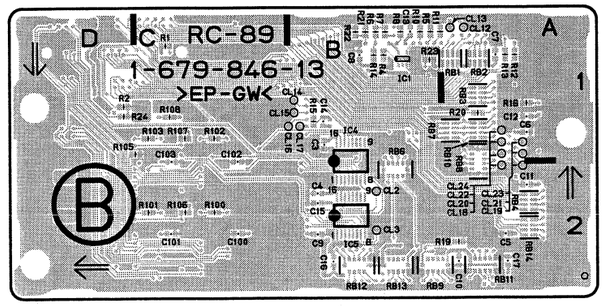

RC-89H -B SIDE-
SUFFIX: -13

APR-52
SUFFIX: -14

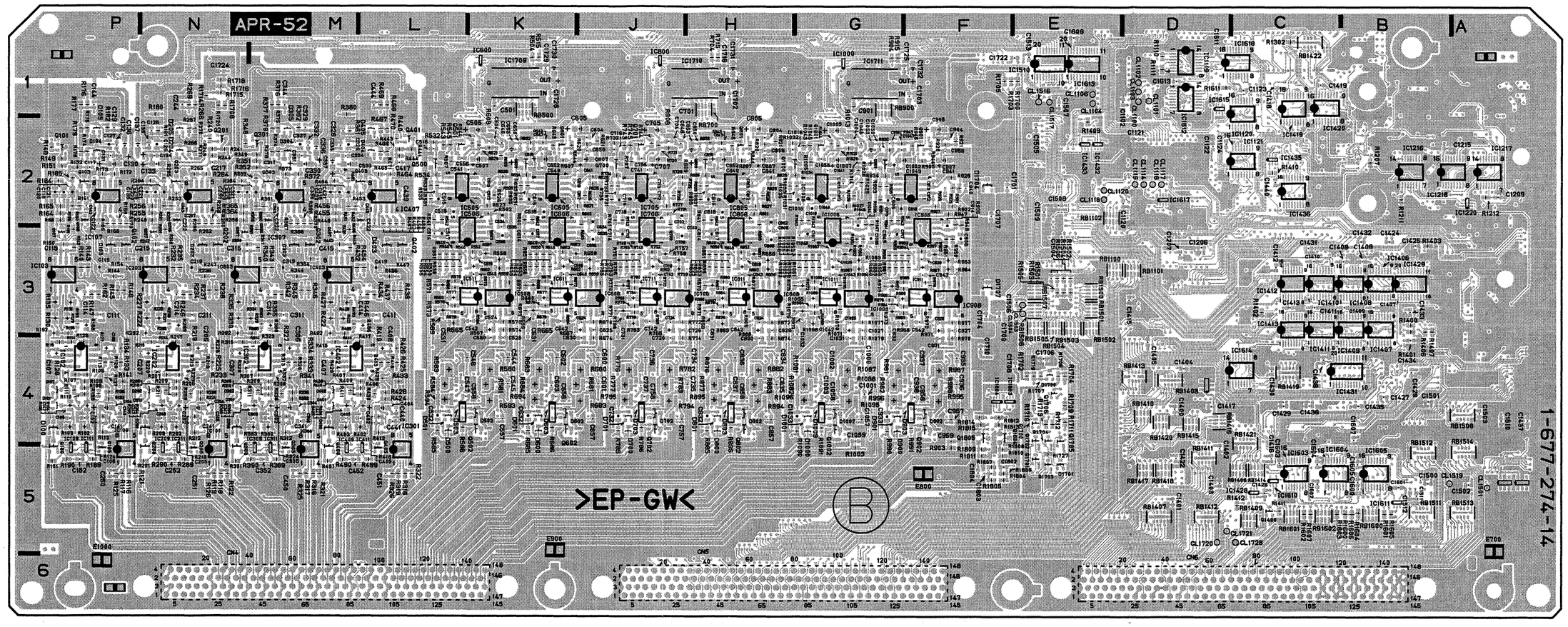

APR-52 -B SIDE-
SUFFIX: -14

AU-272
SUFFIX: -13

AU-272 (1-677-288-13)

C100	*E1	C557	D3	C679	B1	D304	*C4	L600	D2	R516	*B3	R640	*A2	R737	*B1	TP600	C3
C101	*E1	C558	*C3	C682	*C1	D305	*B3	L601	D2	R517	*C2	R641	*B2	R738	B1	TP601	A3
C102	*E1	C559	D3	C683	*C1	D500	*E4	L602	D1	R518	*B2	R642	*A2	R739	B1	TP700	C1
C103	*E1	C560	*D3	C700	*B2	D550	*D4	L603	D1	R519	*C3	R643	*A2	R740	*B1	TP701	A3
C104	*E1	C561	*D3	C701	*B2	D551	*D4	L604	D2	R520	*B3	R644	*A2	R741	B1		
C105	E1	C563	D3	C702	*B2	D600	*C2	L605	D1	R521	*C3	R645	*A2	R742	B1	*:B SIDE	
C106	*E1	C564	*D3	C703	*B2	D601	*C1	L700	C2	R522	*B3	R646	*A2	R743	*C1		
C107	E1	C567	*D3	C704	B2	D700	C1	L701	C2	R523	*C3	R647	A2	R744	*C1		
C108	E2	C568	*C4	C705	*B2	D701	*B2	L702	C1	R524	*B3	R648	*A2	R745	B1		
C109	*E2	C569	*D4	C706	*B2	D702	*B1	L703	C1	R530	*D4	R649	*A3	R746	B1		
C110	*E2	C570	*D3	C707	*C1			L704	C2	R531	E4	R650	*A3	R747	B1		
C111	E2	C571	D4	C708	B2	E1	*B3	L705	C1	R533	*E4	R651	*A2	R748	B1		
C112	E2	C573	*D4	C709	B2	E2	*D3			R534	*C3	R652	*B2	R749	*A2		
C113	*E2	C574	*D4	C710	B2	E3	E3	PS300	B4	R535	*B3	R654	*A2	R750	*A2		
C114	*D2	C600	*D2	C711	B1	E500	D3	PS301	B4	R536	*C2	R656	*A3	R751	*A2		
C115	*E1	C601	*C2	C712	*B2	E501	C3	PS302	B4	R537	*B2	R657	*A3	R752	*A2		
C120	E1	C602	*C2	C713	*B1	E600	D1	PS303	A4	R538	*C3	R658	*A3	R753	*A2		
C121	D1	C603	*C3	C714	*B2	E700	C1	PS304	B4	R539	*B3	R659	*B3	R754	*A2		
C200	*D1	C604	*C2	C715	*B2					R550	*C4	R660	*A3	R755	A2		
C201	*D1	C605	*C2	C716	B1	FL500	D4	Q100	E3	R551	*C4	R664	A1	R756	*A2		
C202	*D1	C606	C2	C717	B2	FL501	C3	Q500	*D4	R552	*C4	R665	A1	R757	*A2		
C203	*D1	C607	*C4	C718	B2	FL502	B3	Q501	*C3	R553	*C4	R666	B1	R758	*A2		
C204	*D1	C608	*C2	C719	B1	FL600	C3	Q502	*B3	R554	*C4	R667	B1	R759	*A2		
C205	D1	C609	*C2	C720	B1	FL601	C2	Q503	*C3	R555	*C4	R668	*B1	R760	*A2		
C206	*D1	C610	*C2	C721	*B2	FL602	C2	Q504	*B3	R556	*C4	R669	*A1	R761	*A3		
C207	D1	C611	C2	C722	B1	FL603	A2	Q550	*D4	R557	*C4	R670	*C2	R762	*A3		
C208	D2	C612	C2	C723	B1	FL700	B2	Q551	*D3	R558	*C4	R671	*C1	R763	*A3		
C209	E2	C613	C2	C724	B1	FL701	B2	Q600	*C2	R559	*C4	R672	*C2	R764	*A3		
C210	D2	C614	C1	C725	B1			Q601	*A3	R560	*C4	R673	*C1	R765	*A3		
C211	*D2	C615	*C2	C726	*B1	IC100	E1	Q603	A3	R561	*C4	R674	*C1	R766	A1		
C212	*D2	C616	*C2	C727	*B2	IC101	E1	Q700	A3	R562	*C4	R675	*C1	R767	A1		
C213	D2	C617	*C2	C728	*B1	IC102	E2			R563	*C4	R676	*B3	R768	*A1		
C214	D2	C618	*C2	C729	*B1	IC103	*E2	R100	*E1	R564	*C4	R677	*B3	R769	*A1		
C215	*D1	C619	C1	C730	B1	IC104	*E2	R101	*E1	R565	*C4	R678	*B3	R770	*C2		
C300	B4	C620	C2	C731	B1	IC200	D1	R102	*E1	R566	*C4	R679	*B3	R771	*B2		
C301	A4	C621	C2	C732	B1	IC201	D1	R103	*E1	R567	*D4	R680	*B3	R772	*B1		
C302	B4	C622	C1	C733	B1	IC202	*D2	R104	*E1	R568	*D3	R681	*B3	R773	*A3		
C303	A4	C623	C1	C734	B1	IC300	B4	R105	*E1	R569	*D3	R682	*B3	R774	*A3		
C304	B3	C624	*C2	C735	*B1	IC301	A4	R106	*E1	R570	*C4	R683	*A1	R775	*A3		
C305	A3	C625	C1	C736	B1	IC302	B4	R107	*E1	R571	*D4	R684	*A1	R776	*A3		
C306	C4	C626	C1	C737	B1	IC303	A4	R108	*E1	R572	*D4	R685	B1	R777	*A3		
C307	B4	C627	C1	C738	B1	IC304	B3	R109	*E1	R573	*D3	R686	B1	R778	*A3		
C308	B3	C628	C1	C739	A2	IC305	A3	R110	*E2	R574	*D3	R687	B1	R779	*A3		
C309	A4	C629	*C1	C740	*A2	IC306	A3	R111	*E2	R575	D4	R688	B1	R780	C1		
C311	C3	C630	*C1	C741	A2	IC307	A3	R112	*E2	R576	D4	R689	B1	R781	A1		
C312	A3	C631	*C1	C742	*A2	IC500	E4	R113	*E2	R577	D3	R690	B1	R782	A1		
C313	A3	C632	*C1	C743	A2	IC501	*E3	R114	*E2	R578	*D4	R691	*A1	R783	*A1		
C314	B4	C633	C1	C744	*A2	IC502	E4	R115	*E2	R579	*D4	R692	*A1	R784	*A1		
C315	A4	C634	C1	C745	A2	IC503	E3	R116	*E2	R580	*D4	R693	A1	R785	A1		
C316	C4	C635	C1	C746	*A2	IC504	D3	R117	*E2	R581	D4	R694	*A1	R786	A1		
C317	B3	C636	C1	C747	A2	IC505	C3	R118	*E2	R582	*D3	R695	B1	R787	A1		
C318	B4	C637	C1	C748	A2	IC506	B3	R150	*E2	R583	*C4	R696	B1	R788	A1		
C319	C4	C638	*C1	C749	A2	IC550	C4	R200	*D1	R584	D4	R697	B1	R789	A1		
C320	A3	C639	C1	C750	*A2	IC551	D4	R201	*D1	R585	D4	R698	*B1	R790	A1		
C321	B3	C640	C1	C751	A2	IC552	D4	R202	*D1	R600	*C4	R699	*A1	R791	*A1		
C322	B3	C641	*B1	C752	A2	IC553	D4	R203	*D1	R601	*C2	R700	*B2	R792	*A1		
C500	*D4	C642	B2	C753	*A2	IC554	C3	R204	*D1	R602	*C2	R701	*B2	R793	A1		
C501	*D4	C643	A3	C754	*A2	IC555	*D3	R205	*D1	R603	*C2	R702	*C2	R794	*A1		
C502	E4	C644	*A2	C755	A2	IC556	D3	R206	*D1	R604	*C2	R703	C2	R795	A1		
C503	E4	C645	B2	C756	*A3	IC557	D3	R207	*D1	R605	*C3	R704	*C2	R796	A1		
C504	*E4	C646	*A2	C757	*A3	IC600	*C2	R208	*D1	R606	*C3	R705	*C2	R797	A1		
C505	E3	C647	*A2	C758	A3	IC601	C4	R209	*D1	R607	*C2	R706	*C2	R798	*A1		
C506	*E3	C648	A2	C759	A3	IC602	C2	R210	*D2	R608	*C2	R707	*C2	R799	*A1		
C507	*E4	C649	A2	C760	*B1	IC603	C2	R211	*D2	R609	*C2	R708	*B2				
C508	*E4	C650	*A2	C761	*B1	IC604	C1	R212	*D2	R610	*D2	R709	*B2	RV100	E1		
C509	*E4	C651	B2	C765	A2	IC605	C1	R213	*D2	R611	*D2	R710	*C2	RV101	E1		
C510	*E4	C652	B2	C766	*A2	IC606	A2	R214	*D2	R612	C2	R711	*C1	RV200	D1		
C511	E3	C653	B2	C767	A1	IC607	*B3	R215	*D2	R613	C2	R712	*C1	RV201	D1		
C512	D3	C655	*B2	C768	A1	IC608	*B1	R216	*D2	R614	*C2	R713	*C1	RV500	E4		
C513	*D3	C656	A2	C769	*A1	IC650	B1	R217	*D2	R615	*C2	R714	C1	RV501	D4		
C514	E3	C657	A2	C770	*A1	IC651	B1	R218	*D2	R616	*C1	R715	*C1	RV600	C1		
C515	*C3	C658	B2	C771	A1	IC652	B1	R250	*D2	R618	C2	R716	*C1	RV601	B1		
C516	*B3	C659	*B3	C772	A1	IC700	*B2	R300	*B3	R619	C2	R717	*B2	RV700	C1		
C517	C3	C660	*B3	C773	*A1	IC701	*C2	R301	*A4	R620	*C2	R718	*B2	RV701	B1		
C518	B3	C661	A3	C774	*A1	IC702	*C1	R302	*B3	R621	C1	R719	*C2	RV702	A2		
C519	*C3	C662	B3	C775	A1	IC703	B2	R303	*A4	R622	C1	R720	*C2				
C520	*B3	C663	*C1	C776	*A1	IC704	B1	R304	A3	R623	C1	R721	B2	S101	E2		
C521	*C3	C664	*C1	C777	*A1	IC705	B1	R305	B3	R624	C1	R722	B2	S201	D2		
C522	*B3	C665	B2	C778	A1	IC706	*A3	R500	*D4	R625	*C1	R723	*B2	S600	B3		
C523	*C3	C666	*B2	C779	A1	IC750	A1	R501	*D4	R626	*C1	R724	*B2	S700	A3		
C524	*B3	C667	B1	C780	*B1	IC751	A1	R502	*D4	R627	*C1	R725	*B1				
C525	C3	C668	B1	C781	*B1	IC752	A1	R503	E4	R629	C1	R726	*B2	TP100	E1		
C526	B3	C669	*A1	C782	*B1			R504	E4	R630	C1	R727	B2	TP200	D1		
C527	*C3	C670	*B1	C783	*B1	L500	E4	R505	E4	R631	*C1	R728	B2	TP500	E4		
C528	*B3	C671	B1	C784	*A2	L501	E4	R508	*E4	R632	C1	R729	*B2	TP501	E3		
C550	*C4	C672	B1			L502	*C3	R509	*E4	R633	C1	R730	B1	TP502	C4		
C551	*D3	C673	*A1	CN3	C4	L503	*B3	R510	*E4	R634	*C1	R731	B1	TP503	C3		
C552	*D4	C674	*B1			L504	*C3	R511	*C3	R635	*C1	R732	B1	TP504	B3		
C553	*D4	C675	B1	D300	*B4	L505	*B3	R512	*B3	R636	*D1	R733	B1	TP550	D3		
C554	*D4	C676	*A1	D301	*A3	L550	D4	R513	*C3	R637	*D1	R734	*B1	TP551	D4		
C555	*D4	C677	*B1	D302	*B3	L551	*D3	R514	*C3	R638	*B1	R735	*B1	TP552	D3		
C556	*D4	C678	A1	D303	*A4	L552	*D3	R515	*C3	R639	*B1	R736	*B1	TP553	D4		

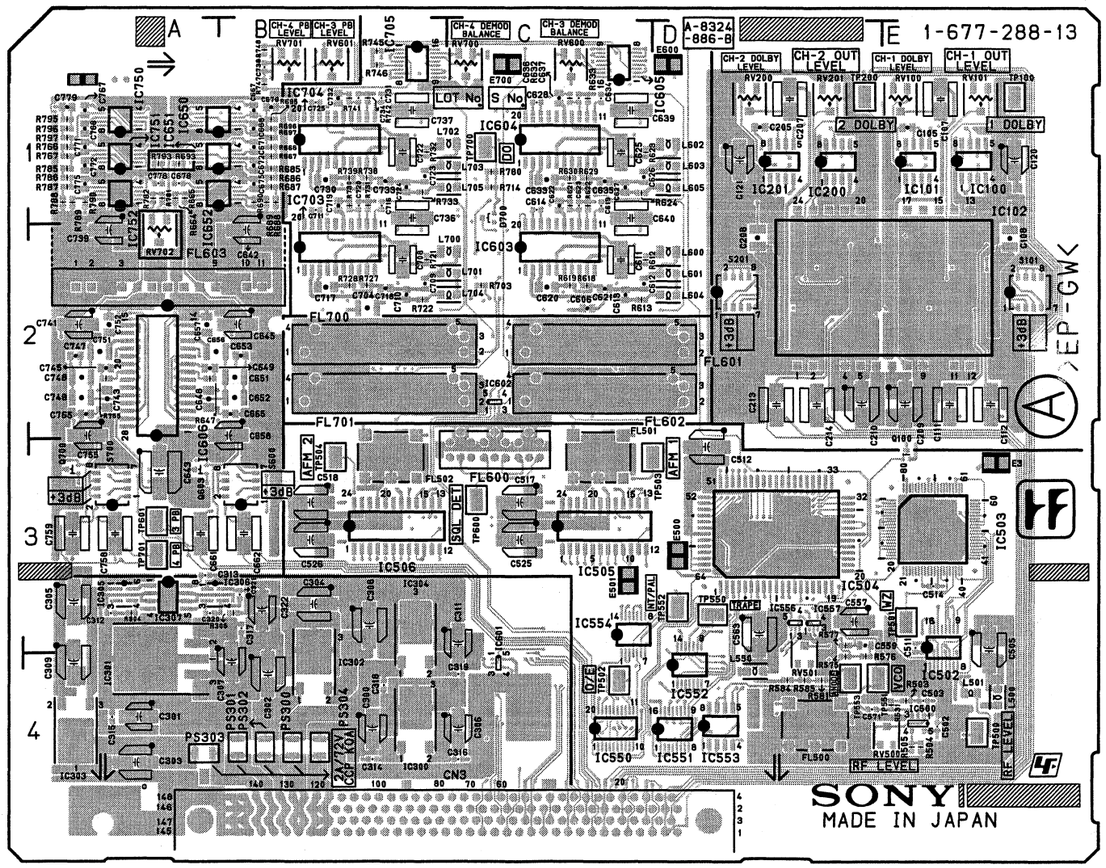

AU-272 -A SIDE-
SUFFIX: -13

4-10 (b)

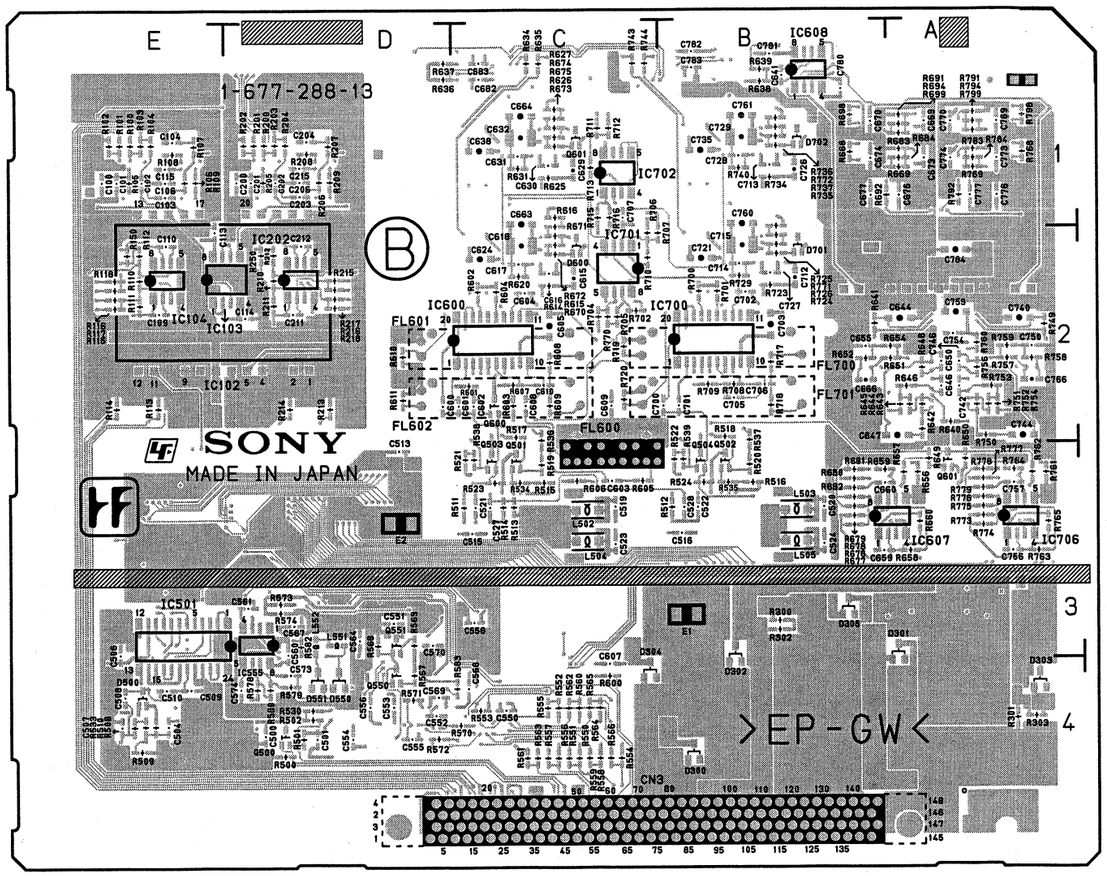

AU-272 -B SIDE-
SUFFIX: -13

AU-272
SUFFIX: -12

AU-272 (1-677-288-12)

C100	*E1	C601	*C2	C731	*B1	IC602	C2	R214	*D2	R613	*C2	R732	*B1
C101	*E1	C602	*C2	C732	B1	IC603	C2	R215	*D2	R614	*C2	R733	*B1
C102	*E1	C603	*C3	C733	B1	IC604	C1	R216	*D2	R615	*C2	R734	*B1
C103	*E1	C604	*C2	C734	*B1	IC605	*D1	R217	*D2	R616	*C1	R735	*B1
C104	*E1	C605	*C2	C735	B1	IC606	A2	R218	*D2	R617	*C1	R736	*B1
C105	*E1	C606	C2	C736	*B1	IC607	*A3	R250	*D2	R618	C2	R737	*B1
C106	*E1	C607	*C4	C737	*B1	IC608	A1	R300	*B3	R619	C2	R738	B1
C107	E1	C608	*C2	C738	*A1	IC700	*B2	R301	*A4	R620	*C2	R739	B1
C108	E2	C609	*C2	C739	A1	IC701	*C2	R302	*B3	R621	*C1	R740	*B1
C109	*E2	C610	*C2	C740	A2	IC702	*C1	R303	*A4	R622	C1	R741	*B1
C110	*E2	C611	C1	C741	A2	IC703	B2	R500	*D4	R623	*C1	R742	B1
C111	E2	C612	*D2	C742	*A2	IC704	B1	R501	*D4	R624	*C1	R743	*B1
C112	E2	C613	*C2	C743	A2	IC705	*B1	R502	*D4	R625	*C1	R744	*B1
C200	*D1	C614	C1	C744	A3	IC706	*A3	R503	*D4	R626	*C1	R745	*C1
C201	*D1	C615	C2	C745	A2			R504	*E4	R627	*C1	R746	*C1
C202	*D1	C616	*C2	C746	*A2	L300	B4	R505	*E4	R628	*C1	R747	*B1
C203	*D1	C617	*C2	C747	A2	L301	A4	R506	*E4	R629	C1	R748	*B1
C204	*D1	C618	*C2	C748	A2	L302	B4	R507	*E4	R630	C1	R749	*A2
C205	*D1	C619	*C2	C749	A2	L303	A4	R508	*E4	R631	*C1	R750	A2
C206	*D1	C620	C2	C750	*A2	L500	E4	R509	*E4	R632	*C1	R751	*A2
C207	D1	C621	C2	C751	A2	L501	E4	R510	*E4	R633	C1	R752	*A2
C208	D2	C622	C1	C752	*A2	L502	*C3	R511	*C3	R634	*C1	R753	*A2
C209	E2	C623	*C1	C753	A2	L503	*B3	R512	*B3	R635	*C1	R754	A2
C210	D2	C624	C2	C754	*A2	L504	*C3	R513	*C3	R636	*D1	R755	*A2
C211	*D2	C625	C1	C755	A2	L505	*B3	R514	*C3	R637	*D1	R756	A2
C212	*D2	C626	*D1	C756	*A3	L550	D4	R515	*C3	R638	*B1	R757	*A2
C213	D2	C627	*C1	C757	*A3	L600	D2	R516	*B3	R639	*B1	R758	*A2
C214	D2	C628	C1	C758	A3	L601	C2	R517	*C2	R640	*A2	R759	*A2
C300	B4	C629	C1	C759	A3	L602	D1	R518	*B2	R641	*B2	R760	*A2
C301	A4	C630	*C1			L603	C1	R519	*C3	R642	A2	R761	*A3
C302	B3	C631	*C1	CN1	E4	L700	C2	R520	*B3	R643	*A2	R762	*A3
C303	A4	C632	*C1	CN3	C4	L701	B2	R521	*C3	R644	*B2	R763	*A3
C304	B3	C633	C1	CN4	E4	L702	C1	R522	*B3	R645	B2	R764	*A3
C305	A3	C634	*C1			L703	B1	R523	*C3	R646	*A2	R765	*A3
C306	C4	C635	C1	D300	*B4			R524	*B3	R647	*A2	R770	*C2
C307	B3	C636	C1	D301	*A3	LV550	D4	R530	*D4	R648	A2	R771	*B1
C308	B3	C637	*C1	D302	*B3			R531	*E4	R649	*A3	R772	*B1
C309	A4	C638	C1	D303	*A4	PS300	B4	R532	*E4	R650	*A3	R773	*A3
C310	B4	C639	*C1	D304	*C4	PS301	B4	R533	*E4	R651	*A2	R774	*A3
C311	C4	C640	*C1	D500	*E4	PS302	B4	R534	*C3	R652	*A2	R775	*A3
C500	*D4	C641	*A1	D550	*D4	PS303	B4	R535	*B3	R654	*A2	R776	*A3
C501	*D4	C642	B1	D600	*C2	PS304	B4	R536	*C2	R655	*A3	R777	*A3
C502	*E4	C643	A2	D601	*C1			R537	*B2	R656	*A3	R778	*A3
C503	*E4	C644	A2	D700	C1	Q100	*E2	R538	*C3	R657	*A3	R779	*A3
C504	*E4	C645	B2	D701	*B2	Q500	*D4	R539	*B3	R658	*A3		
C505	E3	C646	*A2	D702	*B1	Q501	*C3	R550	*C4	R659	*A3	RV100	E1
C506	*E3	C647	B3			Q502	*B3	R551	*C4	R660	*A3	RV101	E1
C507	*E4	C648	B2	E500	D3	Q503	*C3	R552	*C4	R670	*C2	RV200	D1
C508	*E4	C649	A2	E501	C3	Q504	*B3	R553	*C4	R671	*C1	RV201	D1
C509	*E4	C650	*A2	E600	C1	Q550	*D4	R554	*C4	R672	*C1	RV500	E4
C510	*E4	C651	A2	E700	B1	Q551	*D3	R555	*C4	R673	*C1	RV600	C1
C511	E3	C652	B2			Q552	*D4	R556	*C4	R674	*C1	RV601	B1
C512	D3	C653	B2	FL500	D4	Q600	*C2	R557	*C4	R675	*C1	RV700	B1
C513	*D3	C655	*A2	FL501	C3	Q601	*A3	R558	*C4	R676	*B3	RV701	B1
C514	*E3	C656	A2	FL502	B3	Q602	*A3	R559	*C4	R677	*B3		
C515	*C3	C657	*A2	FL600	C3	Q603	A3	R560	*C4	R678	*B3	S101	E2
C516	*B3	C658	B2	FL601	C2	Q700	A3	R561	*C4	R679	*B3	S201	D2
C517	C3	C659	*B3	FL602	C2			R562	*C4	R680	*B3	S600	B3
C518	B3	C660	*A3	FL603	A1	R100	*E1	R563	*C4	R681	*B3	S700	A3
C519	*C3	C661	A3	FL700	B2	R101	*E1	R564	*C4	R682	*B3		
C520	*B3	C662	B3	FL701	B2	R102	*E1	R565	*C4	R700	*B2	TP100	E1
C521	*C3	C700	*C2			R103	*E1	R566	*C4	R701	*B2	TP200	D1
C522	*B3	C701	*B2	IC100	E1	R104	*E1	R567	*D4	R702	*C2	TP500	E4
C523	*C3	C702	*B2	IC101	E1	R105	*E1	R568	*D3	R703	C2	TP501	E3
C524	*B3	C703	*B2	IC102	E2	R106	*E1	R569	*D3	R704	*C2	TP502	C4
C525	C3	C704	B2	IC103	*E2	R107	*E1	R570	*D4	R705	*C2	TP503	C3
C526	B3	C705	*B2	IC104	*E2	R108	*E1	R571	*D4	R706	*C2	TP504	B3
C527	*C3	C706	*B2	IC200	D1	R109	*E1	R572	*D4	R707	*C2	TP550	D3
C528	*B3	C707	*C1	IC201	D1	R110	*E2	R573	*D3	R708	*B2	TP551	E4
C550	*C4	C708	B1	IC202	*D2	R111	*E2	R574	*D3	R709	*B2	TP552	D3
C551	*D3	C709	*C2	IC300	B4	R112	*E2	R575	*D4	R710	*C2	TP600	C3
C552	*D4	C710	*B2	IC301	A3	R113	*E2	R576	*D4	R711	*C1	TP601	A3
C553	*D4	C711	B1	IC302	B3	R114	*E2	R577	*D4	R712	*C1	TP700	C1
C554	*D4	C712	B2	IC303	A4	R115	*E2	R578	*D4	R713	*C1	TP701	A3
C555	*D4	C713	*B1	IC304	B3	R116	*E2	R579	*E4	R714	C1		
C556	*D4	C714	*B2	IC500	E4	R117	*E2	R580	*E4	R715	*C1	*:B SIDE	
C557	D3	C715	*B2	IC501	*E3	R118	*E2	R581	*D4	R716	*C1		
C558	*C3	C716	*B2	IC502	E3	R150	*E2	R582	*D3	R717	*B2		
C559	D4	C717	B2	IC503	E3	R200	*D1	R583	*D4	R718	*B2		
C560	*D3	C718	B2	IC504	D3	R201	*D1	R600	*C4	R719	*C2		
C561	*D3	C719	B1	IC505	C3	R202	*D1	R601	*C2	R720	*C2		
C562	*E4	C720	*B1	IC506	B3	R203	*D1	R602	*C2	R721	*B1		
C563	D3	C721	B2	IC550	C4	R204	*D1	R603	*C2	R722	*B2		
C564	*D3	C722	B1	IC551	D4	R205	*D1	R604	*C2	R723	*B2		
C565	*D4	C723	*C1	IC552	D4	R206	*D1	R605	*C3	R724	*B2		
C566	*D3	C724	*B1	IC553	D4	R207	*D1	R606	*C3	R725	*B1		
C567	*D3	C725	B1	IC554	C3	R208	*D1	R607	*C2	R726	*B1		
C568	*D4	C726	B1	IC555	*D3	R209	*D1	R608	*C2	R727	B2		
C569	*D4	C727	*B2	IC556	D3	R210	*D2	R609	*C2	R728	B2		
C570	*D3	C728	*B1	IC557	D3	R211	*D2	R610	*D2	R729	*B2		
C571	*E4	C729	*B1	IC600	*C2	R212	*D2	R611	*D2	R730	*B1		
C600	*D2	C730	B1	IC601	C4	R213	*D2	R612	*C1	R731	B1		

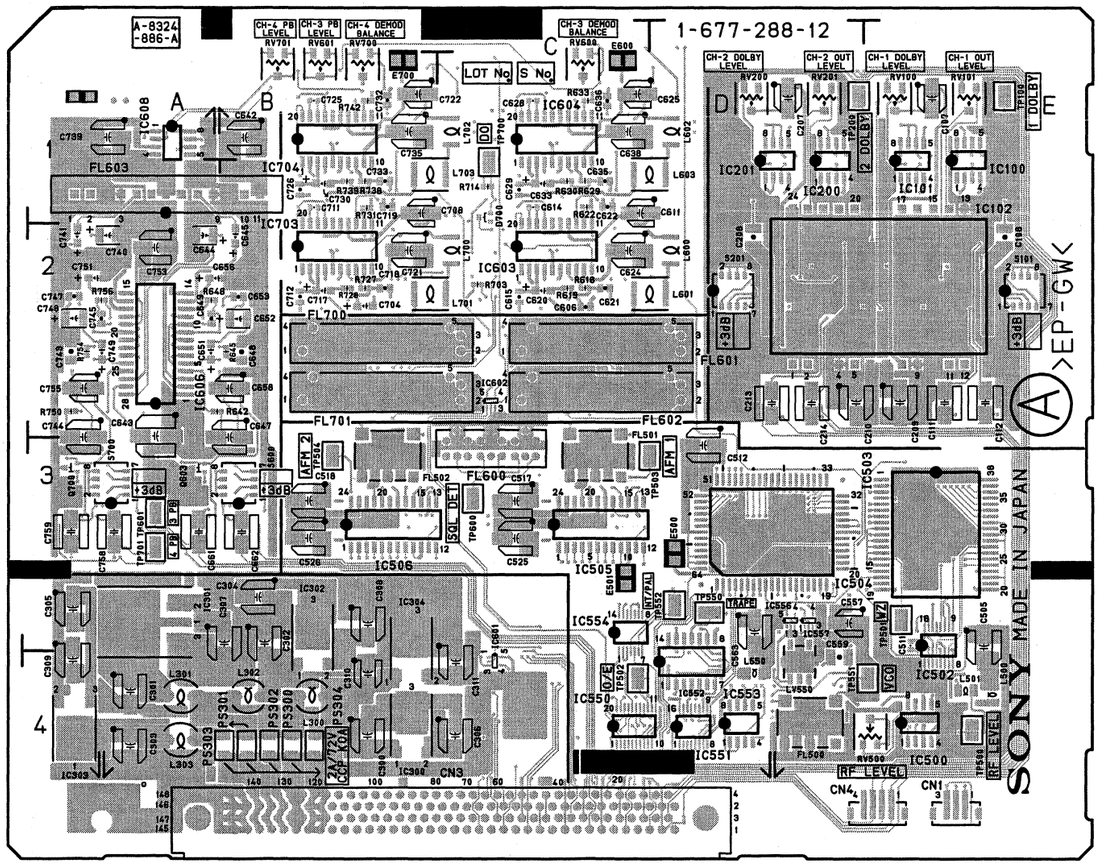

AU-272 -A SIDE-
SUFFIX: -12

4-10 (a)

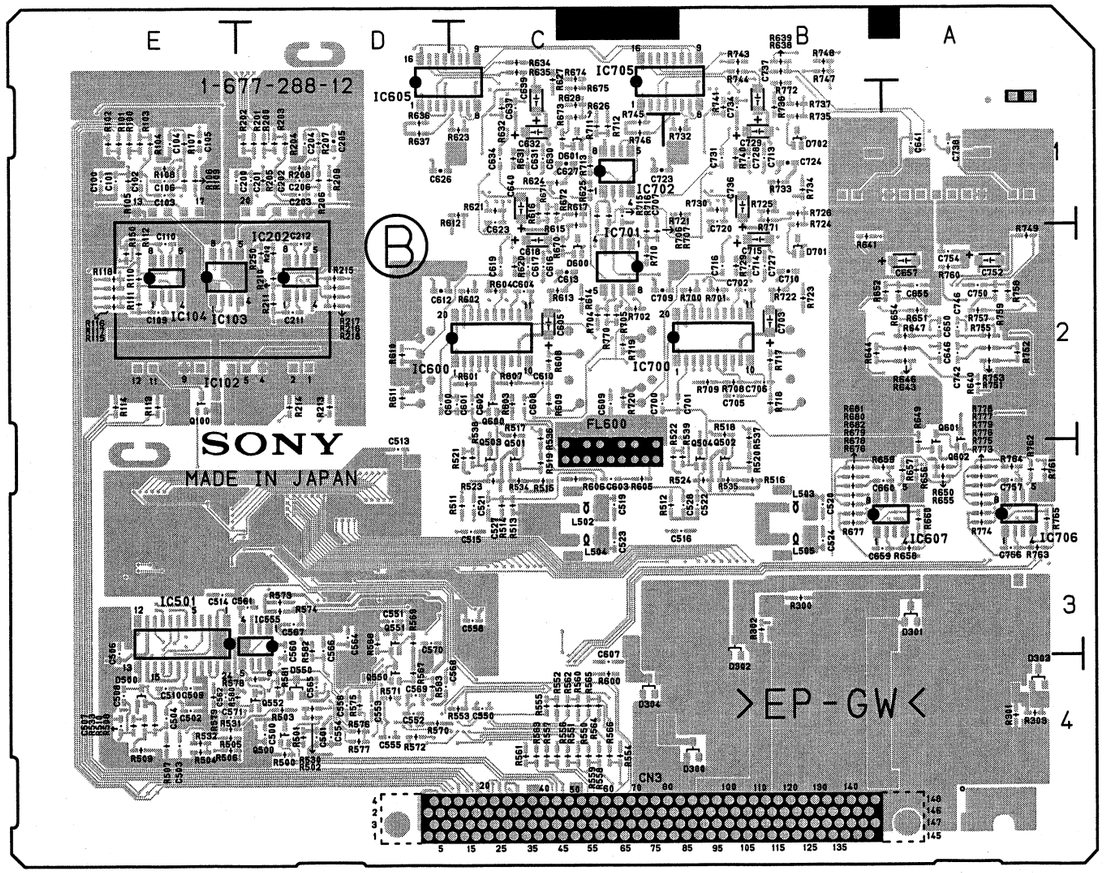

AU-272 -B SIDE-
SUFFIX: -12

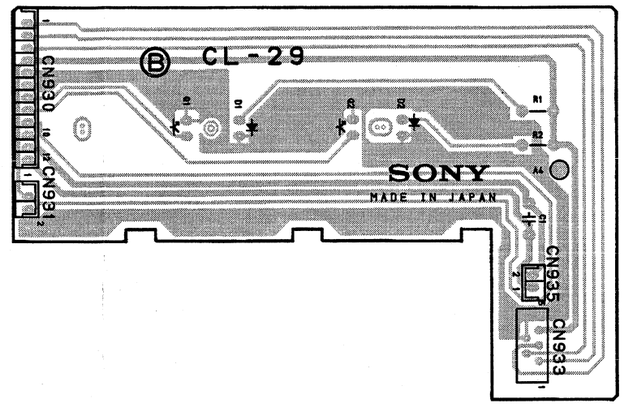

CL-29 -B SIDE-
SUFFIX: -11, 22

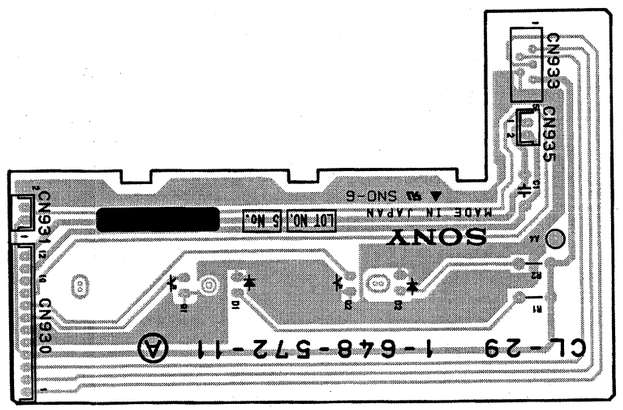

(Circuit pattern: B side)

CL-29 -A SIDE-
SUFFIX: -11, 22

CP-351 (1-677-276-13,21)

C100	*A2	FB714	*C4
C101	*A2	FB715	*D4
C130	*A3	FB716	*D4
C131	*A3	FB717	*D4
C133	*A3		
C200	*B2	R104	*A2
C201	*B2	R105	*A2
C230	*B3	R106	*A2
C231	*B3	R107	*A2
C233	*B3	R204	*B2
C300	*C2	R205	*B2
C301	*C2	R206	*B2
C330	*C3	R207	*B2
C331	*C3	R304	*C2
C333	*C3	R305	*C2
C400	*D2	R306	*C2
C401	*D2	R307	*C2
C430	*D3	R404	*D2
C431	*D3	R405	*D2
C433	*D3	R406	*D2
C500	*E2	R407	*D2
C501	*E2	R502	*E2
C502	*E3	R503	*E2
C503	*E3	R504	*E2
C533	*E3	R505	*E2
C601	*A4	R1102	*A2
C602	*B4	R1103	*A2
C603	*A4	R1130	*A3
C604	*B4	R1131	*A3
C633	*A4	R1202	*B2
C634	*B4	R1203	*B2
C700	*C4	R1230	*B3
C701	*C4	R1231	*B3
C702	*D4	R1302	*C2
C703	*D4	R1303	*C2
C704	*D4	R1330	*C3
		R1331	*C3
CN1	C5	R1402	*D2
CN100	A2	R1403	*D2
CN101	A3	R1430	*D3
CN300	C2	R1431	*D3
CN301	C3	R1502	*E2
CN500	E2	R1503	*E2
CN501	E3	R1506	*E3
CN600	A4	R1509	*E3
CN700	C4	R1600	*A4
CN701	D4	R1601	*A4
		R1603	*B4
FB100	*A2	R1604	*B4
FB101	*A2	R1702	*C4
FB132	*A3	R1703	*C4
FB133	*A3	R1705	*D4
FB135	*A3	R1706	*D4
FB136	*A2		
FB200	*B2	S100	A1
FB201	*B2	S200	B1
FB232	*B3	S300	C1
FB233	*B3	S400	D1
FB235	*B3	S500	E1
FB236	*B2		
FB300	*C2	*:B SIDE	
FB301	*C2		
FB332	*C3		
FB333	*C3		
FB335	*C3		
FB336	*C2		
FB400	*D2		
FB401	*D2		
FB432	*D3		
FB433	*D3		
FB435	*D3		
FB436	*D2		
FB500	*E2		
FB501	*E2		
FB505	*E3		
FB508	*E3		
FB510	*E3		
FB511	*E2		
FB605	*A4		
FB606	*B4		
FB607	*A4		
FB608	*B4		
FB609	*A4		
FB610	*B4		
FB700	*C4		
FB701	*C4		
FB708	*D4		
FB709	*D4		
FB710	*D4		
FB711	*C4		
FB712	*C4		
FB713	*C4		

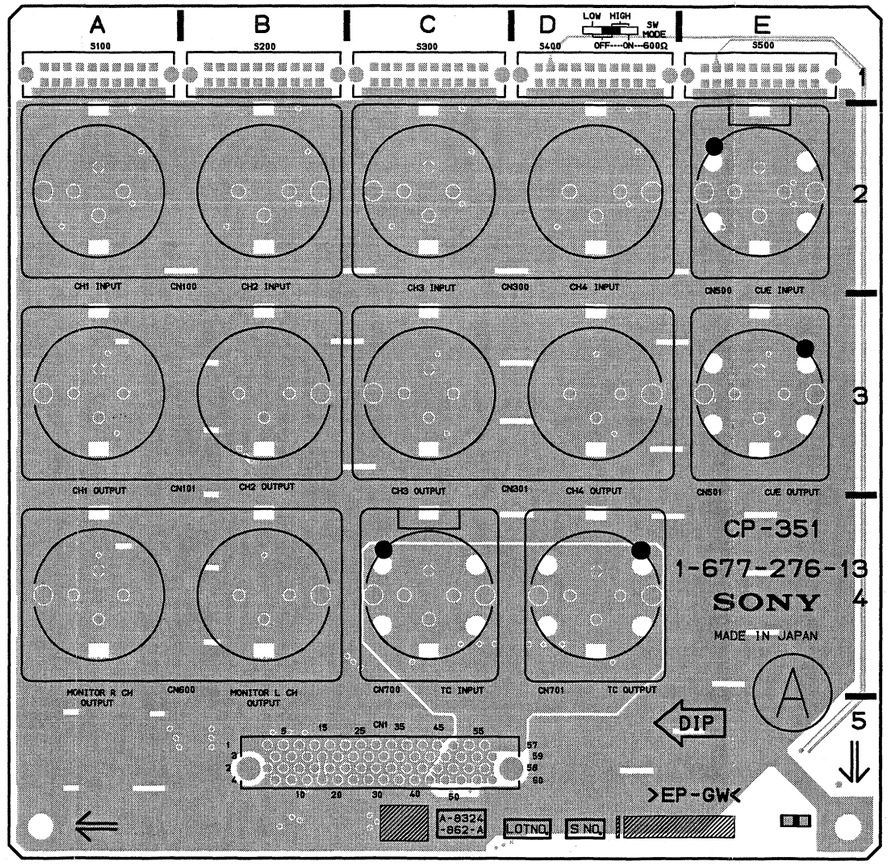

CP-351 -A SIDE-
SUFFIX: -13, -21

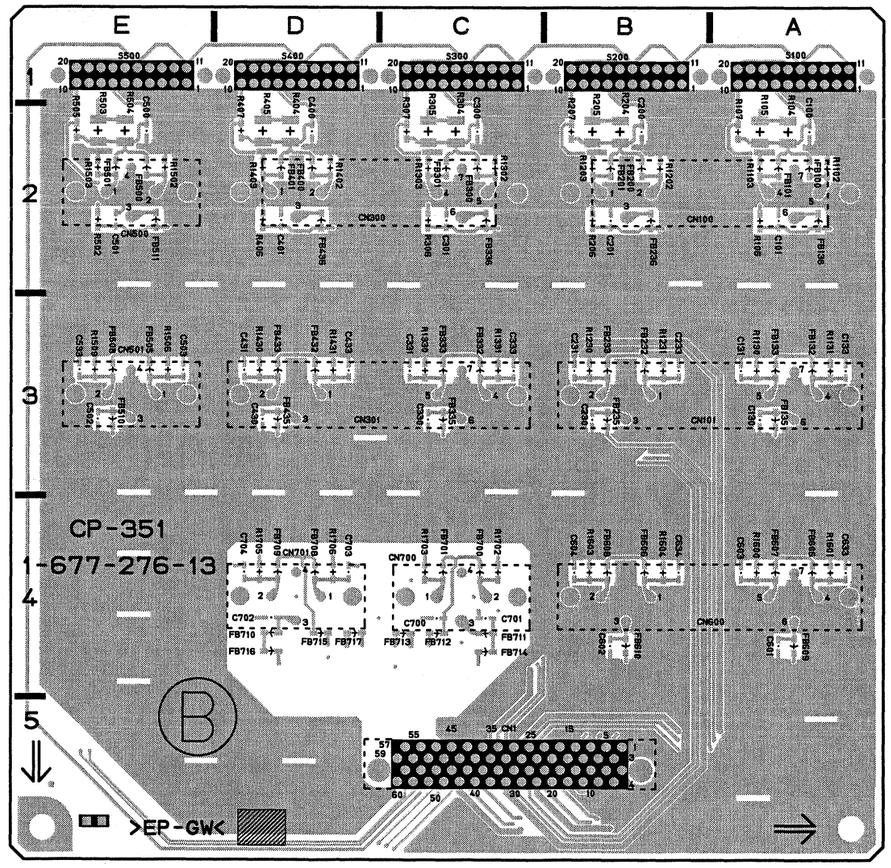

CP-351 -B SIDE-
SUFFIX: -13, -21

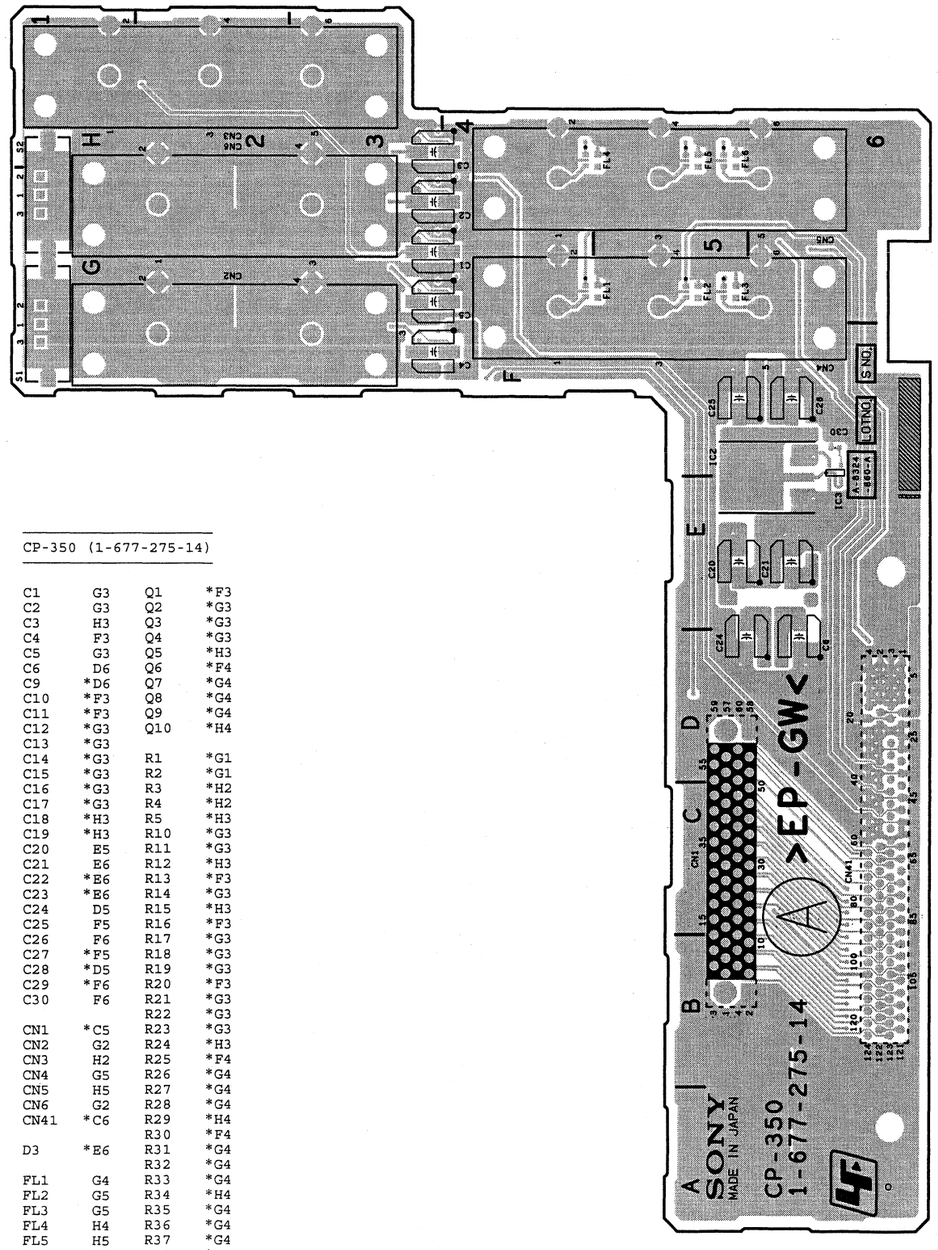

CP-350 -A SIDE-
SUFFIX: -14

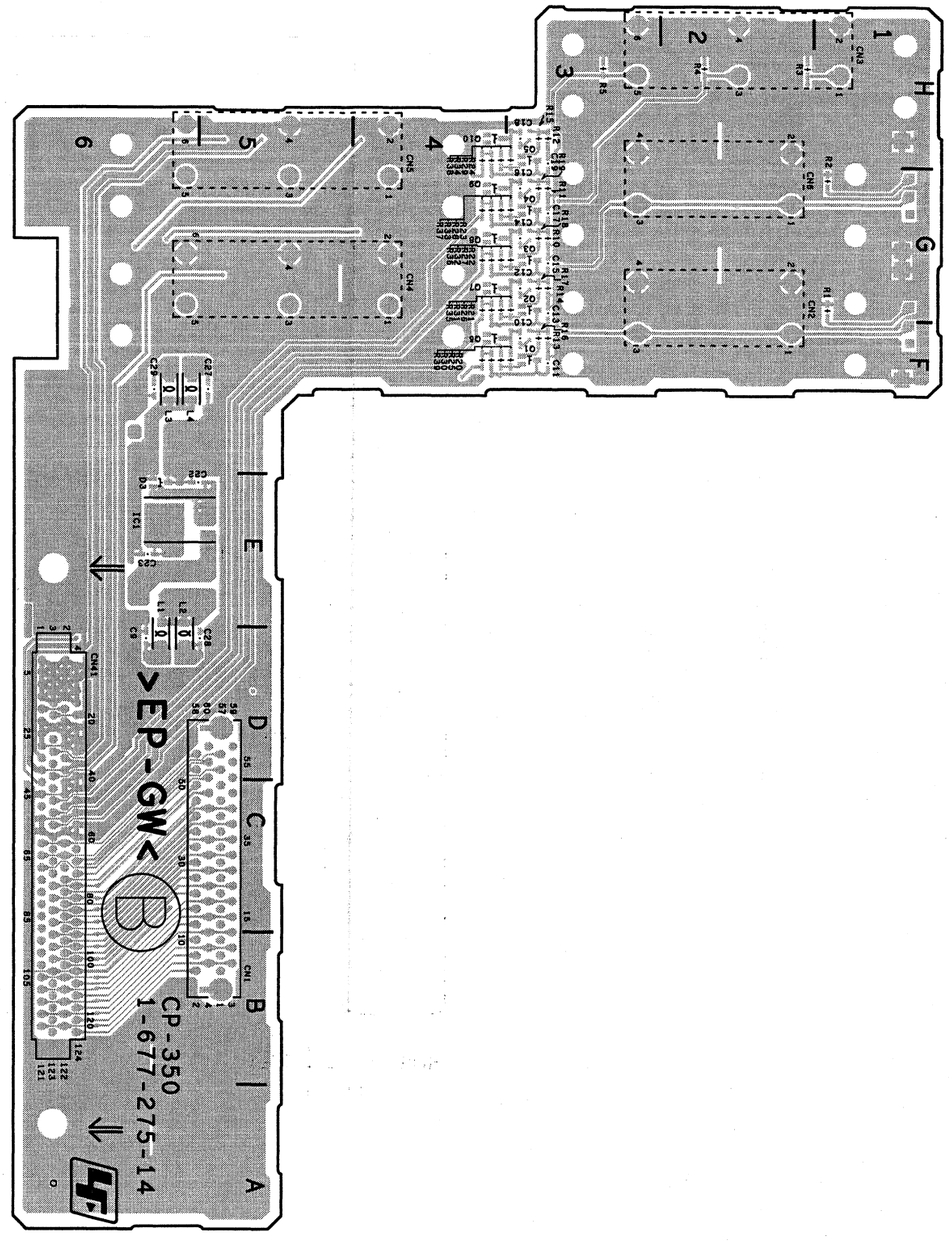

CP-350 -B SIDE-
SUFFIX: -14

CP-350 (1-677-275-14)

C1	G3	Q1	*F3
C2	G3	Q2	*G3
C3	H3	Q3	*G3
C4	F3	Q4	*G3
C5	G3	Q5	*H3
C6	D6	Q6	*F4
C9	*D6	Q7	*G4
C10	*F3	Q8	*G4
C11	*F3	Q9	*G4
C12	*G3	Q10	*H4
C13	*G3		
C14	*G3	R1	*G1
C15	*G3	R2	*G1
C16	*G3	R3	*H2
C17	*G3	R4	*H2
C18	*H3	R5	*H3
C19	*H3	R10	*G3
C20	E5	R11	*G3
C21	E6	R12	*H3
C22	*E6	R13	*F3
C23	*E6	R14	*G3
C24	D5	R15	*H3
C25	F5	R16	*F3
C26	F6	R17	*G3
C27	*F5	R18	*G3
C28	*D5	R19	*G3
C29	*F6	R20	*F3
C30	F6	R21	*G3
		R22	*G3
CN1	*C5	R23	*G3
CN2	G2	R24	*H3
CN3	H2	R25	*F4
CN4	G5	R26	*G4
CN5	H5	R27	*G4
CN6	G2	R28	*G4
CN41	*C6	R29	*H4
		R30	*F4
D3	*E6	R31	*G4
		R32	*G4
FL1	G4	R33	*G4
FL2	G5	R34	*H4
FL3	G5	R35	*G4
FL4	H4	R36	*G4
FL5	H5	R37	*G4
FL6	H5	R38	*H4
		R39	*F4
IC1	*E6		
IC2	E6	S1	F1
IC3	F6	S2	G1
L1	*D6	*:B SIDE	
L2	*D6		
L3	*F6		
L4	*F6		

CP-350
SUFFIX: -13

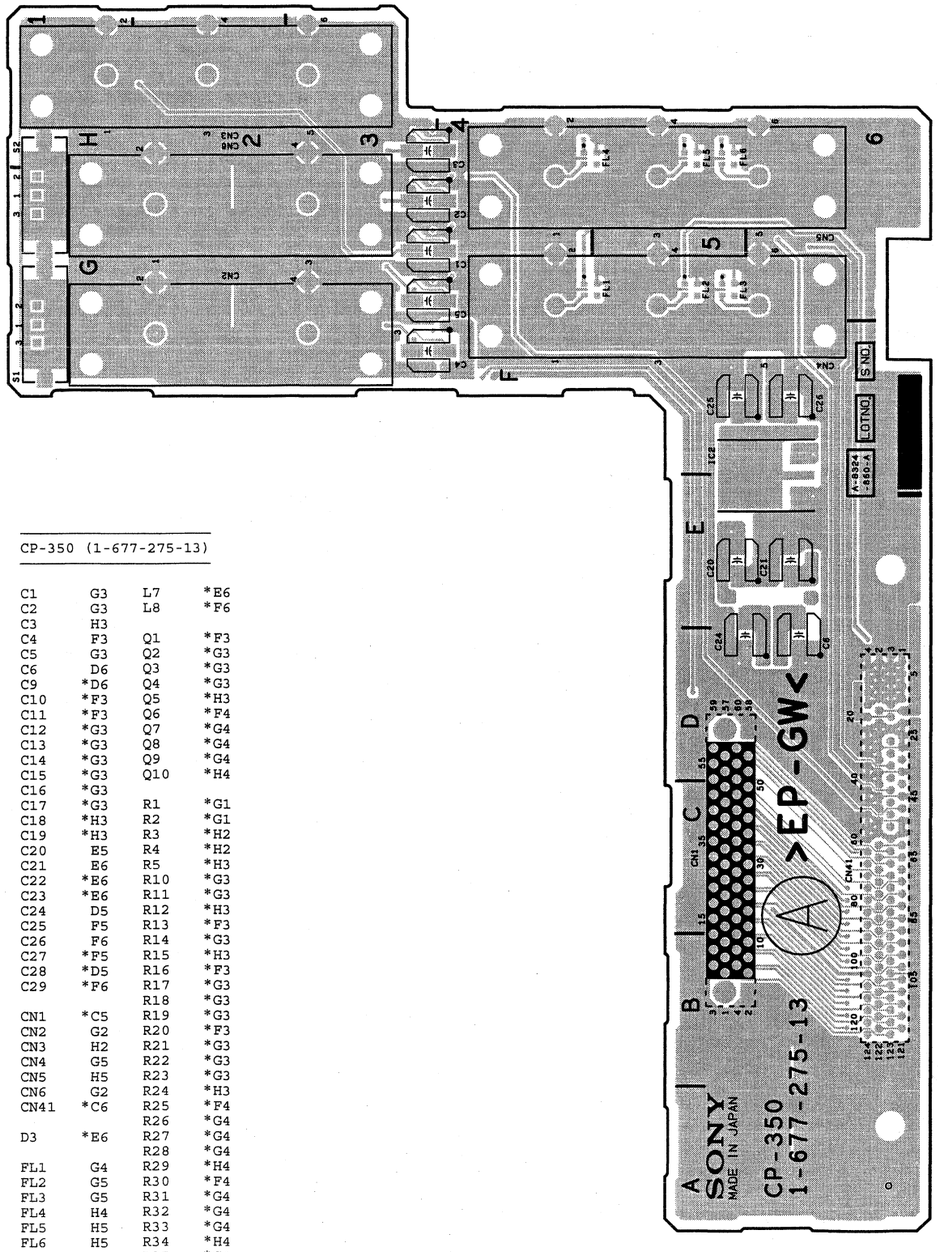

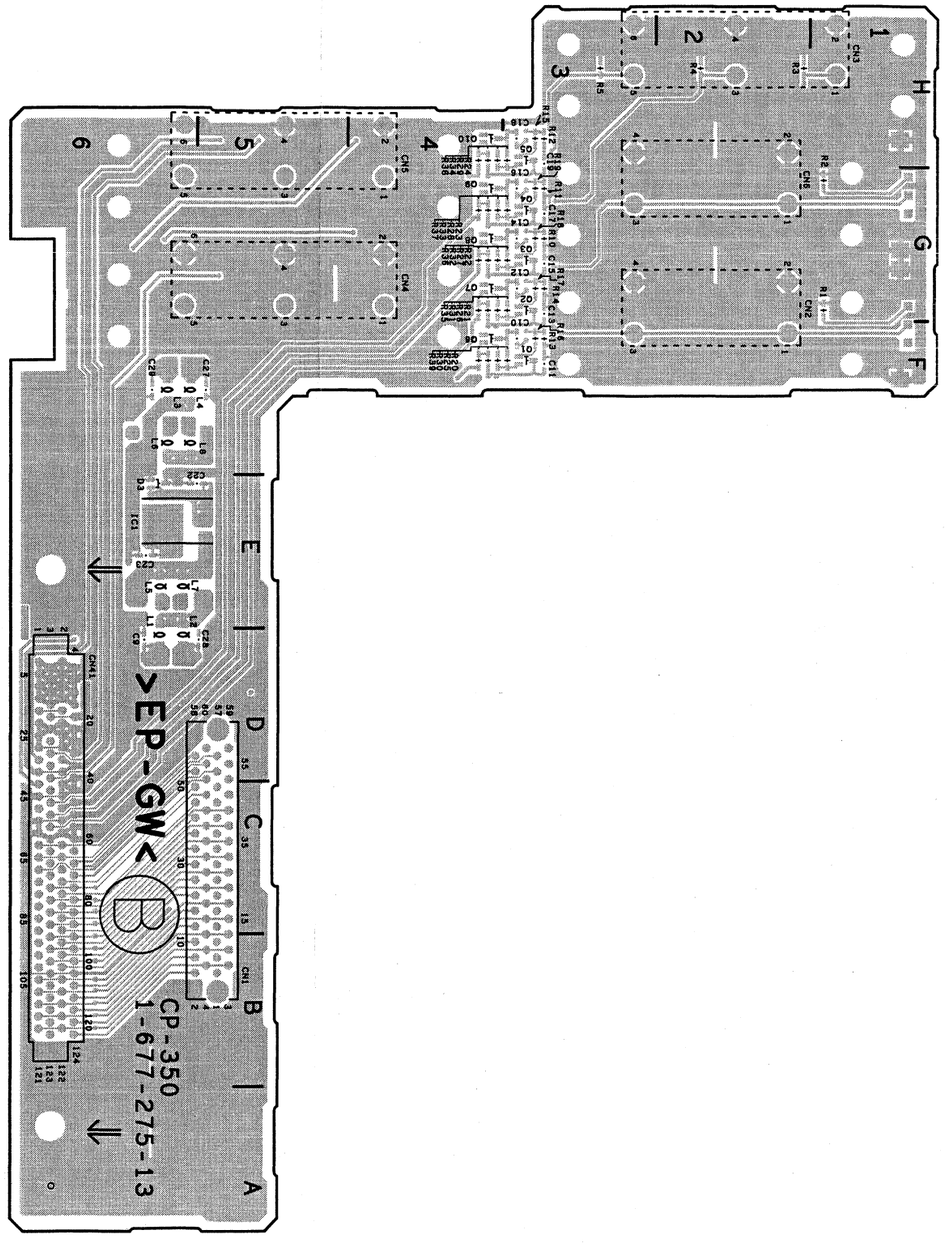

CP-350 (1-677-275-13)

C1	G3	L7	*E6
C2	G3	L8	*F6
C3	H3		
C4	F3	Q1	*F3
C5	G3	Q2	*G3
C6	D6	Q3	*G3
C9	*D6	Q4	*G3
C10	*F3	Q5	*H3
C11	*F3	Q6	*F4
C12	*G3	Q7	*G4
C13	*G3	Q8	*G4
C14	*G3	Q9	*G4
C15	*G3	Q10	*H4
C16	*G3		
C17	*G3	R1	*G1
C18	*H3	R2	*G1
C19	*H3	R3	*H2
C20	E5	R4	*H2
C21	E6	R5	*H3
C22	*E6	R10	*G3
C23	*E6	R11	*G3
C24	D5	R12	*H3
C25	F5	R13	*F3
C26	F6	R14	*G3
C27	*F5	R15	*H3
C28	*D5	R16	*F3
C29	*F6	R17	*G3
		R18	*G3
CN1	*C5	R19	*G3
CN2	G2	R20	*F3
CN3	H2	R21	*G3
CN4	G5	R22	*G3
CN5	H5	R23	*G3
CN6	G2	R24	*H3
CN41	*C6	R25	*F4
		R26	*G4
D3	*E6	R27	*G4
		R28	*G4
FL1	G4	R29	*H4
FL2	G5	R30	*F4
FL3	G5	R31	*G4
FL4	H4	R32	*G4
FL5	H5	R33	*G4
FL6	H5	R34	*H4
		R35	*G4
IC1	*E6	R36	*G4
IC2	E6	R37	*G4
		R38	*H4
L1	*D6	R39	*F4
L2	*D6		
L3	*F6	S1	F1
L4	*F6	S2	G1
L5	*E6		
L6	*F6	*:B SIDE	

CP-350 -A SIDE-
SUFFIX: -13

CP-350 -B SIDE-
SUFFIX: -13

CP-371 (1-682-695-12)

C1	A4	C751	B6
C2	A4	C752	B6
C3	A4	C753	A6
C4	*A4	C754	A6
C5	A5	C755	A6
C6	A5	C756	*D1
C7	*A4	C757	A5
C8	A5	C758	A5
C9	A4	C759	*A6
C10	A4	C760	*A5
C11	A4	C761	A5
C12	*A4	C762	*A4
C100	D3	C763	A5
C101	C3	C764	A4
C102	*A3	C765	A6
C104	A3	C766	*A6
C106	*A3		
C107	D6	CL100	*D3
C201	C3	CL101	*A2
C202	*B3	CL200	*D3
C203	A3	CL201	*B2
C204	B3	CL300	*D3
C205	A3	CL301	*C2
C206	*B3	CL400	*D3
C207	D6	CL401	*C2
C301	C3	CL500	*A1
C302	*C3	CL501	*A1
C304	C3	CL502	*A2
C306	*C3	CL503	*B1
C307	D6	CL504	*B1
C401	C3	CL505	*B2
C402	*C3	CL600	*C1
C403	C3	CL601	*C1
C404	C3	CL602	*C2
C405	C3	CL603	*D1
C406	*C3	CL604	*C1
C407	D6	CL605	*C2
C500	*A1	CL710	*B5
C501	*A1		
C502	*B1	CN1	A2
C503	*B1	CN10	B3
C504	*A1	CN11	A4
C505	*B1	CN12	A5
C600	*C1	CN13	A6
C601	*C1	CN14	C4
C602	*D1	CN15	C5
C603	*D1	CN16	C6
C604	*C1	CN42	*B6
C605	*C1	CN710	D1
C701	D5		
C702	*D5	D1	*A4
C703	C5	D500	*B1
C704	C5	D501	*A1
C705	C5	D600	*C1
C706	*D4	D601	*C1
C707	C5	D701	D5
C708	D5	D702	D5
C709	C5	D703	D5
C710	*C5	D704	D5
C711	C5	D705	C5
C712	C5	D706	C5
C713	C5	D707	C5
C714	*C5	D708	*A5
C715	C5	D709	*A6
C716	D5		
C717	D5	E1	*B2
C718	D5	E2	*B1
C719	D5		
C720	C5	F1	D3
C721	C5		
C722	C5	FB1	*D4
C724	B6	FB2	*D4
C725	*B6	FB3	*D5
C726	C4	FB4	*D5
C727	D4		
C730	B5	FL1	*A4
C731	C5	FL2	*A4
C732	A5	FL3	*A4
C733	C4	FL4	*A4
C734	C4	FL5	*A4
C735	C4	FL6	*B5
C736	C4	FL7	*A5
C737	C4	FL8	*A5
C738	C4	FL9	*A5
C739	D4	FL10	*A5
C740	D4	FL11	*A5
C741	D4	FL12	*A5
C742	D4	FL13	*A5
C747	*B6	FL14	*A5
C748	A6	FL15	*A6
C749	A6	FL16	*A6
C750	B5	FL17	*A6

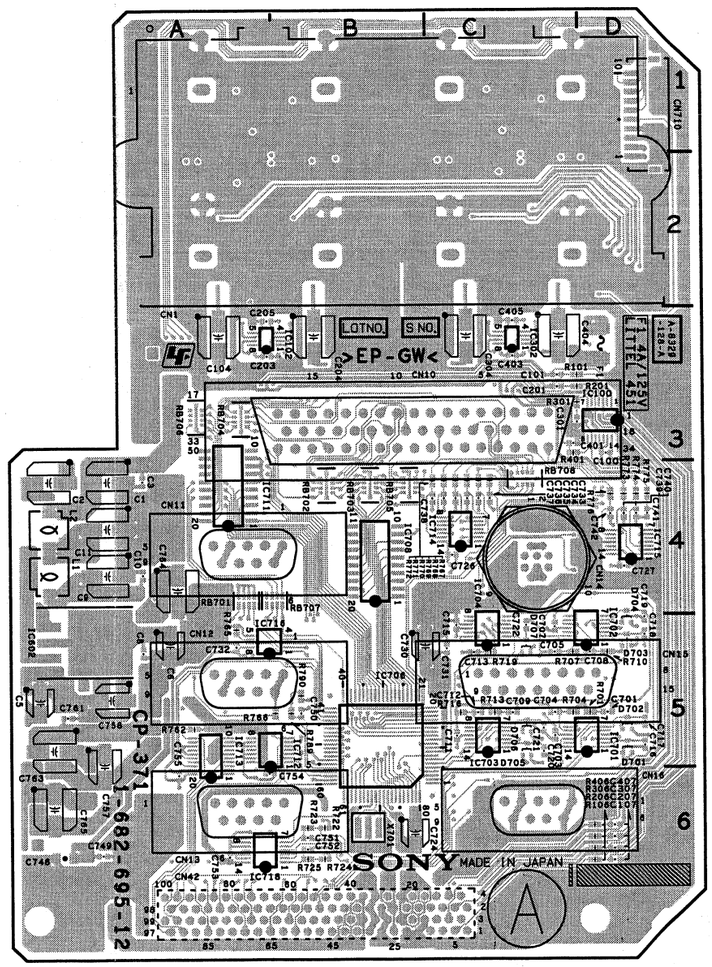

CP-371 -A SIDE-
SUFFIX: -12

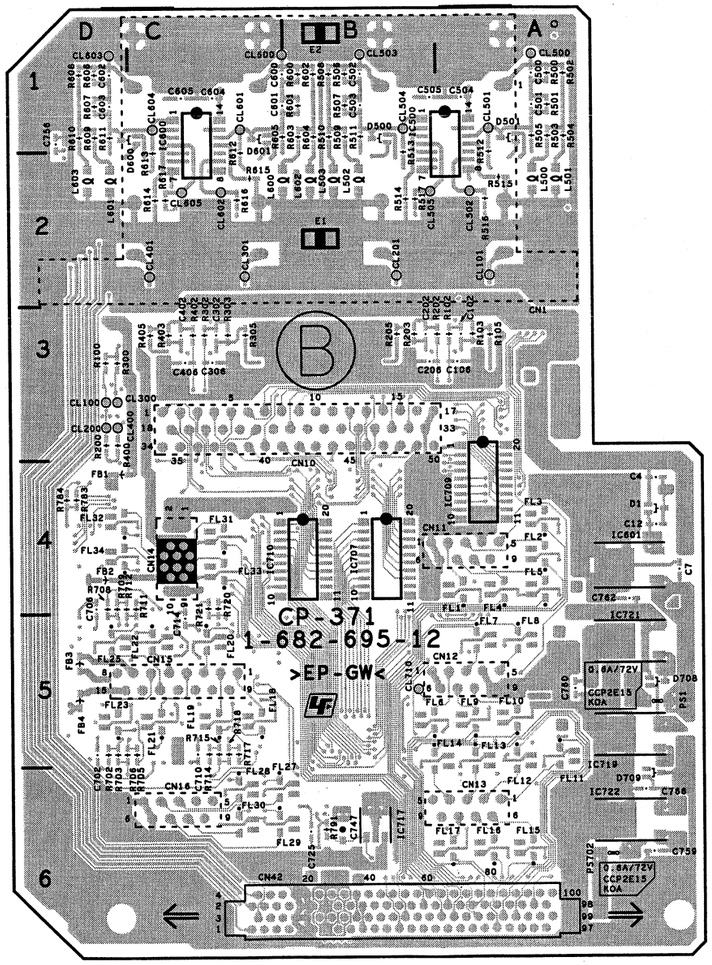

CP-371 -B SIDE-
SUFFIX: -12

FL18	*C5	R510	*B1
FL19	*C5	R511	*B1
FL20	*C5	R512	*A2
FL21	*C5	R513	*B2
FL22	*C5	R514	*B2
FL23	*D5	R515	*A2
FL25	*D5	R516	*A2
FL27	*C6	R517	*B2
FL28	*C6	R600	*B1
FL29	*C6	R601	*B1
FL30	*C6	R602	*B1
FL31	*C4	R603	*B1
FL32	*D4	R604	*B1
FL33	*C4	R605	*C1
FL34	*D4	R606	*D1
		R607	*D1
IC100	D3	R608	*D1
IC102	B3	R609	*D1
IC302	C3	R610	*D1
IC500	*B1	R611	*D1
IC600	*C1	R612	*C2
IC601	*A4	R613	*C2
IC602	A5	R614	*C2
IC701	D5	R615	*C2
IC702	D5	R616	*C2
IC703	C5	R617	*C2
IC704	C5	R701	D5
IC706	B5	R702	*D5
IC707	*B4	R703	*D5
IC708	B4	R704	C5
IC709	*A3	R705	*C5
IC710	*C4	R706	*D5
IC711	A4	R707	C5
IC712	B5	R708	*D4
IC713	A6	R709	*D4
IC714	C4	R710	D5
IC715	D4	R711	*C4
IC716	B5	R712	*D4
IC717	*B6	R713	C5
IC718	B6	R714	*C5
IC719	*A5	R715	*C5
IC721	*A5	R716	C5
IC722	*A6	R717	*C5
		R718	*C5
L1	A4	R719	C5
L2	A4	R720	*C4
L500	*A2	R721	*C4
L501	*A2	R722	B6
L502	*B2	R723	B6
L503	*B2	R724	B6
L600	*C2	R725	B6
L601	*D2	R762	A5
L602	*B2	R765	A5
L603	*D2	R766	A5
		R767	C4
PS1	*A5	R768	C4
PS702	*A6	R769	C4
		R770	C4
R100	*D3	R771	C4
R101	C3	R772	C4
R102	*A3	R773	D4
R103	*A3	R774	D4
R105	*A3	R775	D4
R106	D6	R776	D4
R200	*D3	R783	*D4
R201	C3	R784	*D4
R202	*A3	R789	B5
R203	*B3	R790	B5
R205	*B3	R791	*B6
R206	D6		
R300	*D3	RB701	A4
R301	C3	RB702	B4
R302	*C3	RB703	B4
R303	*C3	RB704	A3
R305	*C3	RB705	B4
R306	D6	RB706	A3
R400	*D3	RB707	A4
R401	C3	RB708	C4
R402	*C3		
R403	*C3	X701	B6
R405	*C3		
R406	D6	*:B SIDE	
R500	*A1		
R501	*A1		
R502	*A1		
R503	*A1		
R504	*A1		
R505	*A1		
R506	*B1		
R507	*B1		
R508	*B1		
R509	*B1		

CUE-13 (1-679-889-12)

C100	D1	D100	*C2	R136	*C1	R238	*A2
C101	D1	D102	D1	R137	*C1	R239	*B1
C102	*D1	D103	C2	R138	*C1	R240	*C1
C103	*D1	D107	*B1	R139	C1	R241	*D1
C104	*B1	D108	*B2	R140	C1	R242	*D1
C105	*D1	D109	*A2	R141	*C1	R243	*C1
C106	*B2	D112	*A2	R142	C1	R244	C1
C107	*D1	D113	A2	R143	*C1	R245	*C1
C109	*D1	D114	A2	R144	*B1	R246	*B2
C110	*C1	D115	*C1	R145	*C1	R247	B1
C111	*C1	D300	*D2	R146	*C1	R248	B1
C112	C1	D301	*D2	R147	*C1	R249	B1
C113	*C1			R148	*C1	R251	*B1
C114	C1	E100	C1	R149	C1	R252	B2
C115	C1	E101	*B1	R151	C1	R253	B2
C116	C1	E102	*B2	R152	C1	R254	*A2
C117	C1	E103	C2	R153	C1	R255	*A2
C118	C1			R154	*C1	R256	*D2
C119	*C1	IC100	*D2	R155	*C1	R257	*D2
C120	C1	IC101	B1	R156	*C1	R258	*D1
C121	C1	IC102	D1	R157	*C1	R259	*C1
C122	C1	IC103	C1	R158	B1	R260	C1
C123	*C1	IC104	*C1	R161	*C2	R261	C1
C124	C1	IC105	C1	R163	*C1	R262	C2
C125	C2	IC106	C1	R164	*C1	R263	*A2
C126	*C1	IC107	B1	R165	*C1	R264	*A2
C127	C1	IC108	C1	R167	*B1	R265	*A2
C128	*C2	IC109	B1	R168	*C1	R266	*A2
C130	*C1	IC110	B1	R169	*B1	R267	*A2
C131	*B1	IC111	B2	R170	*B1	R300	*C2
C132	*B1	IC112	B2	R171	B1	R301	*C2
C133	B1	IC113	A1	R172	B1	R302	*C2
C134	C1	IC114	A1	R173	*C1	R303	B2
C135	*C1	IC115	A1	R175	*B1	R304	B2
C136	*B1	IC116	A1	R176	C1	R305	B2
C137	*B1	IC117	A1	R177	*C1	R306	B2
C139	B1	IC118	A1	R178	*B1	R307	B2
C140	*B1	IC119	C1	R179	*B1	R308	B2
C141	*B2	IC120	D2	R180	*B1		
C142	*B2	IC121	D2	R181	*B1	RV100	D1
C143	*B2	IC300	C2	R182	*B1	RV101	C1
C144	*A1	IC301	C2	R183	*B1	RV102	D1
C145	B1	IC303	C2	R184	*B1	RV103	C1
C146	B1	IC304	C2	R185	*B1	RV104	B1
C147	*A1			R186	*B1	RV105	A2
C148	*A1	L300	D2	R187	*B1	RV106	A2
C149	*A1			R190	*B1	RV107	C1
C150	A1	PS300	D2	R192	*B2	RV108	A2
C151	A1	PS301	D2	R193	*B2		
C152	*A2	PS302	D2	R194	*B2	RY100	D1
C153	B2			R195	B2	RY101	A2
C154	A2	Q100	*C2	R196	*B2		
C155	A2	Q102	B1	R197	*A2	S100	C1
C156	*B1	Q104	B1	R198	*B1	S101	B2
C158	*C1	Q105	B1	R199	B2		
C159	C1	Q106	B1	R200	*A2	THP100	B1
C160	B1	Q107	B1	R201	*A2	THP101	C1
C161	B1	Q108	*A2	R202	*A2	THP300	B2
C162	B1	Q109	B1	R203	B2		
C163	*B1	Q110	B2	R204	*B2	TP100	C1
C164	B2			R205	*B2	TP101	D1
C165	B2	R100	*B2	R206	*B2	TP102	B2
C166	A1	R101	*D1	R207	*B2	TP103	A2
C167	B1	R102	*D1	R208	*B2	TP104	A2
C168	*A1	R103	*D1	R209	*B2	TP105	A2
C169	*A1	R104	*C2	R210	*A2	TP300	C2
C170	*A2	R105	*D1	R211	*B1	TP301	C2
C171	*A2	R106	*D1	R212	*B1		
C172	B1	R107	*B1	R213	*A1	*:B SIDE	
C173	*D1	R108	*D1	R214	*A1		
C174	*B1	R111	*C1	R215	*B1		
C175	*C1	R112	*C1	R216	*B1		
C176	B2	R113	*C1	R217	*B1		
C177	*D2	R114	*C1	R218	*B1		
C178	C1	R115	*C1	R219	*A1		
C300	*C2	R116	*C1	R220	*B1		
C301	*C2	R117	B1	R221	*A1		
C302	*D2	R118	B1	R222	*B1		
C303	D2	R119	*D1	R223	*A1		
C304	*D2	R120	*D1	R224	*A1		
C305	*C2	R121	*D1	R225	*A1		
C307	*D2	R122	*D1	R226	*A1		
C309	D2	R123	*B1	R227	*A1		
C310	D2	R124	*D1	R228	*A1		
C311	D2	R125	*B1	R229	*A1		
C312	D2	R126	*B1	R230	*A1		
C313	*C2	R127	*C1	R231	*C1		
C314	*B2	R128	*C1	R232	*A1		
C315	B2	R129	*D1	R233	*A1		
		R132	*D1	R234	*A1		
CN100	D1	R133	*C1	R236	*A1		
		R134	*B1	R237	*A2		

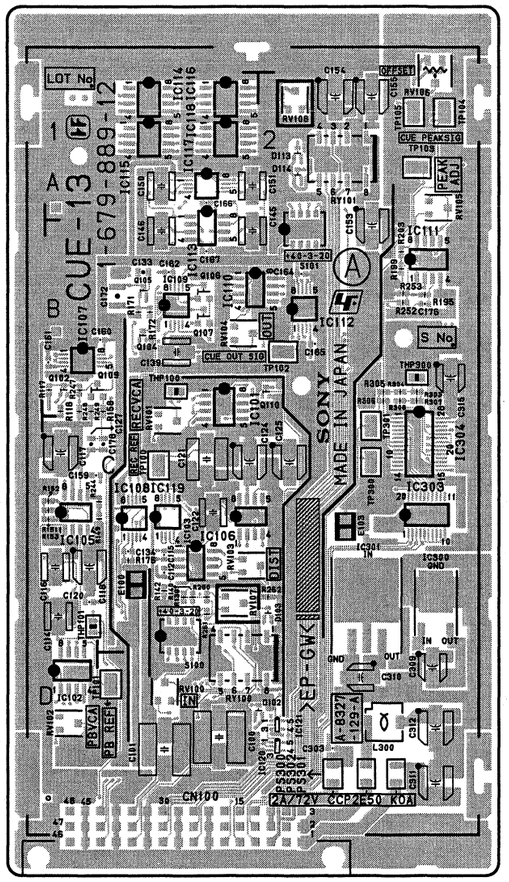

CUE-13 -A SIDE-
SUFFIX: -12

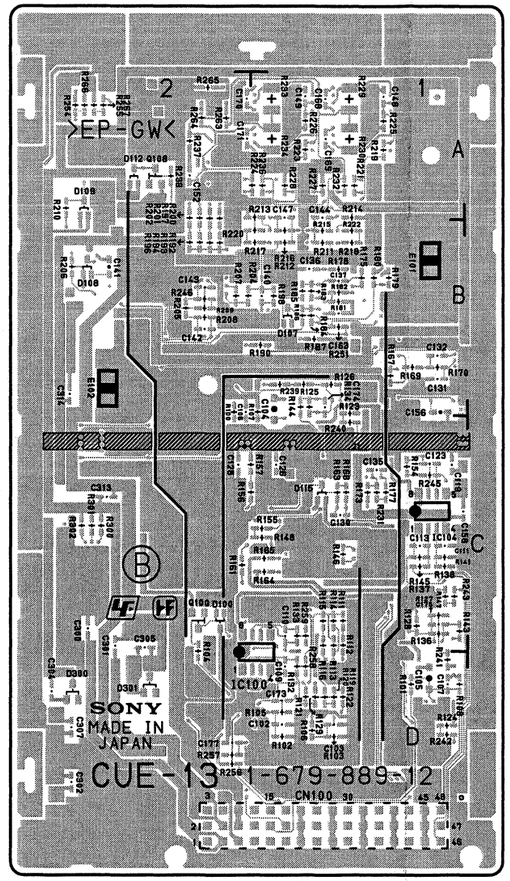

CUE-13 -B SIDE-
SUFFIX: -12

CP-371 (1-682-695-11)

C1	A4	C750	B5
C2	A4	C751	B6
C3	A4	C752	B6
C4	*A4	C753	A6
C5	A5	C754	A6
C6	A4	C755	A6
C7	*A5	C756	*D1
C8	A4	C757	A6
C9	A5	C758	A5
C10	A5	C759	*A6
C11	A4	C760	*A5
C12	*A4	C761	*A6
C100	D3	C762	*A5
C101	C3	C763	A6
C102	*A3	C764	A5
C104	A3		
C106	*A3	CL100	*D3
C107	D6	CL101	*A2
C201	C3	CL200	*D3
C202	*B3	CL201	*B2
C203	A3	CL300	*D3
C204	B3	CL301	*C2
C205	A3	CL400	*D3
C206	*B3	CL401	*C2
C207	D6	CL500	*A1
C301	C3	CL501	*A1
C302	*C3	CL502	*A2
C304	C3	CL503	*B1
C306	*C3	CL504	*B1
C307	D6	CL505	*B2
C401	C3	CL600	*C1
C402	*C3	CL601	*C1
C403	C3	CL602	*C2
C404	C3	CL603	*D1
C405	C3	CL604	*C1
C406	*C3	CL605	*C2
C407	D6	CL710	*B5
C500	*A1		
C501	*A1	CN1	A2
C502	*B1	CN10	B3
C503	*B1	CN11	A4
C504	*A1	CN12	A5
C505	*B1	CN13	A6
C600	*C1	CN14	C4
C601	*C1	CN15	C5
C602	*D1	CN16	C6
C603	*D1	CN42	*A6
C604	*C1	CN710	D1
C605	*C1		
C701	D5	D1	*A4
C702	*D5	D500	*B1
C703	C5	D501	*A1
C704	C5	D600	*C1
C705	C5	D601	*C1
C706	*D4	D701	D5
C707	C5	D702	D5
C708	D5	D703	D5
C709	C5	D704	D5
C710	*C5	D705	C5
C711	C5	D706	C5
C712	C5	D707	C5
C713	C5	D708	*A6
C714	*C5		
C715	C5	E1	*B2
C716	D5	E2	*B1
C717	D5		
C718	D5	F1	D3
C719	D5		
C720	C5	FB1	*D4
C721	C5	FB2	*D4
C722	C5		
C724	B6	FL1	*A4
C725	*A6	FL2	*A4
C726	C4	FL3	*A4
C727	D4	FL4	*A4
C730	B5	FL5	*A4
C731	C5	FL6	*B5
C732	A5	FL7	*A5
C733	C4	FL8	*A5
C734	C4	FL9	*A5
C735	C4	FL10	*A5
C736	C4	FL11	*A5
C737	C4	FL12	*A5
C738	C4	FL13	*A5
C739	D4	FL14	*A5
C740	D4	FL15	*A6
C741	D4	FL16	*A6
C742	D4	FL17	*A6
C746	*A6	FL18	*C5
C747	*A6	FL19	*C5
C748	A6	FL20	*C5
C749	*A6	FL21	*C5

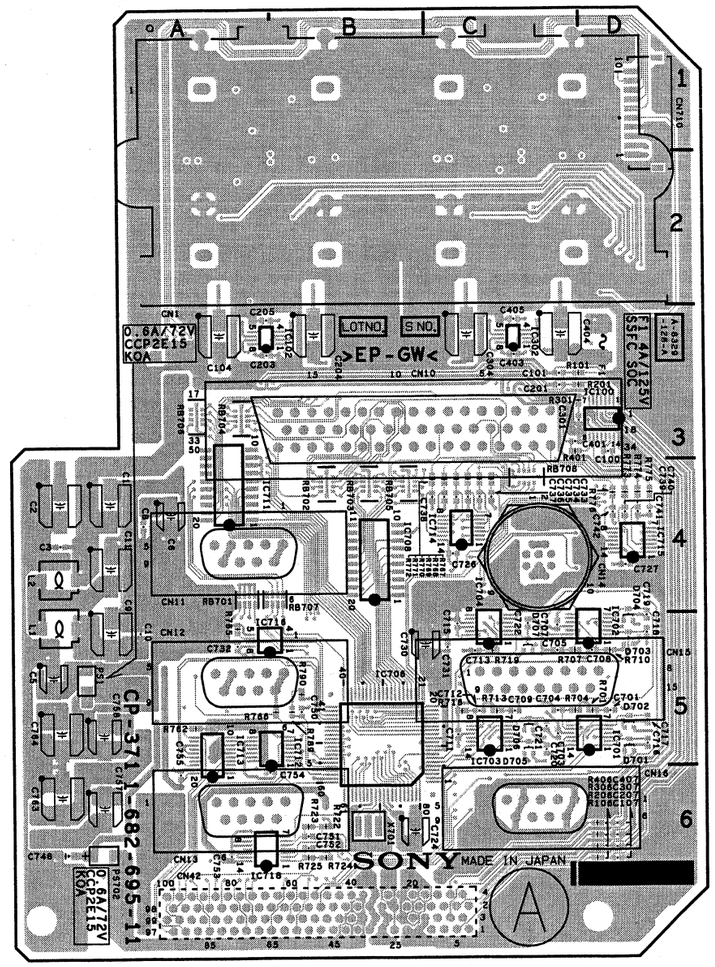

CP-371 -A SIDE-
SUFFIX: -11

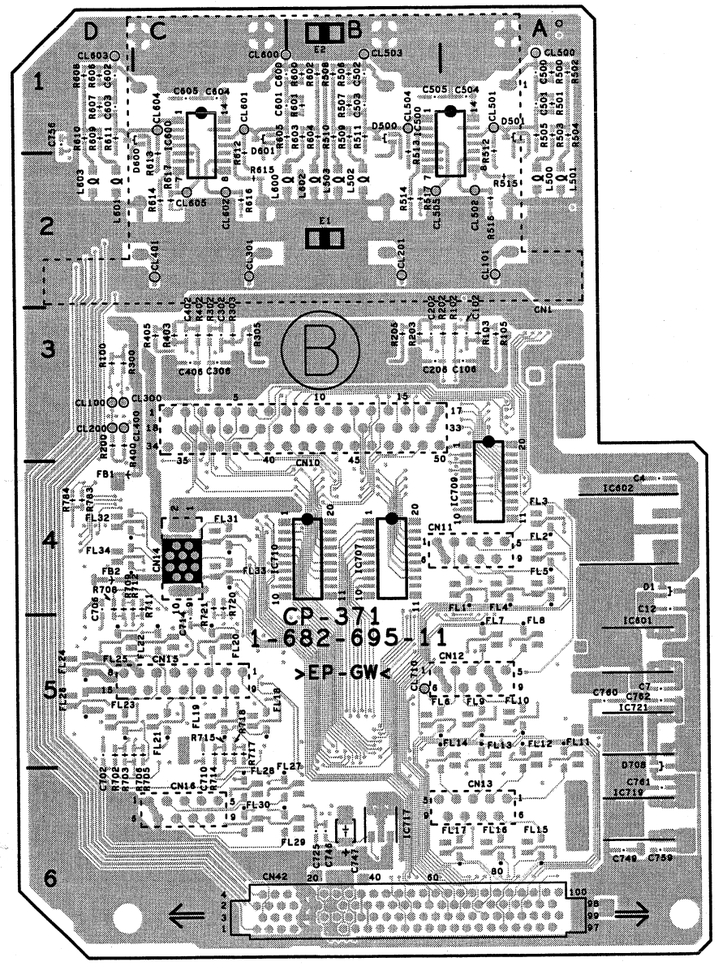

CP-371 -B SIDE-
SUFFIX: -11

FL22	*C5	R513	*B2
FL23	*D5	R514	*B2
FL24	*D5	R515	*A2
FL25	*D5	R516	*A2
FL26	*D5	R517	*B2
FL27	*C6	R600	*B1
FL28	*C6	R601	*B1
FL29	*C6	R602	*B1
FL30	*C6	R603	*B1
FL31	*C4	R604	*B1
FL32	*D4	R605	*C1
FL33	*C4	R606	*D1
FL34	*D4	R607	*D1
		R608	*D1
IC100	D3	R609	*D1
IC102	A3	R610	*D1
IC302	C3	R611	*D1
IC500	*A1	R612	*C2
IC600	*C1	R613	*C2
IC601	*A5	R614	*C2
IC602	*A4	R615	*C2
IC701	D5	R616	*C2
IC702	D5	R617	*C2
IC703	C5	R701	D5
IC704	C5	R702	*D5
IC706	B5	R703	*D5
IC707	*B4	R704	C5
IC708	B4	R705	*C5
IC709	*A4	R706	*D5
IC710	*B4	R707	C5
IC711	A4	R708	*D4
IC712	A5	R709	*D4
IC713	A5	R710	D5
IC714	C4	R711	*C4
IC715	D4	R712	*D4
IC716	A5	R713	C5
IC717	*A6	R714	*C5
IC718	A6	R715	*C5
IC719	*A6	R716	C5
IC721	*A5	R717	*C5
		R718	*C5
L1	A5	R719	C5
L2	A4	R720	*C4
L500	*A2	R721	*C4
L501	*A2	R722	B6
L502	*B2	R723	B6
L503	*B2	R724	B6
L600	*C2	R725	B6
L601	*D2	R762	A5
L602	*B2	R765	A5
L603	*D2	R766	A5
		R767	C4
PS1	A5	R768	C4
PS702	A6	R769	C4
		R770	C4
R100	*D3	R771	C4
R101	C3	R772	C4
R102	*A3	R773	D4
R103	*A3	R774	D4
R105	*A3	R775	D4
R106	D6	R776	D4
R200	*D3	R783	*D4
R201	C3	R784	*D4
R202	*A3	R789	B5
R203	*B3	R790	B5
R205	*B3		
R206	D6	RB701	A4
R300	*D3	RB702	B4
R301	C3	RB703	B4
R302	*C3	RB704	A3
R303	*C3	RB705	B4
R305	*C3	RB706	A3
R306	D6	RB707	A4
R400	*D3	RB708	C4
R401	C3		
R402	*C3	X701	B6
R403	*C3		
R405	*C3	*:B SIDE	
R406	D6		
R500	*A1		
R501	*A1		
R502	*A1		
R503	*A1		
R504	*A1		
R505	*A1		
R506	*B1		
R507	*B1		
R508	*B1		
R509	*B1		
R510	*B1		
R511	*B1		
R512	*A2		

CUE-13 (1-679-889-11)

C100	D2	D102	*D2	R138	*C1	R240	*C1
C101	D1	D103	*D1	R139	*D1	R241	*D1
C102	*D2	D107	*B1	R140	*C1	R242	*D1
C103	*D1	D108	*B2	R141	*C1	R243	*C1
C104	*B1	D109	*A2	R142	C1	R244	C1
C105	*D1	D112	*A2	R143	*C1	R245	*C1
C106	*B2	D113	*A2	R144	*B1	R246	*B2
C107	*D1	D114	*A2	R145	*C1	R247	B1
C109	*D1	D115	*C1	R146	*C1	R248	B1
C110	*C1	D300	*D2	R147	*C1	R249	B1
C111	*C1	D301	*D2	R148	*C1	R251	*B1
C112	C1			R149	C1	R252	B2
C113	*C1	E100	C1	R151	C1	R253	B2
C114	C1	E101	*B1	R152	C1	R254	*A2
C115	C1	E102	*B2	R153	C1	R255	*A2
C116	C1	E103	C2	R154	*C1	R300	*C2
C117	C1			R155	*C1	R301	*C2
C118	C1	F300	D2	R156	*C2	R302	*C2
C119	*C1	F301	D2	R157	*C2	R303	B2
C120	C1	F302	D2	R158	B1	R304	B2
C121	C1			R161	*C2	R305	B2
C122	C1	IC100	*D2	R163	*C1	R306	B2
C123	*C1	IC101	B1	R164	*C1	R307	B2
C124	C1	IC102	D1	R165	*C1	R308	B2
C125	C2	IC103	C1	R167	*B1		
C126	*C1	IC104	*C1	R168	*C1	RV100	D1
C127	C1	IC105	C1	R169	*B1	RV101	C1
C128	*C1	IC106	C1	R170	*B1	RV102	D1
C130	*C1	IC107	B1	R171	B1	RV103	C1
C131	*B1	IC108	C1	R172	B1	RV104	B1
C132	*B1	IC109	B1	R173	*C1	RV105	A2
C133	B1	IC110	B1	R175	C1	RV106	A2
C134	C1	IC111	B2	R176	C1		
C135	C1	IC112	B2	R177	*C1	RY100	C1
C136	*B1	IC113	A1	R178	*B1	RY101	A2
C137	*B1	IC114	A1	R179	*B1		
C139	B1	IC115	A1	R180	*B1	S100	C1
C140	*B1	IC116	A1	R181	*B1	S101	B2
C141	*B2	IC117	A1	R182	*B1		
C142	*B2	IC118	A1	R183	*B1	THP100	B1
C143	*B2	IC119	C1	R184	*B1	THP101	C1
C144	*A1	IC300	C2	R185	*B1	THP300	B2
C145	B1	IC301	C2	R186	*B1		
C146	B1	IC303	C2	R187	*B1	TP100	C1
C147	*A1	IC304	C2	R190	*B1	TP101	D1
C148	*A1			R192	*B2	TP102	B2
C149	*A1	L300	D2	R193	*B2	TP103	A2
C150	A1			R194	*B2	TP104	A2
C151	A1	Q100	C1	R195	B2	TP105	A2
C152	*A2	Q102	B1	R196	*B2	TP300	C2
C153	A2	Q104	B1	R197	*A2	TP301	C2
C154	A2	Q105	*B1	R198	*B1		
C155	A2	Q106	B1	R199	B2	*:B SIDE	
C156	*B1	Q107	B1	R200	*A2		
C158	*C1	Q108	*A2	R201	*A2		
C159	C1	Q109	B1	R202	*A2		
C160	B1			R203	B2		
C161	B1	R100	*B2	R204	*B2		
C162	B1	R101	*D1	R205	*B2		
C163	*B1	R102	*D2	R206	*B2		
C164	B2	R103	*D1	R207	*B2		
C165	B2	R104	C1	R208	*B2		
C166	A1	R105	*D2	R209	*B2		
C167	B1	R106	*D1	R210	*A2		
C168	*A1	R107	*B1	R211	*B1		
C169	*A1	R108	*D1	R212	*B1		
C170	*A2	R111	*C1	R213	*A1		
C171	*A2	R112	*C1	R214	*A1		
C172	B1	R113	*C1	R215	*B1		
C173	*D1	R114	*C1	R216	*B1		
C174	*B1	R115	*C1	R217	*B1		
C175	*C1	R116	*C1	R218	*B1		
C176	B2	R117	B1	R219	*A1		
C300	*C2	R118	B1	R220	*B1		
C301	*C2	R119	*D1	R221	*A1		
C302	*D2	R120	*D1	R222	*B1		
C303	D2	R121	*D1	R223	*A1		
C304	*D2	R122	*D1	R224	*A1		
C305	*C2	R123	*B1	R225	*A1		
C307	*D2	R124	*D1	R226	*A1		
C309	D2	R125	*B1	R227	*A1		
C310	D2	R126	*B1	R228	*A1		
C311	D2	R127	*C1	R229	*A1		
C312	D2	R128	*C1	R230	*A1		
C313	*C2	R129	*D1	R231	*C1		
C314	*B2	R130	*B1	R232	*A1		
C315	B2	R131	*D1	R233	*A1		
		R132	*D1	R234	*A1		
CN100	D1	R133	*C1	R236	*A1		
CN101	D1	R134	*B1	R237	*A2		
		R136	*C1	R238	*A2		
D100	C2	R137	*C1	R239	*B1		

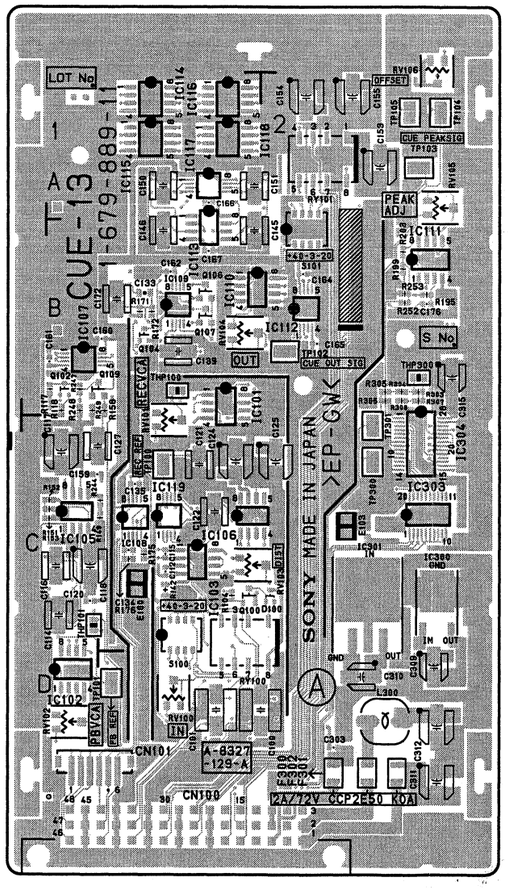

CUE-13 -A SIDE-
SUFFIX: -11

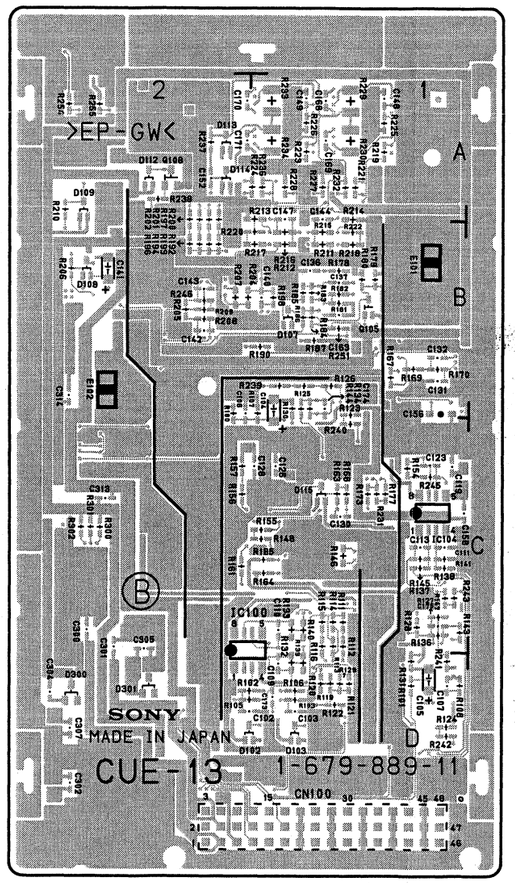

CUE-13 -B SIDE-
SUFFIX: -11

DIF-134
SUFFIX: -13

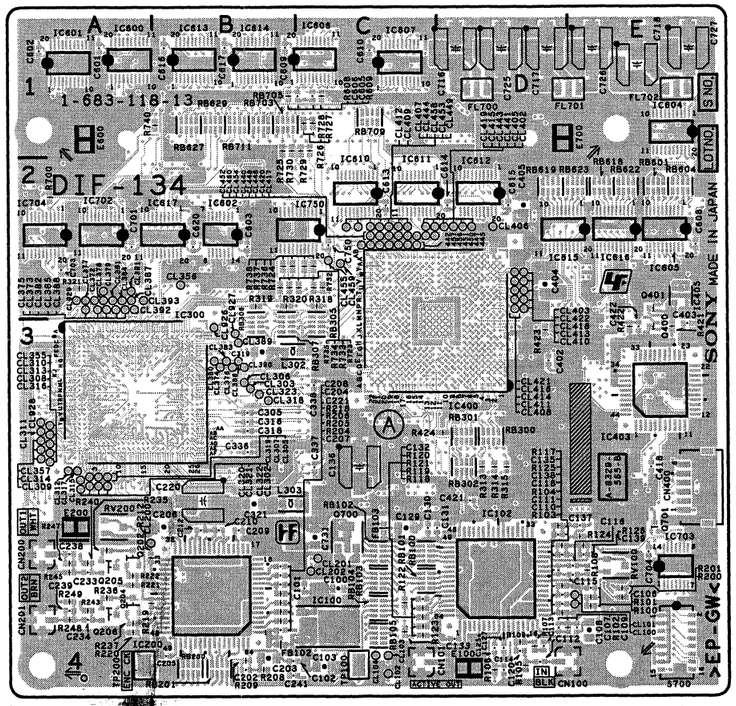

DIF-134 -A SIDE-
SUFFIX: -13
For HKDW-102

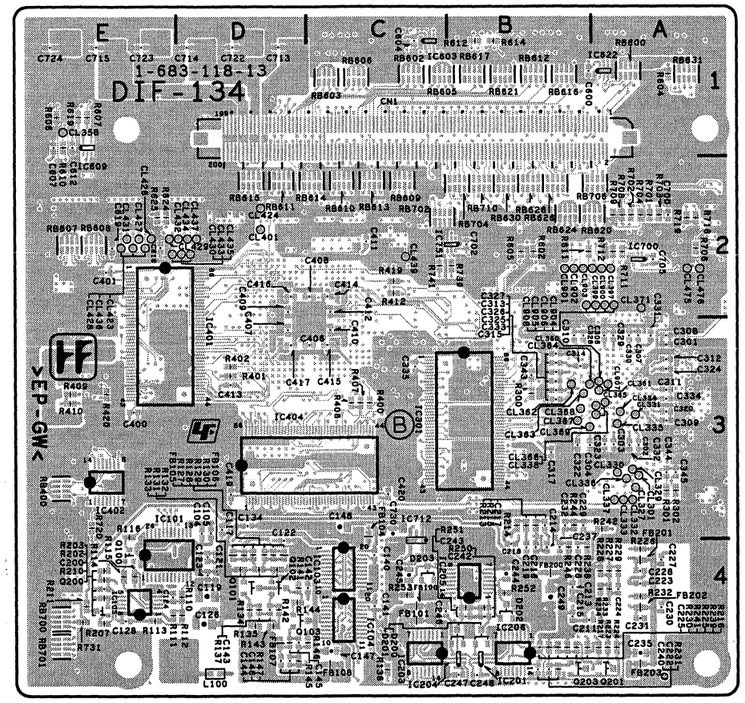

DIF-134 -B SIDE-
SUFFIX: -13
For HKDW-102

DIF-134 (1-683-118-13)

C100	C4	C138	D4	C228	*A4	C318	B3	C414	*C2	C716	D1	CL319	A3	CL379	A2	CL423	*E2	CL900	*A2	FB107	*D4	IC607	C1			R137	*D4	R230	*B4	R408	*C3	R724	C2	RB604	E2	RV200	A3
C101	C4	C139	E4	C229	*B3	C319	B3	C415	*C3	C717	D1	CL320	A3	CL380	B3	CL424	*D2	CL901	*B2	FB108	*C4	IC609	*E1	R100	E4	R141	*D4	R231	*B4	R409	*E3	R725	B1	RB605	*C1		
C102	B4	C140	*C4	C230	*A4	C320	*A3	C416	*D2	C718	E1	CL321	A3	CL381	A2	CL426	*E2	CL902	*B2	FB200	*B4	IC610	C2	R101	E4	R142	*D4	R232	*A4	R410	*E3	R726	C1	RB606	*C1	S700	E4
C103	C4	C141	*C4	C231	*A4	C321	B3	C417	*D3	C722	*D1	CL322	A3	CL382	A2	CL427	*E2	CL903	*B2	FB201	*A4	IC611	C2	R102	D4	R143	*D4	R233	*A4	R412	*C2	R727	C1	RB607	*E2		
C104	*D3	C142	*C4	C232	*B3	C322	*B3	C418	E3	C723	*E1	CL323	B3	CL383	B3	CL428	*E2	CL904	*A2	FB202	*A4	IC612	D2	R103	D4	R144	*D4	R234	*A4	R419	*C2	R728	C1	RB608	*E2	TP100	C4
C105	*D3	C143	*D4	C233	A4	C323	*A3	C419	*D3	C724	*E1	CL327	*A3	CL384	A2	CL429	*E2	CL905	*A2	FB203	*A4	IC613	B1	R104	D4	R145	*D4	R235	A4	R420	*E3	R729	C1	RB609	*C2	TP200	A4
C106	B4	C144	*D4	C234	A4	C324	*A3	C420	*C3	C725	D1	CL329	*A3	CL385	A2	CL430	*E2	CL906	*A2			IC614	B1	R105	D4	R146	*C4	R236	A4	R421	E3	R730	B1	RB610	*C2		
C107	D4	C145	*D4	C235	*A4	C325	*B3	C421	D3	C726	E1	CL330	*A3	CL386	B3	CL431	*E2	CL907	*A3	FL700	D1	IC615	E2	R106	D4	R147	*D4	R237	A4	R422	E3	R731	*E4	RB611	*D2	*:B SIDE	
C108	B4	C146	*D4	C237	*B4	C326	*B3	C422	E3	C727	E1	CL331	*A3	CL387	A2	CL432	*D2	CL908	*B2	FL701	E1	IC616	E2	R107	D4	R200	E4	R238	*B4	R423	D3	R732	C2	RB612	*B1		
C109	E4	C147	*C4	C238	A4	C327	*B3	C600	*B1	C730	*C3	CL332	*A3	CL388	A2	CL433	*D2	CL926	B3	FL702	E1	IC617	B2	R108	E4	R201	E4	R239	*B4	R424	D3	R733	C2	RB613	*C2		
C110	D4	C148	*C3	C239	A4	C328	*B3	C601	A1	C731	C3	CL333	*A3	CL389	B3	CL434	*D2	CL927	B3			IC622	*A1	R109	D4	R202	*E4	R240	A4	R602	*B2	R734	B2	RB614	*C2		
C111	D4	C200	*E4	C240	*B4	C329	*A3	C602	A1	C750	C2	CL334	*A3	CL390	B3	CL435	*D2	CL928	A3	IC100	C4	IC700	*A2	R110	*D4	R203	*E4	R241	*B4	R604	*A1	R735	B2	RB615	*D2		
C112	D4	C202	B4	C241	B4	C330	*A3	C603	B2			CL335	*A3	CL391	A2	CL436	*E2	CL929	A2	IC101	*E4	IC702	A2	R111	*E4	R204	B4	R242	*A3	R605	*B2	R736	C2	RB616	*B1		
C113	D4	C203	B4	C242	*B4	C331	*A3	C604	*C1	CL100	E4	CL336	*A3	CL392	A2	CL437	*D2			IC102	D4	IC703	E4	R112	*D4	R205	B4	R243	A4	R606	*E1	R737	B2	RB617	*B1		
C114	D4	C204	B4	C243	*B4	C332	*A3	C605	C1	CL101	E4	CL337	*A3	CL393	A2	CL439	*C2	CN1	*C1	IC103	*C4	IC704	A2	R113	*E4	R206	B4	R244	*B3	R607	*E1	R738	B2	RB618	E2		
C115	E4	C205	B4	C244	*B4	C333	*B3	C606	C1	CL102	C4	CL338	*A3	CL397	*A2	CL440	C2	CN100	D4	IC104	*C4	IC712	*C4	R114	*E4	R207	*E4	R245	A4	R608	B1	R739	*B2	RB619	D2		
C116	E4	C206	B3	C245	*C4	C334	*A3	C607	*E1	CL103	C4	CL355	A3	CL399	*A2	CL441	D2	CN101	C4	IC105	*E4	IC750	C2	R115	*E4	R208	B4	R246	*B4	R609	C1	R740	B1	RB620	*A2		
C117	*D3	C207	B4	C246	*C4	C335	*C3	C608	E2	CL104	C4	CL356	B2	CL401	*D2	CL442	C2	CN200	A4	IC200	B4	IC751	*B2	R116	*E3	R209	B4	R247	A4	R610	*E1	R741	*C2	RB621	*B1		
C118	D4	C208	B4	C247	*B4	C336	B3	C609	B1	CL200	A4	CL357	A3	CL402	D2	CL443	D2	CN201	A4	IC201	*B4			R117	D3	R210	*E4	R248	A4	R611	*B2			RB622	E2		
C119	*D4	C209	B3	C248	*B4	C337	C3	C610	C1	CL201	C4	CL358	*E1	CL403	D2	CL444	C2	CN400	E3	IC203	*C4	L100	*D4	R118	C4	R211	*E4	R249	A4	R612	*B1	RB100	C4	RB623	E2		
C120	D4	C210	B3	C249	*B4	C338	C3	C612	*E1	CL202	C4	CL360	*A3	CL405	D2	CL445	C2			IC204	*B4	L302	B3	R119	C4	R212	A4	R250	*B4	R614	*B1	RB101	C4	RB624	*B2		
C121	*D4	C211	*B4	C301	*A3	C343	*B3	C613	C2	CL301	*A3	CL361	*A3	CL406	D2	CL446	C2	D200	*B4	IC205	*B4	L303	B3	R120	C4	R213	*B3	R251	*B4	R619	*E1	RB102	C4	RB626	*B2		
C122	*D4	C212	B3	C302	*A3	C344	*A3	C614	D2	CL302	A3	CL362	*B3	CL407	C2	CL447	C2	D201	*B4	IC206	*B4			R121	C4	R214	*B3	R252	*B4	R624	*E2	RB103	C4	RB627	B1		
C123	*D4	C213	*B4	C303	*A3	C345	*A3	C615	D2	CL303	B3	CL363	*B3	CL408	D2	CL448	C2	D202	*B4	IC300	A3	Q100	*E4	R122	C4	R215	*B3	R253	*C4	R625	*E2	RB104	C4	RB628	*B2		
C124	*E4	C214	*B4	C304	*B3	C400	*E3	C616	B1	CL305	A3	CL364	*B3	CL409	C2	CL449	C2	D203	*C4	IC301	*C3	Q101	*D4	R123	C4	R216	*B4	R300	*B3	R700	A2	RB105	C4	RB629	B1		
C125	D4	C215	*B4	C305	B3	C401	*E2	C617	B1	CL306	B3	CL365	*A3	CL410	D2	CL450	C2			IC400	C3	Q102	*D4	R124	E3	R217	*A4	R301	*A3	R701	*A2	RB200	B4	RB630	*B2		
C126	*D4	C216	*B4	C306	*A3	C402	D3	C618	*E2	CL307	A3	CL366	*A3	CL411	D2	CL451	C2	E100	D4	IC401	*E2	Q103	*D4	R125	D4	R218	B4	R302	*A3	R702	*A2	RB201	B4	RB631	*A1		
C127	D4	C217	*B3	C307	*A3	C403	E3	C619	*E2	CL308	A3	CL367	*B3	CL412	C2	CL452	C2	E200	A3	IC402	*E3	Q200	*E4	R126	E4	R219	A4	R313	D3	R703	*A2	RB300	D3	RB700	*E4		
C128	*E4	C218	*B4	C308	*A3	C404	D2	C620	B2	CL309	A3	CL368	*B3	CL413	D2	CL453	C2	E600	A1	IC403	E3	Q201	*A4	R127	*D4	R220	A4	R314	D3	R704	*A2	RB301	D3	RB701	*E4		
C129	C3	C219	*B4	C309	*A3	C405	D2	C700	*A2	CL310	A3	CL369	*B3	CL414	D2	CL454	C2	E700	D1	IC404	*D3	Q202	A4	R128	*D4	R221	A4	R315	D3	R706	*A2	RB302	D3	RB702	*C2		
C130	C3	C220	B3	C310	*B3	C406	*C3	C701	A2	CL311	A3	CL371	*A2	CL415	C2	CL455	C2			IC405	E2	Q203	*B4	R129	*D4	R222	A4	R318	C2	R708	*A2	RB305	C3	RB703	B1		
C131	C3	C221	B4	C311	*A3	C407	*D3	C702	*B2	CL312	A3	CL372	A2	CL416	D2	CL456	C2	FB100	*C4	IC600	A1	Q204	A4	R130	*D4	R223	*A4	R319	B2	R709	*A2	RB306	B3	RB704	*B2		
C132	C4	C222	*B4	C312	*A3	C408	*C2	C703	A2	CL313	A3	CL373	A2	CL417	C2	CL457	C2	FB101	*C4	IC601	A1	Q205	A4	R131	*D4	R224	*A4	R320	B2	R711	*A2	RB307	B3	RB705	B1		
C133	D4	C223	*A4	C313	*B3	C409	*D2	C704	E4	CL314	A3	CL374	B3	CL418	D2	CL458	C2	FB102	B4	IC602	B2	Q206	A4	R132	*D4	R225	*B4	R321	A2	R712	*A2	RB400	*E3	RB706	*A2		
C134	*D3	C224	*A4	C314	*B3	C410	*C3	C705	*A2	CL315	A3	CL375	A2	CL419	C2	CL459	C2	FB103	C3	IC603	*C1	Q400	E3	R133	*D4	R226	*A4	R400	*C3	R718	*A2	RB600	*A1	RB709	C1		
C135	D3	C225	*B4	C315	*B3	C411	*C2	C713	*D1	CL316	A3	CL376	B3	CL420	C2	CL460	C2	FB104	*C3	IC604	E1	Q401	E2	R134	*D4	R227	*A4	R401	*D3	R719	*A2	RB601	E2	RB710	*B2		
C136	C3	C226	*B4	C316	B3	C412	*C2	C714	*D1	CL317	A3	CL377	A2	CL421	D2	CL475	*A2	FB105	*D4	IC605	E2	Q700	C3	R135	*D4	R228	*A4	R402	*D3	R720	*E3	RB602	*C1	RB711	B1		
C137	E3	C227	*A4	C317	*B3	C413	*D3	C715	*E1	CL318	B3	CL378	A2	CL422	D2	CL476	*A2	FB106	*D4	IC606	C1	Q701	E3	R136	*C4	R229	*A4	R407	*C3	R723	C2	RB603	*C1				
																																		RV100	E4		

4-16 (b)

DIO-65 (1-680-942-14,15)

C101	A2	IC105	A1
C102	A2	IC106	A1
C103	A2		
C104	A2	L101	A2
C105	A2	L102	A2
C106	A2	L103	A3
C107	A3	L104	A2
C108	A3	L105	A3
C109	A2	L106	A2
C110	A2	L107	A2
C111	A2		
C112	A2	Q103	A3
C113	A2	Q104	A3
C114	A3	Q105	A3
C115	A2		
C116	A2	R102	A2
C117	A3	R103	A2
C118	A2	R104	A2
C119	A2	R107	A3
C120	A3	R108	A1
C121	A2	R109	A2
C122	A2	R110	A2
C123	A2	R111	A3
C124	A3	R112	A3
C125	A2	R113	A2
C126	A2	R114	A2
C127	A1	R115	A3
C128	A2	R116	A1
C129	B1	R117	A1
C130	B1	R118	A1
C131	A1	R119	A1
C132	A1	R120	A3
C133	A1	R121	A2
C134	A3	R122	A2
C135	A3	R123	A1
C136	A2	R124	A1
C137	A2	R125	A1
C138	A2	R126	A3
		R127	A1
CL101	A2	R128	A1
CL102	A2	R129	A1
CL105	A1	R130	A1
CL106	A1	R131	A2
CL107	A1	R132	B1
CL108	A1	R133	A2
CL109	A1	R134	A2
		R135	A3
CN1	A3	R136	A1
CN2	A3	R137	A2
CN3	B1		
CN4	B1	RB101	A1
CT101	A2	TP101	A1
		TP102	A1
D101	B1	TP103	A2
		TP104	A2
E101	A1	TP105	A1
		TP106	A2
FB1	B1		
FB2	B1	X101	A2
FB3	B1		
FB4	B1		
FB5	B1		
FB6	B1		
FB7	B1		
FB8	B1		
FB9	B1		
FB10	B1		
FB11	B1		
FB12	B1		
FB13	B1		
FB14	B1		
FB15	B1		
FB16	B1		
FB17	B1		
FB18	B1		
FB19	B1		
FB20	B1		
FB21	B1		
FB22	B1		
FB23	B1		
FB24	B1		
FB25	B1		
FB26	B1		
FB27	B1		
FB28	B1		
FB29	B1		
IC101	A3		
IC102	A2		
IC103	A2		
IC104	A1		

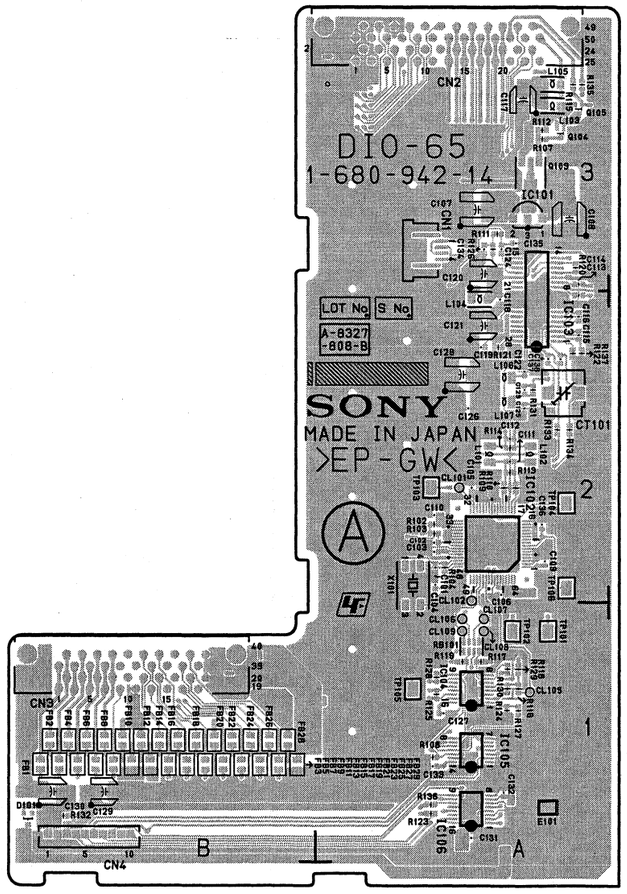

DIO-65 -A SIDE-
SUFFIX: -14, 15

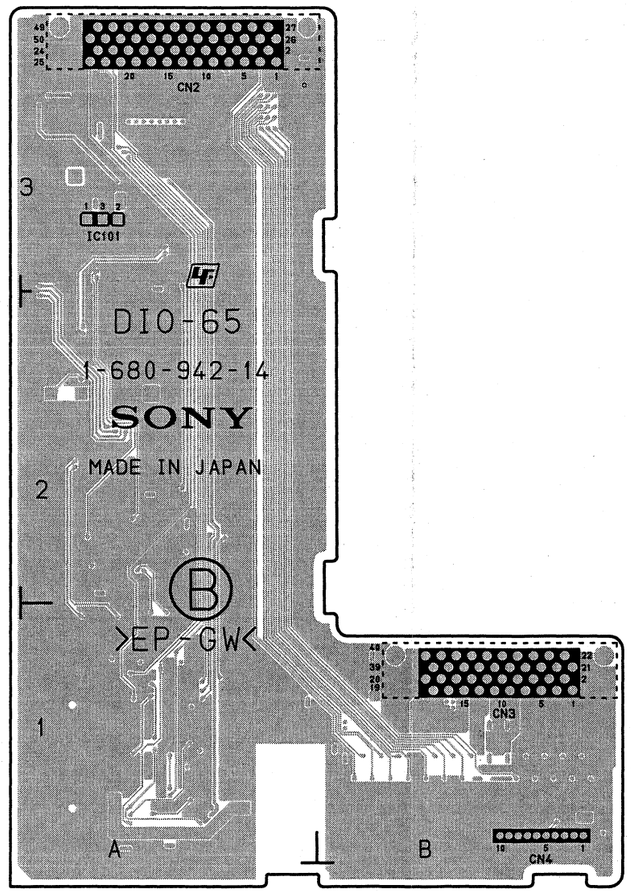

DIO-65 -B SIDE-
SUFFIX: -14, 15

DIF-134
SUFFIX: -12

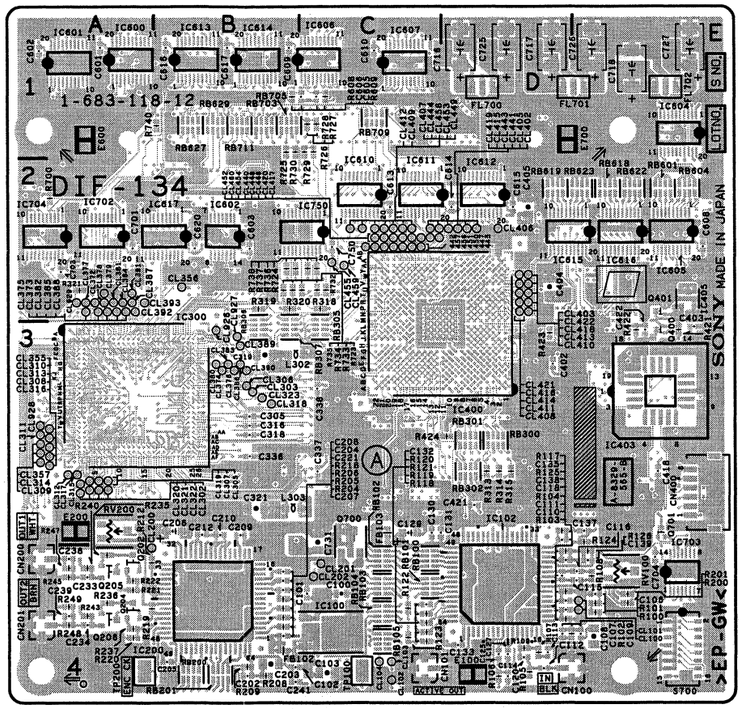

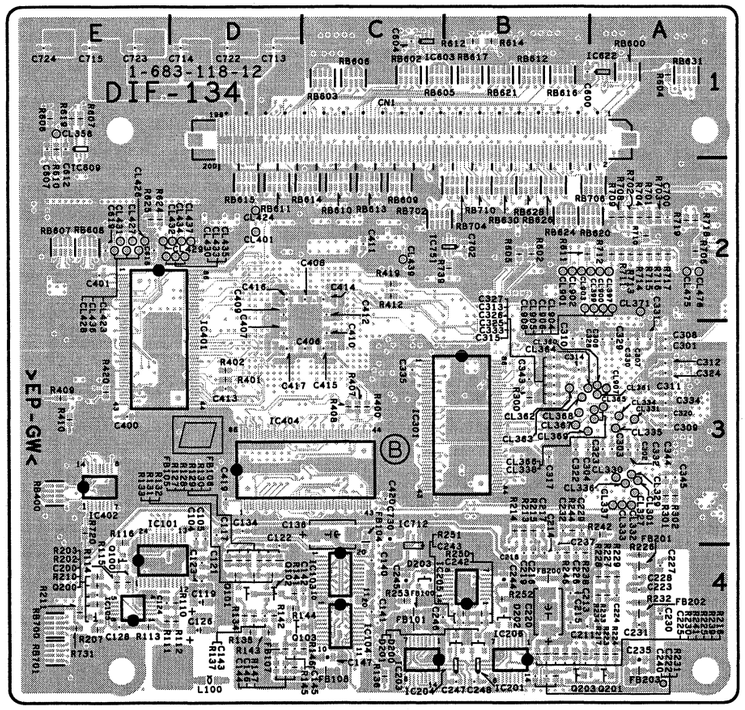

DIF-134 -A SIDE-

SUFFIX: -12

For HKDW-102

DIF-134 -B SIDE-

SUFFIX: -12

For HKDW-102

DIF-134 (1-683-118-12)

C100	C4	C138	D4	C229	*B3	C320	*A3	C416	*D2	C722	*D1	CL322	A3	CL382	A2	CL427	*E2	CL903	*B2	FB201	*A4	IC611	C2	R103	D4	R144	*D4	R234	*A4	R419	*C2	R720	*E3	RB603	*C1	RV100	E4
C101	C4	C139	E4	C230	*A4	C321	B3	C417	*D3	C723	*E1	CL323	B3	CL383	B3	CL428	*E2	CL904	*A2	FB202	*A4	IC612	D2	R104	D4	R145	*D4	R235	A4	R420	*E3	R723	C2	RB604	E2	RV200	A3
C102	B4	C140	*C4	C231	*A4	C322	*B3	C418	E3	C724	*E1	CL327	*A3	CL384	A2	CL429	*E2	CL905	*A2	FB203	*A4	IC613	B1	R105	D4	R146	*C4	R236	A4	R421	E3	R724	C2	RB605	*C1		
C103	C4	C141	*C4	C232	*B3	C323	*A3	C419	*D3	C725	D1	CL329	*A3	CL385	A2	CL430	*E2	CL906	*A2			IC614	B1	R106	D4	R147	*D4	R237	A4	R422	E3	R725	B1	RB606	*C1	S700	E4
C104	*D3	C142	*C4	C233	A4	C324	*A3	C420	*C3	C726	E1	CL330	*A3	CL386	B3	CL431	*E2	CL907	*A3	FL700	D1	IC615	E2	R107	D4	R200	E4	R238	*B4	R423	D3	R726	C1	RB607	*E2		
C105	*D3	C143	*D4	C234	A4	C325	*B3	C421	D3	C727	E1	CL331	*A3	CL387	A2	CL432	*D2	CL908	*B2	FL701	E1	IC616	E2	R108	E4	R201	E4	R239	*B4	R424	D3	R727	C1	RB608	*E2	TP100	C4
C106	E4	C144	*D4	C235	*A4	C326	*B3	C422	E3	C730	*C3	CL332	*A3	CL388	A2	CL433	*D2	CL926	B3	FL702	E1	IC617	B2	R109	D4	R202	*E4	R240	A4	R602	*B2	R728	C1	RB609	*C2	TP200	A4
C107	D4	C145	*D4	C237	*B4	C327	*B3	C600	*B1	C731	C3	CL333	*A3	CL389	B3	CL434	*D2	CL927	B3			IC622	*A1	R110	*D4	R203	*E4	R241	*B4	R604	*A1	R729	C1	RB610	*C2		
C108	E4	C146	*D4	C238	A4	C328	*B3	C601	A1	C750	C2	CL334	*A3	CL390	B3	CL435	*D2	CL928	A3	IC100	C4	IC702	A2	R111	*E4	R204	B4	R242	*A3	R605	*B2	R730	B1	RB611	*D2	*:B SIDE	
C109	E4	C147	*C4	C239	A4	C329	*A3	C602	A1			CL335	*A3	CL391	A2	CL436	*E2	CL929	A2	IC101	*E4	IC703	E4	R112	*D4	R205	B4	R243	A4	R606	*E1	R731	*E4	RB612	*B1		
C110	D4	C200	*E4	C240	*B4	C330	*A3	C603	B2	CL100	E4	CL336	*A3	CL392	A2	CL437	*D2			IC102	D4	IC704	A2	R113	*E4	R206	B4	R244	*B3	R607	*E1	R732	C2	RB613	*C2		
C111	D4	C202	B4	C241	B4	C331	*A3	C604	*C1	CL101	E4	CL337	*A3	CL393	A2	CL439	*C2	CN1	*C1	IC103	*C4	IC712	*C4	R114	*E4	R207	*E4	R245	A4	R608	B1	R733	C2	RB614	*C2		
C112	D4	C203	B4	C242	*B4	C332	*A3	C605	C1	CL102	C4	CL338	*A3	CL397	*A2	CL440	C2	CN100	D4	IC104	*C4	IC750	C2	R115	*E4	R208	B4	R246	*B4	R609	C1	R734	B2	RB615	*D2		
C113	D4	C204	B4	C243	*B4	C333	*B3	C606	C1	CL103	C4	CL355	A3	CL399	*A2	CL441	D2	CN101	C4	IC105	*E4	IC751	*B2	R116	*E3	R209	B4	R247	A4	R610	*E1	R735	B2	RB616	*B1		
C114	D4	C205	B4	C244	*B4	C334	*A3	C607	*E1	CL104	C4	CL356	B2	CL401	*D2	CL442	C2	CN200	A4	IC200	B4			R117	D3	R210	*E4	R248	A4	R611	*B2	R736	C2	RB617	*B1		
C115	E4	C206	B3	C245	*C4	C335	*C3	C608	E2	CL200	A4	CL357	A3	CL402	D2	CL443	D2	CN201	A4	IC201	*B4	L100	*D4	R118	C4	R211	*E4	R249	A4	R612	*B1	R737	B2	RB618	E2		
C116	E4	C207	B4	C246	*C4	C336	B3	C609	B1	CL201	C4	CL358	*E1	CL403	D2	CL444	C2	CN400	E3	IC203	*C4	L302	B3	R119	C4	R212	A4	R250	*B4	R614	*B1	R738	B2	RB619	D2		
C117	*D3	C208	B4	C247	*B4	C337	C3	C610	C1	CL202	C4	CL360	*A3	CL405	D2	CL445	C2			IC204	*B4	L303	B3	R120	C4	R213	*B3	R251	*B4	R619	*E1	R739	*B2	RB620	*A2		
C118	D4	C209	B3	C248	*B4	C338	C3	C612	*E1	CL301	*A3	CL361	*A3	CL406	D2	CL446	C2	D200	*B4	IC205	*B4			R121	C4	R214	*B3	R252	*B4	R624	*E2	R740	B1	RB621	*B1		
C119	*D4	C210	B3	C301	*A3	C343	*B3	C613	C2	CL302	A3	CL362	*B3	CL407	C2	CL447	C2	D201	*B4	IC206	*B4	Q100	*E4	R122	C4	R215	*B3	R253	*C4	R625	*E2			RB622	E2		
C120	D4	C211	*B4	C302	*A3	C344	*A3	C614	D2	CL303	B3	CL363	*B3	CL408	D2	CL448	C2	D202	*B4	IC300	A3	Q101	*D4	R123	C4	R216	*B4	R300	*B3	R700	A2	RB100	C4	RB623	E2		
C121	*D4	C212	B3	C303	*A3	C345	*A3	C615	D2	CL305	A3	CL364	*B3	CL409	C2	CL449	C2	D203	*C4	IC301	*C3	Q102	*D4	R124	E3	R217	*A4	R301	*A3	R701	*A2	RB101	C4	RB624	*B2		
C122	*D4	C213	*B4	C304	*B3	C400	*E3	C616	B1	CL306	B3	CL365	*A3	CL410	D2	CL450	C2			IC400	C3	Q103	*D4	R125	D4	R218	B4	R302	*A3	R702	*A2	RB102	C4	RB626	*B2		
C123	*D4	C214	*B4	C305	B3	C401	*E2	C617	B1	CL307	A3	CL366	*A3	CL411	D2	CL451	C2	E100	D4	IC401	*E2	Q200	*E4	R126	E4	R219	A4	R313	D3	R703	*A2	RB103	C4	RB627	B1		
C124	*E4	C215	*B4	C306	*A3	C402	D3	C618	*E2	CL308	A3	CL367	*B3	CL412	C2	CL452	C2	E200	A3	IC402	*E3	Q201	*A4	R127	*D4	R220	A4	R314	D3	R704	*A2	RB104	C4	RB628	*B2		
C125	D4	C216	*B4	C307	*A3	C403	E3	C619	*E2	CL309	A3	CL368	*B3	CL413	D2	CL453	C2	E600	A1	IC403	E3	Q202	A4	R128	*D4	R221	A4	R315	D3	R706	*A2	RB105	C4	RB629	B1		
C126	*D4	C217	*B3	C308	*A3	C404	D2	C620	B2	CL310	A3	CL369	*B3	CL414	D2	CL454	C2	E700	D1	IC404	*D3	Q203	*B4	R129	*D4	R222	A4	R318	C2	R708	*A2	RB200	B4	RB630	*B2		
C127	D4	C218	*B4	C309	*A3	C405	D2	C700	*A2	CL311	A3	CL371	*A2	CL415	C2	CL455	C2			IC405	E2	Q204	A4	R130	*D4	R223	*A4	R319	B2	R709	*A2	RB201	B4	RB631	*A1		
C128	*E4	C219	*B4	C310	*B3	C406	*C3	C701	A2	CL312	A3	CL372	A2	CL416	D2	CL456	C2	FB100	*C4	IC600	A1	Q205	A4	R131	*D4	R224	*A4	R320	B2	R710	*A2	RB300	D3	RB700	*E4		
C129	C3	C220	*B4	C311	*A3	C407	*D3	C702	*B2	CL313	A3	CL373	A2	CL417	C2	CL457	C2	FB101	*C4	IC601	A1	Q206	A4	R132	*D4	R225	*B4	R321	A2	R711	*A2	RB301	D3	RB701	*E4		
C130	C3	C221	B4	C312	*A3	C408	*C2	C703	A2	CL314	A3	CL374	B3	CL418	D2	CL458	C2	FB102	B4	IC602	B2	Q400	E3	R133	*D4	R226	*A4	R400	*C3	R712	*A2	RB302	D3	RB702	*C2		
C131	C3	C222	*B4	C313	*B3	C409	*D2	C704	E4	CL315	A3	CL375	A2	CL419	C2	CL459	C2	FB103	C3	IC603	*C1	Q401	E2	R134	*D4	R227	*A4	R401	*D3	R713	*A2	RB305	C3	RB703	B1		
C132	C4	C223	*A4	C314	*B3	C410	*C3	C713	*D1	CL316	A3	CL376	B3	CL420	C2	CL460	C2	FB104	*C3	IC604	E1	Q700	C3	R135	*D4	R228	*A4	R402	*D3	R714	*A2	RB306	B3	RB704	*B2		
C133	D4	C224	*A4	C315	*B3	C411	*C2	C714	*D1	CL317	A3	CL377	A2	CL421	D2	CL475	*A2	FB105	*D4	IC605	E2	Q701	E3	R136	*C4	R229	*A4	R407	*C3	R715	*A2	RB307	B3	RB705	B1		
C134	*D3	C225	*B4	C316	B3	C412	*C2	C715	*E1	CL318	B3	CL378	A2	CL422	D2	CL476	*A2	FB106	*D4	IC606	C1			R137	*D4	R230	*B4	R408	*C3	R716	*A2	RB400	*E3	RB706	*A2		
C135	D3	C226	*B4	C317	*B3	C413	*D3	C716	D1	CL319	A3	CL379	A2	CL423	*E2	CL900	*A2	FB107	*D4	IC607	C1	R100	E4	R141	*D4	R231	*B4	R409	*E3	R717	*A2	RB600	*A1	RB709	C1		
C136	*C3	C227	*A4	C318	B3	C414	*C2	C717	D1	CL320	A3	CL380	B3	CL424	*D2	CL901	*B2	FB108	*C4	IC609	*E1	R101	E4	R142	*D4	R232	*A4	R410	*E3	R718	*A2	RB601	E2	RB710	*B2		
C137	E3	C228	*A4	C319	B3	C415	*C3	C718	E1	CL321	A3	CL381	A2	CL426	*E2	CL902	*B2	FB200	*B4	IC610	C2	R102	D4	R143	*D4	R233	*A4	R412	*C2	R719	*A2	RB602	*C1	RB711	B1		

4-16 (a)

SE-606/606A, DIO-65
SUFFIX: -13

DIO-65, SE-606/606A
SUFFIX: -13

DIO-65 (1-680-942-13)

C101	A2	IC105	A1
C102	A2	IC106	A1
C103	A2		
C104	A2	L101	A2
C105	A2	L102	A2
C106	A2	L103	A3
C107	A3	L104	A2
C108	A3	L105	A3
C109	A2	L106	A2
C110	A2	L107	A2
C111	A2		
C112	A2	Q103	A3
C113	A2	Q104	A3
C114	A3	Q105	A3
C115	A2		
C116	A2	R102	A2
C117	A3	R103	A2
C118	A2	R104	A2
C119	A2	R107	A3
C120	A3	R108	A1
C121	A2	R109	A2
C122	A2	R110	A2
C123	A2	R111	A3
C124	A3	R112	A3
C125	A2	R113	A2
C126	A2	R114	A2
C127	A1	R115	A3
C128	A2	R116	A1
C129	B1	R117	A1
C130	B1	R118	A1
C131	A1	R119	A1
C132	A1	R120	A3
C133	A1	R121	A2
C134	A3	R122	A2
C135	A3	R123	A1
C136	A2	R124	A1
C137	A2	R125	A1
C138	A2	R126	A3
		R127	A1
CL101	A2	R128	A1
CL102	A2	R129	A1
CL105	A1	R130	A1
CL106	A1	R131	A2
CL107	A1	R132	B1
CL108	A1	R133	A2
CL109	A1	R134	A2
		R135	A3
CN1	A3	R136	A1
CN2	A3	R137	A2
CN3	B1		
CN4	B1	RB101	A1
CT101	A2	TP101	A1
		TP102	A1
D101	B1	TP103	A2
		TP104	A2
E101	A1	TP105	A1
		TP106	A2
FB1	B1		
FB2	B1	X101	A2
FB3	B1		
FB4	B1		
FB5	B1		
FB6	B1		
FB7	B1		
FB8	B1		
FB9	B1		
FB10	B1		
FB11	B1		
FB12	B1		
FB13	B1		
FB14	B1		
FB15	B1		
FB16	B1		
FB17	B1		
FB18	B1		
FB19	B1		
FB20	B1		
FB21	B1		
FB22	B1		
FB23	B1		
FB24	B1		
FB25	B1		
FB26	B1		
FB27	B1		
FB28	B1		
FB29	B1		
IC101	A3		
IC102	A2		
IC103	A2		
IC104	A1		

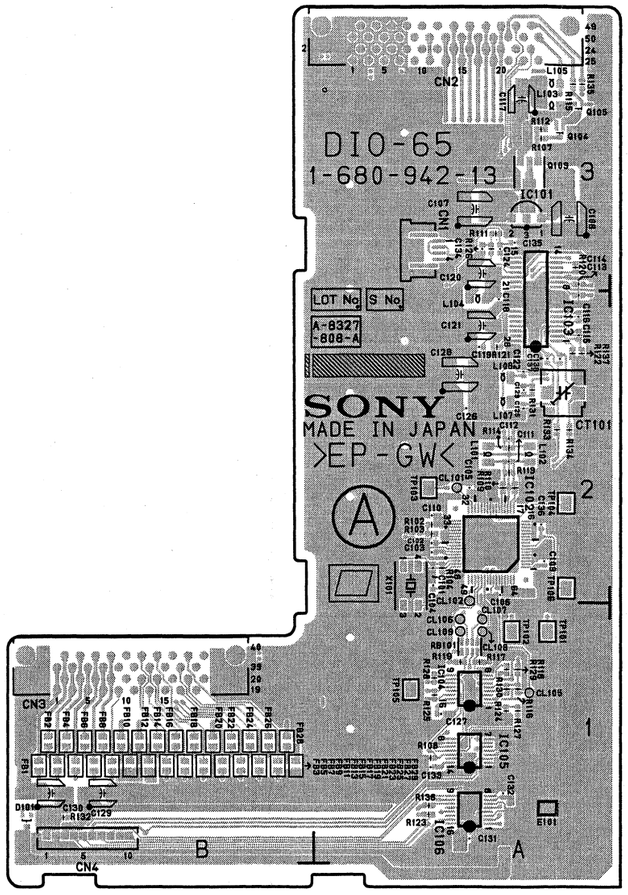

DIO-65 -A SIDE-
SUFFIX: -13

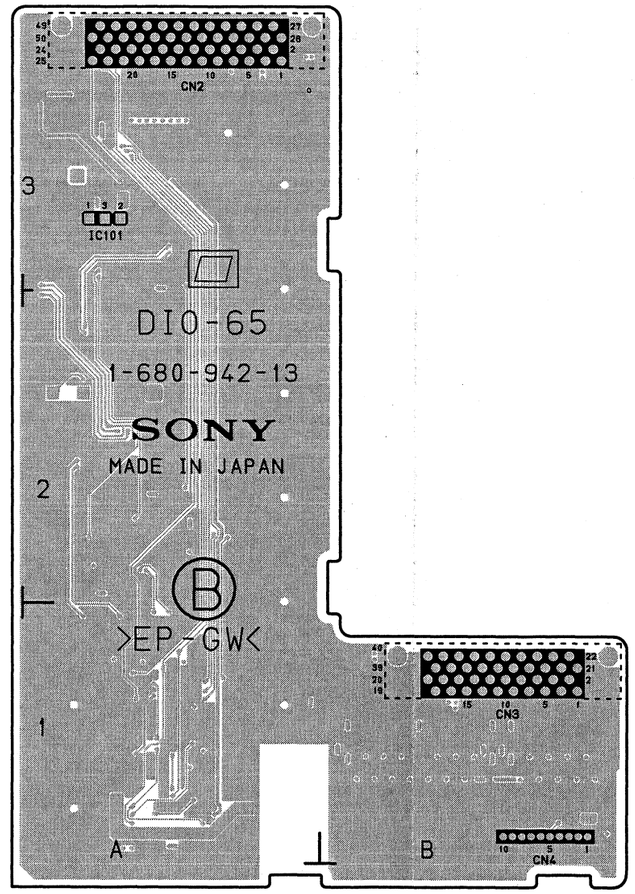

DIO-65 -B SIDE-
SUFFIX: -13

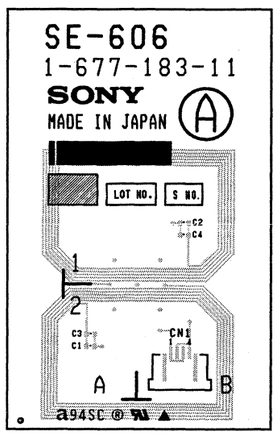

SE-606/606A -A SIDE-
SUFFIX: -11, 21, 22

DM-123 (1-677-266-18)

C101	*P5	C193	*P5	C369	*L4	C710	L3	C969	F4	C1303	*B3	C1488	*C6	C1680	*D2	C1861	F5	D916	*H5	IC507	*J2	IC1504	*E2	L130	N4	Q104	*N5	Q706	*K3	R158	*N4	R252	*N5	R374	M3
C102	*P5	C194	*P5	C370	M4	C711	*K2	C970	F4	C1304	*B3	C1489	*C6	C1681	*E3	C1862	*F5	D917	G4	IC508	K2	IC1505	D1	L132	P4	Q105	*N3	Q707	*K3	R159	*P4	R253	*N5	R375	L2
C103	*P5	C195	*P5	C371	*L3	C712	J3	C971	*H4	C1305	*B3	C1490	*C6	C1682	*D3	C1863	*F5	D918	*H4	IC509	*H2	IC1506	E1	L301	*K5	Q106	*N3	Q710	*K3	R160	*N4	R254	*N5	R376	M2
C104	*P5	C196	*M5	C372	L4	C713	*K3	C972	*H4	C1306	*B3	C1491	*C6	C1683	*D2	C1864	*F5	D1101	*H2	IC510	*H2	IC1510	*D2	L302	L4	Q107	N3	Q711	*K2	R161	*P4	R255	*N5	R377	*L3
C105	*N5	C197	*P4	C373	*L5	C714	*K3	C973	K5	C1308	*B3	C1492	*B4	C1684	*D2	C1865	*F5	D1102	*G2	IC511	*H1	IC1511	*E2	L303	M4	Q108	N3	Q712	*J2	R162	*N3	R256	*P5	R378	*M3
C106	*N3	C198	*P5	C374	*M5	C715	*K2	C974	*L5	C1309	B2	C1493	*C6	C1701	*B4	C1866	*J6	D1103	*G3	IC512	*J1	IC1603	C1	L304	L2	Q109	N3	Q713	*J2	R163	*N3	R257	*N5	R379	*L2
C107	*N2	C199	*P5	C375	*L3	C716	K3	C975	*H4	C1310	*B3	C1494	*C6	C1702	*D4	C1867	J5	D1104	*F1	IC513	P1	IC1606	C3	L305	L4	Q110	N4	Q714	*J3	R164	*N3	R258	*N5	R380	*M2
C108	*N2	C200	*M5	C376	*L4	C717	*K3	C976	*J4	C1311	*B3	C1501	C1	C1703	A5	C1868	*G5	D1201	*H2	IC514	*K2	IC1608	D3	L306	M4	Q111	*N4	Q715	*H3	R165	*N3	R260	*P4	R381	*M2
C109	*N2	C201	*M1	C377	*L5	C718	*K2	C977	*K4	C1312	*C3	C1502	C1	C1704	C4	C1869	*G6	D1204	*F2	IC701	H4	IC1609	E3	L307	*L4	Q112	*P4	Q717	*K3	R166	*N3	R261	*P5	R382	*M3
C110	*N2	C202	*P5	C378	*L5	C719	*J2	C978	*J4	C1313	*C2	C1503	*C1	C1705	*B5	C1870	*G6	D1301	*A3	IC702	K3	IC1610	*C3	L308	*L3	Q113	N4	Q903	G4	R167	*N4	R262	*P5	R383	*M3
C111	*N2	C203	*N5	C379	*L5	C720	*K4	C979	*J4	C1314	B3	C1504	*C1	C1706	*D5	C1871	*G5	D1401	*B1	IC703	K3	IC1611	C3	L309	*M3	Q114	N4	Q920	*E4	R168	N4	R263	*P4	R384	*M3
C112	N2	C204	*N5	C380	*M4	C721	K3	C980	J5	C1316	*B3	C1505	*D2	C1707	B4	C1872	*J5	D1402	*B2	IC704	*J3	IC1612	C3	L310	*L3	Q115	N3	Q1103	G1	R169	*P4	R264	*N5	R385	*M3
C113	N3	C205	N3	C381	M4	C722	*K2	C981	J5	C1317	*B3	C1507	*D2	C1708	*E5	C1873	*J6	D1403	*B2	IC705	*H3	IC1614	D3	L311	M2	Q116	N3	Q1108	G2	R170	P4	R265	P5	R386	*M3
C114	*N5	C206	N3	C382	*L5	C723	*K2	C982	H5	C1318	*A3	C1508	C2	C1709	*B4	C1874	*G5	D1404	*B2	IC706	J3	IC1701	*B4	L312	M2	Q117	N3	Q1111	*F2	R171	*N4	R266	P5	R387	*M4
C115	*N4	C207	*N3	C383	*M5	C724	*J3	C983	K4	C1319	A3	C1509	*C2	C1710	*A5	C1875	*G6	D1405	*A2	IC707	*J2	IC1702	B4	L313	*L3	Q118	*P4	Q1203	G2	R172	*P4	R267	*P5	R388	*M4
C116	*N3	C208	*N3	C384	*M5	C725	*J3	C984	J4	C1320	*A3	C1510	*C2	C1711	*C6	C1901	*H5	D1406	*A2	IC901	G4	IC1703	D4	L314	*M3	Q119	*N4	Q1210	*F2	R173	*N4	R268	*M5	R389	*M4
C117	*N5	C209	*N4	C385	*L5	C726	J4	C985	J4	C1322	A3	C1511	*C2	C1712	D6	C1902	*G5	D1501	*D1	IC902	G3	IC1704	D6	L315	*M4	Q120	*P4	Q1301	B2	R174	*N4	R269	*N5	R390	*M4
C118	*N3	C211	P4	C386	*M5	C727	*J3	C986	J5	C1323	A3	C1512	*C2	C1713	*D6	C1903	*G5	D1502	*C2	IC903	H3	IC1705	B6	L316	*M4	Q121	*N4	Q1302	*B3	R175	*N4	R270	N5	R391	*M5
C119	*N3	C212	P4	C387	*L5	C728	*J3	C987	J5	C1324	*A3	C1513	*C2	C1714	A5	C1904	*G5	D1601	D3	IC904	*H4	IC1706	C5	L317	*K4	Q122	N4	Q1401	*B3	R176	*P4	R271	N5	R392	*M4
C120	*N4	C213	P4	C388	*M5	C729	*H3	C988	H5	C1325	*A3	C1514	*C2	C1715	*A5			D1602	*C3	IC905	G3	IC1707	C4	L318	*L4	Q123	*N3	Q1402	*B4	R177	*N4	R272	N5	R393	*M4
C121	*N4	C214	*P4	C389	*L5	C730	*K3	C989	*H5	C1326	*A3	C1515	*C2	C1716	*D6	CL1	*D5	D1603	*E2	IC906	E4	IC1708	*C5	L319	*M5	Q124	*P3	Q1403	*B3	R178	P3	R276	N3	R394	*K3
C122	*P4	C215	*P3	C390	*M4	C731	*H3	C990	*J5	C1327	*A3	C1516	*C2	C1717	*B6	CL2	*D5	D1604	*D2	IC907	E5	IC1709	C5	L502	*L2	Q125	N4	Q1404	*C6	R179	P3	R277	N3	R395	*K3
C123	N4	C216	*P4	C391	*L3	C732	*H3	C991	*K5	C1328	*A3	C1517	*C2	C1718	*D6	CL3	*B5	D1701	*A4	IC908	F3	IC1710	C5	L503	*M1	Q126	*N3	Q1405	*A2	R180	P4	R278	*N3	R396	*M4
C124	P4	C217	P4	C392	*M4	C733	*K3	C1102	*F1	C1329	*A3	C1518	*C2	C1719	*B5	CL4	*B5	D1705	*D4	IC910	E4	IC1711	C5	L504	*M1	Q127	*P3	Q1406	*B1	R181	P4	R279	*N3	R397	*M4
C125	*N3	C301	*M5	C502	*N1	C734	K3	C1103	*G1	C1330	*A3	C1519	C2	C1720	*D5	CL101	*P6	D1706	*A4	IC911	E4	IC1712	*B5	L505	*L1	Q128	N4	Q1407	*A2	R182	N3	R280	*N4	R399	*K3
C126	N4	C302	*M5	C503	P2	C735	*K3	C1104	*G1	C1332	C1	C1521	*C2	C1721	*B5	CL103	*N5	D1802	D1	IC912	E4	IC1713	*A5	L506	*L1	Q129	*N3	Q1408	*B2	R183	N3	R282	*P4	R400	*M3
C127	P4	C303	*K4	C504	M2	C736	*K2	C1105	*G2	C1401	*C1	C1522	*C2	C1722	*B6	CL104	*N5	D1803	E1	IC913	*K4	IC1714	*D5	L511	*K1	Q130	*P3	Q1409	*A2	R184	N4	R283	P4	R401	*M3
C128	N4	C304	*K4	C505	*N1	C737	K4	C1106	H1	C1402	*B2	C1523	*C2	C1723	*D6	CL106	*P4	D1804	*E3	IC914	*J4	IC1715	*D4	L512	K2	Q131	*P3	Q1410	*A2	R185	N4	R301	*M5	R402	*L4
C129	P4	C305	*K4	C506	*N2	C738	*H3	C1107	H2	C1403	B3	C1524	*D1	C1724	*B6	CL107	*P4	D1805	E5	IC915	K5	IC1716	C6	L515	M2	Q132	*P3	Q1501	C2	R186	P3	R302	*M5	R403	*L4
C130	*N4	C306	*K4	C507	*N1	C739	J4	C1108	*G1	C1404	B3	C1525	E2	C1725	*D6	CL108	*M2	D1809	E5	IC916	G4	IC1717	*B5	L516	*K2	Q133	*P4	Q1502	*C2	R187	*P4	R303	*M5	R404	*L4
C131	P4	C307	*K4	C508	*N2	C740	J4	C1109	H1	C1405	*B3	C1526	*D1	C1726	*B6	CL109	*L1	D1810	E5	IC917	H4	IC1718	*A4	L701	J3	Q134	*P4	Q1601	*C1	R188	N3	R304	*K4	R405	*L3
C132	N4	C308	*M5	C509	P2	C742	*K2	C1110	*G1	C1406	B3	C1527	*D3	C1727	*D6	CL110	*N1	D1910	J5	IC918	H4	IC1800	E3	L702	*K2	Q135	*M2	Q1602	*D1	R189	*N4	R305	*K4	R406	*M5
C133	P3	C309	*L4	C510	*H4	C744	*M1	C1111	*G1	C1407	B3	C1528	D2	C1728	*D5	CL112	*M5			IC919	*K5	IC1802	*H5	L703	J3	Q136	P5	Q1603	*D2	R190	*P4	R306	*M4	R407	*M5
C134	N3	C310	K5	C511	*N2	C901	*F4	C1112	*G1	C1408	*B2	C1529	E2	C1729	*D5	CL113	*P5	DL101	N5	IC920	F4	IC1803	*F3	L706	J4	Q137	*N5	Q1604	*D3	R191	*N3	R308	*K4	R409	*L5
C135	*N4	C311	K4	C512	*N1	C902	*F4	C1114	*G1	C1409	*B3	C1530	*D1	C1730	*D5	CL301	*M5	DL103	P3	IC921	F4	IC1804	*F4	L707	J4	Q138	*L2	Q1605	*D3	R192	*N3	R309	*K4	R410	*L5
C136	*N4	C312	*L4	C513	*N1	C903	G3	C1116	*G2	C1410	*B3	C1531	*D1	C1731	*C5	CL303	*L5	DL301	L4	IC922	G5	IC1805	G3	L708	J3	Q139	*P4	Q1606	*D2	R193	*P3	R312	*K4	R411	*M4
C137	*P4	C313	*L4	C514	P1	C904	*H3	C1117	*G1	C1411	B3	C1532	*E1	C1732	C4	CL304	*L4	DL303	M3	IC923	*F4	IC1806	F5	L903	*G4	Q140	*L1	Q1607	*E2	R194	*P3	R314	*M4	R412	*L5
C138	*N4	C314	*L5	C515	*N1	C905	*H4	C1118	G2	C1412	*B3	C1533	*D1	C1733	*A4	CL306	*M4			IC925	*E4	IC1807	F5	L904	*G3	Q141	*P4	Q1608	*D2	R195	N4	R315	*M4	R413	*L5
C139	N3	C315	*L4	C516	*J4	C906	*H4	C1119	*G1	C1413	*C2	C1534	*E1	C1734	C4	CL307	*M4	E101	P6	IC927	F4	IC1809	F5	L905	*E4	Q142	P5	Q1801	F6	R196	N3	R316	*K4	R414	*L5
C140	P3	C316	*M4	C517	M1	C907	*F4	C1121	*G1	C1414	*B3	C1535	*D1	C1735	C5	CL308	*K4	E102	P3	IC929	*J4	IC1810	*F5	L906	K5	Q143	P5	Q1802	*E5	R197	N3	R317	*K4	R415	*L5
C141	N3	C317	L4	C518	*J4	C908	*G4	C1122	*G2	C1415	*B3	C1536	*E1	C1736	C5	CL309	*L1	E103	L1	IC930	*H4	IC1814	E6	L908	L5	Q144	N3	Q1803	*E5	R198	N3	R318	*K4	R416	*L5
C142	P3	C318	M4	C519	M2	C909	E3	C1125	*G1	C1416	B3	C1601	*C1	C1737	*B5	CL310	*M1	E104	*N4	IC931	*J5	IC1815	*H6	L909	L5	Q145	N3			R199	N3	R319	*L4	R417	*L5
C143	*N3	C319	*L2	C520	L1	C910	E3	C1126	F2	C1417	*C6	C1602	*D3	C1738	*A5	CL311	*L5	E301	M5	IC932	*J5	IC1816	*H5	L910	K4	Q146	*N3	R101	*N4	R200	P3	R320	*L4	R418	*L5
C144	*P3	C320	L4	C521	M1	C911	G4	C1128	*F1	C1418	*B2	C1604	*D1	C1739	*D5	CL312	*L5	E302	M3	IC934	*K5	IC1818	*E5	L911	J4	Q147	*N3	R102	*N4	R201	P3	R321	*L4	R419	*M5
C145	*N3	C321	M4	C522	M1	C912	E4	C1131	F1	C1419	B1	C1605	C1	C1740	*D4	CL502	*P1	E303	*L4	IC935	*J5	IC1819	E6	L912	J4	Q148	N4	R103	N3	R202	P3	R322	*L4	R420	*L5
C146	*P3	C322	L2	C523	L2	C913	*F3	C1132	*F2	C1420	*A2	C1607	D3	C1741	*D4	CL503	*M1	E503	K1	IC936	*K5	IC1820	*E5	L913	K5	Q301	*L4	R104	N4	R203	P3	R323	*L4	R421	*M5
C147	*P2	C323	L4	C524	M1	C914	*F3	C1133	*F1	C1421	*A2	C1608	D1	C1742	C6	CL504	*K1	E701	H4	IC937	*H4	IC1821	*G6	L914	J5	Q302	*L4	R105	N3	R204	N3	R326	*L5	R422	M5
C148	*N2	C324	M4	C525	M1	C915	*E4	C1134	F2	C1422	*B1	C1610	*D1	C1801	*E5	CL505	*K1	E702	*J3	IC938	*H4	IC1822	*E5	L915	H5	Q303	*L4	R106	*P5	R205	P3	R327	*M4	R423	M5
C149	*P3	C325	*L2	C526	*M1	C916	*G4	C1135	*F1	C1423	*B1	C1611	*D1	C1802	*H5	CL507	*H3	E1101	*E1	IC939	*K5	IC1823	E5	L1103	*F1	Q304	*L4	R107	*P5	R206	*N4	R328	*L4	R424	L5
C150	N3	C326	*L3	C527	*M1	C917	*E4	C1138	*F1	C1425	*B2	C1612	D1	C1803	*E3	CL508	*N1	E1201	E2	IC1101	*G1	IC1824	H5	L1104	*H1	Q305	*M4	R108	*P5	R207	*P3	R329	*L4	R425	*M5
C151	*N2	C327	*L3	C528	*M1	C918	*E4	C1139	*F2	C1426	*A2	C1613	D1	C1804	*G3	CL702	*L2	E1301	B3	IC1102	*G2	IC1825	*H6	L1105	*H1	Q306	*L4	R109	*P4	R208	*P3	R330	*L4	R426	*L3
C152	*P2	C328	*L3	C529	*M1	C919	*E4	C1140	F2	C1427	A2	C1615	*D1	C1806	F6	CL703	*K1	E1401	*B1	IC1103	*G1	IC1826	*H5	L1106	F1	Q307	*M4	R111	*P4	R209	*N3	R331	*L4	R427	*L3
C153	*P2	C329	M3	C530	*L1	C920	*E4	C1141	F1	C1428	A1	C1616	*D1	C1807	*F6	CL704	*K2	E1501	D1	IC1105	G2	IC1827	F5	L1202	*F2	Q308	*M3	R112	*P4	R210	*P3	R332	L4	R505	*N1
C154	P3	C330	L3	C532	M1	C921	*J4	C1142	*E2	C1429	*A1	C1617	D1	C1808	*G5	CL705	*J2	E1601	*C3	IC1106	H2	IC1828	F5	L1205	F2	Q309	*L3	R113	*P4	R211	*P2	R333	L4	R506	*K3
C155	*P3	C331	M3	C533	*K1	C922	*K5	C1143	*E2	C1430	*A1	C1618	*C1	C1809	*G5	CL707	*H3	E1701	E6	IC1107	*F2	IC1829	J5	L1206	*G3	Q310	*L3	R116	*N5	R212	*P2	R334	*L4	R507	*H3
C156	*P3	C332	L3	C534	*K1	C923	*K6	C1144	*E2	C1432	*A1	C1619	*C1	C1810	*F6	CL907	*G4	E1702	C6	IC1108	F2	IC1830	G5	L1207	G3	Q311	*M3	R117	*N5	R213	*P3	R335	*M4	R508	*N1
C157	*P2	C333	*M3	C535	*J2	C924	*F4	C1145	*F2	C1433	*A1	C1620	*C1	C1812	*F6	CL908	H3	E1801	J5	IC1109	E1	IC1833	*G6	L1301	*C3	Q312	*L3	R120	*N5	R214	*P3	R337	*M4	R509	*N1
C158	*P5	C334	*L3	C536	*J2	C925	*F4	C1148	*G2	C1434	*C2	C1622	C2	C1813	*E3	CL909	G3			IC1114	*G2	IC1834	E3	L1302	*C3	Q313	*M3	R121	*N5	R215	*P3	R338	*L4	R510	*H3
C159	P2	C335	L3	C537	M1	C926	*G4	C1201	G3	C1435	*B2	C1623	*D3	C1814	*E3	CL910	H4	FL501	N1	IC1201	*G2	IC1835	*F6	L1303	B3	Q314	*L2	R122	*N5	R216	*P3	R339	*M4	R511	*N2
C160	*N5	C336	M3	C538	L1	C927	H4	C1202	*F2	C1436	*B1	C1624	D3	C1815	*F6	CL1102	*F1	FL502	N2	IC1202	*G3	IC1838	*G5	L1304	C3	Q315	*M2	R123	*N5	R217	*P3	R340	*L4	R512	*N2
C161	P3	C337	L2	C539	*K1	C928	L5	C1203	*G2	C1437	*B2	C1625	*D3	C1817	*F5	CL1202	*F2	FL503	J2	IC1203	*G2	IC1839	*G5	L1305	A3	Q316	*M3	R125	*N2	R218	*P5	R341	*M4	R513	*N1
C162	*P5	C338	M2	C540	*H1	C930	*H5	C1204	*G2	C1438	*B1	C1626	*D3	C1818	*F6	CL1301	*A3	FL504	J1	IC1207	*F3	IC1840	*F6	L1310	*A1	Q317	*M3	R126	*N2	R219	*P5	R342	L4	R514	*N1
C163	*M2	C339	M2	C541	*L1	C931	*K5	C1205	*G2	C1439	*C1	C1627	*D3	C1819	F5	CL1401	*B1	FL701	L2	IC1208	F2	IC1841	*F6	L1401	B3	Q318	*M3	R127	*N2	R220	*P5	R343	*L4	R515	*H3
C164	*M2	C340	*L3	C543	*L1	C932	*E4	C1206	*G2	C1440	*B2	C1628	*D3	C1820	*F5	CL1403	*A3	FL702	L3	IC1209	E2			L1402	A2	Q319	*M3	R128	*N2	R221	*P5	R344	M4	R516	*K3
C165	*L2	C341	*M3	C546	*J2	C933	H4	C1207	*G2	C1441	*B2	C1630	*D3	C1821	*F5	CL1404	*A2	FL703	J3	IC1214	*G3	L102	N3	L1403	*B2	Q320	*L4	R129	*N2	R222	*P5	R345	*M4	R517	*N1
C166	*P4	C342	*M2	C547	*H2	C934	*G3	C1209	*G2	C1442	B2	C1631	*D3	C1822	*F5	CL1601	*C3	FL1101	G1	IC1215	*E2	L103	N3	L1501	*C1	Q321	M5	R130	*N2	R223	*P5	R346	*L4	R518	*N1
C167	*P4	C343	*M5	C548	*H2	C935	*L5	C1210	*G2	C1443	*B2	C1632	E3	C1823	*F5	CL1603	*D2	FL1201	G2	IC1216	*E2	L104	N3	L1502	*C1	Q322	*L5	R131	N3	R224	*P4	R347	*L3	R519	*N1
C168	*P4	C344	*M2	C549	*H2	C936	*K5	C1211	*F3	C1444	*B2	C1633	*E3	C1827	E5	CL1604	*D2	FL1800	*J6	IC1217	*F2	L105	*N3	L1503	C2	Q323	*L3	R132	*N5	R225	*P4	R348	*M4	R520	*P2
C169	*P4	C345	*L2	C550	*H1	C937	J5	C1212	*G3	C1446	*C1	C1634	*E3	C1828	*E6	CL1807	*G5	FL1801	*J5	IC1301	B2	L106	N3	L1504	C2	Q324	M4	R133	*N4	R226	M2	R349	*M3	R521	*M1
C170	*N3	C346	*M2	C551	*J1	C938	*G3	C1213	*G2	C1449	*B2	C1635	*D3	C1829	*F3	CL1808	*H5			IC1303	*A3	L107	N4	L1505	C2	Q325	M4	R134	N2	R227	M2	R350	M3	R522	*N1
C171	*N4	C347	M2	C552	*J1	C939	*J4	C1214	*G2	C1450	*B2	C1636	*C3	C1831	*E5	CL1809	*H5	IC101	P5	IC1304	*A3	L108	P4	L1506	C2	Q501	*H3	R135	N3	R228	*P4	R351	M3	R523	*N1
C172	*P4	C348	*M2	C553	*H1	C940	*H3	C1215	*G2	C1457	*B2	C1637	*D2	C1834	*E5	CL1810	*H5	IC102	N5	IC1305	B3	L109	N4	L1507	E2	Q502	*H3	R136	*N4	R229	*P4	R352	M3	R524	*H3
C173	M2	C349	*M3	C554	*J1	C941	J4	C1217	*G2	C1458	A2	C1638	*C3	C1835	*F5	CL1811	*H5	IC103	N2	IC1306	A3	L110	P4	L1601	D1	Q503	*J4	R137	*N5	R230	*P4	R353	M3	R525	M1
C174	M2	C350	*M3	C555	*J1	C942	*G3	C1218	*G3	C1459	*A2	C1639	*C3	C1839	*F5	CL1812	*G5	IC104	*P5	IC1307	*E6	L111	*P3	L1602	E2	Q504	*J4	R138	*N3	R231	*P4	R354	L3	R526	*J3
C175	*N5	C351	*M3	C556	*L2	C943	J4	C1220	*G2	C1460	*B3	C1640	*C3	C1841	*E5			IC105	*P3	IC1308	*B3	L112	N4	L1603	*C2	Q505	N1	R139	*N3	R233	M2	R355	L3	R527	*N2
C176	N5	C352	*L5	C557	L2	C944	G4	C1222	*F2	C1461	A2	C1641	*C3	C1843	*E6	CN10	M6	IC106	L2	IC1309	*C6	L113	*N3	L1610	D3	Q506	M1	R140	*N3	R234	N5	R356	L3	R528	*N1
C177	*P5	C353	*M5	C558	K2	C945	J5	C1227	*F3	C1462	B2	C1642	*C2	C1844	E6			IC107	P4	IC1310	*F6	L114	N4	L1701	C6	Q507	N2	R141	*N3	R235	*P5	R357	L3	R529	*J3
C178	*M2	C354	*K4	C559	*L1	C946	*K5	C1228	*F2	C1463	B2	C1643	*D2	C1845	*E6	D101	*N5	IC108	N5	IC1311	*C2	L115	*P3	L1702	A5	Q508	M1	R142	*N3	R236	*P5	R358	M3	R530	M1
C179	P4	C355	*K4	C562	K1	C947	J4	C1229	F3	C1464	*B3	C1644	C3	C1846	*E6	D301	*L5	IC109	*P5	IC1402	B2	L116	*N3	L1803	F6	Q509	M1	R143	*N3	R237	*M2	R360	L3	R531	*L1
C180	*M2	C356	*M4	C563	K1	C949	*K5	C1230	*F2	C1468	A1	C1645	*C3	C1847	*E6	D501	*J3	IC301	*K4	IC1403	*C6	L117	N2	L1804	F6	Q510	M1	R144	*N3	R238	*M2	R361	*L3	R532	*L1
C181	*P5	C357	*M4	C565	*H3	C950	*H4	C1233	*F2	C1469	*A1	C1646	*C3	C1849	*G6	D502	*H3	IC302	M5	IC1404	A2	L118	P2	L1805	F5	Q512	*K1	R145	N5	R239	*P5	R362	*M3	R533	*J3
C182	*L2	C358	*M4	C567	*K2	C951	*J5	C1234	*F2	C1470	*A1	C1647	*C3	C1850	*E5	D503	*K1	IC303	*K4	IC1405	A2	L119	P2	L1807	E5	Q513	*K1	R146	N5	R240	*P5	R363	*L3	R534	*L1
C183	*L2	C359	*M4	C568	*K2	C952	*J5	C1235	F2	C1471	B1	C1657	*B2	C1851	E5	D504	*K1	IC304	L5	IC1406	*C2	L120	*L2	L1808	E5	Q514	*K1	R147	*N3	R241	*M2	R364	*L3	R535	*M1
C184	L2	C360	*L5	C570	K2	C953	*H4	C1236	F2	C1472	B1	C1658	*D2	C1852	*E5	D701	*J4	IC305	*M2	IC1407	B2	L121	*P4	L1809	*H6	Q515	*J2	R148	*N3	R243	*N5	R365	*M3	R537	*M1
C185	*N5	C361	*K4	C701	*K3	C961	*H4	C1237	*F2	C1480	*A2	C1659	*D2	C1853	J6	D702	*J2	IC306	L5	IC1408	B1	L122	*P4	L1810	*H6	Q516	K2	R149	*N4	R244	*N5	R366	*M3	R538	*M1
C186	*N5	C362	*K3	C702	*H4	C962	*G4	C1238	G3	C1481	*A2	C1661	D2	C1854	H6	D703	*J3	IC308	L5	IC1409	B2	L123	P4			Q517	*H2	R150	*P4	R245	*L2	R367	L2	R539	*M1
C187	L1	C363	*M4	C704	*K3	C963	*G4	C1239	*E2	C1482	*A2	C1662	C2	C1855	*F5	D910	*F4	IC309	*M5	IC1410	*A2	L124	*L2	LV1401	A2	Q518	*H1	R151	*N4	R246	*P5	R368	L2	R540	M1
C188	*L2	C364	*M4	C705	*K3	C964	*H4	C1240	*E2	C1483	*D6	C1663	E2	C1856	F5	D911	G4	IC502	H3	IC1411	*A2	L125	*P5	LV1601	D2	Q520	*K2	R153	*P4	R247	*L2	R369	L3	R541	M1
C189	L2	C365	*L5	C706	L3	C965	*H4	C1241	*F2	C1484	*D5	C1664	D3	C1857	*F5	D912	G4	IC503	*N1	IC1413	A1	L126	N3			Q702	*L2	R154	*N4	R248	*L1	R370	L3	R542	*M1
C190	*N5	C366	*K4	C707	L4	C966	*H3	C1242	*F2	C1485	*E5	C1665	*D2	C1858	*F5	D913	G4	IC504	*N1	IC1501	D2	L127	N3	Q101	*N5	Q703	*K2	R155	*N4	R249	*L2	R371	M2	R543	*M1
C191	P5	C367	*M4	C708	L3	C967	*H4	C1301	B3	C1486	*B3	C1666	*D3	C1859	F5	D914	G4	IC505	*M1	IC1502	D3	L128	*N3	Q102	*N4	Q704	*L3	R156	*N4	R250	*L1	R372	M2	R544	P1
C192	*N5	C368	*L4	C709	*K3	C968	F4	C1302	B3	C1487	*B4	C1667	*D3	C1860	*F5	D915	*J5	IC506	*J4	IC1503	*D1	L129	*N3	Q103	N3	Q705	*K3	R157	*N4	R251	*M1	R373	M3	R545	N1

R546	N1	R718	*K3	R940	*E4	R1221	*G2	R1379	B1	R1523	*D2	R1685	*D3	R1867	*E5		
R548	L1	R719	*K3	R941	*E4	R1222	*G2	R1380	*B1	R1524	*D2	R1686	*D3	R1868	*E5	S1301	*D6
R549	*M1	R720	*L2	R942	*E4	R1224	*H2	R1381	B1	R1525	*D1	R1687	*D3	R1869	*E5	S1701	D1
R550	N1	R721	*L2	R943	*E4	R1225	*H2	R1382	*B1	R1526	*E2	R1688	*D3	R1870	*E5	S1801	E1
R551	N1	R722	*L2	R944	*E4	R1231	*G3	R1383	*A2	R1527	*E3	R1689	*E2	R1871	*F5		
R552	M1	R723	*K2	R945	H4	R1233	*G3	R1384	*A2	R1528	*E1	R1690	*E3	R1873	*E4	TH1402	*A1
R553	M1	R724	*L2	R946	*G4	R1237	*G2	R1385	*A1	R1529	*E1	R1691	*E3	R1875	*F3		
R554	N1	R725	*K2	R947	*H4	R1240	*H2	R1386	*B2	R1530	*E1	R1692	*D3	R1878	*E6	TP101	P6
R555	N2	R726	*L3	R948	*H4	R1241	*G3	R1387	*A1	R1531	*D2	R1693	*D2	R1879	*E6	TP102	M1
R556	N2	R727	*L3	R949	*H4	R1242	*G3	R1388	*A1	R1532	*D2	R1694	*D2	R1881	*E6	TP105	P3
R557	N2	R728	*L3	R950	*H4	R1246	*F2	R1390	*B2	R1533	D1	R1695	*D2	R1882	*E6	TP106	P4
R559	N2	R729	*K3	R951	*H4	R1247	*F2	R1391	*B2	R1535	*C1	R1696	*D3	R1883	*E6	TP107	P4
R560	M1	R730	*L3	R952	*H4	R1248	*F2	R1392	*B1	R1536	*C3	R1697	*D2	R1884	*E6	TP109	L1
R561	M1	R731	*K3	R954	*G4	R1249	*F3	R1393	*B2	R1537	*C2	R1698	*D1	R1885	*E5	TP110	N1
R562	N2	R732	*K3	R955	*G4	R1250	*F3	R1394	*B2	R1538	*C1	R1699	*D2	R1886	*E5	TP111	L1
R563	M1	R737	*K3	R956	E4	R1251	*F3	R1395	*B2	R1539	*C1	R1701	*D4	R1887	*H6	TP112	M5
R564	M1	R738	*K3	R957	E5	R1252	F2	R1396	*B2	R1541	*D3	R1702	*A5	R1888	*E5	TP301	M5
R565	M1	R739	*K3	R958	E4	R1253	F3	R1397	*B2	R1542	*C1	R1703	*C5	R1889	*E5	TP302	M1
R566	M2	R740	*K3	R959	E5	R1267	*F2	R1398	*B2	R1546	*D3	R1704	*A5	R1890	*E5	TP305	M2
R568	M1	R741	*K3	R993	*E4	R1268	F2	R1399	*B2	R1547	*D3	R1705	*C5	R1891	*E5	TP306	M4
R569	M1	R742	*K3	R994	*E4	R1269	*F2	R1401	*B2	R1548	*C1	R1706	*A5	R1892	*F5	TP307	M4
R570	M1	R743	*K3	R995	*E4	R1301	B2	R1402	*B2	R1549	*D3	R1707	*C5	R1894	*G5	TP309	L1
R571	*M1	R746	*K3	R1004	*H5	R1302	*B4	R1403	*B4	R1550	D3	R1711	*C4	R1896	F5	TP310	M1
R572	*M1	R747	*K2	R1005	*J5	R1306	*B3	R1404	*B2	R1551	D3	R1712	*D5	R1897	*F5	TP311	L5
R573	M1	R748	*K2	R1006	*K5	R1307	*B3	R1405	*D6	R1552	D3	R1713	*B5	R1898	*F5	TP312	L5
R574	M1	R749	*K2	R1007	*K5	R1308	*B3	R1406	*B2	R1553	*C1	R1714	*D6	R1901	*E5	TP501	K1
R575	*K1	R750	*K2	R1009	*K5	R1309	*B3	R1410	*B2	R1554	D3	R1715	*B5	R1902	*E5	TP502	P1
R576	*K1	R751	*J2	R1010	*K5	R1310	*B3	R1411	*C6	R1555	*D2	R1716	*D6	R1903	*E5	TP503	M1
R577	*K1	R752	*J2	R1012	*K5	R1311	B3	R1412	*B2	R1556	D3	R1717	*C4	R1904	*E5	TP506	K1
R578	*K1	R755	*K3	R1015	*J5	R1312	B3	R1423	*A2	R1557	*E2	R1718	*C4	R1906	*F5	TP508	N1
R579	*K1	R756	*K2	R1019	*H4	R1313	C3	R1424	*A2	R1559	*C1	R1719	*D5	R1907	J5	TP703	K1
R580	*K1	R757	*K2	R1020	*F3	R1314	*B2	R1425	*A3	R1560	*C1	R1721	*C5	R1908	J6	TP706	K1
R581	*K1	R758	*J3	R1021	*F3	R1315	*B2	R1426	*B2	R1561	*D2	R1722	*C5	R1909	*F5	TP901	G4
R582	*K1	R759	*J3	R1022	*K5	R1316	*B2	R1427	*B2	R1562	*D2	R1723	*D4	R1910	J5	TP1102	F1
R583	*K2	R760	*J2	R1023	*F3	R1317	B2	R1428	*A2	R1563	*D1	R1724	*B5	R1911	*F5	TP1202	F2
R584	*J2	R761	*J3	R1114	H2	R1318	B3	R1429	*B3	R1564	*D3	R1725	*D5	R1912	*G5	TP1302	B3
R585	*J2	R762	*J3	R1115	G1	R1319	B3	R1435	*B2	R1565	*D3	R1726	*A4	R1913	*G5	TP1401	B1
R586	*J2	R763	*J3	R1116	G1	R1320	B3	R1436	*A2	R1566	*D3	R1727	*A4	R1914	*G6	TP1402	B2
R587	*J2	R764	*J3	R1117	G1	R1321	*B2	R1438	*B2	R1567	*D1	R1728	*D5	R1917	*E5	TP1501	D1
R588	K2	R765	*J3	R1118	*F1	R1322	*B3	R1439	*B1	R1568	*D1	R1729	*A4	R1925	J5	TP1502	E1
R589	K2	R766	*J3	R1119	*F2	R1323	A2	R1443	*B2	R1571	*D2	R1730	*A4	R1926	*D4	TP1601	C3
R590	K2	R768	*J3	R1120	*G1	R1324	*A3	R1446	*A1	R1572	D1	R1731	*A5	R1927	*F3	TP1602	C3
R591	K2	R769	*J3	R1121	*F1	R1325	*A3	R1447	B1	R1575	D1	R1732	*D5	R1928	*G5	TP1801	F5
R592	*H2	R770	*H3	R1122	*G1	R1326	*A3	R1449	*B1	R1576	*D1	R1733	*D4	R1929	*E3		
R593	*H2	R771	*H3	R1123	*G1	R1327	*A3	R1450	*A1	R1578	*D1	R1734	*D4	R1931	*E3	X301	K4
R594	*H1	R772	*J1	R1124	*G1	R1328	*A3	R1452	*A1	R1579	D1	R1735	*A5	R1933	*E3	X302	K4
R595	*H2	R773	*J1	R1125	*G1	R1329	*A3	R1453	*A1	R1580	*D1	R1736	*A5	R1934	G5	X901	E3
R596	*H2	R774	*J2	R1126	*G1	R1330	*A3	R1456	*B1	R1583	*D1	R1737	*D4	R1935	*F6		
R597	*H2	R775	*K2	R1127	*H1	R1331	*A1	R1467	*A1	R1584	*C1	R1738	*A4	R1936	*F5	*:B SIDE	
R598	*H2	R776	*K2	R1128	*H1	R1332	B3	R1468	*E5	R1585	*D2	R1739	*D4				
R599	*H2	R777	*K2	R1129	H2	R1333	*C1	R1469	*D6	R1586	C2	R1740	*D4	RB901	*F4		
R600	*H1	R781	*K2	R1135	G2	R1334	*B2	R1470	*D5	R1587	C2	R1744	*B5	RB902	M5		
R601	*J2	R784	*K2	R1137	*G2	R1335	*B2	R1471	*B4	R1588	*C2	R1745	*B5	RB903	*G4		
R602	*J2	R785	*K3	R1138	*G2	R1336	*B1	R1472	*C6	R1590	*D3	R1801	*E5	RB904	*G4		
R603	*J1	R805	*J2	R1139	G2	R1337	*B2	R1473	*C6	R1591	*D3	R1802	*E3	RB907	*G4		
R604	H1	R901	*H3	R1142	*G1	R1338	*C1	R1480	*A2	R1592	D3	R1803	*E3	RB908	*F4		
R607	*J1	R902	*F4	R1144	*H2	R1339	*C1	R1481	*A2	R1593	*D3	R1804	*E3	RB1301	*B1		
R608	*K1	R903	*E4	R1145	*H2	R1340	*C1	R1482	*B2	R1594	*D3	R1805	*E3	RB1302	*B2		
R609	*J1	R904	*F3	R1146	*H2	R1341	*C1	R1483	*A2	R1595	D3	R1807	*F3	RB1501	*D3		
R610	*J1	R905	*E4	R1147	*G2	R1342	C1	R1484	*A2	R1596	*D3	R1813	*F3	RB1601	*D2		
R611	*J1	R906	*G3	R1150	*G2	R1343	*B2	R1485	*B2	R1597	*D3	R1814	*F6	RB1801	*H5		
R612	*J1	R907	*G3	R1152	*F1	R1344	*B3	R1486	*B2	R1598	*D3	R1815	*E4	RB1802	*G5		
R613	*K1	R908	*G3	R1153	*F1	R1345	*B3	R1487	*B2	R1599	*D3	R1816	*F6	RB1803	J6		
R614	*J1	R909	*G3	R1154	*F1	R1346	*B2	R1488	*B2	R1600	*D3	R1817	*G6	RB1804	*G3		
R617	*K1	R910	*G3	R1155	*F2	R1349	*B3	R1489	*A2	R1601	*D3	R1818	*F5	RB1805	*H5		
R618	*K2	R911	*G3	R1156	*F2	R1350	*B3	R1490	*A2	R1602	*E3	R1819	*F5	RB1806	*G5		
R619	*K1	R912	*H4	R1157	*F2	R1351	*B2	R1491	*A2	R1603	*D3	R1820	*F4				
R624	*K2	R913	*G3	R1158	F1	R1352	*B2	R1492	*A2	R1605	*D2	R1821	*F4	RV101	N4		
R625	*K2	R914	*E1	R1159	F2	R1353	*B2	R1493	*A2	R1606	*D2	R1822	*F3	RV102	N3		
R626	*L2	R915	*H3	R1160	*E3	R1354	*B3	R1494	*A2	R1607	*C2	R1824	*F6	RV104	P3		
R627	*K2	R916	*F4	R1161	*E3	R1355	*B3	R1495	*A2	R1608	*C3	R1828	F6	RV109	P4		
R628	*K2	R918	*G4	R1162	*E3	R1356	B3	R1496	*B2	R1609	*C3	R1829	*F3	RV110	P4		
R629	*J2	R919	*M5	R1163	*E3	R1357	B3	R1497	*C2	R1610	*C3	R1830	*F3	RV111	P4		
R630	*L2	R920	*M5	R1164	*F3	R1358	*B3	R1498	*C2	R1611	*C3	R1831	*D1	RV112	P4		
R631	*J2	R921	*M5	R1165	*F3	R1359	*B2	R1505	*D2	R1612	*C3	R1832	*E1	RV113	N5		
R646	*K1	R922	*F4	R1166	*F3	R1360	*B3	R1506	*D2	R1614	*C3	R1833	*F6	RV301	L3		
R647	*N2	R923	*G4	R1167	*F3	R1361	B3	R1507	D1	R1622	*D3	R1834	*F5	RV302	L3		
R703	*K3	R924	*G4	R1168	F1	R1362	*B3	R1508	*D2	R1623	*C3	R1835	*F5	RV303	M3		
R704	*K3	R925	*G3	R1169	*F3	R1363	B1	R1509	*D2	R1626	*D3	R1836	*F5	RV304	M3		
R705	*K3	R926	*F3	R1171	*F2	R1364	*B2	R1510	C2	R1637	*D2	R1837	*F5	RV309	M4		
R706	*K3	R927	*G4	R1172	*F3	R1367	*B3	R1511	C2	R1638	*D2	R1841	F3	RV310	M4		
R707	*K3	R928	*F4	R1209	*H3	R1368	*B3	R1512	*C2	R1639	*D2	R1842	E3	RV311	M3		
R708	*K3	R929	*F4	R1210	G2	R1369	B3	R1513	*C2	R1640	*D2	R1844	*E3	RV312	M3		
R709	*K3	R930	*F4	R1211	G2	R1370	*B3	R1514	*C2	R1645	*D3	R1845	*E3	RV313	L5		
R710	*L3	R931	G5	R1212	G2	R1371	B3	R1515	C2	R1649	*C2	R1846	F3	RV503	J1		
R711	*L3	R932	*M5	R1213	*F2	R1372	*B3	R1516	C2	R1650	*C3	R1847	*E3	RV504	J1		
R712	*L3	R933	*F3	R1214	*F2	R1373	B1	R1517	C2	R1654	*D3	R1848	E3	RV506	N1		
R713	*L3	R934	G4	R1215	*G2	R1374	*B1	R1518	C2	R1680	*D2	R1849	*E3	RV703	J1		
R714	*K3	R935	*G4	R1216	*F2	R1375	B1	R1519	*D3	R1681	*D2	R1856	*G3	RV704	J1		
R715	*L3	R937	G4	R1217	*G2	R1376	*A2	R1520	*D2	R1682	*D2	R1858	*F4	RV1301	C1		
R716	*L3	R938	G4	R1219	*G2	R1377	*A2	R1521	D3	R1683	*D2	R1861	*E5	RV1501	D1		
R717	*K3	R939	*G4	R1220	*G2	R1378	B1	R1522	*D2	R1684	*D3	R1862	*E5	RV1801	G5		

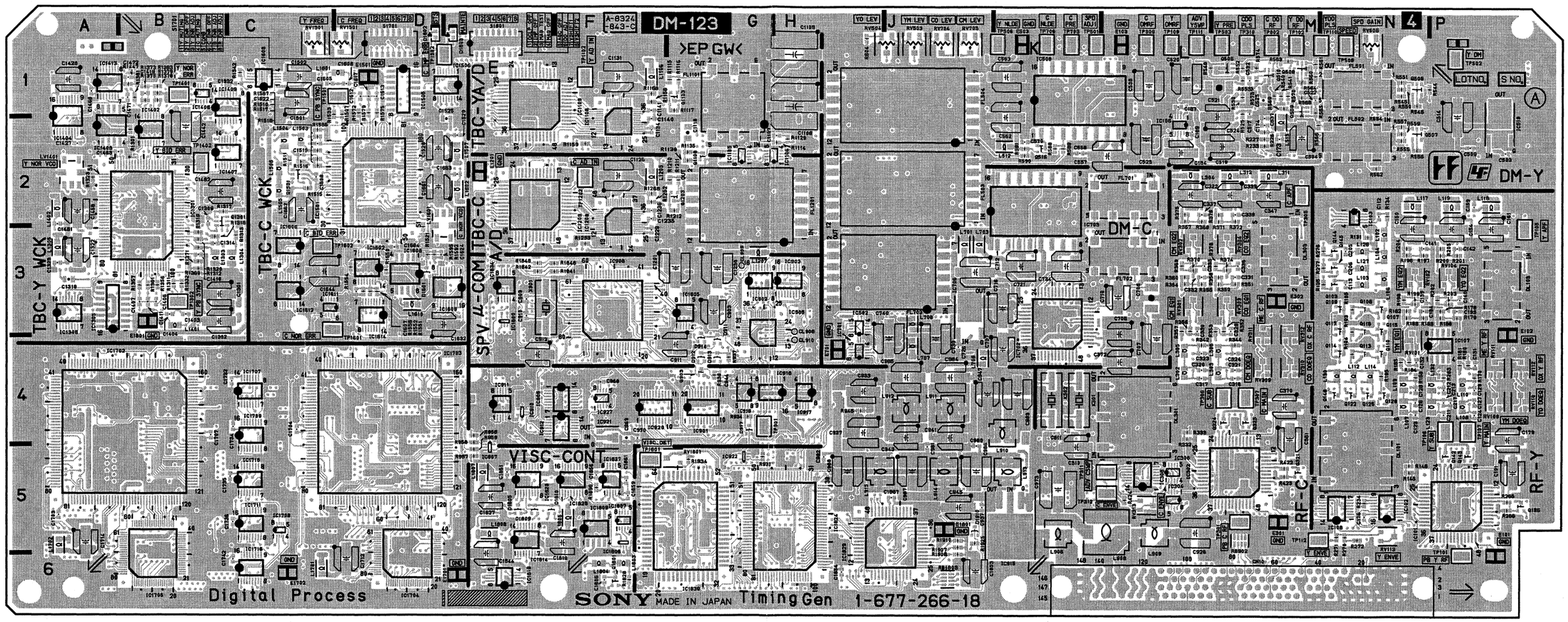

Components locations list; previous page

DM-123 -A SIDE-
SUFFIX: -18

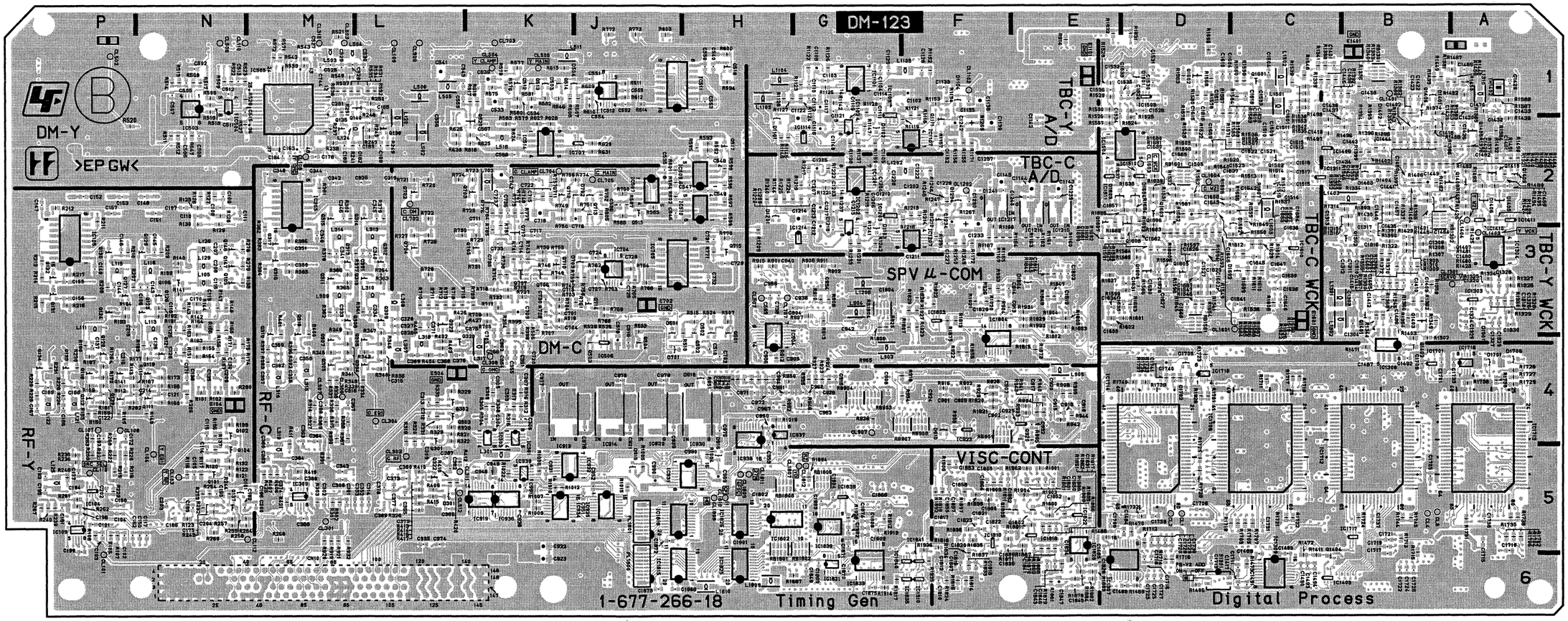

DM-123 -B SIDE-
SUFFIX: -18

DM-123 **SUFFIX: -17**

DM-123 (1-677-266-17)

C101	*P5	C193	*P5	C369	*L4	C711	*K2	C970	F4	C1304	*B3	C1489	*C6	C1681	*E3	C1862	*F5	D917	G4	IC509	*H2	IC1506	E1	L303	M4	Q111	*N4	Q715	*H3	R165	*N3	R260	*P4	R381	*M2
C102	*P5	C194	*P5	C370	M4	C712	J3	C971	*H4	C1305	*B3	C1490	*C6	C1682	*D3	C1863	*F5	D1101	*H2	IC510	*H2	IC1510	*D2	L304	L2	Q112	*P4	Q717	*K3	R166	*N3	R261	*P5	R382	*M3
C103	*P5	C195	*P5	C371	*L3	C713	*K3	C972	*H4	C1306	*B3	C1491	*C6	C1683	*D2	C1864	*F5	D1102	*G2	IC511	*H1	IC1511	*E2	L305	L4	Q113	N4	Q903	G4	R167	*N4	R262	*P5	R383	*M3
C104	*P5	C196	*M5	C372	L4	C714	*K3	C973	K5	C1308	*B3	C1492	*B4	C1684	*D2	C1865	*F5	D1103	*G3	IC512	*J1	IC1603	C1	L306	M4	Q114	N4	Q920	*E4	R168	N4	R263	*P4	R384	*M3
C105	*N5	C197	*P4	C373	*L5	C715	*K2	C974	*L5	C1309	B2	C1493	*C6	C1701	*B4	C1866	*J6	D1104	*F1	IC513	P1	IC1606	C3	L307	*L4	Q115	N3	Q1103	G1	R169	*P4	R264	*N5	R385	*M3
C106	*N3	C198	*P5	C374	*M5	C716	K3	C975	*H4	C1310	*B3	C1494	*C6	C1702	*D4	C1867	J5	D1201	*H2	IC514	*K2	IC1608	D3	L308	*L3	Q116	N3	Q1108	G2	R170	P4	R265	P5	R386	*M3
C107	*N2	C199	*P5	C375	*L3	C717	*K3	C976	*J4	C1311	*B3	C1501	C1	C1703	A5	C1868	*G5	D1204	*F2	IC701	H4	IC1609	E3	L309	*M3	Q117	N3	Q1111	*F2	R171	*N4	R266	P5	R387	*M4
C108	*N2	C200	*M5	C376	*L4	C718	*K2	C977	*K4	C1312	*C3	C1502	C1	C1704	C4	C1869	*G6	D1301	*A3	IC702	K3	IC1610	*C3	L310	*L3	Q118	*P4	Q1203	G2	R172	*P4	R267	*P5	R388	*M4
C109	*N2	C201	*M1	C377	*L5	C719	*J2	C978	*J4	C1313	*C2	C1503	*C1	C1705	*B5	C1870	*G6	D1401	*B1	IC703	K3	IC1611	C3	L311	M2	Q119	*N4	Q1210	*P2	R173	*N4	R268	*M5	R389	*M4
C110	*N2	C202	*P5	C378	*L5	C720	*K4	C979	*J4	C1314	B3	C1504	*C1	C1706	*D5	C1871	*G5	D1402	*B2	IC704	*J3	IC1612	C3	L312	M2	Q120	*P4	Q1301	B2	R174	*N4	R269	*N5	R390	*M4
C111	*N2	C203	*N5	C379	*L5	C721	K3	C980	J5	C1316	*B3	C1505	*D2	C1707	B4	C1872	*J5	D1403	*B2	IC705	*H3	IC1614	D3	L313	*L3	Q121	*N4	Q1302	*B3	R175	*N4	R270	N5	R391	*M5
C112	N2	C204	*N5	C380	*M4	C722	*K2	C981	J5	C1317	*B3	C1507	*D2	C1708	*E5	C1873	*J6	D1404	*B2	IC706	J3	IC1701	*B4	L314	*M3	Q122	N4	Q1401	*B3	R176	*P4	R271	N5	R392	*M4
C113	N3	C205	N3	C381	M4	C723	*K2	C982	H5	C1318	*A3	C1508	C2	C1709	*B4	C1874	*G5	D1405	*A2	IC707	*J2	IC1702	B4	L315	*M4	Q123	*N3	Q1402	*B4	R177	*N4	R272	N5	R393	*M4
C114	*N5	C206	N3	C382	*L5	C724	*J3	C983	K4	C1319	A3	C1509	*C2	C1710	*A5	C1875	*G6	D1406	*A2	IC901	G4	IC1703	D4	L316	*M4	Q124	*P3	Q1403	*B3	R178	P3	R276	N3	R394	*K3
C115	*N4	C207	*N3	C383	*M5	C725	*J3	C984	J4	C1320	*A3	C1510	*C2	C1711	*C6	C1901	*H5	D1501	*D1	IC902	G3	IC1704	D6	L317	*K4	Q125	N4	Q1404	*C6	R179	P3	R277	N3	R395	*K3
C116	*N3	C208	*N3	C384	*M5	C726	J4	C985	J4	C1322	A3	C1511	*C2	C1712	D6	C1902	*G5	D1502	*C2	IC903	H3	IC1705	B6	L318	*L4	Q126	*N3	Q1405	*A2	R180	P4	R278	*N3	R396	*M4
C117	*N5	C209	*N4	C385	*L5	C727	*J3	C986	J5	C1323	A3	C1512	*C2	C1713	*D6	C1903	*G5	D1601	D3	IC904	*H4	IC1706	C5	L319	*M5	Q127	*P3	Q1406	*B1	R181	P4	R279	*N3	R397	*M4
C118	*N3	C211	P4	C386	*M5	C728	*J3	C987	J5	C1324	*A3	C1513	*C2	C1714	A5	C1904	*G5	D1602	*C3	IC905	G3	IC1707	C4	L502	*L2	Q128	N4	Q1407	*A2	R182	N3	R280	*N4	R399	*K3
C119	*N3	C212	P4	C387	*L5	C729	*H3	C988	H5	C1325	*A3	C1514	*C2	C1715	*A5			D1603	*E2	IC906	E4	IC1708	*C5	L503	*M1	Q129	*N3	Q1408	*B2	R183	N3	R282	*P4	R400	*M3
C120	*N4	C213	P4	C388	*M5	C730	*K3	C989	*H5	C1326	*A3	C1515	*C2	C1716	*D6	CL1	*D5	D1604	*D2	IC907	E5	IC1709	C5	L504	*M1	Q130	*P3	Q1409	*A2	R184	N4	R283	P4	R401	*M3
C121	*N4	C214	*P4	C389	*L5	C731	*H3	C990	*J5	C1327	*A3	C1516	*C2	C1717	*B6	CL2	*D5	D1701	*A4	IC908	F3	IC1710	C5	L506	*L1	Q131	*P3	Q1410	*A2	R185	N4	R301	*M5	R402	*L4
C122	*P4	C215	*P3	C390	*M4	C732	*H3	C991	*K5	C1328	*A3	C1517	*C2	C1718	*D6	CL3	*B5	D1705	*D4	IC910	E4	IC1711	C5	L511	*K1	Q132	*P3	Q1501	C2	R186	P3	R302	*M5	R403	*L4
C123	N4	C216	*P4	C391	*L3	C733	*K3	C1102	*F1	C1329	*A3	C1518	*C2	C1719	*B5	CL4	*B5	D1706	*A4	IC911	E4	IC1712	*B5	L512	K2	Q133	*P4	Q1502	*C2	R187	*P4	R303	*M5	R404	*L4
C124	P4	C217	P4	C392	*M4	C734	K3	C1103	*G1	C1330	*A3	C1519	C2	C1720	*D5	CL101	*P6	D1802	D1	IC912	E4	IC1713	*A5	L515	M2	Q134	*P4	Q1601	*C1	R188	N3	R304	*K4	R405	*L3
C125	*N3	C301	*M5	C502	*N1	C735	*K3	C1104	*G1	C1332	C1	C1521	*C2	C1721	*B5	CL103	*N5	D1803	E1	IC913	*K4	IC1714	*D5	L516	*K2	Q135	*M2	Q1602	*D1	R189	*N4	R305	*K4	R406	*M5
C126	N4	C302	*M5	C503	P2	C736	*K2	C1105	*G2	C1401	*C1	C1522	*C2	C1722	*B6	CL104	*N5	D1804	*E3	IC914	*J4	IC1715	*D4	L701	J3	Q136	P5	Q1603	*D2	R190	*P4	R306	*M4	R407	*M5
C127	P4	C303	*K4	C504	M2	C737	K4	C1106	H1	C1402	*B2	C1523	*C2	C1723	*D6	CL106	*P4	D1805	E5	IC915	K5	IC1716	C6	L703	J3	Q137	*N5	Q1604	*D3	R191	*N3	R308	*K4	R409	*L5
C128	N4	C304	*K4	C505	*N1	C738	*H3	C1107	H2	C1403	B3	C1524	*D1	C1724	*B6	CL107	*P4	D1809	E5	IC916	G4	IC1717	*B5	L706	J4	Q138	*L2	Q1605	*D3	R192	*N3	R309	*K4	R410	*L5
C129	P4	C305	*K4	C506	*N2	C739	J4	C1108	*G1	C1404	B3	C1525	E2	C1725	*D6	CL108	*M2	D1810	E5	IC917	H4	IC1718	*A4	L707	J4	Q139	*P4	Q1606	*D2	R193	*P3	R312	*K4	R411	*M4
C130	*N4	C306	*K4	C507	*N1	C740	J4	C1109	H1	C1405	*B3	C1526	*D1	C1726	*B6	CL109	*L1	D1910	J5	IC918	H4	IC1800	E3	L708	J3	Q140	*L1	Q1607	*E2	R194	*P3	R314	*M4	R412	*L5
C131	P4	C307	*K4	C508	*N2	C744	*M1	C1110	*G1	C1406	B3	C1527	*D3	C1727	*D6	CL110	*N1			IC919	*K5	IC1802	*H5	L903	*G4	Q141	*P4	Q1608	*D2	R195	N4	R315	*M4	R413	*L5
C132	N4	C308	*M5	C509	P2	C901	*F4	C1111	*G1	C1407	B3	C1528	D2	C1728	*D5	CL112	*M5	DL101	N5	IC920	F4	IC1803	*F3	L904	*G3	Q142	P5	Q1801	F6	R196	N3	R316	*K4	R414	*L5
C133	P3	C309	*L4	C510	*H4	C902	*F4	C1112	*G1	C1408	*B2	C1529	E2	C1729	*D5	CL113	*P5	DL103	P3	IC921	F4	IC1804	*F4	L905	*E4	Q143	P5	Q1802	*E5	R197	N3	R317	*K4	R415	*L5
C134	N3	C310	K5	C511	*N2	C903	G3	C1114	*G1	C1409	*B3	C1530	*D1	C1730	*D5	CL301	*M5	DL301	L4	IC922	G5	IC1805	G3	L908	K5	Q144	N3	Q1803	*E5	R198	N3	R318	*K4	R416	*L5
C135	*N4	C311	K4	C512	*N1	C904	*H3	C1116	*G2	C1410	*B3	C1531	*D1	C1731	*C5	CL303	*L5	DL303	M3	IC923	*F4	IC1806	F5	L909	L5	Q145	N3			R199	N3	R319	*L4	R417	*L5
C136	*N4	C312	*L4	C513	*N1	C905	*H4	C1117	*G1	C1411	B3	C1532	*E1	C1732	C4	CL304	*L4			IC925	*E4	IC1807	F5	L910	K4	Q146	*N3	R101	*N4	R200	P3	R320	*L4	R418	*L5
C137	*P4	C313	*L4	C514	P1	C906	*H4	C1118	G2	C1412	*B3	C1533	*D1	C1733	*A4	CL306	*M4	E101	P6	IC927	F4	IC1809	F5	L911	J4	Q147	*N3	R102	*N4	R201	P3	R321	*L4	R419	*M5
C138	*N4	C314	*L5	C515	*N1	C907	*F4	C1119	*G1	C1413	*C2	C1534	*E1	C1734	C4	CL307	*M4	E102	P3	IC929	*J4	IC1810	*F5	L912	J4	Q148	N4	R103	N3	R202	P3	R322	*L4	R420	*L5
C139	N3	C315	*L4	C516	*J4	C908	*G4	C1121	*G1	C1414	*B3	C1535	*D1	C1735	C5	CL308	*K4	E103	L1	IC930	*H4	IC1814	E6	L913	K5	Q301	*L4	R104	N4	R203	P3	R323	*L4	R421	*M5
C140	P3	C316	*M4	C517	M1	C909	E3	C1122	*G2	C1415	*B3	C1536	*E1	C1736	C5	CL309	*L1	E104	*N4	IC931	*J5	IC1815	*H6	L914	J5	Q302	*L4	R105	N3	R204	N3	R326	*L5	R422	M5
C141	N3	C317	L4	C518	*J4	C910	E3	C1125	*G1	C1416	B3	C1601	*C1	C1737	*B5	CL310	*M1	E301	L5	IC932	*J5	IC1816	*H5	L915	H5	Q303	*L4	R106	*P5	R205	P3	R327	*M4	R423	M5
C142	P3	C318	M4	C519	M2	C911	G4	C1126	F2	C1417	*C6	C1602	*D3	C1738	*A5	CL311	*L5	E302	M3	IC934	*K5	IC1818	*E5	L1103	*F1	Q304	*L4	R107	*P5	R206	*N4	R328	*L4	R424	L5
C143	*N3	C319	*L2	C520	L1	C912	E4	C1128	*F1	C1418	*B2	C1604	*D1	C1739	*D5	CL312	*L5	E304	*L4	IC935	*J5	IC1819	E6	L1104	*H1	Q305	*M4	R108	*P5	R207	*P3	R329	*L4	R425	*M5
C144	*P3	C320	L4	C521	M1	C913	*F3	C1131	F1	C1419	B1	C1605	C1	C1740	*D4	CL502	*P1	E503	K1	IC936	*K5	IC1820	*E5	L1105	*H1	Q306	*L4	R109	*P4	R208	*P3	R330	*L4	R426	*L3
C145	*N3	C321	M4	C522	M1	C914	*F3	C1132	*F2	C1420	*A2	C1607	D3	C1741	*D4	CL503	*M1	E701	H4	IC937	*H4	IC1821	*G6	L1106	F1	Q307	*M4	R111	*P4	R209	*N3	R331	*L4	R427	*L3
C146	*P3	C322	L2	C523	L2	C915	*E4	C1133	*F1	C1421	*B2	C1608	D1	C1742	C6	CL504	*K1	E702	*J3	IC938	*H4	IC1822	*E5	L1202	*F2	Q308	*M3	R112	*P4	R210	*P3	R332	L4	R505	*N1
C147	*P2	C323	L4	C524	M1	C916	*G4	C1134	F2	C1422	*B1	C1610	*D1	C1801	*E5	CL505	*K1	E1101	*E1	IC939	*K5	IC1823	E5	L1205	F2	Q309	*L3	R113	*P4	R211	*P2	R333	L4	R506	*K3
C148	*N2	C324	M4	C525	M1	C917	*E4	C1135	*F1	C1423	*B1	C1611	*D1	C1802	*H5	CL507	*H3	E1201	E2	IC1101	*G1	IC1824	H5	L1206	*G3	Q310	*L3	R116	*N5	R212	*P2	R334	*L4	R507	*H3
C149	*P3	C325	*L2	C526	*M1	C918	*E4	C1138	*F1	C1425	*B2	C1612	D1	C1803	*E3	CL508	*N1	E1301	B3	IC1102	*G2	IC1825	*H6	L1207	G3	Q311	*M3	R117	*N5	R213	*P3	R335	*M4	R508	*N1
C150	N3	C326	*L3	C527	*M1	C919	*E4	C1139	*F2	C1426	*A2	C1613	D1	C1804	*G3	CL702	*L2	E1401	*B1	IC1103	*G1	IC1826	*H5	L1301	*C3	Q312	*L3	R120	*N5	R214	*P3	R337	*M4	R509	*N1
C151	*N2	C327	*L3	C528	*M1	C920	*E4	C1140	F2	C1427	A2	C1615	*D1	C1806	F6	CL703	*K1	E1501	D1	IC1105	G2	IC1827	F5	L1302	*C3	Q313	*M3	R121	*N5	R215	*P3	R338	*L4	R510	*H3
C152	*P2	C328	*L3	C529	*M1	C921	*J4	C1141	F1	C1428	A1	C1616	*D1	C1807	*F6	CL704	*K2	E1601	*C3	IC1106	H2	IC1828	F5	L1303	B3	Q314	*L2	R122	*N5	R216	*P3	R339	*M4	R511	*N2
C153	*P2	C329	M3	C530	*L1	C922	*K5	C1142	*E2	C1429	*A1	C1617	D1	C1808	*G5	CL705	*J2	E1701	E6	IC1107	*F2	IC1829	J5	L1304	C3	Q315	*M2	R123	*N5	R217	*P3	R340	*L4	R512	*N2
C154	P3	C330	L3	C532	M1	C923	*K5	C1143	*E2	C1430	*A1	C1618	*C1	C1809	*G5	CL707	*H3	E1702	C6	IC1108	F2	IC1830	G5	L1305	A3	Q316	*M3	R125	*N2	R218	*P5	R341	*M4	R513	*N1
C155	*P3	C331	M3	C533	*K1	C924	*F4	C1144	*E2	C1432	*A1	C1619	*C1	C1810	*F6	CL907	*G4	E1801	J5	IC1109	E1	IC1833	*G6	L1310	*A1	Q317	*M3	R126	*N2	R219	*P5	R342	L4	R514	*N1
C156	*P3	C332	L3	C534	*K1	C925	*F4	C1145	*F2	C1433	*A1	C1620	*C1	C1812	*F6	CL908	H3			IC1114	*G2	IC1834	E3	L1401	B3	Q318	*M3	R127	*N2	R220	*P5	R343	*L4	R515	*H3
C157	*P2	C333	*M3	C535	*J2	C926	*G4	C1148	*G2	C1434	*C2	C1622	C2	C1813	*E3	CL909	G3	FL501	N1	IC1201	*G2	IC1835	*G6	L1402	A2	Q319	*M3	R128	*N2	R221	*P5	R344	M4	R516	*K3
C158	*P5	C334	*L3	C536	*J2	C927	H4	C1201	G3	C1435	*B2	C1623	*D3	C1814	*E3	CL910	H4	FL502	N2	IC1202	*G3	IC1838	*G5	L1403	*B2	Q320	*L4	R129	*N2	R222	*P5	R345	*M4	R517	*N1
C159	P2	C335	L3	C537	M1	C928	L5	C1202	*F2	C1436	*B1	C1624	D3	C1816	*F6	CL1102	*F1	FL503	J2	IC1203	*G2	IC1839	*G5	L1501	*C1	Q321	M5	R130	*N2	R223	*P5	R346	*L4	R518	*N1
C160	*N5	C336	M3	C538	L1	C929	K5	C1203	*G2	C1437	*B2	C1625	*D3	C1817	*P5	CL1202	*F2	FL504	J1	IC1207	*F3			L1502	*C1	Q322	*L5	R131	N3	R224	*P4	R347	*L3	R519	*N1
C161	P3	C337	L2	C539	*K1	C930	*H5	C1204	*G2	C1438	*B1	C1626	*D3	C1818	*F6	CL1301	*A3	FL701	L2	IC1208	F2	L102	N3	L1503	C2	Q323	*L3	R132	*N5	R225	*P4	R348	*M4	R520	*P2
C162	*P5	C338	M2	C540	*H1	C931	*K5	C1205	*G2	C1439	*C1	C1627	*D3	C1819	F5	CL1401	*B1	FL702	L3	IC1209	E2	L103	N3	L1504	C2	Q324	M4	R133	*N4	R226	M2	R349	*M3	R521	*M1
C163	*M2	C339	M2	C543	*L1	C932	*E4	C1206	*G2	C1440	*B2	C1628	*D3	C1820	*F5	CL1403	*A3	FL703	J3	IC1214	*G3	L104	N3	L1505	C2	Q325	M4	R134	N2	R227	M2	R350	M3	R522	*N1
C164	*M2	C340	*L3	C546	*J2	C933	H4	C1207	*G2	C1441	*B2	C1630	*D3	C1821	*F5	CL1404	*A2	FL1101	G1	IC1215	*E2	L105	*N3	L1506	C2	Q501	*H3	R135	N3	R228	*P4	R351	M3	R523	*N1
C165	*L2	C341	*M3	C547	*H2	C934	*G3	C1209	*G2	C1442	*B2	C1631	*D3	C1822	*F5	CL1601	*C3	FL1201	G2	IC1216	*E2	L106	N3	L1507	E2	Q502	*H3	R136	*N4	R229	*P4	R352	M3	R524	*H3
C166	*P4	C342	*M2	C548	*H2	C935	*L5	C1210	*G2	C1443	*B2	C1632	E3	C1823	*F5	CL1603	*D2	FL1800	*J6	IC1217	*F2	L107	N4	L1601	D1	Q503	*J4	R137	*N5	R230	*P4	R353	M3	R525	M1
C167	*P4	C343	*M5	C549	*H2	C936	*K5	C1211	*F3	C1444	*B2	C1633	*E3	C1827	E5	CL1604	*D2	FL1801	*J5	IC1301	B2	L108	P4	L1602	E2	Q504	*J4	R138	*N3	R231	*P4	R354	L3	R526	*J3
C168	*P4	C344	*M2	C550	*H1	C937	J5	C1212	*G3	C1446	*C1	C1634	*E3	C1828	*E6	CL1807	*G5			IC1303	*A3	L109	N4	L1603	*C2	Q505	N1	R139	*N3	R233	M2	R355	L3	R527	*N2
C169	*P4	C345	*L2	C551	*J1	C938	*G3	C1213	*G2	C1449	*B2	C1635	*D3	C1829	*F3	CL1808	*H5	IC101	P5	IC1304	*A3	L110	P4	L1610	D3	Q506	M1	R140	*N3	R234	N5	R356	L3	R528	*N1
C170	*N3	C346	*M2	C552	*J1	C939	*J4	C1214	*G2	C1450	*B2	C1636	*C3	C1831	*E5	CL1809	*H5	IC102	N5	IC1305	B3	L111	*P3	L1701	C6	Q507	N2	R141	*N3	R235	*P5	R357	L3	R529	*J3
C171	*N4	C347	M2	C553	*H1	C940	*H3	C1215	*G2	C1457	*B2	C1637	*D2	C1834	*E5	CL1810	*H5	IC103	N2	IC1306	A3	L112	N4	L1702	A5	Q508	M1	R142	*N3	R236	*P5	R358	M3	R530	M1
C172	*P4	C348	*M2	C554	*J1	C941	J4	C1217	*G2	C1458	A2	C1638	*C3	C1835	*F5	CL1811	*H5	IC104	*P5	IC1307	*E6	L113	*N3	L1803	F6	Q509	M1	R143	*N3	R237	*M2	R360	L3	R531	*L1
C173	M2	C349	*M3	C555	*J1	C942	*G3	C1218	*G3	C1459	*A2	C1639	*C3	C1839	*F5	CL1812	*G5	IC105	*P3	IC1308	*B3	L114	N4	L1804	F6	Q510	M1	R144	*N3	R238	*M2	R361	*L3	R532	*L1
C174	M2	C350	*M3	C556	*L2	C943	J4	C1220	*G2	C1460	*B3	C1640	*C3	C1841	*E5			IC106	L2	IC1309	*C6	L115	*P3	L1805	F5	Q512	*K1	R145	N5	R239	*P5	R362	*M3	R533	*J3
C175	*N5	C351	*M3	C557	L2	C944	G4	C1222	*F2	C1461	A2	C1641	*C3	C1843	*E6	CN10	M6	IC107	P4	IC1310	*F6	L116	*N3	L1807	E5	Q513	*K1	R146	N5	R240	*P5	R363	*L3	R534	*L1
C176	N5	C352	*L5	C558	K2	C945	J5	C1227	*F3	C1462	B2	C1642	*C2	C1844	E6			IC108	N5	IC1311	*C2	L117	N2	L1808	E5	Q514	*K1	R147	*N3	R241	*M2	R364	*L3	R535	*M1
C177	*P5	C353	*M5	C559	*L1	C946	*K5	C1228	*F2	C1463	B2	C1643	*D2	C1845	*E6	D101	*N5	IC109	*P5	IC1402	B2	L118	P2	L1809	*H6	Q515	*J2	R148	*N3	R243	*N5	R365	*M3	R537	*M1
C178	*M2	C354	*K4	C562	K1	C947	J4	C1229	F3	C1464	*B3	C1644	C3	C1846	*E6	D301	*L5	IC301	*K4	IC1403	*C6	L119	P2	L1810	*H6	Q516	K2	R149	*N4	R244	*N5	R366	*M3	R538	*M1
C179	P4	C355	*K4	C563	K1	C949	*K5	C1230	*F2	C1468	A1	C1645	*C3	C1847	*E6	D501	*J3	IC302	M5	IC1404	A2	L120	*L2			Q517	*H2	R150	*P4	R245	*L2	R367	L2	R539	*M1
C180	*M2	C356	*M4	C565	*H3	C950	*H4	C1233	*F2	C1469	*A1	C1646	*C3	C1849	*G6	D502	*H3	IC303	*K4	IC1405	A2	L121	*P4	LV1401	A2	Q518	*H1	R151	*N4	R246	*P5	R368	L2	R540	M1
C181	*P5	C357	*M4	C567	*K2	C951	*J5	C1234	*F2	C1470	*A1	C1647	*C3	C1850	*E5	D503	*K1	IC304	L5	IC1406	*C2	L122	*P4	LV1601	D2	Q520	*K2	R153	*P4	R247	*L2	R369	L3	R541	M1
C182	*L2	C358	*M4	C568	*K2	C952	*J5	C1235	F2	C1471	B1	C1657	*E2	C1851	E5	D504	*K1	IC305	*M2	IC1407	B2	L123	P4			Q702	*L2	R154	*N4	R248	*L1	R370	L3	R542	*M1
C183	*L2	C359	*M4	C570	K2	C953	*H4	C1236	F2	C1472	B1	C1658	*D2	C1852	*E5	D701	*J4	IC306	L5	IC1408	B1	L124	*L2	Q101	*N5	Q703	*K2	R155	*N4	R249	*L2	R371	M2	R543	*M1
C184	L2	C360	*L5	C701	*K3	C961	*H4	C1237	*F2	C1480	*A2	C1659	*D2	C1853	J6	D702	*J2	IC308	L5	IC1409	B2	L125	*P5	Q102	*N4	Q704	*L3	R156	*N4	R250	*L1	R372	M2	R544	P1
C185	*N5	C361	*K4	C702	*H4	C962	*G4	C1238	G3	C1481	*A2	C1661	D2	C1854	H6	D703	*J3	IC309	*M5	IC1410	*A2	L126	N3	Q103	N3	Q705	*K3	R157	*N4	R251	*M1	R373	M3	R545	N1
C186	*N5	C362	*K3	C704	*K3	C963	*G4	C1239	*E2	C1482	*A2	C1662	C2	C1855	*P5	D910	*F4	IC502	H3	IC1411	*A2	L127	N3	Q104	*N5	Q706	*K3	R158	*N4	R252	*N5	R374	M3	R546	N1
C187	L1	C363	*M4	C705	*K3	C964	*H4	C1240	*E2	C1483	*D6	C1663	E2	C1856	F5	D911	G4	IC503	*N1	IC1413	A1	L128	*N3	Q105	*N3	Q707	*K3	R159	*P4	R253	*N5	R375	L2	R548	L1
C188	*L2	C364	*M4	C706	L3	C965	*H4	C1241	*F2	C1484	*D5	C1664	D3	C1857	*F5	D912	G4	IC504	*N1	IC1501	D2	L129	*N3	Q106	*N3	Q710	*K3	R160	*N4	R254	*N5	R376	M2	R549	*M1
C189	L2	C365	*L5	C707	L4	C966	*H3	C1242	*F2	C1485	*E5	C1665	*D2	C1858	*F5	D913	G4	IC505	*M1	IC1502	D3	L130	N4	Q107	N3	Q711	*K2	R161	*P4	R255	*N5	R377	*L3	R550	N1
C190	*N5	C366	*K4	C708	L3	C967	*H4	C1301	B3	C1486	*B3	C1666	*D3	C1859	F5	D914	G4	IC506	*J4	IC1503	*D1	L132	P4	Q108	N3	Q712	*J2	R162	*N3	R256	*P5	R378	*M3	R551	N1
C191	P5	C367	*M4	C709	*K3	C968	F4	C1302	B3	C1487	*B4	C1667	*D3	C1860	*F5	D915	*J5	IC507	*J2	IC1504	*E2	L301	*K5	Q109	N3	Q713	*J2	R163	*N3	R257	*N5	R379	*L2	R552	M1
C192	*N5	C368	*L4	C710	L3	C969	F4	C1303	*B3	C1488	*C6	C1680	*D2	C1861	F5	D916	*H5	IC508	K2	IC1505	D1	L302	L4	Q110	N4	Q714	*J3	R164	*N3	R258	*N5	R380	*M2	R553	M1

4-18 (c)

R554	N1	R724	*L2	R945	H4	R1233	*G3	R1384	*A2	R1528	*E1	R1690	*E3	R1873	*E4	TP101	P6
R555	N2	R725	*K2	R946	*G4	R1237	*G2	R1385	*A1	R1529	*E1	R1691	*E3	R1875	*F3	TP102	M1
R556	N2	R726	*L3	R947	*H4	R1240	*H2	R1386	*B2	R1530	*E1	R1692	*D3	R1878	*E6	TP105	P3
R557	N2	R727	*L3	R948	*H4	R1241	*G3	R1387	*A1	R1531	*D2	R1693	*D2	R1879	*E6	TP106	P4
R559	N2	R728	*L3	R949	*H4	R1242	*G3	R1388	*A1	R1532	*D2	R1694	*D2	R1881	*E6	TP107	P4
R560	M1	R729	*K3	R950	*H4	R1246	*F2	R1390	*B2	R1533	D1	R1695	*D2	R1882	*E6	TP109	L1
R561	M1	R730	*L3	R951	*H4	R1247	*F2	R1391	*B2	R1535	*C1	R1696	*D3	R1883	*E6	TP110	N1
R562	N2	R731	*K3	R952	*H4	R1248	*F2	R1392	*B1	R1536	*C3	R1697	*D2	R1884	*E6	TP111	L1
R563	M1	R732	*K3	R954	*G4	R1249	*F3	R1393	*B2	R1537	*C2	R1698	*D1	R1885	*E5	TP112	M5
R564	M1	R737	*K3	R955	*G4	R1250	*F3	R1394	*B2	R1538	*C1	R1699	*D2	R1886	*E5	TP301	M5
R565	M1	R738	*K3	R956	E4	R1251	*F3	R1395	*B2	R1539	*C1	R1701	*D4	R1887	*H6	TP302	M1
R566	M2	R739	*K3	R957	E5	R1252	F2	R1396	*B2	R1541	*D3	R1702	*A5	R1888	*E5	TP305	M2
R568	M1	R740	*K3	R958	E4	R1253	F3	R1397	*B2	R1542	*C1	R1703	*C5	R1889	*E5	TP306	M4
R569	M1	R741	*K3	R959	E5	R1267	*F2	R1398	*B2	R1546	*D3	R1704	*A5	R1890	*E5	TP307	M4
R570	M1	R742	*K3	R993	*E4	R1268	F2	R1399	*B2	R1547	*D3	R1705	*C5	R1891	*E5	TP309	L1
R571	*M1	R743	*K3	R994	*E4	R1269	*F2	R1401	*B2	R1548	*C1	R1706	*A5	R1892	*F5	TP310	M1
R572	*M1	R746	*K3	R995	*E4	R1301	B2	R1402	*B2	R1549	*D3	R1707	*C5	R1894	*G5	TP311	L5
R573	M1	R747	*K2	R1004	*H5	R1302	*B4	R1403	*B4	R1550	D3	R1711	*C4	R1896	F5	TP312	L5
R574	M1	R748	*K2	R1005	*J5	R1306	*B3	R1404	*B2	R1551	D3	R1712	*D5	R1897	*F5	TP501	K1
R575	*K1	R749	*K2	R1006	*K5	R1307	*B3	R1405	*D6	R1552	D3	R1713	*B5	R1898	*F5	TP502	P1
R576	*K1	R750	*K2	R1007	*K5	R1308	*B3	R1406	*B2	R1553	*C1	R1714	*D6	R1901	*E5	TP503	M1
R577	*K1	R751	*J2	R1009	*K5	R1309	*B3	R1410	*B2	R1554	D3	R1715	*B5	R1902	*E5	TP506	K1
R578	*K1	R752	*J2	R1010	*K5	R1310	*B3	R1411	*C6	R1555	*D2	R1716	*D6	R1903	*E5	TP508	N1
R579	*K1	R755	*K3	R1012	*K5	R1311	B3	R1412	*B2	R1556	D3	R1717	*C4	R1904	*E5	TP703	K1
R580	*K1	R756	*K2	R1015	*J5	R1312	B3	R1423	*A2	R1557	*E2	R1718	*C4	R1906	*F5	TP706	K1
R581	*K1	R757	*K2	R1019	*H4	R1313	C3	R1424	*A2	R1559	*C1	R1719	*D5	R1907	J5	TP901	G4
R582	*K1	R758	*J3	R1020	*F3	R1314	*B2	R1425	*A3	R1560	*C1	R1721	*C5	R1908	J6	TP1102	F1
R583	*K2	R759	*J3	R1021	*F3	R1315	*B2	R1426	*B2	R1561	*D2	R1722	*C5	R1909	*F5	TP1202	F2
R584	*J2	R760	*J2	R1022	*K5	R1316	*B2	R1427	*B2	R1562	*D2	R1723	*D4	R1910	J5	TP1302	B3
R585	*J2	R761	*J3	R1023	*F3	R1317	B2	R1428	*A2	R1563	*D1	R1724	*B5	R1911	*F5	TP1401	B1
R586	*J2	R762	*J3	R1114	H2	R1318	B3	R1429	*B3	R1564	*D3	R1725	*D5	R1912	*G5	TP1402	B2
R587	*J2	R763	*J3	R1115	G1	R1319	B3	R1435	*B2	R1565	*D3	R1726	*A4	R1913	*G5	TP1501	D1
R588	K2	R764	*J3	R1116	G1	R1320	B3	R1436	*A2	R1566	*D3	R1727	*A4	R1914	*G6	TP1502	E1
R589	K2	R765	*J3	R1117	G1	R1321	*B2	R1438	*B2	R1567	*D1	R1728	*D5	R1917	*E5	TP1601	C3
R590	K2	R766	*J3	R1118	*F1	R1322	*B3	R1439	*B1	R1568	*D1	R1729	*A4	R1925	J5	TP1602	C3
R591	K2	R767	*J3	R1119	*F2	R1323	A2	R1443	*B2	R1571	*D2	R1730	*A4	R1926	*D4	TP1801	F5
R592	*H2	R768	*J3	R1120	*G1	R1324	*A3	R1446	*A1	R1572	D1	R1731	*A5	R1927	*F3		
R593	*H2	R769	*J3	R1121	*F1	R1325	*A3	R1447	B1	R1575	D1	R1732	*D5	R1928	*G5	X301	K4
R594	*H1	R770	*H3	R1122	*G1	R1326	*A3	R1449	*B1	R1576	*D1	R1733	*D4	R1929	*E3	X302	K4
R595	*H2	R771	*H3	R1123	*G1	R1327	*A3	R1450	*A1	R1578	*D1	R1734	*D4	R1931	*E3	X901	E3
R596	*H2	R772	*J1	R1124	*G1	R1328	*A3	R1452	*A1	R1579	D1	R1735	*A5	R1933	*E3		
R597	*H2	R773	*J1	R1125	*G1	R1329	*A3	R1453	*A1	R1580	*D1	R1736	*A5	R1934	G5	*:B SIDE	
R598	*H2	R774	*J2	R1126	*G1	R1330	*A3	R1456	*B1	R1583	*D1	R1737	*D4				
R599	*H2	R775	*K2	R1127	*H1	R1331	*A1	R1467	*A1	R1584	*C1	R1738	*A4	RB901	*F4		
R600	*H1	R776	*K2	R1128	*H1	R1332	B3	R1468	*E5	R1585	*D2	R1739	*D4	RB902	M5		
R601	*J2	R777	*K2	R1129	H2	R1333	*C1	R1469	*D6	R1586	C2	R1740	*D4	RB903	*G4		
R602	*J2	R781	*K2	R1135	G2	R1334	*B2	R1470	*D5	R1587	C2	R1744	*B5	RB904	*G4		
R603	*J1	R784	*K2	R1137	*G2	R1335	*B2	R1471	*B4	R1588	*C2	R1745	*B5	RB907	*G4		
R604	H1	R785	*K3	R1138	*G2	R1336	*B1	R1472	*C6	R1590	*D3	R1801	*E5	RB908	*F4		
R607	*J1	R805	*J2	R1139	G2	R1337	*B2	R1473	*C6	R1591	*D3	R1802	*E3	RB1301	*B1		
R608	*K1	R901	*H3	R1142	*G1	R1338	*C1	R1480	*A2	R1592	D3	R1803	*E3	RB1302	*B2		
R609	*J1	R902	*F4	R1144	*H2	R1339	*C1	R1481	*A2	R1593	*D3	R1804	*E3	RB1501	*D3		
R610	*J1	R903	*E4	R1145	*H2	R1340	*C1	R1482	*B2	R1594	*D3	R1805	*E3	RB1601	*D2		
R611	*J1	R904	*F3	R1146	*H2	R1341	*C1	R1483	*A2	R1595	D3	R1807	*F3	RB1801	*H5		
R612	*J1	R905	*E4	R1147	*G2	R1342	C1	R1484	*A2	R1596	*D3	R1813	*F3	RB1802	*G5		
R613	*K1	R906	*G3	R1150	*G2	R1343	*B2	R1485	*B2	R1597	*D3	R1814	*F6	RB1803	J6		
R614	*J1	R907	*G3	R1152	*F1	R1344	*B3	R1486	*B2	R1598	*D3	R1815	*E4	RB1804	*G3		
R615	*J1	R908	*G3	R1153	*F1	R1345	*B3	R1487	*B2	R1599	*D3	R1816	*F6	RB1805	*H5		
R617	*K1	R909	*G3	R1154	*F1	R1346	*B2	R1488	*B2	R1600	*D3	R1817	*F6	RB1806	*G5		
R618	*K2	R910	*G3	R1155	*F2	R1349	*B3	R1489	*A2	R1601	*D3	R1818	*F5				
R619	*K1	R911	*G3	R1156	*F2	R1350	*B3	R1490	*A2	R1602	*E3	R1819	*F5	RV101	N4		
R624	*K2	R912	*H4	R1157	*F2	R1351	*B2	R1491	*A2	R1603	*D3	R1820	*F4	RV102	N3		
R625	*K2	R913	*G3	R1158	F1	R1352	*B2	R1492	*A2	R1605	*D2	R1821	*F4	RV104	P3		
R626	*L2	R914	*E1	R1159	F2	R1353	*B2	R1493	*A2	R1606	*D2	R1822	*F3	RV109	P4		
R627	*K2	R915	*H3	R1160	*E3	R1354	*B3	R1494	*A2	R1607	*C2	R1824	*F6	RV110	P4		
R628	*K2	R916	*F4	R1161	*E3	R1355	*B3	R1495	*A2	R1608	*C3	R1828	F6	RV111	P4		
R629	*J2	R918	*G4	R1162	*E3	R1356	B3	R1496	*B2	R1609	*C3	R1829	*F3	RV112	P4		
R630	*L2	R919	*M5	R1163	*E3	R1357	B3	R1497	*C2	R1610	*C3	R1830	*F3	RV113	N5		
R631	*J2	R920	*M5	R1164	*F3	R1358	*B3	R1498	*C2	R1611	*C3	R1831	*D1	RV301	L3		
R646	*K1	R921	*M5	R1165	*F3	R1359	*B2	R1505	*D2	R1612	*C3	R1832	*E1	RV302	L3		
R647	*N2	R922	*F4	R1166	*F3	R1360	*B3	R1506	*D2	R1614	*C3	R1833	*F6	RV303	M3		
R703	*K3	R923	*G4	R1167	*F3	R1361	B3	R1507	D1	R1622	*D3	R1834	*F5	RV304	M3		
R704	*K3	R924	*G4	R1168	F1	R1362	*B3	R1508	*D2	R1623	*C3	R1835	*F5	RV309	M4		
R705	*K3	R925	*G3	R1169	*F3	R1363	B1	R1509	*D2	R1626	*D3	R1836	*F5	RV310	M4		
R706	*K3	R926	*F3	R1171	*F2	R1364	*B2	R1510	C2	R1637	*D2	R1837	*F5	RV311	M3		
R707	*K3	R927	*G4	R1172	*F3	R1367	*B3	R1511	C2	R1638	*D2	R1841	F3	RV312	M3		
R708	*K3	R928	*F4	R1209	*H3	R1368	*B3	R1512	*C2	R1639	*D2	R1842	E3	RV313	L5		
R709	*K3	R929	*F4	R1210	G2	R1369	B3	R1513	*C2	R1640	*D2	R1844	*E3	RV503	J1		
R710	*L3	R930	*F4	R1211	G2	R1370	*B3	R1514	*C2	R1645	*D3	R1845	*E3	RV504	J1		
R711	*L3	R931	G5	R1212	G2	R1371	B3	R1515	C2	R1649	*C2	R1846	F3	RV506	N1		
R712	*L3	R932	*M5	R1213	*F2	R1372	*B3	R1516	C2	R1650	*C3	R1847	*E3	RV703	J1		
R713	*L3	R933	*F3	R1214	*F2	R1373	B1	R1517	C2	R1654	*D3	R1848	E3	RV704	J1		
R714	*K3	R934	G4	R1215	*G2	R1374	*B1	R1518	C2	R1680	*D2	R1849	*E3	RV1301	C1		
R715	*L3	R935	*G4	R1216	*F2	R1375	B1	R1519	*D3	R1681	*D2	R1856	*G3	RV1501	D1		
R716	*L3	R937	G4	R1217	*G2	R1376	*A2	R1520	*D2	R1682	*D2	R1858	*F4	RV1801	G5		
R717	*K3	R938	G4	R1219	*G2	R1377	*A2	R1521	D3	R1683	*D2	R1861	*E5				
R718	*K3	R939	*G4	R1220	*G2	R1378	B1	R1522	*D2	R1684	*D3	R1862	*E5	S1301	*D6		
R719	*K3	R940	*E4	R1221	*G2	R1379	B1	R1523	*D2	R1685	*D3	R1867	*E5	S1701	D1		
R720	*L2	R941	*E4	R1222	*G2	R1380	*B1	R1524	*D2	R1686	*D3	R1868	*E5	S1801	E1		
R721	*L2	R942	*E4	R1224	*H2	R1381	B1	R1525	*D1	R1687	*D3	R1869	*E5				
R722	*L2	R943	*E4	R1225	*H2	R1382	*B1	R1526	*E2	R1688	*D3	R1870	*E5	TH1402	*A1		
R723	*K2	R944	*E4	R1231	*G3	R1383	*A2	R1527	*E3	R1689	*E2	R1871	*F5				

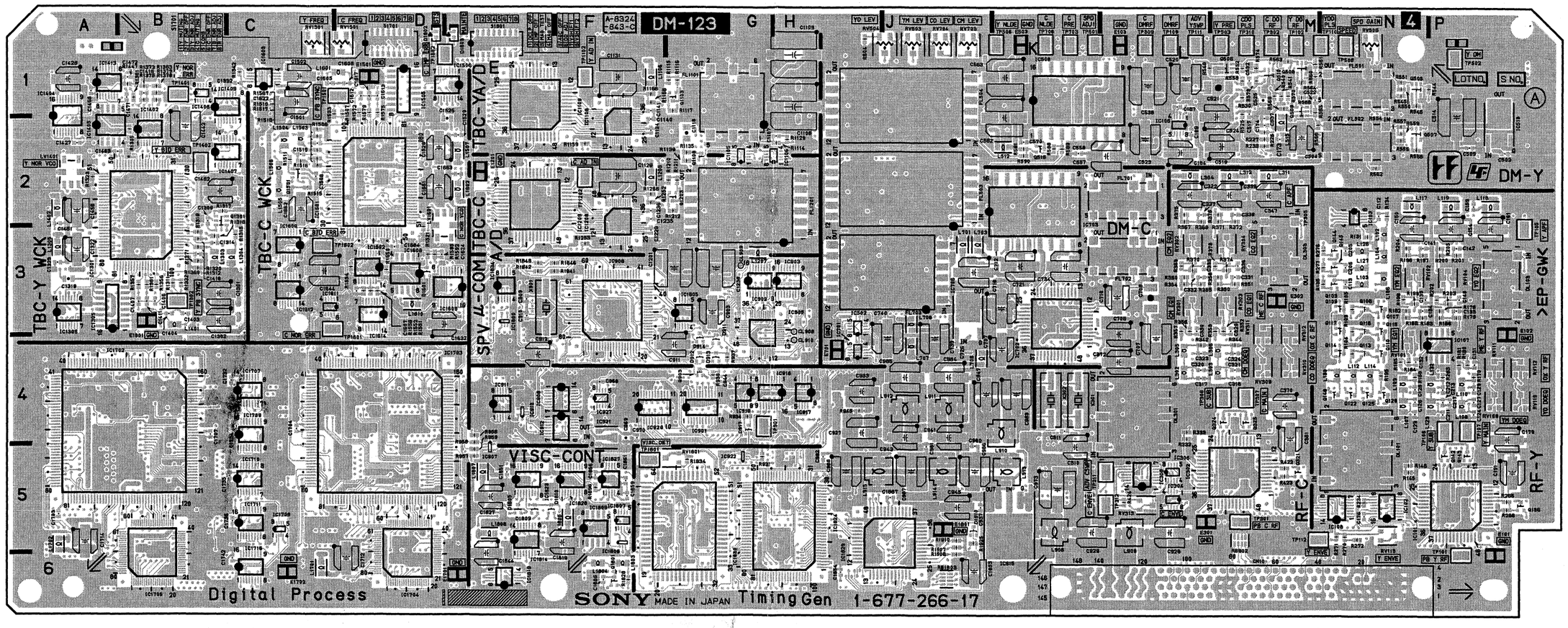

Components locations list; previous page

DM-123 -A SIDE-
SUFFIX: -17

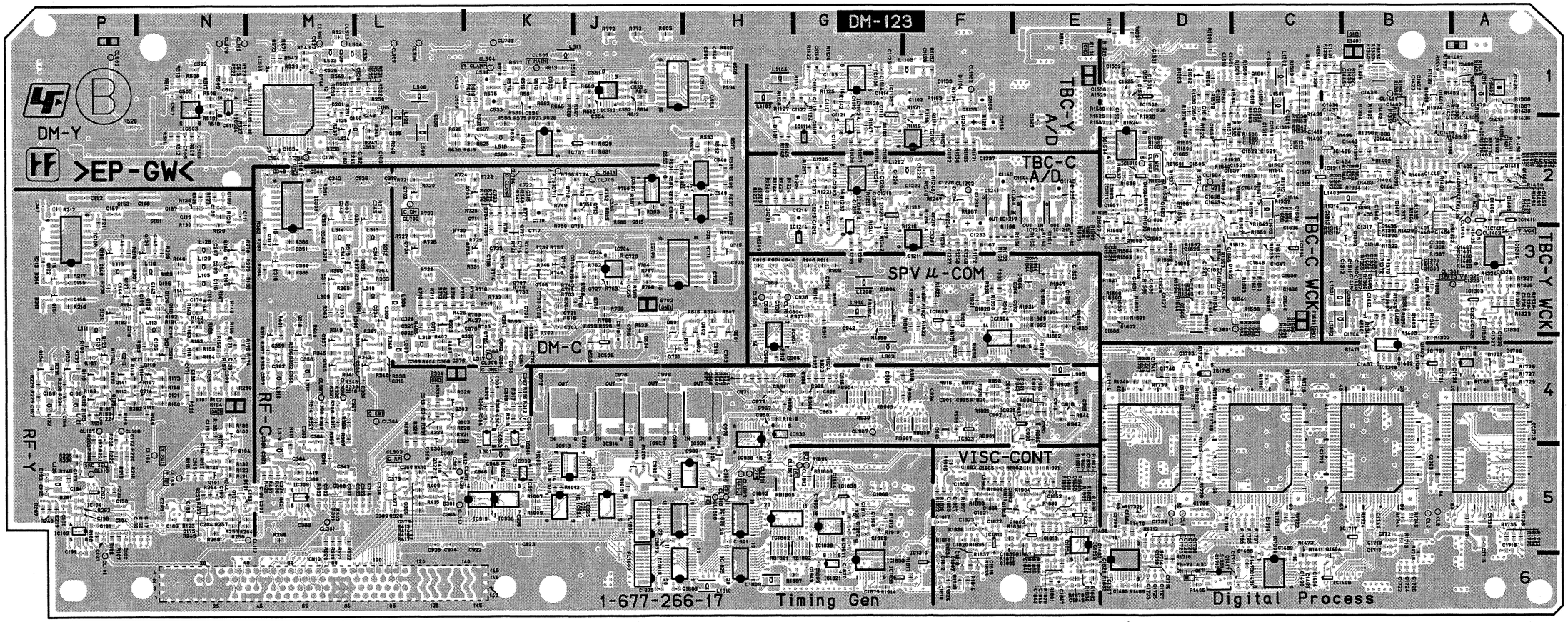

DM-123 -B SIDE-
SUFFIX: -17

DM-123 **SUFFIX: -15**

DM-123 (1-677-266-15)

C101	*P5	C193	*P5	C369	*L4	C711	*K2	C970	F4	C1305	*B3	C1491	*C6	C1701	*B4	C1868	*G5	D1201	*H2	IC514	*K2	IC1609	E3	L309	*M3	Q117	N3	Q1111	*F2	R173	*N4	R268	*M5	R389	*M4
C102	*P5	C194	*P5	C370	M4	C712	J3	C971	*H4	C1306	*B3	C1492	*B4	C1702	*D4	C1869	*G6	D1204	*F2	IC701	H4	IC1610	*C3	L310	*L3	Q118	*P4	Q1203	G2	R174	*N4	R269	*N5	R390	*M4
C103	*P5	C195	*P5	C371	*L3	C713	*K3	C972	*H4	C1308	*B3	C1501	C1	C1703	A5	C1870	*G6	D1301	*A3	IC702	K3	IC1611	C3	L311	M2	Q119	*N4	Q1210	*F2	R175	*N4	R270	N5	R391	*M5
C104	*P5	C196	*M5	C372	L4	C714	*K3	C973	K5	C1309	B2	C1502	C1	C1704	C4	C1871	*G5	D1401	*B1	IC703	K3	IC1612	C3	L312	M2	Q120	*P4	Q1301	B2	R176	*P4	R271	N5	R392	*M4
C105	*N5	C197	*P4	C373	*L5	C715	*K2	C974	*L5	C1310	*B3	C1503	*C1	C1705	*B5	C1872	*J5	D1402	*B2	IC704	*J3	IC1614	D3	L313	*L3	Q121	*N4	Q1302	*B3	R177	*N4	R272	N5	R393	*M4
C106	*N3	C198	*P5	C374	*M5	C716	K3	C975	*H4	C1311	*B3	C1504	*C1	C1706	*D5	C1873	*J6	D1403	*B2	IC705	*H3	IC1701	*B4	L314	*M3	Q122	N4	Q1401	*B3	R178	P3	R276	N3	R394	*K3
C107	*N2	C199	*P5	C375	*L3	C717	*K3	C976	*J4	C1312	*C3	C1505	*D2	C1707	B4	C1874	*G5	D1404	*B2	IC706	J3	IC1702	B4	L315	*M4	Q123	*N3	Q1403	*B3	R179	P3	R277	N3	R395	*K3
C108	*N2	C200	*M5	C376	*L4	C718	*K2	C977	*K4	C1313	*C2	C1507	*D2	C1708	*E5	C1875	*G6	D1405	*A2	IC707	*J2	IC1703	D4	L316	*M4	Q124	*P3	Q1405	*A2	R180	P4	R278	*N3	R396	*M4
C109	*N2	C201	*M1	C377	*L5	C719	*J2	C978	*J4	C1314	B3	C1508	C2	C1709	*B4	C1901	*H5	D1406	*A2	IC901	G4	IC1704	D6	L317	*K4	Q125	N4	Q1406	*B1	R181	P4	R279	*N3	R397	*M4
C110	*N2	C202	*P5	C378	*L5	C720	*K4	C979	*J4	C1316	*B3	C1509	*C2	C1710	*A5	C1902	*G5	D1501	*D1	IC902	G3	IC1705	B6	L318	*L4	Q126	*N3	Q1407	*A2	R182	N3	R280	*N4	R399	*K3
C111	*N2	C203	*N5	C379	*L5	C721	K3	C980	J5	C1317	*B3	C1510	*C2	C1711	*C6	C1903	*G5	D1502	*C2	IC903	H3	IC1706	C5	L319	*M5	Q127	*P3	Q1408	*B2	R183	N3	R282	*P4	R400	*M3
C112	N2	C204	*N5	C380	*M4	C722	*K2	C981	J5	C1318	*A3	C1511	*C2	C1712	D6	C1904	*G5	D1601	D3	IC904	*H4	IC1707	C4	L502	*L2	Q128	N4	Q1409	*A2	R184	N4	R283	P4	R401	*M3
C113	N3	C205	N3	C381	M4	C723	*K2	C982	H5	C1319	A3	C1512	*C2	C1713	*D6			D1602	*C3	IC905	G3	IC1708	*C5	L503	*M1	Q129	*N3	Q1410	*A2	R185	N4	R301	*M5	R402	*L4
C114	*N5	C206	N3	C382	*L5	C724	*J3	C983	K4	C1320	*A3	C1513	*C2	C1714	A5	CL1	*D5	D1603	*E2	IC906	E4	IC1709	C5	L504	*M1	Q130	*P3	Q1501	C2	R186	P3	R302	*M5	R403	*L4
C115	*N4	C207	*N3	C383	*M5	C725	*J3	C984	J4	C1322	A3	C1514	*C2	C1715	*A5	CL2	*D5	D1604	*D2	IC908	F3	IC1710	C5	L506	*L1	Q131	*P3	Q1502	*C2	R187	*P4	R303	*M5	R404	*L4
C116	*N3	C208	*N3	C384	*M5	C726	J4	C985	J4	C1323	A3	C1515	*C2	C1716	*D6	CL3	*B5	D1701	*A4	IC910	E4	IC1711	C5	L511	*K1	Q132	*P3	Q1601	*C1	R188	N3	R304	*K4	R405	*L3
C117	*N5	C209	*N4	C385	*L5	C727	*J3	C986	J5	C1324	*A3	C1516	*C2	C1717	*B6	CL4	*B5	D1705	*D4	IC911	E4	IC1712	*B5	L512	K2	Q133	*P4	Q1602	*D1	R189	*N4	R305	*K4	R406	*M5
C118	*N3	C211	P4	C386	*M5	C728	*J3	C987	J5	C1325	*A3	C1517	*C2	C1718	*D6	CL101	*P6	D1706	*A4	IC912	E4	IC1713	*A5	L515	M2	Q134	*P4	Q1603	*D2	R190	*P4	R306	*M4	R407	*M5
C119	*N3	C212	P4	C387	*L5	C729	*H3	C988	H5	C1326	*A3	C1518	*C2	C1719	*B5	CL103	*N5	D1802	D1	IC913	*K4	IC1714	*D5	L516	*K2	Q135	*M2	Q1604	*D3	R191	*N3	R308	*K4	R409	*L5
C120	*N4	C213	P4	C388	*M5	C730	*K3	C989	*H5	C1327	*A3	C1519	C2	C1720	*D5	CL104	*N5	D1803	E1	IC914	*J4	IC1715	*D4	L701	J3	Q136	P5	Q1605	*D3	R192	*N3	R309	*K4	R410	*L5
C121	*N4	C214	*P4	C389	*L5	C731	*H3	C990	*J5	C1328	*A3	C1521	*C2	C1721	*B5	CL106	*P4	D1804	*E3	IC915	K5	IC1716	C6	L703	J3	Q137	*N5	Q1606	*D2	R193	*P3	R312	*K4	R411	*M4
C122	*P4	C215	*P3	C390	*M4	C732	*H3	C991	*K5	C1329	*A3	C1522	*C2	C1722	*B6	CL107	*P4	D1805	E5	IC916	G4	IC1717	*B5	L706	J4	Q138	*L2	Q1607	*E2	R194	*P3	R314	*M4	R412	*L5
C123	N4	C216	*P4	C391	*L3	C733	*K3	C1102	*F1	C1330	*A3	C1523	*C2	C1723	*D6	CL108	*M2	D1809	E5	IC917	H4	IC1718	*A4	L707	J4	Q139	*P4	Q1608	*D2	R195	N4	R315	*M4	R413	*L5
C124	P4	C217	P4	C392	*M4	C734	K3	C1103	*G1	C1332	C1	C1524	*D1	C1724	*B6	CL109	*L1	D1810	E5	IC918	H4	IC1800	E3	L708	J3	Q140	*L1	Q1801	F6	R196	N3	R316	*K4	R414	*L5
C125	*N3	C301	*M5	C502	*N1	C735	*K3	C1104	*G1	C1401	*C1	C1525	E2	C1725	*D6	CL110	*N1	D1910	J5	IC919	*K5	IC1802	*H5	L903	*G4	Q141	*P4	Q1802	*E5	R197	N3	R317	*K4	R415	*L5
C126	N4	C302	*M5	C503	P2	C736	*K2	C1105	*G2	C1402	*B2	C1526	*D1	C1726	*B6	CL112	*M5			IC920	F4	IC1803	*F3	L904	*G3	Q142	P5	Q1803	*E5	R198	N3	R318	*K4	R416	*L5
C127	P4	C303	*K4	C504	M2	C737	K4	C1106	H1	C1403	B3	C1527	*D3	C1727	*D6	CL113	*P5	DL101	N5	IC921	F4	IC1804	*F4	L905	*E4	Q143	P5			R199	N3	R319	*L4	R417	*L5
C128	N4	C304	*K4	C505	*N1	C738	*H3	C1107	H2	C1404	B3	C1528	D2	C1728	*D5	CL301	*M5	DL103	P3	IC922	G5	IC1805	G3	L908	K5	Q144	N3	R101	*N4	R200	P3	R320	*L4	R418	*L5
C129	P4	C305	*K4	C506	*N2	C739	J4	C1108	*G1	C1405	*B3	C1529	E2	C1729	*D5	CL303	*L5	DL301	L4	IC923	*F4	IC1806	F5	L909	L5	Q145	N3	R102	*N4	R201	P3	R321	*L4	R419	*M5
C130	*N4	C306	*K4	C507	*N1	C740	J4	C1109	H1	C1406	B3	C1530	*D1	C1730	*D5	CL304	*L4	DL303	M3	IC925	*E4	IC1807	F5	L910	K4	Q146	*N3	R103	N3	R202	P3	R322	*L4	R420	*L5
C131	P4	C307	*K4	C508	*N2	C744	*M1	C1110	*G1	C1407	B3	C1531	*D1	C1731	*C5	CL306	*M4			IC927	F4	IC1809	F5	L911	J4	Q147	*N3	R104	N4	R203	P3	R323	*L4	R421	*M5
C132	N4	C308	*M5	C509	P2	C901	*F4	C1111	*G1	C1408	*B2	C1532	*E1	C1732	C4	CL307	*M4	E101	P6	IC929	*J4	IC1810	*F5	L912	J4	Q148	N4	R105	N3	R204	N3	R326	*L5	R422	M5
C133	P3	C309	*L4	C510	*H4	C902	*F4	C1112	*G1	C1409	*B3	C1533	*D1	C1733	*A4	CL308	*K4	E102	P3	IC930	*H4	IC1814	E6	L913	K5	Q301	*L4	R106	*P5	R205	P3	R327	*M4	R423	M5
C134	N3	C310	K5	C511	*N2	C903	G3	C1114	*G1	C1410	*B3	C1534	*E1	C1734	C4	CL309	*L1	E103	L1	IC931	*J5	IC1815	*H6	L914	J5	Q302	*L4	R107	*P5	R206	*N4	R328	*L4	R424	L5
C135	*N4	C311	K4	C512	*N1	C904	*H3	C1116	*G2	C1411	B3	C1535	*D1	C1735	C5	CL310	*M1	E104	*N4	IC932	*J5	IC1816	*H5	L915	H5	Q303	*L4	R108	*P5	R207	*P3	R329	*L4	R425	*M5
C136	*N4	C312	*L4	C513	*N1	C905	*H4	C1117	*G1	C1412	*B3	C1536	*E1	C1736	C5	CL311	*L5	E301	L5	IC934	*K5	IC1818	*E5	L1103	*F1	Q304	*L4	R109	*P4	R208	*P3	R330	*L4	R426	*L3
C137	*P4	C313	*L4	C514	P1	C906	*H4	C1118	G2	C1413	*C2	C1601	*C1	C1737	*B5	CL312	*L5	E302	M3	IC935	*J5	IC1819	E6	L1104	*H1	Q305	*M4	R111	*P4	R209	*N3	R331	*L4	R427	*L3
C138	*N4	C314	*L5	C515	*N1	C907	*F4	C1119	*G1	C1414	*B3	C1602	*D3	C1738	*A5	CL502	*P1	E304	*L4	IC936	*K5	IC1820	*E5	L1105	*H1	Q306	*L4	R112	*P4	R210	*P3	R332	L4	R505	*N1
C139	N3	C315	*L4	C516	*J4	C908	*G4	C1121	*G1	C1415	*B3	C1604	*D1	C1739	*D5	CL503	*M1	E503	K1	IC937	*H4	IC1821	*G6	L1106	F1	Q307	*M4	R113	*P4	R211	*P2	R333	L4	R506	*K3
C140	P3	C316	*M4	C517	M1	C909	E3	C1122	*G2	C1416	B3	C1605	C1	C1740	*D4	CL504	*K1	E701	H4	IC938	*H4	IC1822	*E5	L1202	*F2	Q308	*M3	R116	*N5	R212	*P2	R334	*L4	R507	*H3
C141	N3	C317	L4	C518	*J4	C910	E3	C1125	*G1	C1418	*B2	C1607	D3	C1741	*D4	CL505	*K1	E702	*J3	IC939	*K5	IC1823	E5	L1205	F2	Q309	*L3	R117	*N5	R213	*P3	R335	*M4	R508	*N1
C142	P3	C318	M4	C519	M2	C911	G4	C1126	F2	C1419	B1	C1608	D1	C1742	C6	CL507	*H3	E1101	*E1	IC1101	*G1	IC1824	H5	L1206	*G3	Q310	*L3	R120	*N5	R214	*P3	R337	*M4	R509	*N1
C143	*N3	C319	*L2	C520	L1	C912	E4	C1128	*F1	C1420	*A2	C1610	*D1	C1801	*E5	CL508	*N1	E1201	E2	IC1102	*G2	IC1825	*H6	L1207	G3	Q311	*M3	R121	*N5	R215	*P3	R338	*L4	R510	*H3
C144	*P3	C320	L4	C521	M1	C913	*F3	C1131	F1	C1421	*B2	C1611	*D1	C1802	*H5	CL702	*L2	E1301	B3	IC1103	*G1	IC1826	*H5	L1301	*C3	Q312	*L3	R122	*N5	R216	*P3	R339	*M4	R511	*N2
C145	*N3	C321	M4	C522	M1	C914	*F3	C1132	*F2	C1422	*B1	C1612	D1	C1803	*E3	CL703	*K1	E1401	*B1	IC1105	G2	IC1827	F5	L1302	*C3	Q313	*M3	R123	*N5	R217	*P3	R340	*L4	R512	*N2
C146	*P3	C322	L2	C523	L2	C915	*E4	C1133	*F1	C1423	*B1	C1613	D1	C1804	*G3	CL704	*K2	E1501	D1	IC1106	H2	IC1828	F5	L1303	B3	Q314	*L2	R125	*N2	R218	*P5	R341	*M4	R513	*N1
C147	*P2	C323	L4	C524	M1	C916	*G4	C1134	F2	C1425	*B2	C1615	*D1	C1806	F6	CL705	*J2	E1601	*C3	IC1107	*F2	IC1829	J5	L1304	C3	Q315	*M2	R126	*N2	R219	*P5	R342	L4	R514	*N1
C148	*N2	C324	M4	C525	M1	C917	*E4	C1135	*F1	C1426	*A2	C1616	*D1	C1807	*F6	CL707	*H3	E1701	E6	IC1108	F2	IC1830	G5	L1305	A3	Q316	*M3	R127	*N2	R220	*P5	R343	*L4	R515	*H3
C149	*P3	C325	*L2	C526	*M1	C918	*E4	C1138	*F2	C1427	A2	C1617	D1	C1810	*F6	CL906	*G4	E1702	C6	IC1109	E1	IC1833	*G6	L1310	*A1	Q317	*M3	R128	*N2	R221	*P5	R344	M4	R516	*K3
C150	N3	C326	*L3	C527	*M1	C919	*E4	C1139	*F2	C1428	A1	C1618	*C1	C1812	*F6	CL907	*G4	E1801	J5	IC1114	*G2	IC1834	E3	L1401	B3	Q318	*M3	R129	*N2	R222	*P5	R345	*M4	R517	*N1
C151	*N2	C327	*L3	C528	*M1	C920	*E4	C1140	F2	C1429	*A1	C1619	*C1	C1813	*E3	CL908	H3			IC1201	*G2	IC1835	*G6	L1402	A2	Q319	*M3	R130	*N2	R223	*P5	R346	*L4	R518	*N1
C152	*P2	C328	*L3	C529	*M1	C921	*J4	C1141	F1	C1430	*A1	C1620	*C1	C1814	*E3	CL909	G3	FL501	N1	IC1202	*G3	IC1838	*G5	L1403	*B2	Q320	*L4	R131	N3	R224	*P4	R347	*L3	R519	*N1
C153	*P2	C329	M3	C530	*L1	C922	*K5	C1142	*E2	C1432	*A1	C1622	C2	C1816	*F6	CL910	H4	FL502	N2	IC1203	*G2	IC1839	*G5	L1501	*C1	Q321	M5	R132	*N5	R225	*P4	R348	*M4	R520	*P2
C154	P3	C330	L3	C532	M1	C923	*K5	C1143	*E2	C1433	*A1	C1623	*D3	C1817	*F5	CL1102	*F1	FL503	J2	IC1207	*F3			L1502	*C1	Q322	*L5	R133	*N4	R226	M2	R349	*M3	R521	*M1
C155	*P3	C331	M3	C533	*K1	C924	*F4	C1144	*E2	C1434	*C2	C1624	D3	C1818	*F6	CL1202	*F2	FL504	J1	IC1208	F2	L102	N3	L1503	C2	Q323	*L3	R134	N2	R227	M2	R350	M3	R522	*N1
C156	*P3	C332	L3	C534	*K1	C925	*F4	C1145	*F2	C1435	*B2	C1625	*D3	C1819	F5	CL1301	*A3	FL701	L2	IC1209	E2	L103	N3	L1504	C2	Q324	M4	R135	N3	R228	*P4	R351	M3	R523	*N1
C157	*P2	C333	*M3	C535	*J2	C926	*G4	C1148	*G2	C1436	*B1	C1626	*D3	C1820	*F5	CL1401	*B1	FL702	L3	IC1214	*G3	L104	N3	L1505	C2	Q325	M4	R136	*N4	R229	*P4	R352	M3	R524	*H3
C158	*P5	C334	*L3	C536	*J2	C927	H4	C1201	G3	C1437	*B2	C1627	*D3	C1821	*F5	CL1403	*A3	FL703	J3	IC1215	*E2	L105	*N3	L1506	C2	Q501	*H3	R137	*N5	R230	*P4	R353	M3	R525	M1
C159	P2	C335	L3	C537	M1	C928	L5	C1202	*F2	C1438	*B1	C1628	*D3	C1822	*F5	CL1404	*A2	FL1101	G1	IC1216	*E2	L106	N3	L1507	E2	Q502	*H3	R138	*N3	R231	*P4	R354	L3	R526	*J3
C160	*N5	C336	M3	C538	L1	C929	K5	C1203	*G2	C1439	*C1	C1630	*D3	C1823	*F5	CL1601	*C3	FL1201	G2	IC1217	*F2	L107	N4	L1601	D1	Q503	*J4	R139	*N3	R233	M2	R355	L3	R527	*N2
C161	P3	C337	L2	C539	*K1	C930	*H5	C1204	*G2	C1440	*B2	C1631	*D3	C1827	E5	CL1603	*D2	FL1800	*J6	IC1301	B2	L108	P4	L1602	E2	Q504	*J4	R140	*N3	R234	N5	R356	L3	R528	*N1
C162	*P5	C338	M2	C540	*H1	C931	*K5	C1205	*G2	C1441	*B2	C1632	E3	C1828	*E6	CL1604	*D2	FL1801	*J5	IC1303	*A3	L109	N4	L1603	*C2	Q505	N1	R141	*N3	R235	*P5	R357	L3	R529	*J3
C163	*M2	C339	M2	C543	*L1	C932	*E4	C1206	*G2	C1442	B2	C1633	*E3	C1829	*F3	CL1807	*G5			IC1304	*A3	L110	P4	L1610	D3	Q506	M1	R142	*N3	R236	*P5	R358	M3	R530	M1
C164	*M2	C340	*L3	C546	*J2	C933	H4	C1207	*G2	C1443	*B2	C1634	*E3	C1831	*E5	CL1808	*H5	IC101	P5	IC1305	B3	L111	*P3	L1701	C6	Q507	N2	R143	*N3	R237	*M2	R360	L3	R531	*L1
C165	*L2	C341	*M3	C547	*H2	C934	*G3	C1209	*G2	C1444	*B2	C1635	*D3	C1834	*E5	CL1809	*H5	IC102	N5	IC1306	A3	L112	N4	L1702	A5	Q508	M1	R144	*N3	R238	*M2	R361	*L3	R532	*L1
C166	*P4	C342	*M2	C548	*H2	C935	*L5	C1210	*G2	C1446	*C1	C1636	*C3	C1835	*F5	CL1810	*H5	IC103	N2	IC1307	*E6	L113	*N3	L1803	F6	Q509	M1	R145	N5	R239	*P5	R362	*M3	R533	*J3
C167	*P4	C343	*M5	C549	*H2	C936	*K5	C1211	*F3	C1449	*B2	C1637	*D2	C1839	*F5	CL1811	*H5	IC104	*P5	IC1308	*B3	L114	N4	L1804	F6	Q510	M1	R146	N5	R240	*P5	R363	*L3	R534	*L1
C168	*P4	C344	*M2	C550	*H1	C937	J5	C1212	*G3	C1450	*B2	C1638	*C3	C1841	*E5	CL1812	*G5	IC105	*P3	IC1309	*C6	L115	*P3	L1805	F5	Q512	*K1	R147	*N3	R241	*M2	R364	*L3	R535	*M1
C169	*P4	C345	*L2	C551	*J1	C938	*G3	C1213	*G2	C1457	*B2	C1639	*C3	C1843	*E6			IC106	L2	IC1310	*F6	L116	*N3	L1807	E5	Q513	*K1	R148	*N3	R243	*N5	R365	*M3	R537	*M1
C170	*N3	C346	*M2	C552	*J1	C939	*J4	C1214	*G2	C1458	A2	C1640	*C3	C1844	E6	CN10	M6	IC107	P4	IC1311	*C2	L117	N2	L1808	E5	Q514	*K1	R149	*N4	R244	*N5	R366	*M3	R538	*M1
C171	*N4	C347	M2	C553	*H1	C940	*H3	C1215	*G2	C1459	*A2	C1641	*C3	C1845	*E6			IC108	N5	IC1312	*F6	L118	P2	L1809	*H6	Q515	*J2	R150	*P4	R245	*L2	R367	L2	R539	*M1
C172	*P4	C348	*M2	C554	*J1	C941	J4	C1217	*G2	C1460	*B3	C1642	*C2	C1846	*E6	D101	*N5	IC109	*P5	IC1402	B2	L119	P2	L1810	*H6	Q516	K2	R151	*N4	R246	*P5	R368	L2	R540	M1
C173	M2	C349	*M3	C555	*J1	C942	*G3	C1218	*G3	C1461	A2	C1643	*D2	C1847	*E6	D301	*L5	IC301	*K4	IC1404	A2	L120	*L2			Q517	*H2	R153	*P4	R247	*L2	R369	L3	R541	M1
C174	M2	C350	*M3	C556	*L2	C943	J4	C1220	*G2	C1462	B2	C1644	C3	C1849	*G6	D501	*J3	IC302	M5	IC1405	A2	L121	*P4	LV1401	A2	Q518	*H1	R154	*N4	R248	*L1	R370	L3	R542	*M1
C175	*N5	C351	*M3	C557	L2	C944	G4	C1222	*F2	C1463	B2	C1645	*C3	C1850	*E5	D502	*H3	IC303	*K4	IC1406	*C2	L122	*P4	LV1601	D2	Q520	*K2	R155	*N4	R249	*L2	R371	M2	R543	*M1
C176	N5	C352	*L5	C558	K2	C945	J5	C1227	*F3	C1464	*B3	C1646	*C3	C1851	E5	D503	*K1	IC304	L5	IC1407	B2	L123	P4			Q702	*L2	R156	*N4	R250	*L1	R372	M2	R544	P1
C177	*P5	C353	*M5	C559	*L1	C946	*K5	C1228	*F2	C1468	A1	C1647	*C3	C1852	*E5	D504	*K1	IC305	*M2	IC1408	B1	L124	*L2	Q101	*N5	Q703	*K2	R157	*N4	R251	*M1	R373	M3	R545	N1
C178	*M2	C354	*K4	C562	K1	C947	J4	C1229	F3	C1469	*A1	C1657	*E2	C1853	J6	D701	*J4	IC306	L5	IC1409	B2	L125	*P5	Q102	*N4	Q704	*L3	R158	*N4	R252	*N5	R374	M3	R546	N1
C179	P4	C355	*K4	C563	K1	C949	*K5	C1230	*F2	C1470	*A1	C1658	*D2	C1854	H6	D702	*J2	IC308	L5	IC1410	*A2	L126	N3	Q103	N3	Q705	*K3	R159	*P4	R253	*N5	R375	L2	R548	L1
C180	*M2	C356	*M4	C565	*H3	C950	*H4	C1233	*F2	C1471	B1	C1659	*D2	C1855	*F5	D703	*J3	IC309	*M5	IC1411	*A2	L127	N3	Q104	*N5	Q706	*K3	R160	*N4	R254	*N5	R376	M2	R549	*M1
C181	*P5	C357	*M4	C567	*K2	C951	*J5	C1234	*F2	C1472	B1	C1661	D2	C1856	F5	D910	*F4	IC502	H3	IC1413	A1	L128	*N3	Q105	*N3	Q707	*K3	R161	*P4	R255	*N5	R377	*L3	R550	N1
C182	*L2	C358	*M4	C568	*K2	C952	*J5	C1235	F2	C1480	*A2	C1662	C2	C1857	*F5	D911	G4	IC503	*N1	IC1501	D2	L129	*N3	Q106	*N3	Q710	*K3	R162	*N3	R256	*P5	R378	*M3	R551	N1
C183	*L2	C359	*M4	C570	K2	C953	*H4	C1236	F2	C1481	*A2	C1663	E2	C1858	*F5	D912	G4	IC504	*N1	IC1502	D3	L130	N4	Q107	N3	Q711	*K2	R163	*N3	R257	*N5	R379	*L2	R552	M1
C184	L2	C360	*L5	C701	*K3	C961	*H4	C1237	*F2	C1482	*A2	C1664	D3	C1859	F5	D913	G4	IC505	*M1	IC1503	*D1	L132	P4	Q108	N3	Q712	*J2	R164	*N3	R258	*N5	R380	*M2	R553	M1
C185	*N5	C361	*K4	C702	*H4	C962	*G4	C1238	G3	C1483	*D6	C1665	*D2	C1860	*F5	D914	G4	IC506	*J4	IC1504	*E2	L301	*K5	Q109	N3	Q713	*J2	R165	*N3	R260	*P4	R381	*M2	R554	N1
C186	*N5	C362	*K3	C704	*K3	C963	*G4	C1239	*E2	C1484	*D5	C1666	*D3	C1861	F5	D915	*J5	IC507	*J2	IC1505	D1	L302	L4	Q110	N4	Q714	*J3	R166	*N3	R261	*P5	R382	*M3	R555	N2
C187	L1	C363	*M4	C705	*K3	C964	*H4	C1240	*E2	C1485	*E5	C1667	*D3	C1862	*F5	D916	*H5	IC508	K2	IC1506	E1	L303	M4	Q111	*N4	Q715	*H3	R167	*N4	R262	*P5	R383	*M3	R556	N2
C188	*L2	C364	*M4	C706	L3	C965	*H4	C1241	*F2	C1486	*B3	C1680	*D2	C1863	*F5	D917	G4	IC509	*H2	IC1510	*D2	L304	L2	Q112	*P4	Q717	*K3	R168	N4	R263	*P4	R384	*M3	R557	N2
C189	L2	C365	*L5	C707	L4	C966	*H3	C1301	B3	C1487	*B4	C1681	*E3	C1864	*F5	D1101	*H2	IC510	*H2	IC1511	*E2	L305	L4	Q113	N4	Q903	G4	R169	*P4	R264	*N5	R385	*M3	R559	N2
C190	*N5	C366	*K4	C708	L3	C967	*H4	C1302	B3	C1488	*C6	C1682	*D3	C1865	*F5	D1102	*G2	IC511	*H1	IC1603	C1	L306	M4	Q114	N4	Q920	*E4	R170	P4	R265	P5	R386	*M3	R560	M1
C191	P5	C367	*M4	C709	*K3	C968	F4	C1303	*B3	C1489	*C6	C1683	*D2	C1866	*J6	D1103	*G3	IC512	*J1	IC1606	C3	L307	*L4	Q115	N3	Q1103	G1	R171	*N4	R266	P5	R387	*M4	R561	M1
C192	*N5	C368	*L4	C710	L3	C969	F4	C1304	*B3	C1490	*C6	C1684	*D2	C1867	J5	D1104	*F1	IC513	P1	IC1608	D3	L308	*L3	Q116	N3	Q1108	G2	R172	*P4	R267	*P5	R388	*M4	R562	N2

4-18 (b)

R563	M1	R732	*K3	R952	*H4	R1252	F2	R1399	*B2	R1550	D3	R1711	*C4	R1896	F5	TP501	K1		
R564	M1	R737	*K3	R954	*G4	R1253	F3	R1401	*B2	R1551	D3	R1712	*D5	R1897	*F5	TP502	P1		
R565	M1	R738	*K3	R955	*G4	R1268	F2	R1402	*B2	R1552	D3	R1713	*B5	R1898	*F5	TP503	M1		
R566	M2	R739	*K3	R993	*E4	R1301	B2	R1404	*B2	R1553	*C1	R1714	*D6	R1901	*E5	TP506	K1		
R568	M1	R740	*K3	R994	*E4	R1306	*B3	R1406	*B2	R1554	D3	R1715	*B5	R1902	*E5	TP508	N1		
R569	M1	R741	*K3	R995	*E4	R1307	*B3	R1410	*B2	R1555	*D2	R1716	*D6	R1903	*E5	TP703	K1		
R570	M1	R742	*K3	R1004	*H5	R1308	*B3	R1412	*B2	R1556	D3	R1717	*C4	R1904	*E5	TP706	K1		
R571	*M1	R743	*K3	R1005	*J5	R1309	*B3	R1423	*A2	R1557	*E2	R1718	*C4	R1906	*F5	TP901	G4		
R572	*M1	R746	*K3	R1006	*K5	R1310	*B3	R1424	*A2	R1559	*C1	R1719	*D5	R1907	J5	TP1102	F1		
R573	M1	R747	*K2	R1007	*K5	R1311	B3	R1425	*A3	R1560	*C1	R1721	*C5	R1908	J6	TP1202	F2		
R574	M1	R748	*K2	R1009	*K5	R1312	B3	R1426	*B2	R1561	*D2	R1722	*C5	R1909	*F5	TP1302	B3		
R575	*K1	R749	*K2	R1010	*K5	R1313	C3	R1427	*B2	R1562	*D2	R1723	*D4	R1910	J5	TP1401	B1		
R576	*K1	R750	*K2	R1012	*K5	R1314	*B2	R1428	*A2	R1563	*D1	R1724	*B5	R1911	*F5	TP1402	B2		
R577	*K1	R751	*J2	R1015	*J5	R1315	*B2	R1429	*B3	R1564	*D3	R1725	*D5	R1912	*G5	TP1501	D1		
R578	*K1	R752	*J2	R1019	*H4	R1316	*B2	R1435	*B2	R1565	*D3	R1726	*A4	R1913	*G5	TP1502	E1		
R579	*K1	R755	*K3	R1020	*F3	R1317	B2	R1436	*A2	R1566	*D3	R1727	*A4	R1914	*G6	TP1601	C3		
R580	*K1	R756	*K2	R1021	*F3	R1318	B3	R1438	*B2	R1567	*D1	R1728	*D5	R1917	*E5	TP1602	C3		
R581	*K1	R757	*K2	R1022	*K5	R1319	B3	R1439	*B1	R1568	*D1	R1729	*A4	R1925	J5	TP1801	F5		
R582	*K1	R758	*J3	R1023	*F3	R1320	B3	R1443	*B2	R1571	*D2	R1730	*A4	R1926	*D4				
R583	*K2	R759	*J3	R1114	H2	R1321	*B2	R1446	*A1	R1572	D1	R1731	*A5	R1927	*F3	X301	K4		
R584	*J2	R760	*J2	R1115	G1	R1322	*B3	R1447	B1	R1575	D1	R1732	*D5	R1928	*G5	X302	K4		
R585	*J2	R761	*J3	R1116	G1	R1323	A2	R1449	*B1	R1576	*D1	R1733	*D4	R1929	*E3	X901	E3		
R586	*J2	R762	*J3	R1117	G1	R1324	*A3	R1450	*A1	R1578	*D1	R1734	*D4	R1931	*E3				
R587	*J2	R763	*J3	R1118	*F1	R1325	*A3	R1452	*A1	R1579	D1	R1735	*A5	R1933	*E3	*:B SIDE			
R588	K2	R764	*J3	R1119	*F2	R1326	*A3	R1453	*A1	R1580	*D1	R1736	*A5	R1934	G5				
R589	K2	R765	*J3	R1120	*G1	R1327	*A3	R1456	*B1	R1583	*D1	R1737	*D4						
R590	K2	R766	*J3	R1121	*F1	R1328	*A3	R1467	*A1	R1584	*C1	R1738	*A4	RB901	*F4				
R591	K2	R767	*J3	R1122	*G1	R1329	*A3	R1468	*E5	R1585	*D2	R1739	*D4	RB902	M5				
R592	*H2	R768	*J3	R1123	*G1	R1330	*A3	R1469	*D6	R1586	C2	R1740	*D4	RB903	*G4				
R593	*H2	R769	*J3	R1124	*G1	R1331	*A1	R1470	*D5	R1587	C2	R1744	*B5	RB904	*G4				
R594	*H1	R770	*H3	R1125	*G1	R1332	B3	R1471	*B4	R1588	*C2	R1745	*B5	RB907	*G4				
R595	*H2	R771	*H3	R1126	*G1	R1333	*C1	R1472	*C6	R1590	*D3	R1801	*E5	RB908	*F4				
R596	*H2	R772	*J1	R1127	*H1	R1334	*B2	R1473	*C6	R1591	*D3	R1802	*E3	RB1301	*B1				
R597	*H2	R773	*J1	R1128	*H1	R1335	*B2	R1480	*A2	R1592	D3	R1803	*E3	RB1302	*B2				
R598	*H2	R774	*J2	R1129	H2	R1336	*B1	R1481	*A2	R1593	*D3	R1804	*E3	RB1501	*D3				
R599	*H2	R775	*K2	R1135	G2	R1337	*B2	R1482	*B2	R1594	*D3	R1805	*E3	RB1601	*D2				
R600	*H1	R776	*K2	R1137	*G2	R1338	*C1	R1483	*A2	R1595	D3	R1807	*F3	RB1801	*H5				
R601	*J2	R777	*K2	R1138	*G2	R1339	*C1	R1484	*A2	R1596	*D3	R1813	*F3	RB1802	*G5				
R602	*J2	R781	*K2	R1139	G2	R1340	*C1	R1485	*B2	R1597	*D3	R1814	*F6	RB1803	J6				
R603	*J1	R784	*K2	R1142	*G1	R1341	*C1	R1486	*B2	R1598	*D3	R1815	*E4	RB1804	*G3				
R604	H1	R785	*K3	R1144	*H2	R1342	C1	R1487	*B2	R1599	*D3	R1816	*F6	RB1805	*H5				
R607	*J1	R805	*J2	R1145	*H2	R1343	*B2	R1488	*B2	R1600	*D3	R1817	*F6	RB1806	*G5				
R608	*K1	R901	*H3	R1146	*H2	R1344	*B3	R1489	*A2	R1601	*D3	R1818	*F5						
R609	*J1	R902	*F4	R1147	*G2	R1345	*B3	R1490	*A2	R1602	*E3	R1819	*F5	RV101	N4				
R610	*J1	R903	*E4	R1150	*G2	R1346	*B2	R1491	*A2	R1603	*D3	R1820	*F4	RV102	N3				
R611	*J1	R904	*F3	R1152	*F1	R1349	*B3	R1492	*A2	R1605	*D2	R1821	*F4	RV104	P3				
R612	*J1	R905	*E4	R1153	*F1	R1350	*B3	R1493	*A2	R1606	*D2	R1822	*F3	RV109	P4				
R613	*K1	R906	*G3	R1154	*F1	R1351	*B2	R1494	*A2	R1607	*C2	R1824	*F6	RV110	P4				
R614	*J1	R907	*G3	R1155	*F2	R1352	*B2	R1495	*A2	R1608	*C3	R1828	F6	RV111	P4				
R615	*J1	R908	*G3	R1156	*F2	R1353	*B2	R1496	*B2	R1609	*C3	R1829	*F3	RV112	P4				
R617	*K1	R909	*G3	R1157	*F2	R1354	*B3	R1497	*C2	R1610	*C3	R1830	*F3	RV113	N5				
R618	*K2	R910	*G3	R1158	F1	R1355	*B3	R1498	*C2	R1611	*C3	R1831	*D1	RV301	L3				
R619	*K1	R911	*G3	R1159	F2	R1356	B3	R1505	*D2	R1612	*C3	R1832	*E1	RV302	L3				
R624	*K2	R912	*H4	R1160	*E3	R1357	B3	R1506	*D2	R1614	*C3	R1833	*F6	RV303	M3				
R625	*K2	R913	*G3	R1161	*E3	R1358	*B3	R1507	D1	R1622	*D3	R1834	*F5	RV304	M3				
R626	*L2	R914	*E1	R1162	*E3	R1359	*B2	R1508	*D2	R1623	*C3	R1835	*F5	RV309	M4				
R627	*K2	R915	*H3	R1163	*E3	R1360	*B3	R1509	*D2	R1626	*D3	R1836	*F5	RV310	M4				
R628	*K2	R916	*F4	R1164	*F3	R1361	B3	R1510	C2	R1637	*D2	R1837	*F5	RV311	M3				
R629	*J2	R918	*G4	R1165	*F3	R1362	*B3	R1511	C2	R1638	*D2	R1841	F3	RV312	M3				
R630	*L2	R919	*M5	R1166	*F3	R1363	B1	R1512	*C2	R1639	*D2	R1842	E3	RV313	L5				
R631	*J2	R920	*M5	R1167	*F3	R1364	*B2	R1513	*C2	R1640	*D2	R1844	*E3	RV503	J1				
R646	*K1	R921	*M5	R1168	F1	R1367	*B3	R1514	*C2	R1645	*D3	R1845	*E3	RV504	J1				
R647	*N2	R922	*F4	R1169	*F3	R1368	*B3	R1515	C2	R1649	*C2	R1846	F3	RV506	N1				
R703	*K3	R923	*G4	R1171	*F2	R1369	B3	R1516	C2	R1650	*C3	R1847	*E3	RV703	J1				
R704	*K3	R924	*G4	R1172	*F3	R1370	*B3	R1517	C2	R1654	*D3	R1848	E3	RV704	J1				
R705	*K3	R925	*G3	R1209	*H3	R1371	B3	R1518	C2	R1680	*D2	R1849	*E3	RV1301	C1				
R706	*K3	R926	*F3	R1210	G2	R1372	*B3	R1519	*D3	R1681	*D2	R1856	*G3	RV1501	D1				
R707	*K3	R927	*G4	R1211	G2	R1373	B1	R1520	*D2	R1682	*D2	R1858	*F4	RV1801	G5				
R708	*K3	R928	*F4	R1212	G2	R1374	*B1	R1521	D3	R1683	*D2	R1861	*E5						
R709	*K3	R929	*F4	R1213	*F2	R1375	B1	R1522	*D2	R1684	*D3	R1862	*E5	S1701	D1				
R710	*L3	R930	*F4	R1214	*F2	R1376	*A2	R1523	*D2	R1685	*D3	R1867	*E5	S1801	E1				
R711	*L3	R931	G5	R1215	*G2	R1377	*A2	R1524	*D2	R1686	*D3	R1868	*E5						
R712	*L3	R932	*M5	R1216	*F2	R1378	B1	R1525	*D1	R1687	*D3	R1869	*E5	TH1402	*A1				
R713	*L3	R933	*F3	R1217	*G2	R1379	B1	R1526	*E2	R1688	*D3	R1870	*E5						
R714	*K3	R934	G4	R1219	*G2	R1380	*B1	R1527	*E3	R1689	*E2	R1871	*F5	TP101	P6				
R715	*L3	R935	*G4	R1220	*G2	R1381	B1	R1528	*E1	R1690	*E3	R1873	*E4	TP102	M1				
R716	*L3	R936	*G4	R1221	*G2	R1382	*B1	R1529	*E1	R1691	*E3	R1875	*F3	TP105	P3				
R717	*K3	R937	G4	R1222	*G2	R1383	*A2	R1530	*E1	R1692	*D3	R1878	*E6	TP106	P4				
R718	*K3	R938	G4	R1224	*H2	R1384	*A2	R1531	*D2	R1693	*D2	R1879	*E6	TP107	P4				
R719	*K3	R939	*G4	R1225	*H2	R1385	*A1	R1532	*D2	R1694	*D2	R1881	*E6	TP109	L1				
R720	*L2	R940	*E4	R1231	*G3	R1386	*B2	R1533	D1	R1695	*D2	R1882	*E6	TP110	N1				
R721	*L2	R941	*E4	R1233	*G3	R1387	*A1	R1535	*C1	R1696	*D3	R1883	*E6	TP111	L1				
R722	*L2	R942	*E4	R1237	*G2	R1388	*A1	R1536	*C3	R1697	*D2	R1884	*E6	TP112	M5				
R723	*K2	R943	*E4	R1240	*H2	R1390	*B2	R1537	*C2	R1698	*D1	R1885	*E5	TP301	M5				
R724	*L2	R944	*E4	R1241	*G3	R1391	*B2	R1538	*C1	R1699	*D2	R1886	*E5	TP302	M1				
R725	*K2	R945	H4	R1242	*G3	R1392	*B1	R1539	*C1	R1701	*D4	R1887	*H6	TP305	M2				
R726	*L3	R946	*G4	R1246	*F2	R1393	*B2	R1541	*D3	R1702	*A5	R1888	*E5	TP306	M4				
R727	*L3	R947	*H4	R1247	*F2	R1394	*B2	R1542	*C1	R1703	*C5	R1889	*E5	TP307	M4				
R728	*L3	R948	*H4	R1248	*F2	R1395	*B2	R1546	*D3	R1704	*A5	R1890	*E5	TP309	L1				
R729	*K3	R949	*H4	R1249	*F3	R1396	*B2	R1547	*D3	R1705	*C5	R1891	*E5	TP310	M1				
R730	*L3	R950	*H4	R1250	*F3	R1397	*B2	R1548	*C1	R1706	*A5	R1892	*F5	TP311	L5				
R731	*K3	R951	*H4	R1251	*F3	R1398	*B2	R1549	*D3	R1707	*C5	R1894	*G5	TP312	L5				

DM-123
SUFFIX: -15

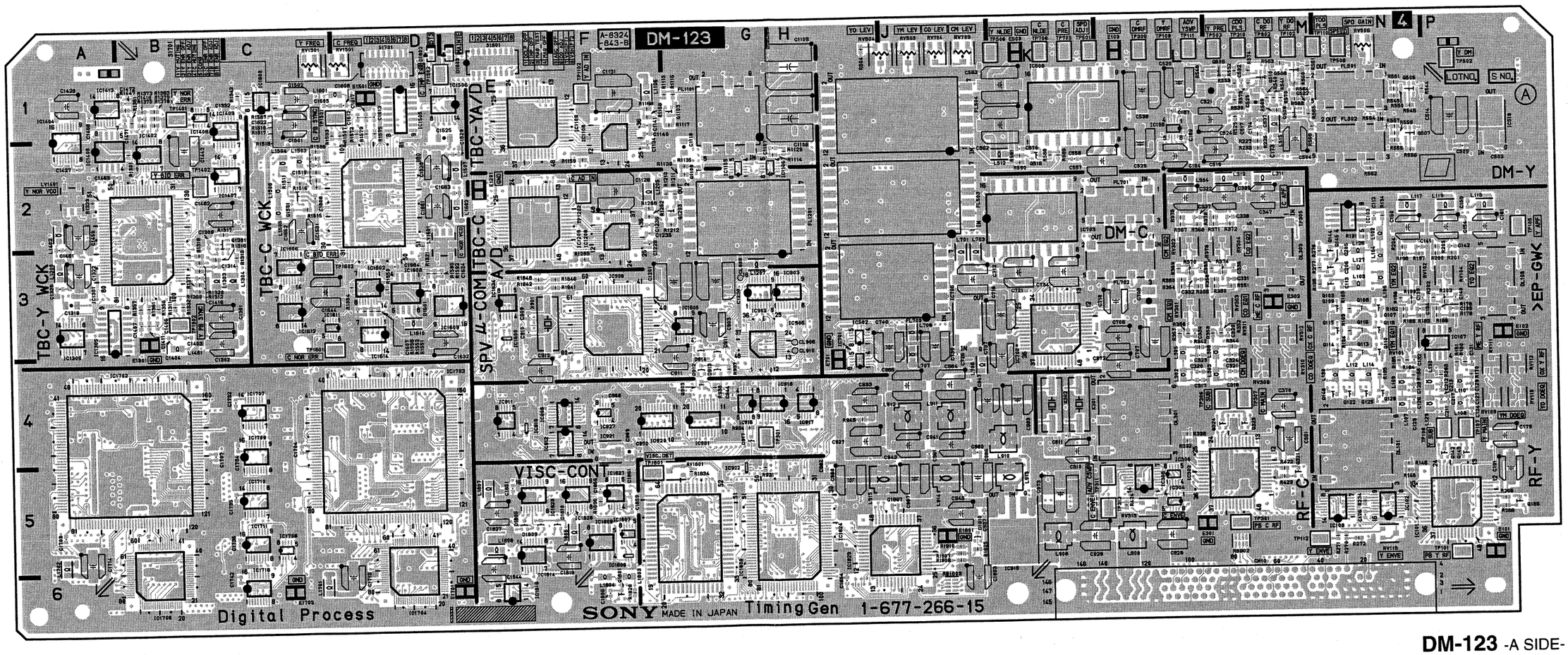

DM-123 -A SIDE-
SUFFIX: -15

Components locations list; previous page

4-20 (b)

DM-123
SUFFIX: -15

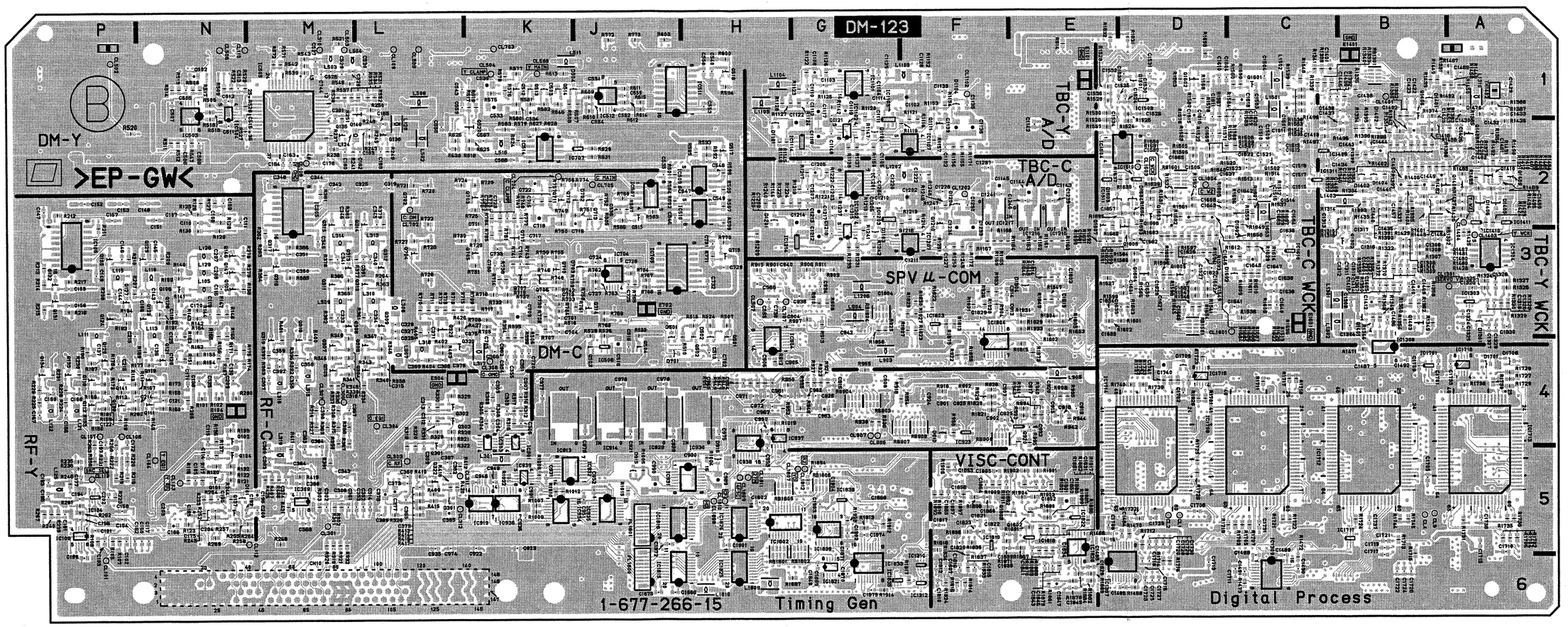

DM-123 -B SIDE-
SUFFIX: -15

4-21 (b)

DM-123 (1-677-266-14)

C101	*P5	C195	*P5	C371	*L3	C713	*K3	C972	*H4	C1311	*B3	C1515	*C2	C1714	A5	CL1	*D5	D1603	*E2	IC906	F4	IC1715	*D4	L701	J3	Q136	P5	Q1301	B2	R196	N3	R316	*K4	R414	*L5
C102	*P5	C196	*M5	C372	L4	C714	*K3	C973	K5	C1312	*C3	C1516	*C2	C1715	*A5	CL2	*D5	D1604	*D2	IC908	F3	IC1716	C6	L703	J3	Q137	*N5	Q1302	*B3	R197	N3	R317	*K4	R415	*L5
C103	*P5	C197	*P4	C373	*L5	C715	*K2	C974	*L5	C1313	*C2	C1517	*C2	C1716	*D6	CL3	*B5	D1701	*A4	IC910	E4	IC1717	*B5	L706	J4	Q138	*L2	Q1401	*B3	R198	N3	R318	*K4	R416	*L5
C104	*P5	C198	*P5	C374	*M5	C716	K3	C975	*H4	C1314	B3	C1518	*C2	C1717	*B6	CL4	*B5	D1705	*D4	IC911	E4	IC1718	*A4	L707	J4	Q139	*P4	Q1403	*B3	R199	N3	R319	*L4	R417	*L5
C105	*N5	C199	*P5	C375	*L3	C717	*K3	C976	*J4	C1316	*B3	C1519	C2	C1718	*D6	CL101	*P6	D1706	*A4	IC912	F4	IC1800	E3	L708	J3	Q140	*L1	Q1405	*A2	R200	P3	R320	*L4	R418	*L5
C106	*N3	C200	*M5	C376	*L4	C718	*K2	C977	*K4	C1317	*B3	C1521	*C2	C1719	*B5	CL103	*N5	D1802	D1	IC913	*K4	IC1802	*H5	L903	*G4	Q141	*P4	Q1406	*B1	R201	P3	R321	*L4	R419	*M5
C107	*N2	C201	*M1	C377	*L5	C719	*J2	C978	*J4	C1318	*A3	C1522	*C2	C1720	*D5	CL104	*N5	D1803	E1	IC914	*J4	IC1803	*F3	L904	*G3	Q142	P5	Q1407	*A2	R202	P3	R322	*L4	R420	*L5
C108	*N2	C202	*P5	C378	*L5	C720	*K4	C979	*J4	C1319	A3	C1523	*C2	C1721	*B5	CL106	*P4	D1804	*E3	IC915	K5	IC1804	*F4	L905	*E4	Q143	P5	Q1408	*B2	R203	P3	R323	*L4	R421	*M5
C109	*N2	C203	*N5	C379	*L5	C721	K3	C980	J5	C1320	*A3	C1524	*D1	C1722	*B6	CL107	*P4	D1805	E5	IC916	G4	IC1805	G3	L908	K5	Q144	N3	Q1409	*A2	R204	N3	R326	*L5	R422	M5
C110	*N2	C204	*N5	C380	*M4	C722	*K2	C981	J5	C1322	A3	C1525	E2	C1723	*D6	CL108	*M2	D1809	E5	IC917	H4	IC1806	F5	L909	L5	Q145	N3	Q1410	*A2	R205	P3	R327	*M4	R423	M5
C111	*N2	C205	N3	C381	M4	C723	*K2	C982	H5	C1323	A3	C1526	*D1	C1724	*B6	CL109	*L1	D1810	E5	IC918	G4	IC1807	F5	L910	K4	Q146	*N3	Q1501	C2	R206	*N4	R328	*L4	R424	L5
C112	N2	C206	N3	C382	*L5	C724	*J3	C983	K4	C1324	*A3	C1527	*D3	C1725	*D6	CL110	*N1	D1910	J5	IC919	*K5	IC1809	F5	L911	J4	Q147	*N3	Q1502	*C2	R207	*P3	R329	*L4	R425	*M5
C113	N3	C207	*N3	C383	*M5	C725	*J3	C984	J4	C1325	*A3	C1528	D2	C1726	*B6	CL112	*M5			IC920	F4	IC1810	*F5	L912	J4	Q148	N4	Q1601	*C1	R208	*P3	R330	*L4	R426	*L3
C114	*N5	C208	*N3	C384	*M5	C726	J4	C985	J4	C1326	*A3	C1529	E2	C1727	*D6	CL113	*P5	DL101	N5	IC921	F4	IC1814	E5	L913	K5	Q301	*L4	Q1602	*D1	R209	*N3	R331	*L4	R427	*L3
C115	*N4	C209	*N4	C385	*L5	C727	*J3	C986	J5	C1327	*A3	C1530	*D1	C1728	*D5	CL301	*M5	DL103	P3	IC922	G5	IC1815	*J6	L914	J5	Q302	*L4	Q1603	*D2	R210	*P3	R332	L4	R505	*N1
C116	*N3	C211	P4	C386	*M5	C728	*J3	C987	J5	C1328	*A3	C1531	*D1	C1729	*D5	CL303	*L5	DL301	L4	IC923	*F4	IC1816	*J5	L915	H5	Q303	*L4	Q1604	*D3	R211	*P2	R333	L4	R506	*K3
C117	*N5	C212	P4	C387	*L5	C729	*H3	C988	H5	C1329	*A3	C1532	*E1	C1730	*D5	CL304	*L4	DL303	M3	IC925	*E4	IC1818	*E5	L1103	*F1	Q304	*L4	Q1605	*D3	R212	*P2	R334	*L4	R507	*H3
C118	*N3	C213	P4	C388	*M5	C730	*K3	C989	*H5	C1330	*A3	C1533	*D1	C1731	*C5	CL306	*M4			IC927	F4	IC1819	E6	L1104	*H1	Q305	*M4	Q1606	*D2	R213	*P3	R335	*M4	R508	*N1
C119	*N3	C214	*P4	C389	*L5	C731	*H3	C990	*J5	C1332	C1	C1534	*E1	C1732	C4	CL307	*M4	E101	P6	IC929	*J4	IC1820	*E5	L1105	*H1	Q306	*L4	Q1607	*E2	R214	*P3	R337	*M4	R509	*N1
C120	*N4	C215	*P3	C390	*M4	C732	*H3	C991	*K5	C1401	*C1	C1535	*D1	C1733	*A4	CL308	*K4	E102	P3	IC930	*H4	IC1821	*G6	L1106	F1	Q307	*M4	Q1608	*D2	R215	*P3	R338	*L4	R510	*H3
C121	*N4	C216	*P4	C391	*L3	C733	*K3	C1102	*F1	C1402	*B2	C1536	*E1	C1734	C4	CL309	*L1	E103	L1	IC931	*H5	IC1822	*E5	L1202	*F2	Q308	*M3	Q1801	F6	R216	*P3	R339	*M4	R511	*N2
C122	*P4	C217	P4	C392	*M4	C734	K3	C1103	*G1	C1403	B3	C1601	*C1	C1735	C5	CL310	*M1	E104	*N4	IC932	*K5	IC1823	E5	L1205	F2	Q309	*L3	Q1802	*E5	R217	*P3	R340	*L4	R512	*N2
C123	N4	C301	*M5	C502	*N1	C735	*K3	C1104	*G1	C1404	B3	C1602	*D3	C1736	C5	CL311	*L5	E301	L5	IC934	*K5	IC1824	H5	L1206	*G3	Q310	*L3	Q1803	*E5	R218	*P5	R341	*M4	R513	*N1
C124	P4	C302	*M5	C503	P2	C736	*K2	C1105	*G2	C1405	*B3	C1604	*D1	C1737	*B5	CL312	*L5	E302	M3	IC935	*J5	IC1825	*H6	L1207	G3	Q311	*M3			R219	*P5	R342	L4	R514	*N1
C125	*N3	C303	*K4	C504	M2	C737	K4	C1106	H1	C1406	B3	C1605	C1	C1738	*A5	CL502	*P1	E304	*L4	IC936	*K5	IC1826	*H5	L1301	*C3	Q312	*L3	R117	*N5	R220	*P5	R343	*L4	R515	*H3
C126	N4	C304	*K4	C505	*N1	C738	*H3	C1107	H2	C1407	B3	C1607	D3	C1739	*D5	CL503	*M1	E503	K1	IC937	*H4	IC1827	F5	L1302	*C3	Q313	*M3	R122	*N5	R221	*P5	R344	M4	R516	*K3
C127	P4	C305	*K4	C506	*N2	C739	J4	C1108	*G1	C1408	*B2	C1608	D1	C1740	*D4	CL504	*K1	E701	H4	IC938	*H4	IC1828	F5	L1303	B3	Q314	*L2	R123	*N5	R222	*P5	R345	*M4	R517	*N1
C128	N4	C306	*K4	C507	*N1	C740	J4	C1109	H1	C1409	*B3	C1610	*D1	C1741	*D4	CL505	*K1	E702	*J3	IC939	*K5	IC1829	J5	L1304	C3	Q315	*M2	R125	*N2	R223	*P5	R346	*L4	R518	*N1
C129	P4	C307	*K4	C508	*N2	C744	*M1	C1110	*G1	C1410	*B3	C1611	*D1	C1742	C6	CL507	*H3	E1101	*E1	IC1101	*G1	IC1830	G5	L1305	A3	Q316	*M3	R126	*N2	R224	*P4	R347	*L3	R519	*N1
C130	*N4	C308	*M5	C509	P2	C901	*F4	C1111	*G1	C1411	B3	C1612	D1	C1801	*E5	CL508	*N1	E1201	E2	IC1102	*G2	IC1833	*G6	L1310	*A1	Q317	*M3	R127	*N2	R225	*P4	R348	*M4	R520	*P2
C131	P4	C309	*L4	C510	*H4	C902	*F4	C1112	*G1	C1412	*B3	C1613	D1	C1802	*H5	CL702	*L2	E1301	B3	IC1103	*G1	IC1834	E3	L1401	B3	Q318	*M3	R128	*N2	R226	M2	R349	*M3	R521	*M1
C132	N4	C310	K5	C511	*N2	C903	G3	C1114	*G1	C1413	*C2	C1615	*D1	C1803	*E3	CL703	*K1	E1401	*B1	IC1105	G2	IC1835	*G6	L1402	A2	Q319	*M3	R129	*N2	R227	M2	R350	M3	R522	*N1
C133	P3	C311	K4	C512	*N1	C904	*H3	C1116	*G2	C1414	*B3	C1616	*D1	C1804	*G3	CL704	*K2	E1501	D1	IC1106	H2	IC1838	*G5	L1403	*B2	Q320	*L4	R130	*N2	R228	*P4	R351	M3	R523	*N1
C134	N3	C312	*L4	C513	*N1	C905	*H4	C1117	*G1	C1415	*B3	C1617	D1	C1806	F6	CL705	*J2	E1601	*C3	IC1107	*F2	IC1839	*G5	L1501	*C1	Q321	M5	R131	N3	R229	*P4	R352	M3	R524	*H3
C135	*N4	C313	*L4	C514	P1	C906	*H4	C1118	G2	C1416	B3	C1618	*C1	C1807	*F6	CL707	*H3	E1701	E6	IC1108	F2			L1502	*C1	Q322	*L5	R132	*N5	R230	*P4	R353	M3	R525	M1
C136	*N4	C314	*L5	C515	*N1	C907	*F4	C1119	*G1	C1418	*B2	C1619	*C1	C1810	*F6	CL906	*G4	E1702	C6	IC1109	E1	L102	N3	L1503	C2	Q323	*L3	R133	*N4	R231	*P4	R354	L3	R526	*J3
C137	*P4	C315	*L4	C516	*J4	C908	*G4	C1121	*G1	C1419	B1	C1620	*C1	C1812	*F6	CL907	*G4	E1801	J5	IC1114	*G2	L103	N3	L1504	C2	Q324	M4	R134	N2	R233	M2	R355	L3	R527	*N2
C138	*N4	C316	*M4	C517	M1	C909	E3	C1122	*G2	C1420	*A2	C1622	C2	C1813	*E3	CL908	H3			IC1201	*G2	L104	N3	L1505	C2	Q325	M4	R135	N3	R234	N5	R356	L3	R528	*N1
C139	N3	C317	L4	C518	*J4	C910	E3	C1125	*G1	C1421	*B2	C1623	*D3	C1814	*E3	CL909	G3	FL501	N1	IC1202	*G3	L105	*N3	L1506	C2	Q501	*H3	R136	*N4	R235	*P5	R357	L3	R529	*J3
C140	P3	C318	M4	C519	M2	C911	G4	C1126	F2	C1422	*B1	C1624	D3	C1816	*F6	CL910	H4	FL502	N2	IC1203	*G2	L106	N3	L1507	E2	Q502	*H3	R137	*N5	R236	*P5	R358	M3	R530	M1
C141	N3	C319	*L2	C520	L1	C912	E4	C1128	*F1	C1423	*B1	C1625	*D3	C1817	*F5	CL1102	*F1	FL503	J2	IC1207	*F3	L107	N4	L1601	D1	Q503	*J4	R138	*N3	R237	*M2	R360	L3	R531	*L1
C142	P3	C320	L4	C521	M1	C913	*F3	C1131	F1	C1425	*B2	C1626	*D3	C1818	*F6	CL1202	*F2	FL504	J1	IC1208	F2	L108	P4	L1602	E2	Q504	*J4	R139	*N3	R238	*M2	R361	*L3	R532	*L1
C143	*N3	C321	M4	C522	M1	C914	*F3	C1132	*F2	C1426	*A2	C1627	*D3	C1819	F5	CL1301	*A3	FL701	L2	IC1209	E2	L109	N4	L1603	*C2	Q505	N1	R140	*N3	R239	*P5	R362	*M3	R533	*J3
C144	*P3	C322	L2	C523	L2	C915	*E4	C1133	*F1	C1427	A2	C1628	*D3	C1820	*F5	CL1401	*B1	FL702	L3	IC1214	*G3	L110	P4	L1610	D3	Q506	M1	R141	*N3	R240	*P5	R363	*L3	R534	*L1
C145	*N3	C323	L4	C524	M1	C916	*G4	C1134	F2	C1428	A1	C1630	*D3	C1821	*F5	CL1403	*A3	FL703	J3	IC1215	*E2	L111	*P3	L1701	C6	Q507	N2	R142	*N3	R241	*M2	R364	*L3	R535	*M1
C146	*P3	C324	M4	C525	M1	C917	*E4	C1135	*F1	C1429	*A1	C1631	*D3	C1822	*F5	CL1404	*A2	FL1101	G1	IC1216	*E2	L112	N4	L1702	A5	Q508	M1	R143	*N3	R243	*N5	R365	*M3	R537	*M1
C147	*P2	C325	*L2	C526	*M1	C918	*E4	C1138	*F2	C1430	*A1	C1632	E3	C1823	*F5	CL1601	*C3	FL1201	G2	IC1217	*F2	L113	*N3	L1803	F6	Q509	M1	R144	*N3	R244	*N5	R366	*M3	R538	*M1
C148	*N2	C326	*L3	C527	*M1	C919	*E4	C1139	*F2	C1432	*A1	C1633	*E3	C1827	E5	CL1603	*D2	FL1800	*J6	IC1301	B2	L114	N4	L1804	F6	Q510	M1	R145	N5	R245	*L2	R367	L2	R539	*M1
C149	*P3	C327	*L3	C528	*M1	C920	*E4	C1140	F2	C1433	*A1	C1634	*E3	C1828	*E6	CL1604	*D2	FL1801	*J5	IC1303	*A3	L115	*P3	L1805	F5	Q512	*K1	R146	N5	R246	*P5	R368	L2	R540	M1
C150	N3	C328	*L3	C529	*M1	C921	*J4	C1141	F1	C1434	*C2	C1635	*D3	C1829	*F3	CL1807	*G5			IC1304	*A3	L116	*N3	L1807	E5	Q513	*K1	R147	*N3	R247	*L2	R369	L3	R541	M1
C151	*N2	C329	M3	C530	*L1	C922	*K5	C1142	*E2	C1435	*B2	C1636	*C3	C1831	*E5	CL1808	*H5	IC101	P5	IC1305	A3	L117	N2	L1808	E5	Q514	*K1	R148	*N3	R248	*L1	R370	L3	R542	*M1
C152	*P2	C330	L3	C532	M1	C923	*K5	C1143	*E2	C1436	*B1	C1637	*D2	C1834	*E5	CL1809	*H5	IC102	N5	IC1306	A3	L118	P2	L1809	*H6	Q515	*J2	R149	*N4	R249	*L2	R371	M2	R543	*M1
C153	*P2	C331	M3	C533	*K1	C924	*F4	C1144	*E2	C1437	*B2	C1638	*C3	C1835	*F5	CL1810	*H5	IC103	N2	IC1402	B2	L119	P2	L1810	*H6	Q516	K2	R150	*P4	R250	*L1	R372	M2	R544	P1
C154	P3	C332	L3	C534	*K1	C925	*F4	C1145	*F2	C1438	*B1	C1639	*C3	C1839	*F5	CL1811	*H5	IC104	*P5	IC1404	A1	L120	*L2			Q517	*H2	R151	*N4	R251	*M1	R373	M3	R545	N1
C155	*P3	C333	*M3	C535	*J2	C926	*G4	C1148	*G2	C1439	*C1	C1640	*C3	C1841	*E5	CL1812	*G5	IC105	*P3	IC1405	A2	L121	*P4	LV1401	A2	Q518	*H1	R153	*P4	R252	*N5	R374	M3	R546	N1
C156	*P3	C334	*L3	C536	*J2	C927	H4	C1201	G3	C1440	*B2	C1641	*C3	C1843	*E6			IC106	L2	IC1406	*C2	L122	*P4	LV1601	E2	Q520	*K2	R154	*N4	R253	*N5	R375	L2	R548	M1
C157	*P2	C335	L3	C537	M1	C928	L5	C1202	*F2	C1441	*B2	C1642	*C2	C1844	E6	CN10	M6	IC107	P4	IC1407	C2	L123	P4			Q702	*L2	R155	*N4	R254	*N5	R376	M2	R549	*M1
C158	*P5	C336	M3	C538	L1	C929	K5	C1203	*G2	C1442	B2	C1643	*D2	C1845	*E6			IC108	N5	IC1408	B1	L124	*L2	Q101	*N5	Q703	*K2	R156	*N4	R255	*N5	R377	*L3	R550	N1
C159	P2	C337	L2	C539	*K1	C930	*H5	C1204	*G2	C1443	*B2	C1644	C3	C1846	*E6	D101	*N5	IC109	*P5	IC1409	C1	L125	*P5	Q102	*N4	Q704	*L3	R157	*N4	R256	*P5	R378	*M3	R551	N1
C160	*N5	C338	M2	C540	*H1	C931	*K5	C1205	*G2	C1444	*B2	C1645	*C3	C1847	*E6	D301	*L5	IC301	*K4	IC1410	*A2	L126	N3	Q103	N3	Q705	*K3	R158	*N4	R257	*N5	R379	*L2	R552	M1
C161	P3	C339	M2	C543	*L1	C932	*E4	C1206	*G2	C1446	*C1	C1646	*C3	C1849	*G6	D501	*J3	IC302	M5	IC1411	*A2	L127	N3	Q104	*N5	Q706	*K3	R159	*P4	R258	*N5	R380	*M2	R553	M1
C162	*P5	C340	*L3	C546	*J2	C933	H4	C1207	*G2	C1449	*B2	C1647	*C3	C1850	*E5	D502	*H3	IC303	*K4	IC1413	A1	L128	*N3	Q105	*N3	Q707	*K3	R160	*N4	R260	*P4	R381	*M2	R554	N1
C163	*M2	C341	*M3	C547	*H2	C934	*G3	C1209	*G2	C1450	*B2	C1657	*E2	C1851	E5	D503	*K1	IC304	L5	IC1501	D2	L129	*N3	Q106	*N3	Q710	*K3	R161	*P4	R261	*P5	R382	*M3	R555	N2
C164	*M2	C342	*M2	C548	*H2	C935	*L5	C1210	*G2	C1457	*B2	C1658	*D2	C1852	*E5	D504	*K1	IC305	*M2	IC1502	D3	L130	N4	Q107	N3	Q711	*K2	R162	*N3	R262	*P5	R383	*M3	R556	N2
C165	*L2	C343	*M5	C549	*H2	C936	*K5	C1211	*F3	C1458	A2	C1659	*D2	C1853	J6	D701	*J4	IC306	L5	IC1503	*D1	L132	P4	Q108	N3	Q712	*J2	R163	*N3	R263	*P4	R384	*M3	R557	N2
C166	*P4	C344	*M2	C550	*H1	C937	J5	C1212	*G3	C1459	*A2	C1661	D2	C1854	H6	D702	*J2	IC308	L5	IC1504	*D2	L301	*K5	Q109	N3	Q713	*J2	R164	*N3	R264	*N5	R385	*M3	R559	N2
C169	*P4	C345	*L2	C551	*J1	C938	*G3	C1213	*G2	C1460	*B3	C1662	C2	C1855	*F5	D703	*J3	IC309	*M5	IC1505	D1	L302	L4	Q110	N4	Q714	*J3	R165	*N3	R265	P5	R386	*M3	R560	M1
C170	*N3	C346	*M2	C552	*J1	C939	*J4	C1214	*G2	C1461	A2	C1663	E2	C1856	F5	D910	*F4	IC502	H3	IC1506	E1	L303	M4	Q111	*N4	Q715	*H3	R166	*N3	R266	P5	R387	*M4	R561	M1
C171	*N4	C347	M2	C553	*H1	C940	*H3	C1215	*G2	C1462	B2	C1664	D3	C1857	*F5	D911	G4	IC503	*N1	IC1510	*D2	L304	L2	Q112	*P4	Q717	*K3	R167	*N4	R267	*P5	R388	*M4	R562	N2
C172	*P4	C348	*M2	C554	*J1	C941	J4	C1217	*G2	C1463	B2	C1665	*D2	C1858	*F5	D912	G4	IC504	*N1	IC1511	*E2	L305	L4	Q113	N4	Q903	G4	R168	N4	R268	*M5	R389	*M4	R563	M1
C173	M2	C349	*M3	C555	*J1	C942	*G3	C1218	*G3	C1464	*B3	C1666	*D3	C1859	F5	D913	G4	IC505	*M1	IC1603	C1	L306	M4	Q114	N4	Q920	*E4	R169	*P4	R269	*N5	R390	*M4	R564	M1
C174	M2	C350	*M3	C556	*L2	C943	J4	C1220	*G2	C1468	A1	C1667	*D3	C1860	*P5	D914	G4	IC506	*J4	IC1606	C3	L307	*L4	Q115	N3	R101	*N4	R175	*N4	R270	N5	R391	*M5	R565	M1
C175	*N5	C351	*M3	C557	L2	C944	G4	C1222	*F2	C1469	*A1	C167	*P4	C1861	F5	D915	*J5	IC507	*J2	IC1608	D3	L308	*L3	Q116	N3	R102	*N4	R176	*P4	R271	N5	R392	*M4	R566	M2
C176	N5	C352	*L5	C558	K2	C945	J5	C1227	*F3	C1470	*A1	C168	*P4	C1862	*F5	D916	*H5	IC508	K1	IC1609	E3	L309	*M3	Q117	N3	R103	N3	R177	*N4	R272	N5	R393	*M4	R568	M1
C177	*P5	C353	*M5	C559	*L1	C946	*K5	C1228	*F2	C1471	B1	C1680	*D2	C1863	*F5	D917	G4	IC509	*H2	IC1610	*C3	L310	*L3	Q118	*P4	R104	N4	R178	P3	R276	N3	R394	*K3	R569	M1
C178	*M2	C354	*K4	C562	K1	C947	J4	C1229	F3	C1472	B1	C1681	*E3	C1864	*F5	D1101	*H2	IC510	*H2	IC1611	C3	L311	M2	Q119	*N4	R105	N3	R179	P3	R277	N3	R395	*K3	R570	M1
C179	P4	C355	*K4	C563	K1	C949	*K5	C1230	*F2	C1480	*A2	C1682	*D3	C1865	*F5	D1102	*G2	IC511	*J1	IC1612	C3	L312	M2	Q120	*P4	R106	*P5	R180	P4	R278	*N3	R396	*M4	R571	*M1
C180	*M2	C356	*M4	C565	*H3	C950	*H4	C1233	*F2	C1481	*A2	C1683	*D2	C1866	*J6	D1103	*G3	IC512	*J1	IC1614	D3	L313	*L3	Q121	*N4	R107	*P5	R181	P4	R279	*N3	R397	*M4	R572	*M1
C181	*P5	C357	*M4	C567	*K2	C951	*J5	C1234	*F2	C1482	*A2	C1684	*D2	C1867	J5	D1104	*F1	IC513	P1	IC1701	*B4	L314	*M3	Q122	N4	R108	*P5	R182	N3	R280	*N4	R399	*K3	R573	M1
C182	*L2	C358	*M4	C568	*K2	C952	*J5	C1235	F2	C1501	C1	C1701	*B4	C1868	*G5	D1201	*H2	IC514	*K2	IC1702	B4	L315	*M4	Q123	*N3	R109	*P4	R183	N3	R282	*P4	R400	*M3	R574	M1
C183	*L2	C359	*M4	C570	K2	C953	*H4	C1236	F2	C1502	C1	C1702	*D4	C1869	*G6	D1204	*F2	IC701	H4	IC1703	D4	L316	*M4	Q124	*P3	R111	*P4	R184	N4	R283	P4	R401	*M3	R575	*K1
C184	L2	C360	*L5	C701	*K3	C961	*H4	C1237	*F2	C1503	*C1	C1703	A5	C1870	*G6	D1301	*A3	IC702	K3	IC1704	D6	L317	*K4	Q125	N4	R112	*P4	R185	N4	R301	*M5	R402	*L4	R576	*K1
C185	*N5	C361	*K4	C702	*H4	C962	*G4	C1238	G3	C1504	*C1	C1704	C4	C1871	*G5	D1401	*B1	IC703	K2	IC1705	B6	L318	*L4	Q126	*N3	R113	*P4	R186	P3	R302	*M5	R403	*L4	R577	*K1
C186	*N5	C362	*K3	C704	*K3	C963	*G4	C1301	B3	C1505	*D2	C1705	*B5	C1872	*J5	D1402	*B2	IC704	*J3	IC1706	C5	L319	*M5	Q127	*P3	R116	*N5	R187	*P4	R303	*M5	R404	*L4	R578	*K1
C187	L1	C363	*M4	C705	*K3	C964	*H4	C1302	B3	C1507	*D2	C1706	*D5	C1873	*J6	D1403	*B2	IC705	*J3	IC1707	C4	L502	*L2	Q128	N4	R120	*N5	R188	N3	R304	*K4	R405	*L3	R579	*K1
C188	*L2	C364	*M4	C706	L3	C965	*H4	C1303	*B3	C1508	C2	C1707	B4	C1874	*G5	D1404	*B2	IC706	J3	IC1708	*C5	L503	*M1	Q129	*N3	R1209	*H3	R189	*N4	R305	*K4	R406	*M5	R580	*K1
C189	L2	C365	*L5	C707	L4	C966	*H3	C1304	*B3	C1509	*C2	C1708	*E5	C1875	*G6	D1405	*A2	IC707	*J2	IC1709	C4	L504	*M1	Q130	*P3	R121	*N5	R190	*P4	R306	*M4	R407	*M5	R581	*K1
C190	*N5	C366	*K4	C708	L3	C967	*H4	C1305	*B3	C1510	*C2	C1709	*B4	C1901	*H5	D1406	*A2	IC901	G4	IC1710	C5	L506	*L1	Q131	*P3	Q1103	G1	R191	*N3	R308	*K4	R409	*L5	R582	*K1
C191	P5	C367	*M4	C709	*K3	C968	F4	C1306	*B3	C1511	*C2	C1710	*A5	C1902	*G5	D1501	*D1	IC902	G3	IC1711	C5	L511	*K1	Q132	*P3	Q1108	G2	R192	*N3	R309	*K4	R410	*L5	R583	*K2
C192	*N5	C368	*L4	C710	L3	C969	F4	C1308	*B3	C1512	*C2	C1711	*C6	C1903	*G5	D1502	*C2	IC903	H3	IC1712	*B5	L512	K2	Q133	*P4	Q1111	*F2	R193	*P3	R312	*K4	R411	*M4	R584	*J2
C193	*P5	C369	*L4	C711	*K2	C970	F4	C1309	B2	C1513	*C2	C1712	D6	C1904	*G5	D1601	D3	IC904	*H3	IC1713	*A5	L515	M2	Q134	*P4	Q1203	G2	R194	*P3	R314	*M4	R412	*L5	R585	*J2
C194	*P5	C370	M4	C712	J3	C971	*H4	C1310	*B3	C1514	*C2	C1713	*D6			D1602	*C3	IC905	G3	IC1714	*D5	L516	*K2	Q135	*M2	Q1210	*F2	R195	N4	R315	*M4	R413	*L5	R586	*J2

R587	*J2	R763	*J3	R1118	*F1	R1326	*A3	R1453	*A1	R1587	C2	R1738	*A4	RB901	*F4		
R588	K2	R764	*J3	R1119	*F2	R1327	*A3	R1456	*B1	R1588	*C2	R1739	*D4	RB902	M5		
R589	K2	R765	*J3	R1120	*G1	R1328	*A3	R1467	*A1	R1590	*D3	R174	*N4	RB903	*G4		
R590	K2	R766	*J3	R1121	*F1	R1329	*A3	R1480	*A2	R1591	*D3	R1740	*D4	RB904	*G4		
R591	K2	R767	*J3	R1122	*G1	R1330	*A3	R1481	*A2	R1592	D3	R1744	*B5	RB907	*G4		
R592	*H2	R768	*J3	R1123	*G1	R1331	*A1	R1482	*B2	R1593	*D3	R1745	*B5	RB908	*F4		
R593	*H2	R769	*J3	R1124	*G1	R1332	B3	R1483	*A2	R1594	*D3	R1801	*E5	RB1301	*B1		
R594	*H1	R770	*H3	R1125	*G1	R1333	*C1	R1484	*A2	R1595	D3	R1802	*E3	RB1302	*B2		
R595	*H2	R771	*H3	R1126	*G1	R1334	*B2	R1485	*B2	R1596	*D3	R1803	*E3	RB1501	*D3		
R596	*H2	R772	*J1	R1127	*H1	R1335	*B2	R1486	*B2	R1597	*D3	R1804	*E3	RB1601	*D2		
R597	*H2	R773	*J1	R1128	*H1	R1336	*B1	R1487	*B2	R1598	*D3	R1805	*E3	RB1801	*H5		
R598	*H2	R774	*J2	R1129	H2	R1337	*B2	R1488	*B2	R1599	*D3	R1807	*F3	RB1802	*G5		
R599	*H2	R775	*K2	R1135	G2	R1338	*C1	R1489	*A2	R1600	*D3	R1813	*F3	RB1803	J6		
R600	*H1	R776	*K2	R1137	*G2	R1339	*C1	R1490	*A2	R1601	*D3	R1814	*F6	RB1804	*G3		
R601	*J2	R777	*K2	R1138	*G2	R1340	*C1	R1491	*A2	R1602	*E3	R1815	*E4	RB1805	*H5		
R602	*J2	R781	*K2	R1139	G2	R1341	*C1	R1492	*A2	R1603	*D3	R1816	*F6	RB1806	*G5		
R603	*J1	R784	*K2	R1142	*G1	R1342	C1	R1493	*A2	R1605	*D2	R1817	*F6				
R604	H1	R785	*K3	R1144	*H2	R1343	*B2	R1494	*A2	R1606	*D2	R1818	*F5	RV101	N4		
R607	*J1	R805	*J2	R1145	*H2	R1344	*B3	R1495	*A2	R1607	*C2	R1819	*F5	RV102	N3		
R608	*K1	R901	*H3	R1146	*H2	R1345	*B3	R1496	*B2	R1608	*C3	R1820	*F4	RV104	P3		
R609	*J1	R902	*F4	R1147	*G2	R1346	*B2	R1497	*C2	R1609	*C3	R1821	*F4	RV109	P4		
R610	*J1	R903	*E4	R1150	*G2	R1349	*B3	R1498	*C2	R1610	*C3	R1822	*F3	RV110	P4		
R611	*J1	R904	*F3	R1152	*F1	R1350	*B3	R1505	*D2	R1611	*C3	R1824	*F6	RV111	P4		
R612	*J1	R905	*E4	R1153	*F1	R1351	*B2	R1506	*D2	R1612	*C3	R1828	F6	RV112	P4		
R613	*K1	R906	*G3	R1154	*F1	R1352	*B2	R1507	D1	R1614	*C3	R1829	*F3	RV113	N5		
R614	*J1	R907	*G3	R1155	*F2	R1353	*B2	R1508	*D2	R1622	*D3	R1830	*F3	RV1301	C1		
R615	*J1	R908	*G3	R1156	*F2	R1354	*B3	R1509	*D2	R1623	*C3	R1831	*D1	RV1501	D1		
R617	*K1	R909	*G3	R1157	*F2	R1355	*B3	R1510	C2	R1626	*D3	R1832	*E1	RV301	L3		
R618	*K2	R910	*G3	R1158	F1	R1356	B3	R1511	C2	R1637	*D2	R1833	*F6	RV302	L3		
R619	*K1	R911	*G3	R1159	F2	R1357	B3	R1512	*C2	R1638	*D2	R1834	*F5	RV303	M3		
R624	*K2	R912	*H4	R1160	*E3	R1358	*B3	R1513	*C2	R1639	*D2	R1835	*F5	RV304	M3		
R625	*K2	R913	*G3	R1161	*E3	R1359	*B2	R1514	*C2	R1640	*D2	R1836	*F5	RV309	M4		
R626	*L2	R914	*E1	R1162	*E3	R1360	*B3	R1515	C2	R1645	*D3	R1837	*F5	RV310	M4		
R627	*K2	R915	*H3	R1163	*E3	R1361	B3	R1516	C2	R1649	*C2	R1841	F3	RV311	M3		
R628	*K2	R916	*F4	R1164	*F3	R1362	*B3	R1517	C2	R1650	*C3	R1842	E3	RV312	M3		
R629	*J2	R918	*G4	R1165	*F3	R1363	B1	R1518	C2	R1654	*D3	R1844	*E3	RV313	L5		
R630	*L2	R919	*M5	R1166	*F3	R1364	*B2	R1519	*D3	R1680	*D2	R1845	*E3	RV503	J1		
R631	*J2	R920	*M5	R1167	*F3	R1367	*B3	R1520	*D2	R1681	*D2	R1846	F3	RV504	J1		
R646	*K1	R921	*M5	R1168	F1	R1368	*B3	R1521	D3	R1682	*D2	R1847	*E3	RV506	N1		
R647	*N2	R922	*F4	R1169	*F3	R1369	B3	R1522	*D2	R1683	*D2	R1848	E3	RV703	J1		
R703	*K3	R923	*G4	R1171	*F2	R1370	*B3	R1523	*D2	R1684	*D3	R1849	*E3	RV704	J1		
R704	*K3	R924	*G4	R1172	*F3	R1371	B3	R1524	*D2	R1685	*D3	R1856	*G3				
R705	*K3	R925	*G3	R1210	G2	R1372	*B3	R1525	*D1	R1686	*D3	R1858	*F4	S1701	D1		
R706	*K3	R926	*F3	R1211	G2	R1373	B1	R1526	*E2	R1687	*D3	R1861	*E5	S1801	E1		
R707	*K3	R927	*G4	R1212	G2	R1374	*B1	R1527	*E3	R1688	*D3	R1862	*E5				
R708	*K3	R928	*F4	R1213	*F2	R1375	B1	R1528	*E1	R1689	*E2	R1867	*E5	TH1402	*A1		
R709	*K3	R929	*F4	R1214	*F2	R1376	*A2	R1529	*E1	R1690	*E3	R1868	*E5				
R710	*L3	R930	*F4	R1215	*G2	R1377	*A2	R1432	*B2	R1691	*E3	R1869	*E5	TP101	P6		
R711	*L3	R931	G5	R1216	*F2	R1378	B1	R1530	*E1	R1692	*D3	R1870	*E5	TP102	M1		
R712	*L3	R932	*M5	R1217	*G2	R1379	B1	R1531	*D2	R1693	*D2	R1871	*F5	TP105	P3		
R713	*L3	R933	*F3	R1219	*G2	R1380	*B1	R1532	*D2	R1694	*D2	R1873	*E4	TP106	P4		
R714	*K3	R934	G4	R1220	*G2	R1381	B1	R1533	D1	R1695	*D2	R1875	*F3	TP107	P4		
R715	*L3	R935	*G4	R1221	*G2	R1382	*B1	R1535	*C1	R1696	*D3	R1878	*E6	TP109	L1		
R716	*L3	R936	*G4	R1222	*G2	R1383	*A2	R1536	*C3	R1697	*D2	R1879	*E6	TP110	N1		
R717	*K3	R937	G4	R1224	*H2	R1384	*A2	R1537	*C2	R1699	*D2	R1881	*E6	TP1102	F1		
R718	*K3	R938	G4	R1225	*H2	R1385	*A1	R1538	*C1	R170	P4	R1882	*E6	TP111	L1		
R719	*K3	R939	*G4	R1231	*G3	R1386	*B2	R1539	*C1	R1701	*D4	R1883	*E6	TP112	N5		
R720	*L2	R940	*E4	R1233	*G3	R1387	*A1	R1541	*D3	R1702	*A5	R1884	*E6	TP301	M5		
R721	*L2	R941	*E4	R1237	*G2	R1388	*A1	R1542	*C1	R1703	*C5	R1885	*E5	TP302	M1		
R722	*L2	R942	*E4	R1240	*H2	R1390	*B2	R1546	*D3	R1704	*A5	R1886	*E5	TP305	M2		
R723	*K2	R943	*E4	R1241	*G3	R1391	*B2	R1547	*D3	R1705	*C5	R1887	*H6	TP306	M4		
R724	*L2	R944	*E4	R1242	*G3	R1392	*B1	R1548	*C1	R1706	*A5	R1888	*E5	TP307	M4		
R725	*K2	R945	H4	R1246	*F2	R1393	*B2	R1549	*D3	R1707	*C5	R1889	*E5	TP309	L1		
R726	*L3	R946	*G4	R1247	*F2	R1394	*B2	R1550	D3	R171	*N4	R1890	*E5	TP310	M1		
R727	*L3	R947	*H4	R1248	*F2	R1395	*B2	R1551	D3	R1711	*C4	R1891	*E5	TP311	L5		
R728	*L3	R948	*H4	R1249	*F3	R1396	*B2	R1552	D3	R1712	*D5	R1892	*F5	TP312	L5		
R729	*K3	R949	*H4	R1250	*F3	R1397	*B2	R1553	*C1	R1713	*B5	R1894	*G5	TP501	K1		
R730	*L3	R950	*H4	R1251	*F3	R1398	*B2	R1554	D3	R1714	*D6	R1896	F5	TP502	P1		
R731	*K3	R951	*H4	R1252	F2	R1399	*B2	R1555	*D2	R1715	*B5	R1897	*F5	TP503	M1		
R732	*K3	R952	*H4	R1253	F3	R1401	*B2	R1556	D3	R1716	*D6	R1898	*F5	TP506	K1		
R737	*K3	R954	*G4	R1268	F2	R1402	*B2	R1557	*E2	R1717	*C4	R1901	*E5	TP508	N1		
R738	*K3	R955	*G4	R1301	B2	R1404	*B2	R1559	*C1	R1718	*C4	R1902	*E5	TP703	K1		
R739	*K3	R993	*E4	R1306	*B3	R1406	*B2	R1560	*C1	R1719	*D5	R1903	*E5	TP706	K1		
R740	*K3	R994	*E4	R1307	*B3	R1410	*B2	R1561	*D2	R172	*P4	R1904	*E5	TP901	G4		
R741	*K3	R995	*E4	R1308	*B3	R1412	*B2	R1562	*D2	R1721	*C5	R1906	*F5	TP1202	F2		
R742	*K3	R1004	*H5	R1309	*B3	R1423	*A2	R1563	*D1	R1722	*C5	R1907	J5	TP1302	B3		
R743	*K3	R1005	*J5	R1310	*B3	R1424	*A2	R1564	*D3	R1723	*D4	R1908	J6	TP1401	B1		
R746	*K3	R1006	*K5	R1311	B3	R1425	*A3	R1565	*D3	R1724	*B5	R1909	*F5	TP1402	B2		
R747	*K2	R1007	*K5	R1312	B3	R1426	*B2	R1566	*D3	R1725	*D5	R1910	J5	TP1501	D1		
R748	*K2	R1009	*K5	R1313	C3	R1427	*B2	R1567	*D1	R1726	*A4	R1911	*F5	TP1502	E1		
R749	*K2	R1010	*K5	R1314	*B2	R1428	*A2	R1568	*D1	R1727	*A4	R1912	*G5	TP1601	D3		
R750	*K2	R1012	*K5	R1315	*B2	R1429	*B3	R1571	*D2	R1728	*D5	R1913	*G5	TP1602	C3		
R751	*J2	R1015	*J5	R1316	*B2	R1435	*B2	R1572	D1	R1729	*A4	R1914	*G6				
R752	*J2	R1019	*H4	R1317	B2	R1436	*A2	R1575	D1	R173	*N4	R1917	*E5	X301	K4		
R755	*K3	R1020	*F3	R1318	B3	R1438	*B2	R1576	*D1	R1730	*A4	R1925	J5	X302	K4		
R756	*K2	R1021	*F3	R1319	B3	R1439	*B1	R1578	*D1	R1731	*A5	R1926	*D4	X901	E3		
R757	*K2	R1022	*K5	R1320	B3	R1443	*B2	R1579	D1	R1732	*D5	R1927	*F3				
R758	*J3	R1023	*F3	R1321	*B2	R1446	*A1	R1580	*D1	R1733	*D4	R1928	*G5	*:B SIDE			
R759	*J3	R1114	H2	R1322	*B3	R1447	B1	R1583	*D1	R1734	*D4	R1929	*E3				
R760	*J2	R1115	G1	R1323	A2	R1449	*B1	R1584	*C1	R1735	*A5	R1931	*E3				
R761	*J3	R1116	G1	R1324	*A3	R1450	*A1	R1585	*D2	R1736	*A5	R1933	*E3				
R762	*J3	R1117	G1	R1325	*A3	R1452	*A1	R1586	C2	R1737	*D4						

DM-123
SUFFIX: -14

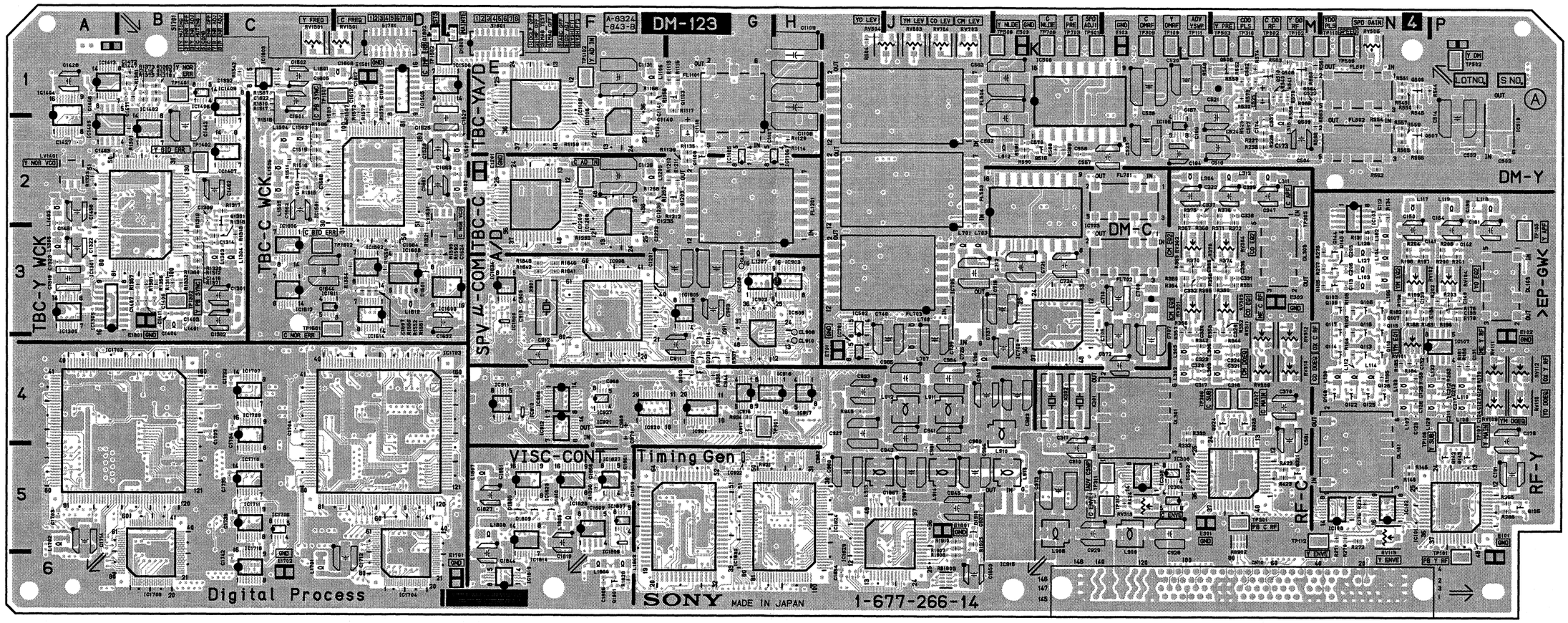

Components locations list; previous page

DM-123 -A SIDE-
SUFFIX: -14

4-20 (a)

DM-123
SUFFIX: -14

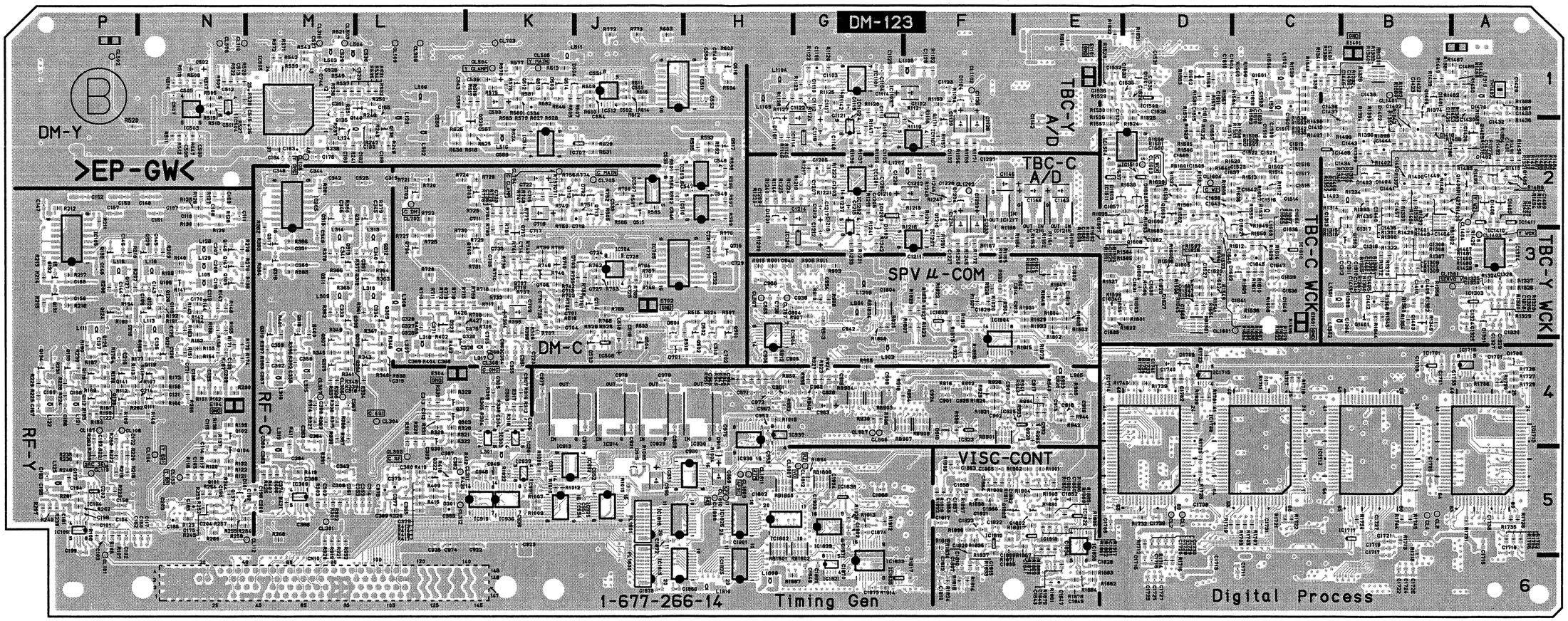

DM-123 -B SIDE-
SUFFIX: -14

4-21 (a)

DPR-155 (1-677-279-14)

C100	P5	C409	*M2	C611	G2	C812	B6	CL133	D2	CL373	K5	CL510	J3	CL675	E5	CL885	H4	E401	L3	IC600	F2	R118	*C2	R404	M3	R781	A3	R1040	C2	RB711	*A3
C101	*P5	C410	M3	C612	G3	C813	A6	CL134	D2	CL374	K5	CL511	J2	CL676	F5	CL886	H4	E500	L1	IC601	*E4	R122	*D2	R405	*K6	R782	A2	R1041	A4	RB712	*B2
C102	*D6	C411	*M2	C613	*F2	C814	B5	CL135	D2	CL375	K5	CL512	L2	CL677	E5	CL887	H4	E600	G3	IC602	*F5	R124	*D2	R406	*K6	R783	A3	R1042	C2	RB800	*D1
C103	B5	C412	H5	C614	*F2	C815	*B5	CL136	D2	CL376	K5	CL513	L2	CL678	E5	CL888	H4	E700	B3	IC603	*F5	R125	*D2	R407	*K6	R784	A2	R1043	C1	RB801	B5
C104	*C5	C413	J5	C615	G2	C816	*B5	CL137	D2	CL377	K5	CL514	J3	CL679	G6	CL889	G4	E800	D4	IC604	*E5	R126	*D2	R408	*K6	R785	A3	R1044	C2	RB804	D5
C105	*C5	C415	H5	C616	*F2	C817	*A5	CL139	D2	CL378	K5	CL515	J2	CL680	G6	CL890	G4			IC605	*G2	R130	*D2	R409	*J6	R786	A3	R1049	B4	RB805	D6
C106	*C5	C417	K5	C617	G3	C818	*A5	CL140	D2	CL379	K5	CL516	J2	CL681	E4	CL891	G4	F801	B6	IC606	D2	R131	*D2	R410	*J6	R787	B3	R1050	A4	RB806	C5
C107	*D5	C418	K5	C618	*F2	C819	B5	CL141	C2	CL380	K5	CL517	J2	CL682	E4	CL892	G4	F802	A5	IC607	F1	R132	*D2	R411	*J6	R788	A2	R1051	C2	RB807	D5
C108	*D5	C419	*J4	C619	*F2	C820	*B5	CL142	C2	CL381	K4	CL518	J2	CL683	E4	CL893	G4	F803	A5	IC700	D3	R133	*D2	R412	*J6	R789	A2	R1052	*A4	RB808	F6
C109	*C4	C420	*J5	C620	*F2	C821	A5	CL143	C2	CL382	K4	CL519	J2	CL684	E4	CL894	F5			IC701	A3	R134	*C2	R413	*J6	R790	A2	R1053	*D3	RB809	F6
C110	*C4	C421	*J5	C621	*E3	C822	A5	CL144	D2	CL384	K4	CL520	J2	CL685	E4	CL895	G4	FB200	*N5	IC702	*A3	R135	*C2	R414	*J6	R791	A2	R1054	*B4	RB810	K6
C111	*C5	C422	*J5	C622	*F3	C823	F5	CL145	D4	CL385	K4	CL521	J2	CL686	E3	CL896	E5	FB600	*F3	IC703	*A3	R136	*E5	R415	*J6	R792	A3	R1055	*A2	RB811	C6
C112	*D5	C423	*K4	C623	*F2	C824	B5	CL146	D4	CL386	K4	CL522	J2	CL687	E3	CL897	G5	FB601	*F3	IC704	B3	R138	P5	R416	*J6	R793	B2	R1056	*B2	RB812	C6
C113	*D4	C424	*K5	C624	*E2	C827	*E5	CL147	D4	CL390	K4	CL523	J2	CL688	E3	CL981	H1			IC705	*B3	R139	P5	R417	*J6	R794	B3	R1057	A4	RB813	E6
C114	*C5	C425	*J4	C625	*E3	C829	D5	CL148	C4	CL391	K4	CL524	J2	CL689	E3	CL982	J2	FL200	*N6	IC706	*B3	R140	C4	R418	*J6	R795	B2	R1058	B4	RB814	E6
C115	*D5	C426	*J4	C626	*F2	C831	E5	CL149	C4	CL392	K4	CL525	J2	CL690	E3	CL983	J2	FL600	*F6	IC707	A2	R141	C4	R419	*H6	R796	*A2			RB815	D6
C116	*C5	C427	*J4	C627	*F3	C832	K5	CL150	C4	CL393	K5	CL526	J2	CL691	E4	CL984	J2	FL601	*F6	IC708	*A1	R200	*N6	R420	*H6	R797	*B2	RB100	*P6	RB816	D6
C117	*D2	C428	*J5	C628	*F2	C833	E5	CL151	C4	CL394	K4	CL527	J2	CL692	G2	CL985	J2	FL602	*E6	IC709	*A2	R205	*P5	R421	*K6	R801	H4	RB101	*P5	RB817	D5
C118	*P5	C429	*J5	C629	*F3	C834	E4	CL152	C4	CL395	K4	CL600	F1	CL693	G2	CL986	J2			IC710	B2	R206	*P5	R422	*K6	R802	*B5	RB102	*P5	RB818	*D1
C119	*C4	C430	*K5	C630	*F2	C835	E4	CL153	C4	CL396	K4	CL601	F1	CL694	G2	CL987	J2	IC100	*P5	IC711	*B1	R207	*N5	R423	*K6	R803	G4	RB103	*P5	RB819	*C5
C120	*P5	C431	*K4	C631	*F3	C837	J5	CL154	C4	CL397	K4	CL602	F1	CL695	G2	CL988	J2	IC101	*P5	IC712	*B2	R220	N5	R424	*K6	R804	*B5	RB104	*C6		
C121	*E5	C432	*K4	C632	*E2	C838	C5	CL155	C4	CL398	*M4	CL603	F1	CL696	G2	CL989	J2	IC102	*P5	IC801	B5	R222	L5	R428	J6	R805	H5	RB105	*B6	S800	E1
C122	*D5	C433	J3	C633	*F1	C839	C5	CL156	D4	CL399	*M4	CL604	F1	CL697	G2	CL990	H1	IC103	*P5	IC802	C5	R223	L5	R429	J5	R806	H5	RB106	*C6		
C123	*E5	C434	G5	C634	*E2	C842	D5	CL157	D5	CL400	N3	CL605	F1	CL698	G2	CL991	H1	IC104	*E5	IC803	F4	R232	L5	R430	J5	R807	H5	RB107	*D6	X200	P5
C124	*D5	C435	G5	C635	*F1	C843	K5	CL158	D4	CL401	N3	CL606	F1	CL699	G2	CL992	J2	IC105	*D5	IC804	F5	R250	P5	R431	J6	R808	*B5	RB108	*C5		
C125	*C4	C437	G5	C636	*D2	C844	C5	CL159	D5	CL402	N3	CL607	F1	CL700	G2	CL993	J2	IC106	*E5	IC805	E5	R251	P5	R432	J5	R809	*B5	RB109	*B5	*:B SIDE	
C126	*D5	C439	H5	C637	*E1	C845	D5	CL160	C5	CL403	N3	CL608	F1	CL701	E3	CL994	G2	IC107	*C5	IC808	E5	R252	P4	R433	J5	R811	C5	RB110	*C5		
C127	C4	C440	J6	C638	*D2	C846	F5	CL161	C4	CL404	N2	CL609	F1	CL703	A4	CL995	H3	IC108	*C5	IC809	E4	R253	P5	R434	J5	R812	C5	RB111	*C5		
C200	N5	C500	J2	C639	*E1	C847	C5	CL162	D4	CL405	N2	CL610	F1	CL704	B3	CL996	J2	IC109	*C5	IC810	E5	R254	P5	R435	J5	R813	F5	RB112	*C5		
C201	N5	C501	K3	C640	*F3	C848	F5	CL163	D4	CL406	N2	CL611	F1	CL705	A4	CL997	J2	IC110	*D5	IC812	J5	R255	P5	R436	J5	R814	E5	RB113	*B5		
C202	N5	C502	K3	C641	*F3	C849	C5	CL200	N6	CL407	N2	CL612	F1	CL706	A4	CL998	J2	IC111	*D5	IC813	E5	R256	P5	R437	*K6	R815	E5	RB114	*D4		
C203	N5	C503	K3	C700	*D3	C850	C5	CL305	L5	CL408	N2	CL613	F1	CL707	A4	CL999	G2	IC112	*D5	IC814	E4	R257	*P4	R439	*J5	R820	F5	RB115	*C4		
C204	P5	C504	K3	C701	B3	C851	E4	CL306	K4	CL409	N2	CL614	F1	CL709	A4	CL1000	J2	IC113	*C4	IC815	F4	R300	*K5	R440	K5	R822	E4	RB116	*C2		
C205	P5	C505	L3	C702	B3	C852	F4	CL307	L5	CL410	N2	CL615	F1	CL710	A4	CL1001	J2	IC114	*C4	IC817	K5	R301	*K4	R441	K4	R823	E4	RB117	*C2		
C206	N5	C506	J2	C703	A4	C853	E5	CL309	K5	CL411	M2	CL616	F1	CL711	A4	CL1002	J2	IC115	*C5	IC818	D5	R302	*K5	R442	G5	R824	E4	RB118	*D2		
C207	*P5	C507	K3	C704	A4	C863	*F4	CL310	P2	CL412	*M3	CL617	F1	CL720	B3	CL1003	J2	IC116	*D5	IC819	D5	R303	*L5	R443	G6	R825	E4	RB119	*D2		
C232	L6	C508	K3	C705	*B4	C864	*E4	CL311	P2	CL413	M2	CL618	F1	CL721	C3	CL1004	J2	IC117	*D4	IC822	D5	R304	*L5	R502	L2	R826	E4	RB120	*D2		
C233	L5	C509	K3	C706	*B3	C866	H3	CL312	P2	CL414	M2	CL619	G2	CL723	C4	CL1005	J2	IC118	*C5	IC823	D5	R305	*L5	R503	*H5	R827	F4	RB121	*C4		
C235	L5	C510	L3	C707	*A3	C912	G3	CL313	P2	CL415	M2	CL620	E3	CL724	C3	CL1006	J2	IC119	*D5	IC824	F5	R306	*K5	R600	F1	R828	F4	RB122	*C4		
C237	M5	C511	L3	C708	*A3	C913	G2	CL314	P2	CL416	M2	CL622	E4	CL725	B2	CL1007	J3	IC120	*C4	IC825	C5	R307	*L5	R601	F1	R829	E4	RB123	B5		
C250	*N3	C512	L2	C709	*A3	C914	G2	CL315	P2	CL417	M2	CL623	F3	CL726	A2	CL1008	H1	IC121	*C5	IC826	K5	R308	*K5	R603	F3	R830	F5	RB200	*N5		
C251	*N4	C513	L2	C710	*A3	C915	*H3	CL316	P2	CL418	L3	CL624	G3	CL730	A2	CL1009	J2	IC122	*C4	IC827	H4	R309	*L5	R605	*E4	R831	J5	RB201	*N5		
C252	*N3	C514	L3	C711	*A3	C916	*H3	CL317	P2	CL419	L3	CL625	F3	CL731	B2	CL1102	L5	IC123	*C5	IC829	D6	R310	*L5	R606	*E4	R834	K5	RB202	*N6		
C253	*N4	C515	*L2	C712	*A3	C917	*J2	CL318	P3	CL420	L3	CL626	G3	CL732	C2	CL1103	L5	IC124	D2	IC831	E4	R311	*L5	R607	G2	R835	K5	RB203	*N5		
C300	*K4	C516	*K2	C713	C3	C918	*G3	CL319	P3	CL421	L3	CL627	G3	CL733	B2	CL1104	M6	IC125	C4	IC834	F4	R312	P1	R608	*E2	R839	E5	RB204	*N5		
C301	*K4	C517	*K2	C714	C4	C919	*H1	CL320	P3	CL422	L2	CL628	E3	CL737	C3	CL1105	M6	IC200	*N5	IC902	H2	R313	P1	R609	*F1	R841	F5	RB205	*L5		
C302	*L4	C518	*K2	C715	B4	C920	*H3	CL321	N2	CL423	L2	CL629	E3	CL738	C2	CL1106	M6	IC201	*N5	IC903	*H2	R314	P1	R610	*F3	R851	*E4	RB206	*L5		
C303	*L4	C519	J2	C716	C4	C921	*J2	CL322	N3	CL424	L2	CL630	*F3	CL739	C4	CL1107	M6	IC202	*N5	IC904	*H2	R315	P1	R611	E3	R852	G4	RB207	*L5		
C304	L5	C520	J2	C717	*C4	C922	*G3	CL323	*N3	CL425	L2	CL631	*F3	CL740	A2	CL1108	M6	IC203	*N5	IC905	*H2	R316	P1	R612	G3	R854	J5	RB208	*M5		
C305	P2	C521	*L2	C718	*C3	C923	*H3	CL324	P3	CL426	L2	CL632	*F3	CL741	C2	CL1109	M6	IC204	*P5			R317	P1	R613	E3	R855	E5	RB209	*M5		
C306	*P3	C522	J3	C719	*C3	C924	*J3	CL325	N2	CL427	L2	CL633	*F3	CL800	H4	CL1110	M6	IC210	*L5	L100	B5	R318	P1	R614	G3	R856	*F5	RB210	*M5		
C307	P2	C523	J2	C720	*B3	C925	*G2	CL326	P3	CL428	L2	CL634	*F3	CL802	G4	CL1111	M6	IC212	*L5	L101	*D5	R319	P1	R616	*F3	R857	E5	RB250	N4		
C308	*P1	C524	J1	C721	*B3	C926	*J2	CL327	N1	CL429	L2	CL635	*F3	CL803	H4	CL1112	M6	IC214	*M5	L102	*B4	R320	P1	R617	*E3	R858	F5	RB251	N4		
C309	*N1	C525	J1	C722	*B3	C927	*G3	CL328	N2	CL430	L2	CL636	*F3	CL819	H4	CL1113	M6	IC216	*N5	L103	C5	R321	P1	R618	*G2	R859	F5	RB252	N4		
C310	*N1	C526	L3	C723	*B3	C928	*H2	CL329	N2	CL431	L2	CL637	*F3	CL823	H5	CL1116	*N5	IC217	*N6	L200	N5	R322	P3	R619	*E4	R860	F5	RB253	N3		
C311	*N2	C527	*L2	C724	*B3	C929	*H2	CL330	N2	CL432	J5	CL638	*F3	CL824	H5	CL1117	*P6	IC250	N4	L201	N5	R323	P3	R620	*E4	R861	F5	RB254	N3		
C312	*N3	C528	*L2	C725	B2	C930	*G2	CL331	N2	CL433	J4	CL639	*F3	CL825	J5	CL1118	*P5	IC251	N3	L204	L5	R324	P3	R715	A4	R862	F5	RB300	L5		
C313	*N3	C529	*K2	C726	B2	C931	*G2	CL332	N2	CL434	K4	CL640	G3	CL826	H5	CL1119	*P5	IC252	N3	L402	H5	R325	P3	R716	A4	R863	*E6	RB400	*H5		
C314	P1	C530	*K2	C727	A2	C932	G3	CL333	N2	CL435	J4	CL641	G3	CL835	E5	CL1120	*P5	IC253	N4	L405	G6	R326	P3	R717	A4	R903	G3	RB401	*G5		
C315	L3	C531	*J2	C728	A2	C933	*H3	CL334	N2	CL436	J4	CL642	G3	CL836	E5	CL1200	*L4	IC300	L4	L600	*F5	R327	P3	R718	A4	R904	G3	RB402	*G5		
C316	*L5	C532	*K2	C729	*B2	C934	*H2	CL335	N2	CL437	H4	CL643	G3	CL837	E5	CL1201	*L4	IC301	N2	L800	B5	R328	P3	R719	A4	R905	H1	RB403	*G5		
C317	*M4	C533	K2	C730	*B2	C935	*H2	CL336	N2	CL438	J4	CL644	G3	CL839	F5	CL1202	*M4	IC302	*L3	L801	A5	R329	N3	R720	A4	R906	H1	RB404	*H5		
C318	*M4	C534	K1	C731	*A1	C936	*H2	CL337	N2	CL439	H4	CL645	G3	CL841	E5	CL1203	*M4	IC303	L5	L802	A5	R330	P3	R721	B4	R907	H1	RB500	*J2		
C320	*N1	C535	K1	C732	*A1	C937	*G3	CL338	N2	CL440	J4	CL646	G3	CL844	D5	CL1204	K3	IC304	M4	L803	A5	R331	P3	R722	A4	R908	H1	RB501	K1		
C321	*N2	C536	K1	C733	*A2	C938	*H2	CL339	N2	CL441	H4	CL647	G3	CL847	D6	CL1205	K3	IC305	M4	L804	*E5	R332	P3	R723	A4	R909	H1	RB502	L2		
C322	*P1	C537	L1	C734	*A2	C939	*H3	CL340	N2	CL442	J4	CL648	G3	CL848	D6	CL1206	K3	IC307	*N1	L806	C6	R333	P3	R724	A4	R910	G2	RB503	K1		
C323	*N3	C538	L1	C735	*A1			CL341	N2	CL443	H4	CL649	G3	CL849	D6	CL1207	K3	IC308	*N2	L807	F5	R334	N1	R725	A4	R911	J2	RB504	L2		
C324	*P2	C539	L1	C736	*A2	CL100	N6	CL342	N2	CL444	J4	CL650	E4	CL850	D6	CL1208	K3	IC309	*P2	L808	C5	R335	N1	R726	A4	R912	*H3	RB505	L2		
C325	*N2	C540	L1	C737	C2	CL101	N6	CL343	N2	CL445	H4	CL651	E3	CL851	L6	CL1209	K3	IC310	J3			R336	*M3	R727	B4	R913	*H2	RB506	M2		
C326	*P2	C541	M2	C738	C2	CL102	N6	CL344	N2	CL446	J4	CL652	E3	CL852	K6	CL1210	K3	IC311	J3	Q200	L5	R337	*M3	R728	B4	R914	*H2	RB507	M1		
C327	*P2	C542	L1	C739	B2	CL103	N6	CL345	N2	CL447	H4	CL653	E4	CL853	K6	CL1211	K3	IC312	M5	Q400	G6	R338	*M4	R729	B4	R915	*H2	RB508	M1		
C328	P2	C543	M1	C740	C2	CL104	N6	CL346	N2	CL448	J4	CL654	E4	CL854	K6	CL1212	*M4	IC400	M2	Q800	*E6	R339	*M4	R738	B3	R1004	B2	RB509	M1		
C329	J3	C544	M1	C741	*C2	CL105	N6	CL347	N2	CL449	H4	CL655	G5	CL855	K6	CL1216	K4	IC401	*K5	Q801	*B5	R342	*M3	R739	B3	R1005	B1	RB510	M1		
C330	J3	C545	N1	C742	*C2	CL106	*P5	CL348	N2	CL450	J4	CL656	G5	CL856	K6	CL1217	L3	IC402	*K5	Q802	B5	R343	*M3	R740	B3	R1006	B2	RB511	M1		
C331	L3	C546	M1	C743	*C1	CL107	D6	CL349	N2	CL451	H4	CL657	G5	CL857	K6	CL1218	L3	IC404	*J5			R344	*M4	R748	B4	R1014	B3	RB512	N1		
C332	*L4	C547	N1	C744	*B1	CL108	D6	CL350	N2	CL452	J4	CL658	H5	CL858	K6	CL1219	K4	IC406	*K5	R100	*P5	R345	*M4	R749	B4	R1015	B2	RB513	J1		
C333	*L4	C548	N1	C745	*B2	CL109	D6	CL351	N2	CL453	J5	CL659	H5	CL860	D5	CL1220	K4	IC407	J4	R101	*P5	R348	P2	R750	B4	R1016	B3	RB514	K2		
C334	*K4	C549	K2	C746	*B2	CL110	D6	CL352	N2	CL454	J5	CL660	H5	CL870	J5	CL1221	L5	IC408	*G5	R102	*P5	R349	*K4	R751	B4	R1017	B2	RB515	K1		
C335	*K4	C550	J1	C747	*B1	CL112	C4	CL353	N2	CL455	J5	CL661	H5	CL871	H5	CL1222	L3	IC410	*G5	R103	*E5	R350	*K3	R752	B4	R1018	B3	RB516	*H4		
C336	*M5	C551	K1	C748	*B2	CL113	B4	CL356	N2	CL457	G6	CL662	H5	CL872	D5	CL1223	L3	IC412	*H5	R105	*E5	R351	*K4	R753	B4	R1019	B3	RB517	*H5		
C337	*M5	C552	K1	C800	J3	CL114	B4	CL360	*N3	CL459	J5	CL663	H5	CL873	D5	CL1224	L3	IC413	J6	R106	*P5	R352	*K4	R754	C4	R1020	C3	RB518	*H5		
C338	*N5	C600	*E2	C801	*H4	CL115	B4	CL361	*N3	CL460	H4	CL664	H5	CL874	J5			IC500	K2	R107	*P5	R353	*H4	R755	C4	R1021	C2	RB700	D3		
C339	*M4	C601	*F2	C802	*H4	CL116	B4	CL362	*N3	CL500	J3	CL665	G5	CL875	H4	CN1	P4	IC501	*J1	R108	*E6	R354	*H4	R756	B4	R1022	B2	RB701	C3		
C400	M2	C602	*E2	C803	*H5	CL117	B4	CL363	N2	CL501	J3	CL666	G5	CL876	J4	CN13	M6	IC502	*J1	R109	*E6	R355	*H4	R757	B4	R1023	B2	RB702	C3		
C401	*M3	C603	*E2	C804	*G4	CL118	B4	CL364	N2	CL502	J3	CL667	G5	CL877	H4	CN14	G6	IC503	*L2	R110	*D6	R356	*M4	R758	C4	R1024	C2	RB703	C3		
C402	*M2	C604	*E3	C805	*H5	CL119	B4	CL365	*M4	CL503	J3	CL668	G5	CL878	J4	CN15	C6	IC504	*K2	R111	*D6	R357	L3	R759	C4	R1025	C3	RB704	D3		
C403	*M2	C605	*F3	C806	*H4	CL120	D5	CL366	*M4	CL504	J3	CL669	G5	CL879	J4	CN16	D1	IC505	*K2	R112	*D6	R358	L3	R760	C4	R1026	C2	RB705	D3		
C404	*K5	C606	*E4	C807	*H4	CL121	C5	CL367	*M4	CL505	J3	CL670	G5	CL880	G5			IC506	*K1	R113	*D5	R359	*K4	R761	C4	R1027	C3	RB706	D3		
C405	*M2	C607	F5	C808	*G4	CL122	C4	CL368	*M4	CL506	J3	CL671	G5	CL881	H4	E100	C5	IC507	*L1	R114	*D5	R400	*K5	R762	C4	R1028	C2	RB707	D3		
C406	*M2	C608	*F5	C809	*B5	CL127	C2	CL369	*M4	CL507	J3	CL672	G5	CL882	H4	E200	M1	IC508	*M1	R115	E5	R401	*M2	R771	C3	R1037	A4	RB708	D3		
C407	*M3	C609	*F5	C810	*B6	CL131	D2	CL370	*M4	CL508	J3	CL673	G5	CL883	H4	E300	P1	IC509	*M1	R116	E5	R402	*K6	R772	C3	R1038	B4	RB709	*A4		
C408	*M3	C610	*E5	C811	*A6	CL132	D2	CL371	K5	CL509	J2	CL674	G5	CL884	H4	E400	J5	IC510	*K1	R117	*C2	R403	*K6	R773	C3	R1039	A4	RB710	*B4		

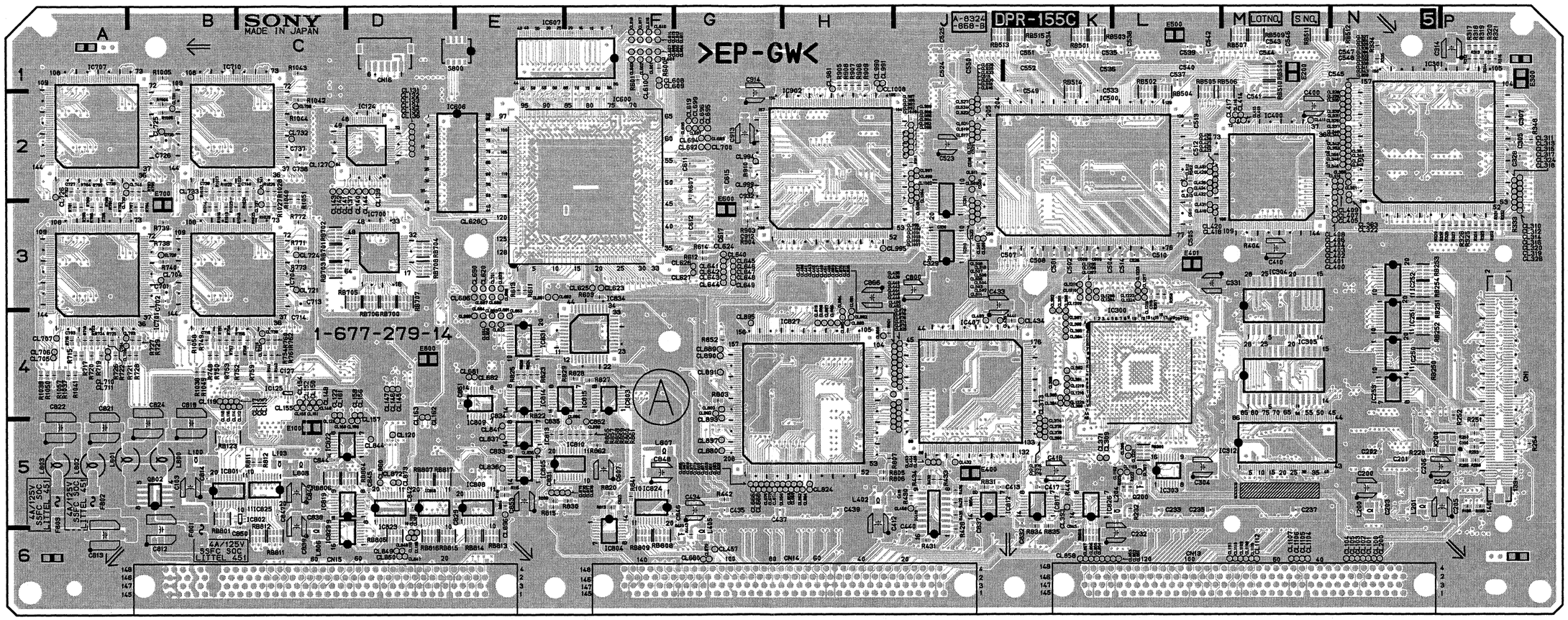

Components locations list; previous page

DPR-155 -A SIDE-
SUFFIX: -14

DPR-155
SUFFIX: -14

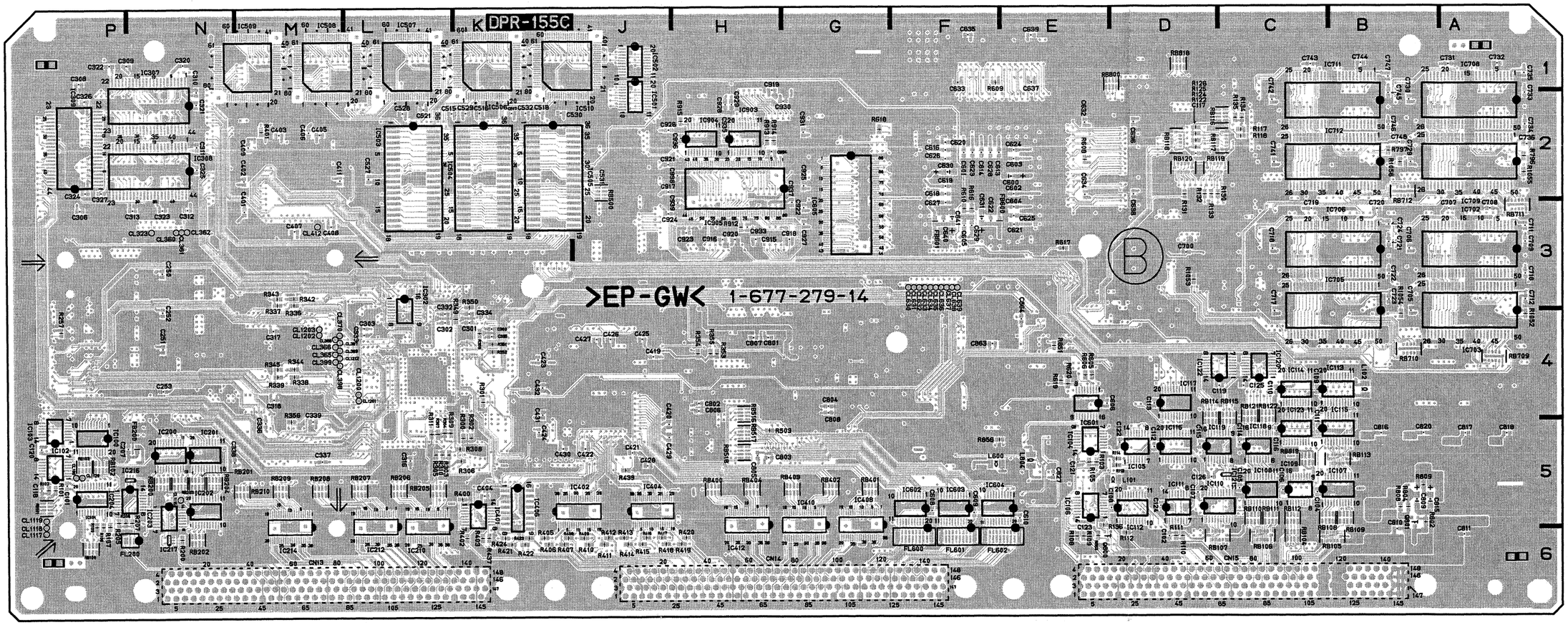

DPR-155 -B SIDE-
SUFFIX: -14

4-25 (b)

DPR-155 (1-677-279-13)

C100	P5	C409	*M2	C611	G2	C813	A6	CL135	D2	CL375	K5	CL512	L2	CL677	E5	CL887	H4	E600	G3	IC601	*B4	R125	*D2	R407	*K6	R784	A2	R1051	C2	RB807	D5
C101	*P5	C410	M3	C612	G3	C814	B5	CL136	D2	CL376	K5	CL513	L2	CL678	E5	CL888	H4	E700	B3	IC602	*F5	R126	*D2	R408	*K6	R785	A3	R1052	*A4	RB808	F6
C102	*D6	C411	*M2	C613	*F2	C815	*B5	CL137	D2	CL377	K5	CL514	J3	CL679	G6	CL889	G4	E800	D4	IC603	*F5	R130	*D2	R409	*J6	R786	A3	R1053	*D3	RB809	F6
C103	B5	C412	H5	C614	*F2	C816	*B5	CL139	D2	CL378	K5	CL515	J2	CL680	G6	CL890	G4			IC604	*E5	R131	*D2	R410	*J6	R787	B3	R1054	*B4	RB810	K6
C104	*C5	C413	J5	C615	G2	C817	*A5	CL140	D2	CL379	K5	CL516	J2	CL681	E4	CL891	G4	F800	B5	IC605	*G2	R132	*D2	R411	*J6	R788	A2	R1055	*A2	RB811	C6
C105	*C5	C415	H5	C616	*F2	C818	*A5	CL141	C2	CL380	K5	CL517	J2	CL682	E4	CL892	G4	F801	A5	IC606	D2	R133	*D2	R412	*J6	R789	A2	R1056	*B2	RB812	C6
C106	*C5	C417	K5	C617	G3	C819	B5	CL142	C2	CL381	K4	CL518	J2	CL683	E4	CL893	G4	F802	A5	IC607	F1	R134	*C2	R413	*J6	R790	A2	R1057	A4	RB813	E6
C107	*D5	C418	K5	C618	*F2	C820	B5	CL143	C2	CL382	K4	CL519	J2	CL684	E4	CL894	F5	F803	A5	IC700	D3	R135	*C2	R414	*J6	R791	A2	R1058	B4	RB814	E6
C108	*D5	C419	*J4	C619	*F2	C821	A5	CL144	D2	CL384	K4	CL520	J2	CL685	E4	CL895	G4			IC701	A3	R136	*E5	R415	*J6	R792	A3			RB815	D6
C109	*C4	C420	*J5	C620	*F2	C822	A5	CL145	D4	CL385	K4	CL521	J2	CL686	E3	CL896	E5	FB200	*N5	IC702	*A3	R138	P5	R416	*J6	R793	B2	RB100	*P6	RB816	D6
C110	*C4	C421	*J5	C621	*E3	C823	F5	CL146	D4	CL386	K4	CL522	J2	CL687	E3	CL897	G5	FB600	*P3	IC703	*A3	R139	P5	R417	*J6	R794	B3	RB101	*P5	RB817	D5
C111	*C5	C422	*J5	C622	*F3	C827	*E5	CL147	D4	CL390	K4	CL523	J2	CL688	E3	CL981	H1	FB601	*P3	IC704	B3	R140	C4	R418	*J6	R795	B2	RB102	*P5	RB818	*D1
C112	*D5	C423	*K4	C623	*F2	C829	D5	CL148	C4	CL391	K4	CL524	J2	CL689	E3	CL982	J2			IC705	*B3	R141	C4	R419	*H6	R796	*A2	RB103	*P5	RB819	*C5
C113	*D4	C424	*K5	C624	*E2	C831	E5	CL149	C4	CL392	K4	CL525	J2	CL690	E3	CL983	J2	FL200	*N6	IC706	*B3	R200	*N6	R420	*H6	R797	*B2	RB104	*C6		
C114	*C5	C425	*J4	C625	*E3	C832	K5	CL150	C4	CL393	K5	CL526	J2	CL691	E4	CL984	J2	FL600	*F6	IC707	A2	R205	*P5	R421	*K6	R801	H4	RB105	*B6	S800	E1
C115	*D5	C426	*J4	C626	*F2	C833	E5	CL151	C4	CL394	K4	CL527	J2	CL692	G2	CL985	J2	FL601	*F6	IC708	*A1	R206	*P5	R422	*K6	R803	G4	RB106	*C6		
C116	*C5	C427	*J4	C627	*F3	C834	E4	CL152	C4	CL395	K4	CL600	F1	CL693	G2	CL986	J2	FL602	*E6	IC709	*A2	R207	*N5	R423	*K6	R805	H5	RB107	*D6	X200	P5
C117	*D2	C428	*J5	C628	*F2	C835	E4	CL153	C4	CL396	K4	CL601	F1	CL694	G2	CL987	J2			IC710	B2	R220	N5	R424	*K6	R806	H5	RB108	*C5		
C118	*P5	C429	*J5	C629	*F3	C837	J5	CL154	C4	CL397	K4	CL602	F1	CL695	G2	CL988	J2	IC100	*P5	IC711	*B1	R222	L5	R428	J6	R807	H5	RB109	*B5	*:B SIDE	
C119	*C4	C430	*K5	C630	*F2	C838	C5	CL155	C4	CL398	*M4	CL603	F1	CL696	G2	CL989	J2	IC101	*P5	IC712	*B2	R223	L5	R429	J5	R811	C5	RB110	*C5		
C120	*P5	C431	*K4	C631	*F3	C839	C5	CL156	D4	CL399	*M4	CL604	F1	CL697	G2	CL990	H1	IC102	*P5	IC801	B5	R232	L5	R430	J5	R812	C5	RB111	*C5		
C121	*E5	C432	*K4	C632	*E2	C842	D5	CL157	D5	CL400	N3	CL605	F1	CL698	G2	CL991	H1	IC103	*P5	IC802	C5	R250	P5	R431	J6	R813	F5	RB112	*C5		
C122	*D5	C433	J3	C633	*F1	C843	K5	CL158	D4	CL401	N3	CL606	F1	CL699	G2	CL992	J2	IC104	*E5	IC803	F4	R251	P5	R432	J5	R814	E5	RB113	*B5		
C123	*E5	C434	G5	C634	*E2	C844	C5	CL159	D5	CL402	N3	CL607	F1	CL700	G2	CL993	J2	IC105	*D5	IC804	F5	R252	P4	R433	J5	R815	E5	RB114	*D4		
C124	*D5	C435	G5	C635	*F1	C845	D5	CL160	C5	CL403	N3	CL608	F1	CL701	E3	CL994	G2	IC106	*E5	IC805	E5	R253	P5	R434	J5	R820	F5	RB115	*C4		
C125	*C4	C437	G5	C636	*D2	C846	F5	CL161	C4	CL404	N2	CL609	F1	CL703	A4	CL995	H3	IC107	*C5	IC808	E5	R254	P5	R435	J5	R822	E4	RB116	*C2		
C126	*D5	C439	H5	C637	*E1	C847	C5	CL162	D4	CL405	N2	CL610	F1	CL704	B3	CL996	J2	IC108	*C5	IC809	E4	R255	P5	R436	J5	R823	E4	RB117	*C2		
C127	C4	C440	J6	C638	*D2	C848	F5	CL163	D4	CL406	N2	CL611	F1	CL705	A4	CL997	J2	IC109	*C5	IC810	E5	R256	P5	R437	*K6	R824	E4	RB118	*D2		
C200	N5	C500	J2	C639	*E1	C849	C5	CL200	N6	CL407	N2	CL612	F1	CL706	A4	CL998	J2	IC110	*D5	IC812	J5	R257	*P4	R439	*J5	R825	E4	RB119	*D2		
C201	N5	C501	K3	C640	*F3	C850	C5	CL305	L5	CL408	N2	CL613	F1	CL707	A4	CL999	G2	IC111	*D5	IC813	E5	R300	*K5	R440	K5	R826	E4	RB120	*D2		
C202	N5	C502	K3	C641	*F3	C851	E4	CL306	K4	CL409	N2	CL614	F1	CL709	A4	CL1000	J2	IC112	*D5	IC814	E4	R301	*K4	R441	K4	R827	F4	RB121	*C4		
C203	N5	C503	K3	C700	*D3	C852	F4	CL307	L5	CL410	N2	CL615	F1	CL710	A4	CL1001	J2	IC113	*C4	IC815	F4	R302	*K5	R442	G5	R828	F4	RB122	*C4		
C204	P5	C504	K3	C701	B3	C853	E5	CL309	K5	CL411	M2	CL616	F1	CL711	A4	CL1002	J2	IC114	*C4	IC817	K5	R303	*L5	R443	G6	R829	E4	RB123	B5		
C205	P5	C505	L3	C702	B3	C863	*F4	CL310	P2	CL412	*M3	CL617	F1	CL720	B3	CL1003	J2	IC115	*C5	IC818	D5	R304	*L5	R502	L2	R830	F5	RB200	*N5		
C206	N5	C506	J2	C703	A4	C864	*E4	CL311	P2	CL413	M2	CL618	F1	CL721	C3	CL1004	J2	IC116	*D5	IC819	D5	R305	*L5	R503	*H5	R831	J5	RB201	*N5		
C207	*P5	C507	K3	C704	A4	C866	H3	CL312	P2	CL414	M2	CL619	G2	CL723	C4	CL1005	J2	IC117	*D4	IC822	D5	R306	*K5	R600	F1	R834	K5	RB202	*N6		
C232	L6	C508	K3	C705	*B4	C912	G3	CL313	P2	CL415	M2	CL620	E3	CL724	C3	CL1006	J2	IC118	*C5	IC823	D5	R307	*L5	R601	F1	R835	K5	RB203	*N5		
C233	L5	C509	K3	C706	*B3	C913	G2	CL314	P2	CL416	M2	CL622	E4	CL725	B2	CL1007	J3	IC119	*D5	IC824	F5	R308	*K5	R603	F3	R839	E5	RB204	*N5		
C235	L5	C510	L3	C707	*A3	C914	G2	CL315	P2	CL417	M2	CL623	F3	CL726	A2	CL1008	H1	IC120	*C4	IC825	C5	R309	*L5	R605	*E4	R841	F5	RB205	*L5		
C237	M5	C511	L3	C708	*A3	C915	*H3	CL316	P2	CL418	L3	CL624	G3	CL730	A2	CL1009	J2	IC121	*C5	IC826	K5	R310	*L5	R606	*E4	R851	*E4	RB206	*L5		
C250	*N3	C512	L2	C709	*A3	C916	*H3	CL317	P2	CL419	L3	CL625	F3	CL731	B2	CL1102	L5	IC122	*C4	IC827	H4	R311	*L5	R607	G2	R852	G4	RB207	*L5		
C251	*N4	C513	L2	C710	*A3	C917	*J2	CL318	P3	CL420	L3	CL626	G3	CL732	C2	CL1103	L5	IC123	*C5	IC829	D6	R312	P1	R608	*E2	R854	J5	RB208	*M5		
C252	*N3	C514	L3	C711	*A3	C918	*G3	CL319	P3	CL421	L3	CL627	G3	CL733	B2	CL1104	M6	IC124	D2	IC831	E4	R313	P1	R609	*F1	R855	E5	RB209	*M5		
C253	*N4	C515	*L2	C712	*A3	C919	*H1	CL320	P3	CL422	L2	CL628	E3	CL737	C3	CL1105	M6	IC125	C4	IC834	F4	R314	P1	R610	*F3	R856	*F5	RB210	*M5		
C300	*K4	C516	*K2	C713	C3	C920	*H3	CL321	N2	CL423	L2	CL629	E3	CL738	C2	CL1106	M6	IC200	*N5	IC902	H2	R315	P1	R611	E3	R857	E5	RB250	N4		
C301	*K4	C517	*K2	C714	C4	C921	*J2	CL322	N3	CL424	L2	CL630	*F3	CL739	C4	CL1107	M6	IC201	*N5	IC903	*H2	R316	P1	R612	G3	R858	F5	RB251	N4		
C302	*L4	C518	*K2	C715	B4	C922	*G3	CL323	*N3	CL425	L2	CL631	*F3	CL740	A2	CL1108	M6	IC202	*N5	IC904	*H2	R317	P1	R613	E3	R859	F5	RB252	N4		
C303	*L4	C519	J2	C716	C4	C923	*H3	CL324	P3	CL426	L2	CL632	*F3	CL741	C2	CL1109	M6	IC203	*N5	IC905	*H2	R318	P1	R614	G3	R860	F5	RB253	N3		
C304	L5	C520	J2	C717	*C4	C924	*J3	CL325	N2	CL427	L2	CL633	*F3	CL800	H4	CL1110	M6	IC204	*P5			R319	P1	R616	*F3	R861	F5	RB254	N3		
C305	P2	C521	*L2	C718	*C3	C925	*G2	CL326	P3	CL428	L2	CL634	*F3	CL802	G4	CL1111	M6	IC210	*L5	L100	B5	R320	P1	R617	*E3	R862	F5	RB300	L5		
C306	*P3	C522	J3	C719	*C3	C926	*J2	CL327	N1	CL429	L2	CL635	*F3	CL803	H4	CL1112	M6	IC212	*L5	L101	*D5	R321	P1	R618	*G2	R863	*E6	RB400	*H5		
C307	P2	C523	J2	C720	*B3	C927	*G3	CL328	N2	CL430	L2	CL636	*F3	CL819	H4	CL1113	M6	IC214	*M5	L102	*B4	R322	P3	R619	*E4	R903	G3	RB401	*G5		
C308	*P1	C524	J1	C721	*B3	C928	*H2	CL329	N2	CL431	L2	CL637	*F3	CL823	H5	CL1116	*N5	IC216	*N5	L103	C5	R323	P3	R620	*E4	R904	G3	RB402	*G5		
C309	*N1	C525	J1	C722	*B3	C929	*H2	CL330	N2	CL432	J5	CL638	*F3	CL824	H5	CL1117	*P6	IC217	*N6	L200	N5	R324	P3	R715	A4	R905	H1	RB403	*G5		
C310	*N1	C526	L3	C723	*B3	C930	*G2	CL331	N2	CL433	J4	CL639	*F3	CL825	J5	CL1118	*P5	IC250	N4	L201	N5	R325	P3	R716	A4	R906	H1	RB404	*H5		
C311	*N2	C527	*L2	C724	*B3	C931	*G2	CL332	N2	CL434	K4	CL640	G3	CL826	H5	CL1119	*P5	IC251	N3	L204	L5	R326	P3	R717	A4	R907	H1	RB500	*J2		
C312	*N3	C528	*L2	C725	B2	C932	G3	CL333	N2	CL435	J4	CL641	G3	CL835	E5	CL1120	*P5	IC252	N3	L402	H5	R327	P3	R718	A4	R908	H1	RB501	K1		
C313	*N3	C529	*K2	C726	B2	C933	*H3	CL334	N2	CL436	J4	CL642	G3	CL836	E5	CL1200	*L4	IC253	N4	L405	G6	R328	P3	R719	A4	R909	H1	RB502	L2		
C314	P1	C530	*K2	C727	A2	C934	*H2	CL335	N2	CL437	H4	CL643	G3	CL837	E5	CL1201	*L4	IC300	L4	L600	*F5	R329	N3	R720	A4	R910	G2	RB503	K1		
C315	L3	C531	*J2	C728	A2	C935	*H2	CL336	N2	CL438	J4	CL644	G3	CL839	F5	CL1202	*M4	IC301	N2	L800	B5	R330	P3	R721	B4	R911	J2	RB504	L2		
C316	*L5	C532	*K2	C729	*B2	C936	*H2	CL337	N2	CL439	H4	CL645	G3	CL841	E5	CL1203	*M4	IC302	*L3	L801	A5	R331	P3	R722	A4	R912	*H3	RB505	L2		
C317	*M4	C533	K2	C730	*B2	C937	*G3	CL338	N2	CL440	J4	CL646	G3	CL844	D5	CL1204	K3	IC303	L5	L802	A5	R332	P3	R723	A4	R913	*H2	RB506	M2		
C318	*M4	C534	K1	C731	*A1	C938	*H2	CL339	N2	CL441	H4	CL647	G3	CL847	D6	CL1205	K3	IC304	M4	L803	A5	R333	P3	R724	A4	R914	*H2	RB507	M1		
C320	*N1	C535	K1	C732	*A1	C939	*H3	CL340	N2	CL442	J4	CL648	G3	CL848	D6	CL1206	K3	IC305	M4	L804	*E5	R334	N1	R725	A4	R915	*H2	RB508	M1		
C321	*N2	C536	K1	C733	*A2			CL341	N2	CL443	H4	CL649	G3	CL849	D6	CL1207	K3	IC307	*N1	L806	C6	R335	N1	R726	A4	R1004	B2	RB509	M1		
C322	*P1	C537	L1	C734	*A2	CL100	N6	CL342	N2	CL444	J4	CL650	E4	CL850	D6	CL1208	K3	IC308	*N2	L807	F5	R336	*M3	R727	B4	R1005	B1	RB510	M1		
C323	*N3	C538	L1	C735	*A1	CL101	N6	CL343	N2	CL445	H4	CL651	E3	CL851	L6	CL1209	K3	IC309	*P2	L808	C5	R337	*M3	R728	B4	R1006	B2	RB511	M1		
C324	*P2	C539	L1	C736	*A2	CL102	N6	CL344	N2	CL446	J4	CL652	E3	CL852	K6	CL1210	K3	IC310	J3			R338	*M4	R729	B4	R1014	B3	RB512	N1		
C325	*N2	C540	L1	C737	C2	CL103	N6	CL345	N2	CL447	H4	CL653	E4	CL853	K6	CL1211	K3	IC311	J3	Q200	L5	R339	*M4	R738	B3	R1015	B2	RB513	J1		
C326	*P2	C541	M2	C738	C2	CL104	N6	CL346	N2	CL448	J4	CL654	E4	CL854	K6	CL1212	*M4	IC312	M5	Q400	G6	R342	*M3	R739	B3	R1016	B3	RB514	K2		
C327	*P2	C542	L1	C739	B2	CL105	N6	CL347	N2	CL449	H4	CL655	G5	CL855	K6	CL1216	K4	IC400	M2	Q800	*E6	R343	*M3	R740	B3	R1017	B2	RB515	K1		
C328	P2	C543	M1	C740	C2	CL106	*P5	CL348	N2	CL450	J4	CL656	G5	CL856	K6	CL1217	L3	IC401	*K5			R344	*M4	R748	B4	R1018	B3	RB516	*H4		
C329	J3	C544	M1	C741	*C2	CL107	D6	CL349	N2	CL451	H4	CL657	G5	CL857	K6	CL1218	L3	IC402	*K5	R100	*P5	R345	*M4	R749	B4	R1019	B3	RB517	*H5		
C330	J3	C545	N1	C742	*C2	CL108	D6	CL350	N2	CL452	J4	CL658	H5	CL858	K6	CL1219	K4	IC404	*J5	R101	*P5	R348	P2	R750	B4	R1020	C3	RB518	*H5		
C331	L3	C546	M1	C743	*C1	CL109	D6	CL351	N2	CL453	J5	CL659	H5	CL860	D5	CL1220	K4	IC406	*K5	R102	*P5	R349	*K4	R751	B4	R1021	C2	RB700	D3		
C332	*L4	C547	N1	C744	*B1	CL110	D6	CL352	N2	CL454	J5	CL660	H5	CL870	J5	CL1221	L5	IC407	J4	R103	*E5	R350	*K3	R752	B4	R1022	B2	RB701	C3		
C333	*L4	C548	N1	C745	*B2	CL112	C4	CL353	N2	CL455	J5	CL661	H5	CL871	H5	CL1222	L3	IC408	*G5	R105	*E5	R351	*K4	R753	B4	R1023	B2	RB702	C3		
C334	*K4	C549	K2	C746	*B2	CL113	B4	CL356	N2	CL457	G6	CL662	H5	CL872	D5	CL1223	L3	IC410	*G5	R106	*P5	R352	*K4	R754	C4	R1024	C2	RB703	C3		
C335	*K4	C550	J1	C747	*B1	CL114	B4	CL360	*N3	CL459	J5	CL663	H5	CL873	D5	CL1224	L3	IC412	*H5	R107	*P5	R353	*H4	R755	C4	R1025	C3	RB704	D3		
C336	*M5	C551	K1	C748	*B2	CL115	B4	CL361	*N3	CL460	H4	CL664	H5	CL874	J5			IC413	J6	R108	*E6	R354	*H4	R756	B4	R1026	C2	RB705	D3		
C337	*M5	C552	K1	C800	J3	CL116	B4	CL362	*N3	CL500	J3	CL665	G5	CL875	H4	CN1	P4	IC500	K2	R109	*E6	R355	*H4	R757	B4	R1027	C3	RB706	D3		
C338	*N5	C600	*E2	C801	*H4	CL117	B4	CL363	N2	CL501	J3	CL666	G5	CL876	J4	CN13	M6	IC501	*J1	R110	*D6	R356	*M4	R758	C4	R1028	C2	RB707	D3		
C339	*M4	C601	*F2	C802	*H4	CL118	B4	CL364	N2	CL502	J3	CL667	G5	CL877	H4	CN14	G6	IC502	*J1	R111	*D6	R357	L3	R759	C4	R1037	A4	RB708	D3		
C400	M2	C602	*E2	C803	*H5	CL119	B4	CL365	*M4	CL503	J3	CL668	G5	CL878	J4	CN15	C6	IC503	*L2	R112	*D6	R358	L3	R760	C4	R1038	B4	RB709	*A4		
C401	*M3	C603	*E2	C804	*G4	CL120	D5	CL366	*M4	CL504	J3	CL669	G5	CL879	J4	CN16	D1	IC504	*K2	R113	*D5	R359	*K4	R761	C4	R1039	A4	RB710	*B4		
C402	*M2	C604	*E3	C805	*H5	CL121	C5	CL367	*M4	CL505	J3	CL670	G5	CL880	G5			IC505	*K2	R114	*D5	R400	*K5	R762	C4	R1040	C2	RB711	*A3		
C403	*M2	C605	*F3	C806	*H4	CL122	C4	CL368	*M4	CL506	J3	CL671	G5	CL881	H4	E100	C5	IC506	*K1	R115	E5	R401	*M2	R771	C3	R1041	A4	RB712	*B2		
C404	*K5	C606	*E4	C807	*H4	CL127	C2	CL369	*M4	CL507	J3	CL672	G5	CL882	H4	E200	M1	IC507	*L1	R116	E5	R402	*K6	R772	C3	R1042	C2	RB800	*D1		
C405	*M2	C607	F5	C808	*G4	CL131	D2	CL370	*M4	CL508	J3	CL673	G5	CL883	H4	E300	P1	IC508	*M1	R117	*C2	R403	*K6	R773	C3	R1043	C1	RB801	B5		
C406	*M2	C608	*F5	C810	*B6	CL132	D2	CL371	K5	CL509	J2	CL674	G5	CL884	H4	E400	J5	IC509	*M1	R118	*C2	R404	M3	R781	A3	R1044	C2	RB804	D5		
C407	*M3	C609	*F5	C811	*A6	CL133	D2	CL373	K5	CL510	J3	CL675	E5	CL885	H4	E401	L3	IC510	*K1	R122	*D2	R405	*K6	R782	A2	R1049	B4	RB805	D6		
C408	*M3	C610	*E5	C812	B6	CL134	D2	CL374	K5	CL511	J2	CL676	F5	CL886	H4	E500	L1	IC600	F2	R124	*D2	R406	*K6	R783	A3	R1050	A4	RB806	C5		

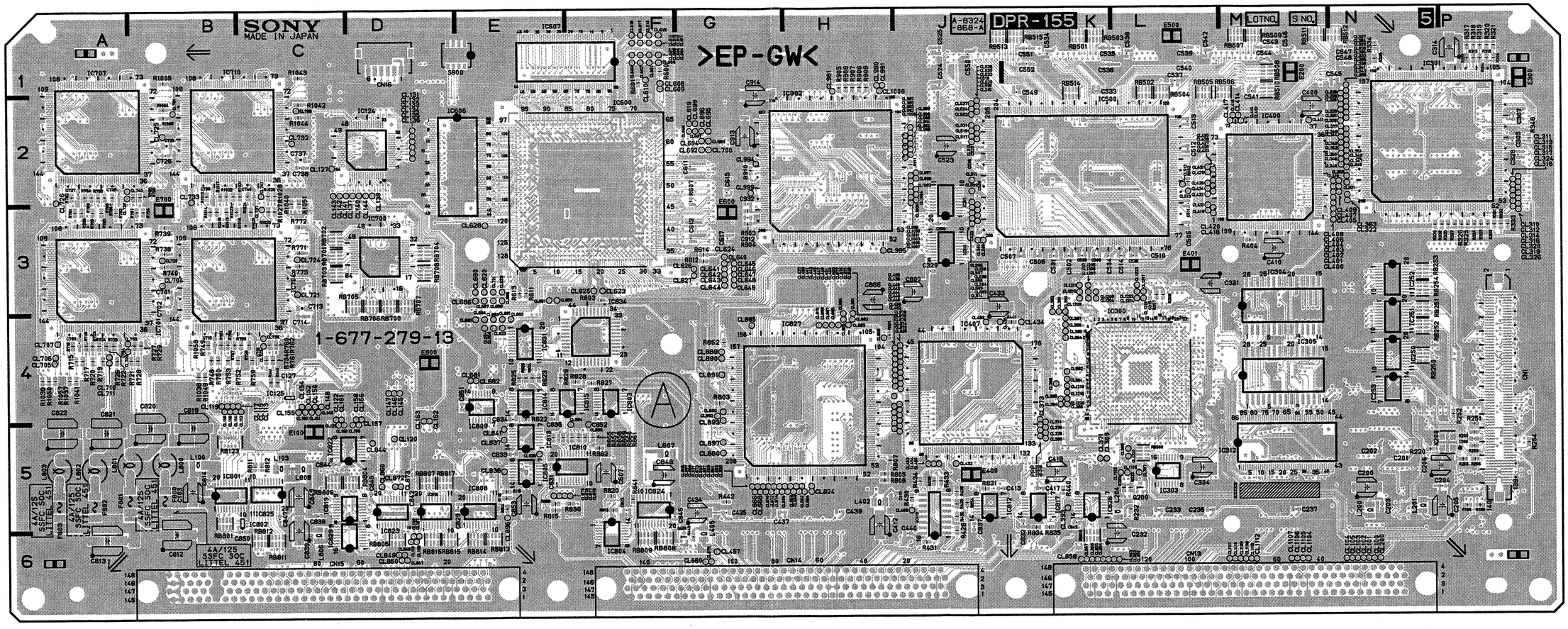

Components locations list; previous page

DPR-155 -A SIDE-
SUFFIX: -13

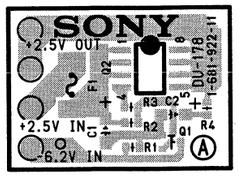

DU-178 -A SIDE-
SUFFIX: -11

DPR-155 SUFFIX: -13

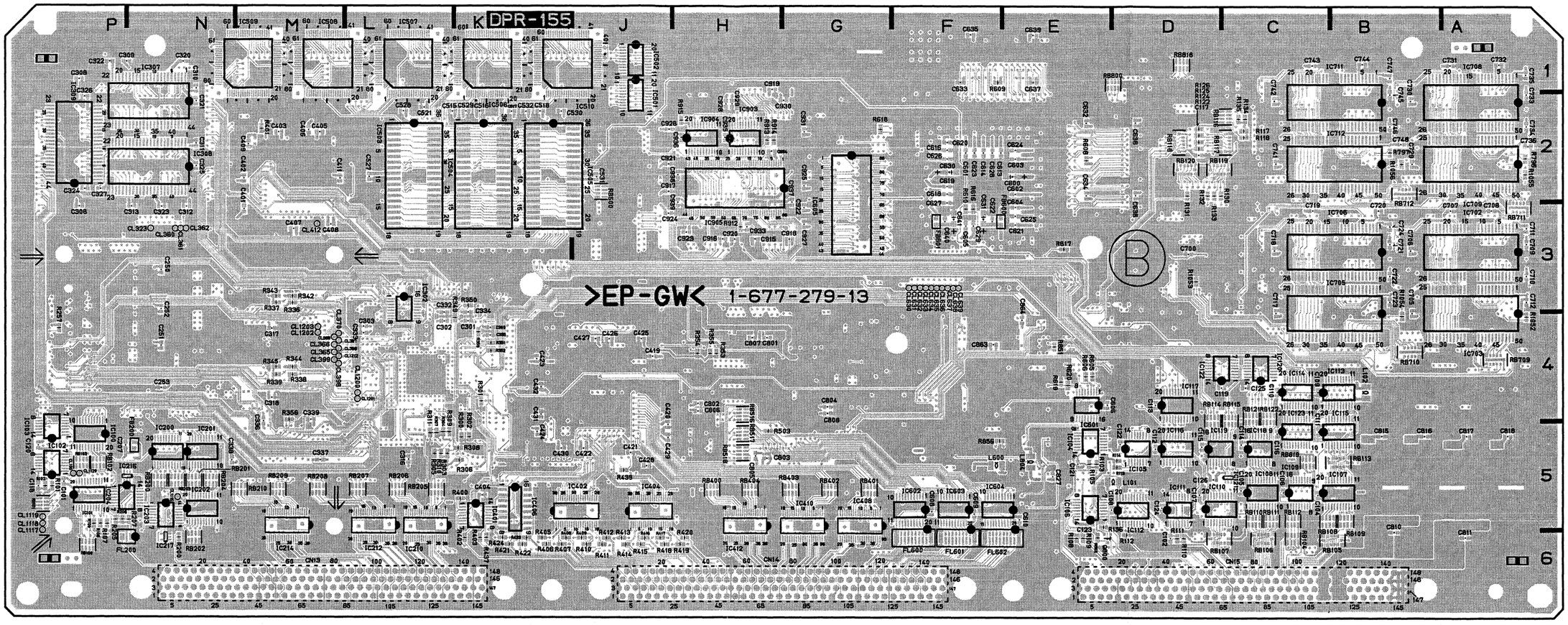

DPR-155 -B SIDE-
SUFFIX: -13

4-25 (a)

DPR-194, DPR-195

DPR-194 (1-680-647-11)

C100	B1	CL160	*B2
C101	B1	CL161	*B2
C102	A1	CL162	*B2
C103	A1	CL163	*A2
C104	B1	CL164	*B2
C105	B2	CL165	*B2
C106	B1	CL166	*B2
C107	A1	CL167	*B2
C108	A2	CL168	*B2
C109	A2	CL169	*B2
C110	B3	CL170	*B2
C111	B3	CL171	*B2
C112	B2	CL172	*B2
C113	B1	CL173	*A1
C114	A1	CL174	*A1
C115	*C3	CL175	*A1
C116	*C2	CL176	*A1
C117	*C2	CL177	*B2
C118	*B2	CL178	*B2
C119	*A2	CL179	*B2
C120	*A3	CL180	*B2
C121	*B1	CL181	*B2
C122	*B1	CL182	*B2
C123	B1	CL183	*B2
C124	B1	CL184	*B2
C127	C3	CL185	*A1
C128	*C3	CL186	*B2
C129	*C3	CL187	*B3
C130	A2	CL188	*B3
C131	A3	CL189	*B3
C132	B3	CL190	*B3
		CL191	*B3
CL100	*B2	CL192	*A2
CL101	*B2	CL193	*A2
CL102	*B2	CL194	*A3
CL103	*B2	CL195	*B3
CL104	*B2	CL201	*C2
CL105	*B1	CL202	*C1
CL106	*B1	CL203	*C1
CL107	*B1	CL204	*C1
CL108	*B1		
CL109	*B1	CN1	C2
CL110	*B2	CN2	*B3
CL111	*B1		
CL112	*B2	IC100	B2
CL113	*B1	IC101	*C2
CL114	*B1	IC102	*C2
CL115	*A2	IC103	*B2
CL116	*A1	IC104	*A3
CL117	*A2	IC106	*B3
CL118	*B2	IC107	*C3
CL119	*C1	IC108	C3
CL120	*A1		
CL121	*A1	Q100	*C3
CL122	*C1		
CL123	*B2	R100	*B1
CL124	*C1	R101	*A1
CL125	*C1	R102	C1
CL126	*A1	R104	C1
CL127	*C1	R105	C1
CL128	*C1	R106	C1
CL129	*C1	R107	C1
CL130	*C1	R108	C1
CL131	*A1	R111	A1
CL132	*A2	R112	*C3
CL133	*A2	R113	*C3
CL134	*A3		
CL135	*B1	RB100	C3
CL136	*A1	RB101	C2
CL137	*B2	RB102	*C2
CL138	*B2	RB103	*C2
CL139	*B1	RB104	*C2
CL140	*B3	RB105	*C2
CL141	*B2	RB106	*C2
CL142	*B2	RB107	*C1
CL143	*B2	RB108	*B3
CL144	*B2	RB109	*C3
CL145	*B2		
CL146	*B2	*:B SIDE	
CL147	*B2		
CL148	*B2		
CL149	*B2		
CL150	*B2		
CL151	*B2		
CL152	*B2		
CL153	*B2		
CL154	*B2		
CL155	*B2		
CL156	*B2		
CL157	*B2		
CL158	*B2		
CL159	*B2		

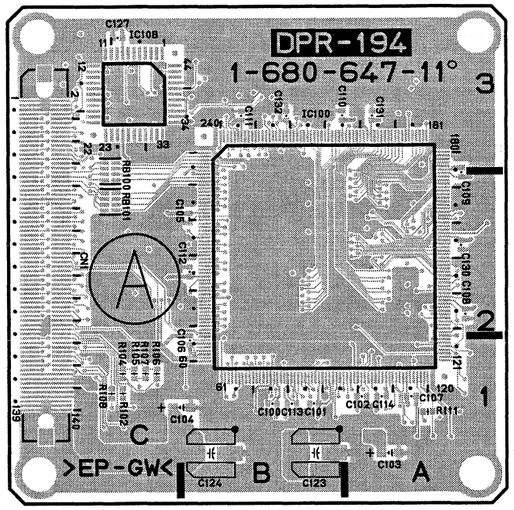

DPR-194 -A SIDE-
SUFFIX: -11

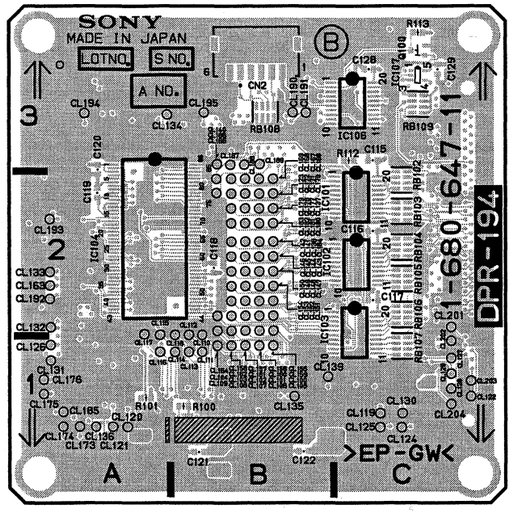

DPR-194 -B SIDE-
SUFFIX: -11

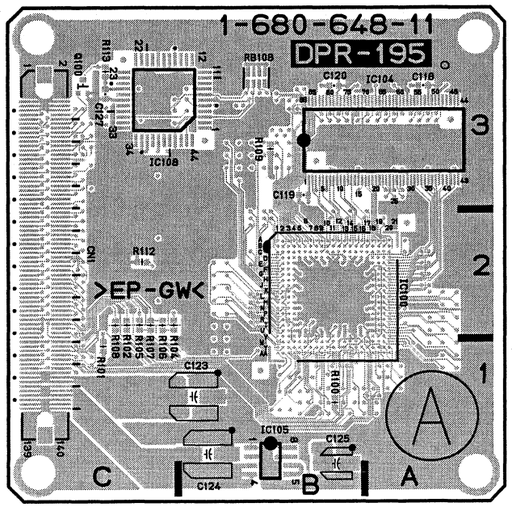

DPR-195 -A SIDE-
SUFFIX: -11

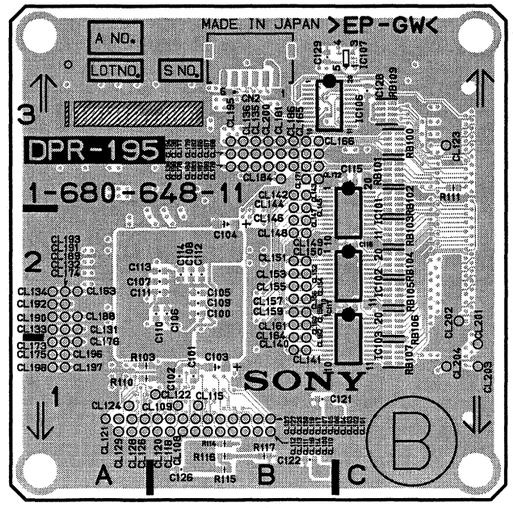

DPR-195 -B SIDE-
SUFFIX: -11

DPR-195 (1-680-648-11)

C100	*B2	CL161	*B2
C101	*B1	CL162	*B1
C102	*B1	CL163	*A2
C103	*B1	CL164	*B1
C104	*B2	CL165	*B3
C105	*B2	CL166	*B3
C106	*B2	CL167	*B3
C107	*B2	CL168	*B3
C108	*B2	CL169	*B3
C109	*B2	CL170	*B3
C110	*B2	CL171	*B3
C111	*B2	CL172	*B3
C112	*B2	CL173	*A1
C113	*B2	CL174	*A1
C114	*B2	CL175	*A1
C115	*C3	CL176	*A1
C116	*C2	CL177	*B3
C117	*C2	CL178	*B3
C118	A3	CL179	*B3
C119	B3	CL180	*B3
C120	B3	CL181	*B3
C121	*B1	CL182	*B3
C122	*B1	CL183	*B3
C123	B1	CL184	*B3
C124	B1	CL185	*B3
C125	B1	CL186	*B3
C126	*B1	CL187	*B3
C127	C3	CL188	*A2
C128	*C3	CL189	*A2
C129	*B3	CL190	*A2
		CL191	*A2
CL100	*B1	CL192	*A2
CL101	*B1	CL193	*A2
CL102	*B1	CL194	*B3
CL103	*B1	CL195	*B3
CL104	*B1	CL196	*A1
CL105	*B1	CL197	*A1
CL106	*B1	CL198	*A1
CL107	*B1	CL199	*B3
CL108	*B1	CL200	*B3
CL109	*B1	CL201	*C1
CL110	*B1	CL202	*C2
CL111	*B1	CL203	*C1
CL112	*B1	CL204	*C1
CL113	*B1		
CL114	*B1	CN1	C2
CL115	*B1	CN2	*B3
CL116	*B1		
CL117	*B1	IC100	B2
CL118	*B1	IC101	*B3
CL119	*B1	IC102	*B2
CL120	*B1	IC103	*B2
CL121	*A1	IC104	B3
CL122	*B1	IC105	B1
CL123	*C3	IC106	*B3
CL124	*A1	IC107	*C3
CL125	*A1	IC108	C3
CL126	*A1		
CL127	*A1	Q100	C3
CL128	*A1		
CL129	*A1	R100	B1
CL130	*B1	R101	C1
CL131	*A2	R102	C2
CL132	*A2	R103	*A1
CL133	*A2	R104	C2
CL134	*A2	R105	C2
CL135	*B3	R106	C2
CL136	*B3	R107	C2
CL137	*A1	R108	C2
CL138	*B3	R109	B3
CL139	*B3	R110	*A1
CL140	*B1	R111	*C3
CL141	*B1	R112	C2
CL142	*B3	R113	C3
CL143	*B3	R114	*B1
CL144	*B3	R115	*B1
CL145	*B3	R116	*B1
CL146	*B2	R117	*B1
CL147	*B2		
CL148	*B2	RB100	*C3
CL149	*B2	RB101	*C3
CL150	*B2	RB102	*C3
CL151	*B2	RB103	*C2
CL152	*B2	RB104	*C2
CL153	*B2	RB105	*C2
CL154	*B2	RB106	*C2
CL155	*B2	RB107	*C1
CL156	*B2	RB108	B3
CL157	*B2	RB109	*C3
CL158	*B2		
CL159	*B2	*:B SIDE	
CL160	*B2		

4-26

DPR-208 (1-683-119-11)

C100	*B2	CL160	*B2
C101	*B1	CL161	*B2
C102	*B1	CL162	*B1
C103	*B1	CL163	*A2
C104	*B2	CL164	*B1
C105	*B2	CL165	*B3
C106	*B2	CL166	*B3
C107	*B2	CL167	*B3
C108	*B2	CL168	*B3
C109	*B2	CL169	*B3
C110	*B2	CL170	*B3
C111	*B2	CL171	*B3
C112	*B2	CL172	*B3
C113	*B2	CL173	*A1
C114	*B2	CL174	*A1
C115	*C3	CL175	*A1
C116	*C2	CL176	*A1
C117	*C2	CL177	*B3
C118	A3	CL178	*B3
C119	B3	CL179	*B3
C120	B3	CL180	*B3
C121	*B1	CL181	*B3
C122	*B1	CL182	*B3
C123	B1	CL183	*B3
C124	B1	CL184	*B3
C125	B1	CL185	*B3
C126	*B1	CL186	*B3
C127	C3	CL187	*B3
C128	*C3	CL188	*A2
C129	*B3	CL189	*A2
C130	A3	CL190	*A2
		CL191	*A2
CL100	*B1	CL192	*A2
CL101	*B1	CL193	*A2
CL102	*B1	CL194	*B3
CL103	*B1	CL195	*B3
CL104	*B1	CL196	*A1
CL105	*B1	CL197	*A1
CL106	*B1	CL198	*A1
CL107	*B1	CL199	*B3
CL108	*B1	CL200	*B3
CL109	*B1	CL201	*C1
CL110	*B1	CL202	*C2
CL111	*B1	CL203	*C1
CL112	*B1	CL204	*C1
CL113	*B1		
CL114	*B1	CN1	C2
CL115	*B1	CN2	*B3
CL116	*B1		
CL117	*B1	IC100	B2
CL118	*B1	IC101	*B3
CL119	*B1	IC102	*B2
CL120	*B1	IC103	*B2
CL121	*A1	IC104	B3
CL122	*B1	IC105	B1
CL123	*C3	IC106	*B3
CL124	*A1	IC107	*C3
CL125	*A1	IC108	C3
CL126	*A1		
CL127	*A1	Q100	C3
CL128	*A1		
CL129	*A1	R100	B1
CL130	*B1	R101	C1
CL131	*A2	R102	C2
CL132	*A2	R103	*A1
CL133	*A2	R104	C2
CL134	*A2	R105	C2
CL135	*B3	R106	C2
CL136	*B3	R107	C2
CL137	*A1	R108	C2
CL138	*B3	R109	B3
CL139	*B3	R110	*A1
CL140	*B1	R111	*C3
CL141	*B1	R112	C2
CL142	*B3	R113	C3
CL143	*B3	R114	*B1
CL144	*B3	R115	*B1
CL145	*B3	R116	*B1
CL146	*B2	R117	*B1
CL147	*B2		
CL148	*B2	RB100	*C3
CL149	*B2	RB101	*C3
CL150	*B2	RB102	*C3
CL151	*B2	RB103	*C2
CL152	*B2	RB104	*C2
CL153	*B2	RB105	*C2
CL154	*B2	RB106	*C2
CL155	*B2	RB107	*C1
CL156	*B2	RB108	B3
CL157	*B2	RB109	*C3
CL158	*B2		
CL159	*B2	*:B SIDE	

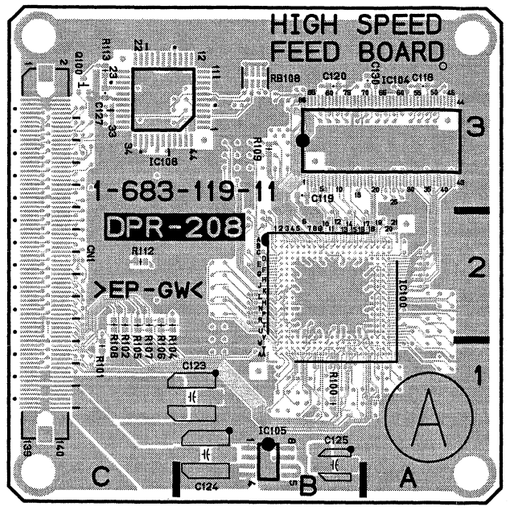

DPR-208 -A SIDE-
SUFFIX: -11

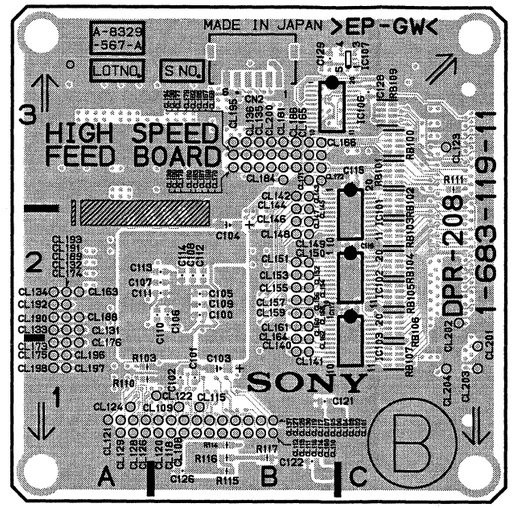

DPR-208 -B SIDE-
SUFFIX: -11

DPR-229 (1-687-742-14)

C100	*N5	C331	L3	C546	M1	C740	B2	CL105	M6	CL242	M3	CL340	M2	CL442	H4	CL839	E4	CL1618	F2	CN16	D1	IC508	*L1	R105	*C5	R338	*L4	R725	A4	R906	H1	RB503	K1
C101	*N5	C332	*L4	C547	M1	C741	*C2	CL106	N6	CL243	M3	CL341	M2	CL443	H4	CL841	E4	CL1619	F2			IC509	*M1	R106	N5	R348	P2	R726	A4	R907	G1	RB504	L2
C102	B5	C333	*L4	C548	*M1	C742	*C2	CL107	C5	CL244	M4	CL342	M2	CL444	H4	CL844	D5	CL1620	F3	E100	B4	IC510	*J1	R107	N5	R349	*K4	R727	A4	R908	G1	RB505	L2
C103	B5	C334	*K4	C549	J2	C743	*B1	CL108	C5	CL245	M4	CL343	M2	CL445	H4	CL847	D6	CL1621	F2	E200	M1	IC601	*D4	R108	C5	R350	*K4	R728	A4	R909	H1	RB506	L2
C104	*B5	C335	*K4	C550	J1	C744	*B1	CL109	C5	CL246	M4	CL344	M2	CL446	H4	CL848	D6	CL1622	F2	E300	P1	IC602	*F5	R109	C5	R351	*K4	R729	A4	R911	H2	RB507	L1
C105	*B5	C336	*L4	C551	J1	C745	*B2	CL110	C5	CL247	M4	CL345	M2	CL447	H4	CL849	D6	CL1623	E3	E400	G5	IC603	*E5	R110	B5	R352	*K4	R738	A3	R912	*G3	RB508	M1
C106	*C5	C337	*L4	C552	J1	C746	*B2	CL112	B5	CL248	M4	CL346	M2	CL448	H4	CL850	D6	CL1624	E3	E401	L3	IC650	E2	R111	B5	R353	*L4	R739	A3	R913	*G2	RB509	L1
C107	*C5	C338	*M4	C606	*D4	C747	*B1	CL113	B5	CL249	M4	CL347	M2	CL449	H4	CL851	K6	CL1625	E3	E500	L1	IC651	D2	R112	C6	R354	*L5	R740	A3	R914	*G2	RB510	M2
C108	C5	C339	*M4	C607	F5	C748	*B2	CL114	B5	CL250	M4	CL348	M2	CL450	H4	CL852	K6	CL1626	E3	E600	F3	IC652	E1	R113	C5	R355	*L5	R748	B4	R915	*H2	RB511	M1
C109	B4	C400	M2	C608	*E5	C800	G3	CL115	B5	CL251	M4	CL349	M2	CL451	H4	CL853	K6	CL1627	E3	E700	A3	IC653	F1	R114	B5	R356	*M4	R749	B4	R1004	A2	RB512	M1
C110	*C4	C401	*M3	C609	*F5	C801	*G4	CL116	B5	CL252	M4	CL350	M2	CL452	H4	CL854	K6	CL1628	E3	E800	D4	IC654	F1	R115	C5	R357	K3	R750	B4	R1005	A1	RB513	J1
C111	*B4	C402	*M2	C650	*F2	C802	*G4	CL117	B5	CL253	M4	CL351	M2	CL453	H5	CL855	K6	CL1629	E3			IC655	D1	R116	C5	R358	K3	R751	B4	R1006	A2	RB514	K2
C112	*C4	C403	*M2	C651	*F2	C803	*G4	CL118	B5	CL254	M4	CL352	M2	CL454	H5	CL856	K6	CL1630	E3	F800	A5	IC700	C3	R117	*C2	R359	*K4	R752	B4	R1014	B2	RB515	J1
C113	C4	C404	*K5	C652	*F2	C804	*G4	CL119	B5	CL255	M4	CL353	M2	CL455	H5	CL857	K6	CL1631	F3	F802	A5	IC701	A3	R118	*C2	R400	*K5	R753	B4	R1015	B3	RB516	H2
C114	C5	C405	*L2	C653	*F3	C810	*B5	CL120	C4	CL256	M4	CL356	M2	CL457	G6	CL858	K6	CL1632	F3	F803	A6	IC702	*A3	R122	*C2	R401	*M2	R754	B4	R1016	B3	RB517	H2
C115	*D4	C406	*L2	C654	F2	C811	*B5	CL121	C4	CL257	M4	CL360	N3	CL459	J5	CL860	D5	CL1633	F3			IC703	*A3	R124	*C2	R402	*K6	R755	B4	R1017	B2	RB518	H2
C116	*B5	C407	*M3	C655	*D3	C812	B5	CL122	C4	CL258	M4	CL361	N3	CL460	H4	CL872	D5	CL1634	E3	FB200	N5	IC704	B3	R125	*C2	R403	*K6	R756	B4	R1018	B3	RB600	F1
C117	*C2	C408	*L3	C656	*F1	C813	B5	CL127	C2	CL259	M4	CL362	N3	CL500	J3	CL873	D5	CL1635	F3			IC705	*B3	R126	*C2	R404	L3	R757	B4	R1019	B3	RB601	F1
C118	*P5	C409	*M2	C657	*D3	C814	D4	CL131	D2	CL260	M4	CL363	M2	CL501	J3	CL880	G4	CL1636	E3	FL200	M5	IC706	*B3	R130	*C2	R405	*J6	R758	B4	R1020	B3	RB602	F1
C119	C4	C410	M3	C658	*E1	C815	*A5	CL132	D2	CL261	M4	CL364	M1	CL502	J3	CL883	G4	CL1637	F2	FL600	*F6	IC707	A2	R131	*C2	R406	*J6	R759	B4	R1021	B2	RB700	D3
C120	*P5	C411	*L2	C659	*D2	C816	*A5	CL133	D2	CL262	M4	CL365	L3	CL503	J3	CL893	G4	CL1638	E3	FL601	*F6	IC708	*A1	R132	*C2	R407	*J6	R760	B4	R1022	B2	RB701	C3
C121	*D5	C412	H5	C660	*E1	C817	*A5	CL134	D2	CL263	M4	CL366	L3	CL504	J3	CL894	E4	CL1639	E3			IC709	*A2	R133	*C2	R408	*H6	R761	B4	R1023	B3	RB702	C3
C122	B4	C413	*J5	C661	*D2	C818	*A6	CL135	D2	CL264	M4	CL367	L3	CL505	J3	CL896	E6	CL1640	F2	IC100	*N5	IC710	B2	R134	*C2	R409	*H6	R762	B4	R1024	B2	RB703	C3
C123	C5	C415	*H5	C662	*E1	C819	A5	CL136	D2	CL265	N4	CL368	L3	CL506	J3	CL981	G1	CL1641	F2	IC101	*N5	IC711	*B1	R135	*C2	R410	*H6	R771	C3	R1025	B3	RB704	D3
C124	B5	C417	*J6	C663	D2	C820	A5	CL137	C2	CL266	M3	CL369	L3	CL507	J3	CL982	H2	CL1642	F2	IC102	*P5	IC712	*B2	R136	C5	R411	*H6	R772	C3	R1026	B2	RB705	C3
C125	*C4	C418	J4	C664	D1	C821	A5	CL139	C2	CL267	M3	CL370	K3	CL508	J3	CL983	H2	CL1643	F3	IC103	*P5	IC801	D5	R138	N5	R412	*H6	R773	C3	R1027	B3	RB706	C3
C126	*C5	C419	*H4	C665	F3	C822	A6	CL140	C2	CL268	M3	CL371	K5	CL509	J3	CL984	H2	CL1644	F3	IC104	*C5	IC802	D5	R139	N5	R413	*H6	R781	A2	R1028	B2	RB707	D3
C127	C4	C420	*H5	C666	*F2	C823	E5	CL141	C2	CL269	M3	CL373	K4	CL510	J3	CL985	H2	CL1645	F3	IC105	C5	IC803	*E5	R140	C4	R414	*H6	R782	A3	R1037	A4	RB708	D3
C200	N5	C421	H5	C667	*E2	C827	E5	CL142	C2	CL270	M3	CL374	K4	CL511	J2	CL986	H2	CL1646	F3	IC106	C5	IC804	E5	R141	C4	R415	*H6	R783	A3	R1038	B4	RB709	*A4
C201	*N5	C422	H5	C668	*E2	C829	*D5	CL143	C2	CL271	M3	CL375	K4	CL512	L2	CL987	H2	CL1647	F3	IC107	*B5	IC805	E5	R142	D2	R416	*H6	R784	A2	R1039	A4	RB710	*A4
C202	*M5	C423	*J4	C669	*E2	C831	E4	CL144	C2	CL272	M3	CL376	K4	CL513	L2	CL988	H2	CL1648	F3	IC108	*C5	IC808	D5	R143	C5	R417	*H6	R785	A3	R1040	C3	RB711	*A3
C203	*M5	C424	J5	C670	*E2	C832	K6	CL145	C4	CL273	M3	CL377	K4	CL514	J3	CL989	H2	CL1649	F3	IC109	*B5	IC809	D5	R144	C5	R418	*H6	R786	A3	R1041	A4	RB712	*A2
C204	N5	C425	H4	C671	*E3	C833	E4	CL146	C4	CL274	M3	CL378	K4	CL515	J2	CL990	H1	CL1650	F3	IC110	*C5	IC810	E5	R200	M6	R419	*H6	R787	A3	R1042	C2	RB801	D5
C205	N5	C426	*H4	C672	*E3	C834	E4	CL147	C4	CL275	N4	CL379	K4	CL516	J2	CL991	H1	CL1651	E3	IC111	B5	IC812	K5	R201	*M5	R420	*H6	R788	A2	R1043	C1	RB804	*D5
C206	M5	C427	*H4	C673	*F2	C835	F4	CL148	C4	CL276	N4	CL380	K4	CL517	J2	CL992	H2	CL1652	E3	IC112	C5	IC813	E5	R202	*M5	R421	*J5	R789	A2	R1044	C2	RB805	*D5
C207	M5	C428	H5	C674	*E3	C837	K5	CL149	C4	CL277	N4	CL381	K4	CL518	J2	CL993	H2	CL1653	E3	IC113	B4	IC814	E5	R203	N5	R422	*J5	R790	A3	R1049	B4	RB806	*D5
C208	*M4	C429	*H4	C675	*E3	C838	C5	CL150	C4	CL278	N4	CL382	K4	CL519	J2	CL994	G2	CL1654	E3	IC114	*B4	IC815	F5	R204	M5	R423	*J5	R791	A2	R1050	A4	RB807	*E5
C209	*M3	C430	J5	C676	*F2	C839	C6	CL151	C4	CL279	M3	CL384	K5	CL520	J2	CL995	H3	CL1655	E3	IC115	*B4	IC817	K5	R205	M5	R424	*J5	R792	A3	R1051	C3	RB808	F6
C210	*N3	C431	J4	C677	*F2	C842	*D5	CL152	C4	CL280	M3	CL385	K4	CL521	J2	CL996	H2	CL1656	E3	IC116	*C5	IC818	D5	R206	M5	R428	J5	R793	A2	R1052	*A4	RB809	F6
C211	*N4	C432	*J4	C678	*F2	C843	J5	CL153	C4	CL281	M3	CL386	K5	CL522	J2	CL997	H2	CL1657	E3	IC117	C5	IC819	D5	R207	N5	R429	J5	R794	A3	R1053	*C3	RB810	*J5
C212	*N3	C433	H3	C679	*E2	C844	D5	CL154	C4	CL282	M3	CL390	K4	CL523	J2	CL998	H2	CL1658	E3	IC118	*C5	IC822	D5	R208	N5	R430	J5	R795	A2	R1054	*B3	RB811	D5
C213	*N4	C434	F5	C680	*E2	C845	D5	CL155	C4	CL283	M3	CL391	K4	CL524	J2	CL999	G2	CL1659	F3	IC119	*C5	IC823	D5	R209	*N4	R431	J5	R796	*A2	R1055	*A2	RB812	D5
C214	*N4	C435	*G5	C681	*E2	C846	F5	CL156	C4	CL284	M3	CL392	K4	CL525	J2	CL1000	H2	CL1660	F3	IC120	*C4	IC824	F5	R210	N4	R432	J5	R797	*B2	R1056	*B2	RB813	*E5
C215	*M4	C437	*G5	C682	*E2	C847	*D5	CL157	C4	CL285	M4	CL393	J5	CL526	J1	CL1001	H2	CL1661	F3	IC121	*C5	IC825	D4	R211	*N4	R433	J5	R801	G4	R1057	A4	RB814	*D5
C216	*M4	C439	*H5	C683	*E2	C848	F5	CL158	C4	CL286	M3	CL394	K4	CL527	J2	CL1002	H2	CL1662	F3	IC122	C5	IC826	J5	R212	*N4	R434	J5	R802	F4	R1058	B4	RB815	*E5
C217	*N4	C440	J5	C684	*E3	C849	D4	CL159	C4	CL287	M4	CL395	K4	CL655	F5	CL1003	H2	CL1663	F2	IC123	*B5	IC827	G4	R213	*N4	R435	J5	R803	G4			RB816	*E5
C218	*N4	C500	J3	C685	*E1	C850	D5	CL160	C4	CL288	M4	CL396	K4	CL656	F5	CL1004	H3	CL1664	F2	IC124	C2	IC829	D5	R214	*N4	R436	J5	R804	G4	RB100	*N6	RB817	*E5
C219	*M4	C501	K3	C686	E1	C851	D4	CL161	C4	CL289	M4	CL397	K4	CL657	F5	CL1005	H3	CL1665	F3	IC125	C4	IC831	E4	R215	*N4	R437	*K5	R805	G4	RB101	P5	RB818	*D1
C220	*N3	C502	K3	C687	D3	C852	*E5	CL162	C5	CL290	N4	CL398	L4	CL658	F5	CL1006	H3	CL1666	F3	IC126	D2	IC832	*F4	R216	N3	R439	H5	R806	G4	RB102	*N6	RB819	*D4
C221	*M3	C503	K3	C688	E2	C853	E5	CL163	B5	CL291	N4	CL399	L4	CL659	F5	CL1007	H3	CL1667	F3	IC200	*N5	IC833	F4	R217	N5	R440	*K5	R811	D4	RB103	*N6		
C222	*N4	C504	K3	C689	F1	C862	F3	CL200	M6	CL292	N4	CL400	M3	CL660	F5	CL1008	H1	CL1668	F3	IC201	*M5	IC834	E4	R218	*N4	R441	J4	R812	D4	RB104	*B6	X200	N5
C223	M4	C505	L3	C690	F1	C863	E4	CL201	M5	CL293	N4	CL401	M3	CL661	F5	CL1009	H2	CL1669	E2	IC202	*M5	IC835	*P3	R219	M4	R442	*F5	R813	E5	RB105	B6		
C224	M4	C506	J2	C700	*C3	C864	E4	CL202	M5	CL294	N4	CL402	M3	CL662	F5	CL1200	L4	CL1670	E3	IC203	M5	IC902	G2	R220	K5	R443	F5	R814	E6	RB106	C6	*:B SIDE	
C225	M4	C507	J3	C701	A3	C865	*F4	CL203	M5	CL295	N4	CL403	M3	CL663	F5	CL1201	L4	CL1671	E3	IC204	*M5	IC903	*G2	R221	K5	R502	*L2	R815	*E5	RB107	C5		
C226	*P4	C508	J3	C702	A3	C867	*A5	CL204	M5	CL296	N3	CL404	M3	CL664	F5	CL1202	L4	CL1672	F3	IC205	M5	IC904	*H2	R222	L5	R503	H1	R820	*E5	RB108	*B5		
C227	*N4	C509	K3	C703	A4	C868	*A5	CL205	M5	CL297	N3	CL405	M3	CL671	F5	CL1203	L3	CL1673	F2	IC206	N4	IC905	*G2	R300	*K5	R605	*D4	R822	E5	RB109	*B5		
C228	*N3	C510	K3	C704	A4	C869	D5	CL206	M5	CL298	N4	CL406	M3	CL672	F5	CL1204	K3	CL1674	E2	IC208	M4			R301	*K4	R606	*E4	R823	F5	RB110	*C5		
C229	*P3	C511	L3	C705	*A3	C870	*P3	CL207	N5	CL299	N4	CL407	M3	CL673	F5	CL1205	K3	CL1675	E2	IC209	M4	L100	*B5	R302	*K5	R607	F1	R824	F5	RB111	*C5		
C230	M5	C512	L2	C706	*A3	C912	G3	CL208	N5	CL305	K5	CL408	M3	CL674	F5	CL1206	K3	CL1676	E3	IC210	M4	L101	C5	R303	*K5	R619	*E4	R825	F4	RB112	*B5		
C231	*L5	C513	L2	C707	*A3	C913	F2	CL209	N5	CL306	K5	CL409	N3	CL679	F6	CL1207	K3	CL1677	F3	IC211	N3	L102	*B5	R304	K5	R620	*E4	R826	F4	RB113	B5		
C232	*L5	C514	K3	C708	*A3	C914	G1	CL210	N5	CL307	K5	CL410	N3	CL680	F6	CL1208	K3	CL1678	F3	IC212	*K5	L103	*D5	R305	*K5	R650	*E3	R827	F5	RB114	*C4		
C233	*L5	C515	*K2	C709	*A3	C915	G3	CL211	N5	CL309	K5	CL411	M2	CL681	D4	CL1209	K4	CL1679	F2	IC213	*L5	L200	N5	R306	*K5	R651	*F2	R828	F5	RB115	*C4		
C234	M5	C516	*K2	C710	*A3	C916	*G3	CL212	M4	CL310	P2	CL412	L3	CL682	E4	CL1210	K4	CL1680	F3	IC214	*L5	L201	*M5	R307	*K5	R652	F2	R829	F4	RB116	*C2		
C235	*M5	C517	*K2	C711	*A3	C917	*H2	CL213	M4	CL311	P2	CL413	M2	CL703	A4	CL1211	K3	CL1681	E2	IC217	*M5	L202	*M5	R308	*K5	R653	F2	R830	*E5	RB117	*C2		
C300	*K4	C518	*J2	C712	*A3	C918	*G3	CL214	M4	CL312	P2	CL414	M2	CL704	A3	CL1212	K5	CL1682	D2	IC300	K4	L402	H5	R309	K5	R654	F2	R831	K5	RB118	*D2		
C301	*K4	C519	J2	C713	C3	C919	G2	CL215	N4	CL313	P2	CL415	L2	CL705	A4	CL1216	K4	CL1683	D2	IC301	N2	L405	G5	R310	*K5	R656	*F3	R834	K6	RB119	*C2		
C302	*K5	C520	*J2	C714	C3	C920	G3	CL216	M4	CL314	P2	CL416	L2	CL706	A4	CL1217	K3	CL1684	E2	IC302	*K3	L600	E5	R311	*K5	R657	*F2	R835	K6	RB120	*C2		
C303	*L4	C521	*K2	C715	B4	C921	*H2	CL217	N4	CL315	P2	CL417	L2	CL707	A4	CL1218	L3	CL1685	E2	IC303	J4	L651	*D1	R312	N1	R658	*F2	R839	*E5	RB121	*C4		
C304	K5	C522	J3	C716	B4	C922	*G3	CL218	N4	CL316	P3	CL418	L3	CL709	A4	CL1219	K4	CL1686	F2	IC307	*N1	L800	A5	R313	N1	R659	*F2	R841	E5	RB122	*C4		
C305	P2	C523	J2	C717	*C3	C923	*H3	CL219	N4	CL317	P3	CL419	L3	CL710	A4	CL1220	K4	CL1687	F2	IC308	*N2	L801	A5	R314	P1	R660	*F2	R851	E4	RB123	B4		
C306	*P3	C524	J2	C718	*C3	C924	*H3	CL220	N4	CL318	P3	CL420	L3	CL711	A4	CL1221	K5	CL1688	F2	IC309	*N2	L802	A5	R315	P1	R661	*E3	R852	G4	RB200	*N6		
C307	P2	C525	J2	C719	*B3	C925	*G2	CL221	N4	CL319	P3	CL421	L3	CL720	A3	CL1222	K3	CL1689	F2	IC310	*H4	L803	A6	R316	P1	R662	*F2	R854	K5	RB201	*M6		
C308	*P1	C526	K3	C720	*B3	C926	*H2	CL222	N4	CL320	P3	CL422	L3	CL721	C3	CL1223	K3	CL1690	E2	IC311	*H4	L804	*E5	R317	N1	R663	*F2	R855	*E4	RB202	*M6		
C309	*N1	C527	*L2	C721	*B3	C927	*G3	CL223	N4	CL321	M2	CL423	L3	CL723	B4	CL1224	K3	CL2200	N4	IC312	*L4	L806	*C6	R318	N1	R666	*F2	R856	*E4	RB203	*M6		
C310	*N2	C528	*L2	C722	*B3	C928	*G2	CL224	N4	CL322	M3	CL424	L2	CL724	C3	CL1600	F2	CL2201	M3	IC400	M2	L807	F5	R319	P1	R668	*F2	R857	E4	RB204	*M6		
C311	*N2	C529	*K2	C723	*B3	C929	*G2	CL225	N3	CL323	N3	CL425	L2	CL725	A2	CL1601	F2	CL2202	M3	IC401	*K5	L808	*D4	R320	P1	R670	*D2	R858	E4	RB205	*M3		
C312	*N3	C530	*J2	C724	*B3	C930	G2	CL226	N4	CL324	P3	CL426	L2	CL726	A2	CL1602	F2	CL2203	K5	IC402	*J5			R321	P1	R671	*F1	R859	E4	RB206	*M3		
C313	*N3	C531	*J2	C725	A2	C931	*G2	CL227	N4	CL325	M1	CL427	L2	CL730	A2	CL1603	F2	CL2204	K5	IC404	*H5	Q200	L5	R322	P3	R672	D1	R860	E4	RB213	*K5		
C314	N1	C532	*J2	C726	A2	C932	G3	CL228	N4	CL326	P3	CL428	L2	CL731	A2	CL1604	F2	CL2205	M6	IC406	*J5	Q400	F5	R323	P3	R673	*E1	R861	E4	RB214	*K5		
C315	*K3	C533	K2	C727	A2	C933	*G3	CL229	N4	CL327	M1	CL429	L2	CL732	C2	CL1605	F2	CL2206	M6	IC407	H4	Q800	*C6	R324	N3	R674	*E1	R862	*E4	RB215	*L5		
C316	J3	C534	K1	C728	A2	C934	*G2	CL230	N4	CL328	M1	CL430	L2	CL733	B2	CL1606	F2	CL2207	M6	IC408	*F5	Q801	A5	R325	N3	R675	*E1	R863	*C6	RB216	*L5		
C320	*N1	C535	K1	C729	*A2	C935	*G2	CL231	N4	CL329	M2	CL431	L2	CL737	B2	CL1607	F2	CL2208	M6	IC410	*G5	Q802	*A5	R326	N3	R676	E1	R864	*A5	RB217	*L5		
C321	*N2	C536	K1	C730	*A2	C936	*H2	CL232	N4	CL330	M2	CL432	H5	CL738	C2	CL1608	F2	CL2209	M6	IC412	*G5			R327	N3	R715	A4	R865	*A5	RB218	*L5		
C322	*N1	C537	L1	C731	*A1	C937	*G3	CL233	N4	CL331	M2	CL433	H4	CL739	B4	CL1609	F2	CL2210	L6	IC413	J5	R1	*K5	R328	N3	R716	A4	R866	*B5	RB300	J4		
C323	*N3	C538	K1	C732	*A1	C938	*H2	CL234	N4	CL332	M2	CL434	J4	CL740	A2	CL1610	F2	CL2211	M6	IC500	K2	R2	*D4	R329	N3	R717	A4	R867	*A4	RB400	*G5		
C324	*P2	C539	L1	C733	*A2	C939	*H3	CL235	N4	CL333	M2	CL435	J4	CL741	B2	CL1611	F2	CL2212	L6	IC501	J2	R3	G4	R330	N3	R718	A4	R868	K5	RB401	*G5		
C325	*N2	C540	L1	C734	*A2			CL236	N4	CL334	M1	CL436	H4	CL800	G4	CL1612	F2	CL2213	M6	IC502	J2	R4	G4	R331	P3	R719	A4	R869	*G4	RB402	*G5		
C326	*P2	C541	L2	C735	*A1	CL100	N6	CL237	M3	CL335	M1	CL437	H4	CL802	F4	CL1613	F2	CL2214	M6	IC503	*L2	R5	G4	R332	P3	R720	A4	R870	*G4	RB403	*G5		
C327	*N2	C542	L1	C736	*A2	CL101	N6	CL238	N3	CL336	M1	CL438	H4	CL819	F4	CL1614	F2			IC504	*K2	R100	N5	R333	P3	R721	A4	R871	F5	RB404	*G5		
C328	P2	C543	M1	C737	C2	CL102	N6	CL239	N4	CL337	M2	CL439	H4	CL835	E5	CL1615	F2	CN13	L6	IC505	*J2	R101	N5	R334	N1	R722	A4	R903	G3	RB500	*J2		
C329	*H4	C544	M1	C738	C2	CL103	M6	CL240	N3	CL338	M2	CL440	H4	CL836	E5	CL1616	F2	CN14	G6	IC506	*K1	R102	P5	R335	N1	R723	A4	R904	G3	RB501	K1		
C330	*H4	C545	M1	C739	B2	CL104	M6	CL241	N3	CL339	M1	CL441	H4	CL837	E5	CL1617	F3	CN15	C6	IC507	*L1	R103	*C5	R336	*K5	R724	A4	R905	G1	RB502	K2		

DPR-229
SUFFIX: -14

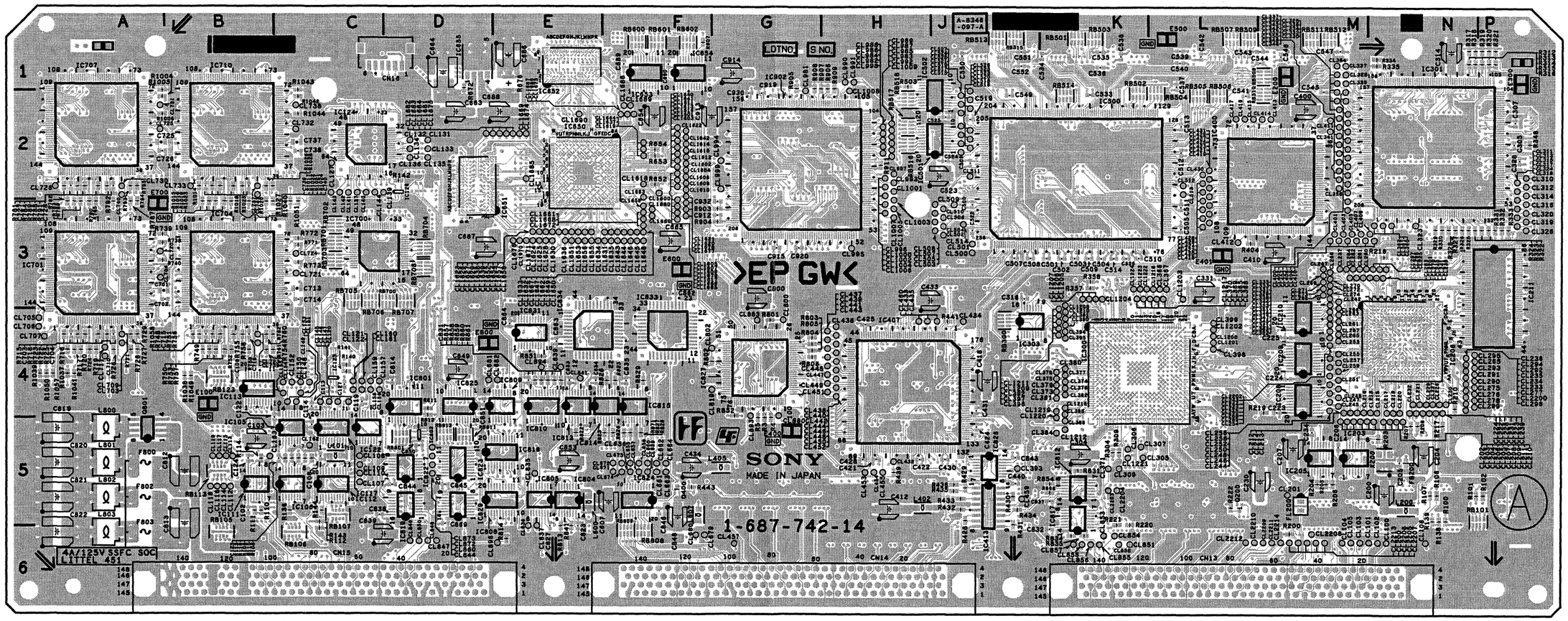

Components locations list; previous page

DPR-229 -A SIDE-
SUFFIX: -14

4-30 (d)

DPR-229
SUFFIX: -14

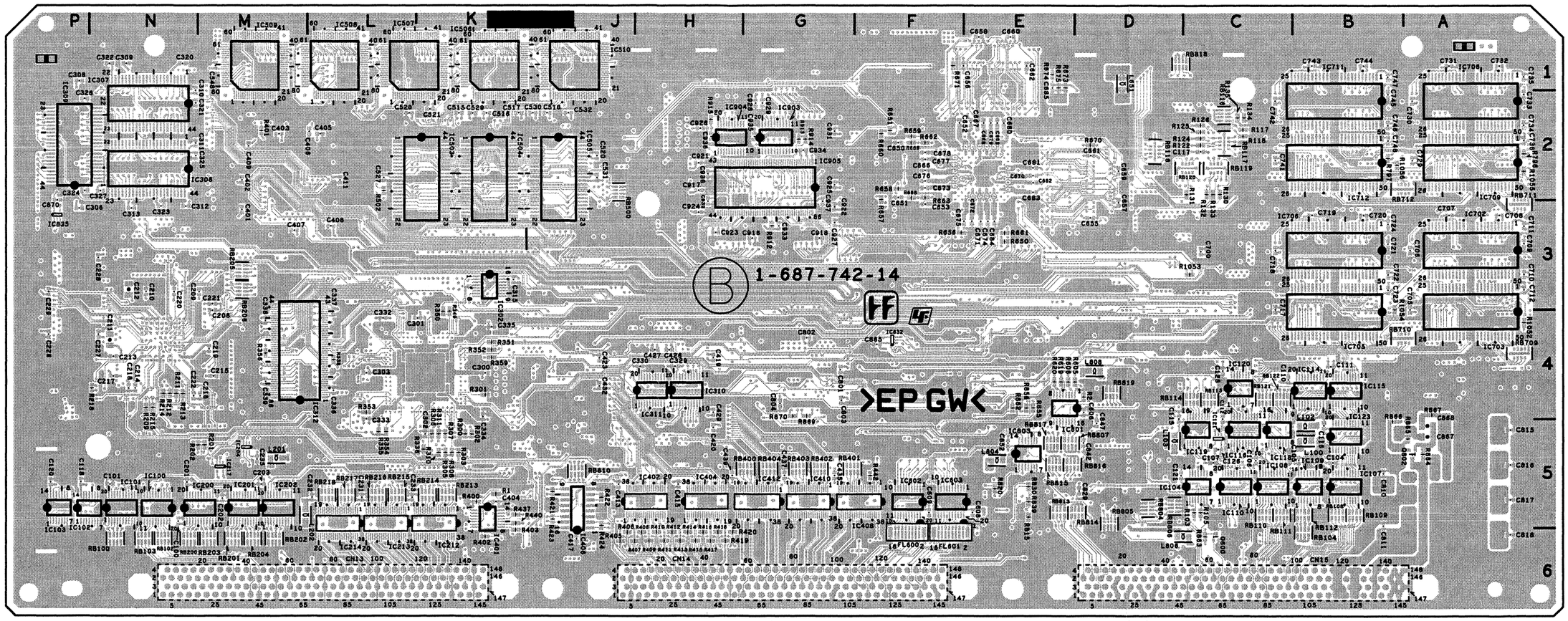

DPR-229 -B SIDE-
SUFFIX: -14

4-31 (d)

DPR-229 (1-687-742-13)

C100	*N5	C331	L3	C546	M1	C740	B2	CL106	N6	CL243	M3	CL341	M2	CL443	H4	CL841	E4	CL1619	F2	E100	B4	IC510	*J1	R108	C5	R350	*K4	R728	A4	R913	*G2	RB509	L1
C101	*N5	C332	*L4	C547	M1	C741	*C2	CL107	C5	CL244	M4	CL342	M2	CL444	H4	CL844	D5	CL1620	F3	E200	M1	IC601	*D4	R109	C5	R351	*K4	R729	A4	R914	*G2	RB510	M2
C102	B5	C333	*L4	C548	*M1	C742	*C2	CL108	C5	CL245	M4	CL343	M2	CL445	H4	CL847	D6	CL1621	F2	E300	P1	IC602	*F5	R110	B5	R352	*K4	R738	A3	R915	*H2	RB511	M1
C103	B5	C334	*K4	C549	J2	C743	*B1	CL109	C5	CL246	M4	CL344	M2	CL446	H4	CL848	D6	CL1622	F2	E400	G5	IC603	*E5	R111	B5	R353	*L4	R739	A3	R1004	A2	RB512	M1
C104	*B5	C335	*K4	C550	J1	C744	*B1	CL110	C5	CL247	M4	CL345	M2	CL447	H4	CL849	D6	CL1623	E3	E401	L3	IC650	E2	R112	C6	R354	*L5	R740	A3	R1005	A1	RB513	J1
C105	*B5	C336	*L4	C551	J1	C745	*B2	CL112	B5	CL248	M4	CL346	M2	CL448	H4	CL850	D6	CL1624	E3	E500	L1	IC651	D2	R113	C5	R355	*L5	R748	B4	R1006	A2	RB514	K2
C106	*C5	C337	*L4	C552	J1	C746	*B2	CL113	B5	CL249	M4	CL347	M2	CL449	H4	CL851	K6	CL1625	E3	E600	F3	IC652	E1	R114	B5	R356	*M4	R749	B4	R1014	B2	RB515	J1
C107	*C5	C338	*M4	C606	*D4	C747	*B1	CL114	B5	CL250	M4	CL348	M2	CL450	H4	CL852	K6	CL1626	E3	E700	A3	IC653	F1	R115	C5	R357	K3	R750	B4	R1015	B3	RB516	H2
C108	C5	C339	*M4	C607	F5	C748	*B2	CL115	B5	CL251	M4	CL349	M2	CL451	H4	CL853	K6	CL1627	E3	E800	D4	IC654	F1	R116	C5	R358	K3	R751	B4	R1016	B3	RB517	H2
C109	B4	C400	M2	C608	*E5	C800	G3	CL116	B5	CL252	M4	CL350	M2	CL452	H4	CL854	K6	CL1628	E3			IC655	D1	R117	*C2	R359	*K4	R752	B4	R1017	B2	RB518	H2
C110	*C4	C401	*M3	C609	*F5	C801	*G4	CL117	B5	CL253	M4	CL351	M2	CL453	H5	CL855	K6	CL1629	E3	F800	A5	IC700	C3	R118	*C2	R400	*K5	R753	B4	R1018	B3	RB600	F1
C111	*B4	C402	*M2	C650	*F2	C802	*G4	CL118	B5	CL254	M4	CL352	M2	CL454	H5	CL856	K6	CL1630	E3	F802	A5	IC701	A3	R122	*C2	R401	*M2	R754	B4	R1019	B3	RB601	F1
C112	*C4	C403	*M2	C651	*F2	C803	*G4	CL119	B5	CL255	M4	CL353	M2	CL455	H5	CL857	K6	CL1631	F3	F803	A6	IC702	*A3	R124	*C2	R402	*K6	R755	B4	R1020	B3	RB602	F1
C113	C4	C404	*K5	C652	*F2	C804	*G4	CL120	C4	CL256	M4	CL356	M2	CL457	G6	CL858	K6	CL1632	F3			IC703	*A3	R125	*C2	R403	*K6	R756	B4	R1021	B2	RB700	D3
C114	C5	C405	*L2	C653	*F3	C810	*B5	CL121	C4	CL257	M4	CL360	N3	CL459	J5	CL860	D5	CL1633	F3	FB200	N5	IC704	B3	R126	*C2	R404	L3	R757	B4	R1022	B2	RB701	C3
C115	*D4	C406	*L2	C654	F2	C811	*B5	CL122	C4	CL258	M4	CL361	N3	CL460	H4	CL872	D5	CL1634	E3			IC705	*B3	R130	*C2	R405	*J6	R758	B4	R1023	B3	RB702	C3
C116	*B5	C407	*M3	C655	*D3	C812	B5	CL127	C2	CL259	M4	CL362	N3	CL500	J3	CL873	D5	CL1635	F3	FL200	M5	IC706	*B3	R131	*C2	R406	*J6	R759	B4	R1024	B2	RB703	C3
C117	*C2	C408	*L3	C656	*F1	C813	B5	CL131	D2	CL260	M4	CL363	M2	CL501	J3	CL880	G4	CL1636	E3	FL600	*F6	IC707	A2	R132	*C2	R407	*J6	R760	B4	R1025	B3	RB704	D3
C118	*P5	C409	*M2	C657	*D3	C814	D4	CL132	D2	CL261	M4	CL364	M1	CL502	J3	CL883	G4	CL1637	F2	FL601	*F6	IC708	*A1	R133	*C2	R408	*H6	R761	B4	R1026	B2	RB705	C3
C119	C4	C410	M3	C658	*E1	C815	*A5	CL133	D2	CL262	M4	CL365	L3	CL503	J3	CL893	G4	CL1638	E3			IC709	*A2	R134	*C2	R409	*H6	R762	B4	R1027	B3	RB706	C3
C120	*P5	C411	*L2	C659	*D2	C816	*A5	CL134	D2	CL263	M4	CL366	L3	CL504	J3	CL894	E4	CL1639	E3	IC100	*N5	IC710	B2	R135	*C2	R410	*H6	R771	C3	R1028	B2	RB707	D3
C121	*D5	C412	H5	C660	*E1	C817	*A5	CL135	D2	CL264	M4	CL367	L3	CL505	J3	CL896	E6	CL1640	F2	IC101	*N5	IC711	*B1	R136	C5	R411	*H6	R772	C3	R1037	A4	RB708	D3
C122	B4	C413	*J5	C661	*D2	C818	*A6	CL136	D2	CL265	N4	CL368	L3	CL506	J3	CL981	G1	CL1641	F2	IC102	*P5	IC712	*B2	R138	N5	R412	*H6	R773	C3	R1038	B4	RB709	*A4
C123	C5	C415	*H5	C662	*E1	C819	A5	CL137	C2	CL266	M3	CL369	L3	CL507	J3	CL982	H2	CL1642	F2	IC103	*P5	IC801	D5	R139	N5	R413	*H6	R781	A2	R1039	A4	RB710	*A4
C124	B5	C417	*J6	C663	D2	C820	A5	CL139	C2	CL267	M3	CL370	K3	CL508	J3	CL983	H2	CL1643	F3	IC104	*C5	IC802	D5	R140	C4	R414	*H6	R782	A3	R1040	C3	RB711	*A3
C125	*C4	C418	J4	C664	D1	C821	A5	CL140	C2	CL268	M3	CL371	K5	CL509	J3	CL984	H2	CL1644	F3	IC105	C5	IC803	*E5	R141	C4	R415	*H6	R783	A3	R1041	A4	RB712	*A2
C126	*C5	C419	*H4	C665	F3	C822	A6	CL141	C2	CL269	M3	CL373	K4	CL510	J3	CL985	H2	CL1645	F3	IC106	C5	IC804	E5	R142	D2	R416	*H6	R784	A2	R1042	C2	RB801	D5
C127	C4	C420	*H5	C666	*F2	C823	E5	CL142	C2	CL270	M3	CL374	K4	CL511	J2	CL986	H2	CL1646	F3	IC107	*B5	IC805	E5	R143	C5	R417	*H6	R785	A3	R1043	C1	RB804	*D5
C200	N5	C421	H5	C667	*E2	C827	E5	CL143	C2	CL271	M3	CL375	K4	CL512	L2	CL987	H2	CL1647	F3	IC108	*C5	IC808	D5	R144	C5	R418	*H6	R786	A3	R1044	C2	RB805	*D5
C201	*N5	C422	H5	C668	*E2	C829	*D5	CL144	C2	CL272	M3	CL376	K4	CL513	L2	CL988	H2	CL1648	F3	IC109	*B5	IC809	D5	R200	M6	R419	*H6	R787	A3	R1049	B4	RB806	*D5
C202	*M5	C423	*J4	C669	*E2	C831	E4	CL145	C4	CL273	M3	CL377	K4	CL514	J3	CL989	H2	CL1649	F3	IC110	*C5	IC810	E5	R201	*M5	R420	*H6	R788	A2	R1050	A4	RB807	*E5
C203	*M5	C424	J5	C670	*E2	C832	K6	CL146	C4	CL274	M3	CL378	K4	CL515	J2	CL990	H1	CL1650	F3	IC111	B5	IC812	K5	R202	*M5	R421	*J5	R789	A2	R1051	C3	RB808	F6
C204	N5	C425	H4	C671	*E3	C833	E4	CL147	C4	CL275	N4	CL379	K4	CL516	J2	CL991	H1	CL1651	E3	IC112	C5	IC813	E5	R203	N5	R422	*J5	R790	A3	R1052	*A4	RB809	F6
C205	N5	C426	*H4	C672	*E3	C834	E4	CL148	C4	CL276	N4	CL380	K4	CL517	J2	CL992	H2	CL1652	E3	IC113	B4	IC814	E5	R204	M5	R423	*J5	R791	A2	R1053	*C3	RB810	*J5
C206	M5	C427	*H4	C673	*F2	C835	F4	CL149	C4	CL277	N4	CL381	K4	CL518	J2	CL993	H2	CL1653	E3	IC114	*B4	IC815	F5	R205	M5	R424	*J5	R792	A3	R1054	*B3	RB811	D5
C207	M5	C428	H5	C674	*E3	C837	K5	CL150	C4	CL278	N4	CL382	K4	CL519	J2	CL994	G2	CL1654	E3	IC115	*B4	IC817	K5	R206	M5	R428	J5	R793	A2	R1055	*A2	RB812	D5
C208	*M4	C429	*H4	C675	*E3	C838	C5	CL151	C4	CL279	M3	CL384	K5	CL520	J2	CL995	H3	CL1655	E3	IC116	*C5	IC818	D5	R207	N5	R429	J5	R794	A3	R1056	*B2	RB813	*E5
C209	*M3	C430	J5	C676	*F2	C839	C6	CL152	C4	CL280	M3	CL385	K4	CL521	J2	CL996	H2	CL1656	E3	IC117	C5	IC819	D5	R208	N5	R430	J5	R795	A2	R1057	A4	RB814	*D5
C210	*N3	C431	J4	C677	*F2	C842	*D5	CL153	C4	CL281	M3	CL386	K5	CL522	J2	CL997	H2	CL1657	E3	IC118	*C5	IC822	D5	R209	*N4	R431	J5	R796	*A2	R1058	B4	RB815	*E5
C211	*N4	C432	*J4	C678	*F2	C843	J5	CL154	C4	CL282	M3	CL390	K4	CL523	J2	CL998	H2	CL1658	E3	IC119	*C5	IC823	D5	R210	N4	R432	J5	R797	*B2			RB816	*E5
C212	*N3	C433	H3	C679	*E2	C844	D5	CL155	C4	CL283	M3	CL391	K4	CL524	J2	CL999	G2	CL1659	F3	IC120	*C4	IC824	F5	R211	*N4	R433	J5	R801	G4	RB100	*N6	RB817	*E5
C213	*N4	C434	F5	C680	*E2	C845	D5	CL156	C4	CL284	M3	CL392	K4	CL525	J2	CL1000	H2	CL1660	F3	IC121	*C5	IC825	D4	R212	*N4	R434	J5	R802	F4	RB101	P5	RB818	*D1
C214	*N4	C435	*G5	C681	*E2	C846	F5	CL157	C4	CL285	M4	CL393	J5	CL526	J1	CL1001	H2	CL1661	F3	IC122	C5	IC826	J5	R213	*N4	R435	J5	R803	G4	RB102	*N6	RB819	*D4
C215	*M4	C437	*G5	C682	*E2	C847	*D5	CL158	C4	CL286	M3	CL394	K4	CL527	J2	CL1002	H2	CL1662	F3	IC123	*B5	IC827	G4	R214	*N4	R436	J5	R804	G4	RB103	*N6		
C216	*M4	C439	*H5	C683	*E2	C848	F5	CL159	C4	CL287	M4	CL395	K4	CL655	F5	CL1003	H2	CL1663	F2	IC124	C2	IC829	D5	R215	*N4	R437	*K5	R805	G4	RB104	*B6	X200	N5
C217	*N4	C440	J5	C684	*E3	C849	D4	CL160	C4	CL288	M4	CL396	K4	CL656	F5	CL1004	H3	CL1664	F2	IC125	C4	IC831	E4	R216	N3	R439	H5	R806	G4	RB105	B6		
C218	*N4	C500	J3	C685	*E1	C850	D5	CL161	C4	CL289	M4	CL397	K4	CL657	F5	CL1005	H3	CL1665	F3	IC126	D2	IC832	*F4	R217	N5	R440	*K5	R811	D4	RB106	C6	*:B SIDE	
C219	*M4	C501	K3	C686	E1	C851	D4	CL162	C5	CL290	N4	CL398	L4	CL658	F5	CL1006	H3	CL1666	F3	IC200	*N5	IC833	F4	R218	*N4	R441	J4	R812	D4	RB107	C5		
C220	*N3	C502	K3	C687	D3	C852	*E5	CL163	B5	CL291	N4	CL399	L4	CL659	F5	CL1007	H3	CL1667	F3	IC201	*M5	IC834	E4	R219	M4	R442	*F5	R813	E5	RB108	*B5		
C221	*M3	C503	K3	C688	E2	C853	E5	CL200	M6	CL292	N4	CL400	M3	CL660	F5	CL1008	H1	CL1668	F3	IC202	*M5	IC902	G2	R220	K5	R443	F5	R814	E6	RB109	*B5		
C222	*N4	C504	K3	C689	F1	C862	F3	CL201	M5	CL293	N4	CL401	M3	CL661	F5	CL1009	H2	CL1669	E2	IC203	M5	IC903	*G2	R221	K5	R502	*L2	R815	*E5	RB110	*C5		
C223	M4	C505	L3	C690	F1	C863	E4	CL202	M5	CL294	N4	CL402	M3	CL662	F5	CL1200	L4	CL1670	E3	IC204	*M5	IC904	*H2	R222	L5	R503	H1	R820	*E5	RB111	*C5		
C224	M4	C506	J2	C700	*C3	C864	E4	CL203	M5	CL295	N4	CL403	M3	CL663	F5	CL1201	L4	CL1671	E3	IC205	M5	IC905	*G2	R300	*K5	R605	*D4	R822	E5	RB112	*B5		
C225	M4	C507	J3	C701	A3	C865	*F4	CL204	M5	CL296	N3	CL404	M3	CL664	F5	CL1202	L4	CL1672	F3	IC206	N4			R301	*K4	R606	*E4	R823	F5	RB113	B5		
C226	*P4	C508	J3	C702	A3	C867	*A5	CL205	M5	CL297	N3	CL405	M3	CL671	F5	CL1203	L3	CL1673	F2	IC208	M4	L100	*B5	R302	*K5	R607	F1	R824	F5	RB114	*C4		
C227	*N4	C509	K3	C703	A4	C868	*A5	CL206	M5	CL298	N4	CL406	M3	CL672	F5	CL1204	K3	CL1674	E2	IC209	M4	L101	C5	R303	*K5	R619	*E4	R825	F4	RB115	*C4		
C228	*N3	C510	K3	C704	A4	C869	D5	CL207	N5	CL299	N4	CL407	M3	CL673	F5	CL1205	K3	CL1675	E2	IC210	M4	L102	*B5	R304	K5	R620	*E4	R826	F4	RB116	*C2		
C229	*P3	C511	L3	C705	*A3	C912	G3	CL208	N5	CL305	K5	CL408	M3	CL674	F5	CL1206	K3	CL1676	E3	IC211	N3	L103	*D5	R305	*K5	R650	*E3	R827	F5	RB117	*C2		
C230	M5	C512	L2	C706	*A3	C913	F2	CL209	N5	CL306	K5	CL409	N3	CL679	F6	CL1207	K3	CL1677	F3	IC212	*K5	L200	N5	R306	*K5	R651	*F2	R828	F5	RB118	*D2		
C231	*L5	C513	L2	C707	*A3	C914	G1	CL210	N5	CL307	K5	CL410	N3	CL680	F6	CL1208	K3	CL1678	F3	IC213	*L5	L201	*M5	R307	*K5	R652	F2	R829	F4	RB119	*C2		
C232	*L5	C514	K3	C708	*A3	C915	G3	CL211	N5	CL309	K5	CL411	M2	CL681	D4	CL1209	K4	CL1679	F2	IC214	*L5	L202	*M5	R308	*K5	R653	F2	R830	*E5	RB120	*C2		
C233	*L5	C515	*K2	C709	*A3	C916	*G3	CL212	M4	CL310	P2	CL412	L3	CL682	E4	CL1210	K4	CL1680	F3	IC217	*M5	L402	H5	R309	K5	R654	F2	R831	K5	RB121	*C4		
C234	M5	C516	*K2	C710	*A3	C917	*H2	CL213	M4	CL311	P2	CL413	M2	CL703	A4	CL1211	K3	CL1681	E2	IC300	K4	L405	G5	R310	*K5	R656	*F3	R834	K6	RB122	*C4		
C235	*M5	C517	*K2	C711	*A3	C918	*G3	CL214	M4	CL312	P2	CL414	M2	CL704	A3	CL1212	K5	CL1682	D2	IC301	N2	L600	E5	R311	*K5	R657	*F2	R835	K6	RB123	B4		
C300	*K4	C518	*J2	C712	*A3	C919	G2	CL215	N4	CL313	P2	CL415	L2	CL705	A4	CL1216	K4	CL1683	D2	IC302	*K3	L651	*D1	R312	N1	R658	*F2	R839	*E5	RB200	*N6		
C301	*K4	C519	J2	C713	C3	C920	G3	CL216	M4	CL314	P2	CL416	L2	CL706	A4	CL1217	K3	CL1684	E2	IC303	J4	L800	A5	R313	N1	R659	*F2	R841	E5	RB201	*M6		
C302	*K5	C520	*J2	C714	C3	C921	*H2	CL217	N4	CL315	P2	CL417	L2	CL707	A4	CL1218	L3	CL1685	E2	IC307	*N1	L801	A5	R314	P1	R660	*F2	R851	E4	RB202	*M6		
C303	*L4	C521	*K2	C715	B4	C922	*G3	CL218	N4	CL316	P3	CL418	L3	CL709	A4	CL1219	K4	CL1686	F2	IC308	*N2	L802	A5	R315	P1	R661	*E3	R852	G4	RB203	*M6		
C304	K5	C522	J3	C716	B4	C923	*H3	CL219	N4	CL317	P3	CL419	L3	CL710	A4	CL1220	K4	CL1687	F2	IC309	*N2	L803	A6	R316	P1	R662	*F2	R854	K5	RB204	*M6		
C305	P2	C523	J2	C717	*C3	C924	*H3	CL220	N4	CL318	P3	CL420	L3	CL711	A4	CL1221	K5	CL1688	F2	IC310	*H4	L804	*E5	R317	N1	R663	*F2	R855	*E4	RB205	*M3		
C306	*P3	C524	J2	C718	*C3	C925	*G2	CL221	N4	CL319	P3	CL421	L3	CL720	A3	CL1222	K3	CL1689	F2	IC311	*H4	L806	*C6	R318	N1	R666	*F2	R856	*E4	RB206	*M3		
C307	P2	C525	J2	C719	*B3	C926	*H2	CL222	N4	CL320	P3	CL422	L3	CL721	C3	CL1223	K3	CL1690	E2	IC312	*L4	L807	F5	R319	P1	R668	*F2	R857	E4	RB213	*K5		
C308	*P1	C526	K3	C720	*B3	C927	*G3	CL223	N4	CL321	M2	CL423	L3	CL723	B4	CL1224	K3	CL2200	N4	IC400	M2	L808	*D4	R320	P1	R670	*D2	R858	E4	RB214	*K5		
C309	*N1	C527	*L2	C721	*B3	C928	*G2	CL224	N4	CL322	M3	CL424	L2	CL724	C3	CL1600	F2	CL2201	M3	IC401	*K5			R321	P1	R671	*F1	R859	E4	RB215	*L5		
C310	*N2	C528	*L2	C722	*B3	C929	*G2	CL225	N3	CL323	N3	CL425	L2	CL725	A2	CL1601	F2	CL2202	M3	IC402	*J5	Q200	L5	R322	P3	R672	D1	R860	E4	RB216	*L5		
C311	*N2	C529	*K2	C723	*B3	C930	G2	CL226	N4	CL324	P3	CL426	L2	CL726	A2	CL1602	F2	CL2203	K5	IC404	*H5	Q400	F5	R323	P3	R673	*E1	R861	E4	RB217	*L5		
C312	*N3	C530	*J2	C724	*B3	C931	*G2	CL227	N4	CL325	M1	CL427	L2	CL730	A2	CL1603	F2	CL2204	K5	IC406	*J5	Q800	*C6	R324	N3	R674	*E1	R862	*E4	RB218	*L5		
C313	*N3	C531	*J2	C725	A2	C932	G3	CL228	N4	CL326	P3	CL428	L2	CL731	A2	CL1604	F2	CL2205	M6	IC407	H4	Q801	A5	R325	N3	R675	*E1	R863	*C6	RB300	J4		
C314	N1	C532	*J2	C726	A2	C933	*G3	CL229	N4	CL327	M1	CL429	L2	CL732	C2	CL1605	F2	CL2206	M6	IC408	*F5	Q802	*A5	R326	N3	R676	E1	R864	*A5	RB400	*G5		
C315	*K3	C533	K2	C727	A2	C934	*G2	CL230	N4	CL328	M1	CL430	L2	CL733	B2	CL1606	F2	CL2207	M6	IC410	*G5			R327	N3	R715	A4	R865	*A5	RB401	*G5		
C316	J3	C534	K1	C728	A2	C935	*G2	CL231	N4	CL329	M2	CL431	L2	CL737	B2	CL1607	F2	CL2208	M6	IC412	*G5	R1	*K5	R328	N3	R716	A4	R866	*B5	RB402	*G5		
C320	*N1	C535	K1	C729	*A2	C936	*H2	CL232	N4	CL330	M2	CL432	H5	CL738	C2	CL1608	F2	CL2209	M6	IC413	J5	R2	*D4	R329	N3	R717	A4	R867	*A4	RB403	*G5		
C321	*N2	C536	K1	C730	*A2	C937	*G3	CL233	N4	CL331	M2	CL433	H4	CL739	B4	CL1609	F2	CL2210	L6	IC500	K2	R3	G4	R330	N3	R718	A4	R868	K5	RB404	*G5		
C322	*N1	C537	L1	C731	*A1	C938	*H2	CL234	N4	CL332	M2	CL434	J4	CL740	A2	CL1610	F2	CL2211	M6	IC501	J2	R4	G4	R331	P3	R719	A4	R903	G3	RB500	*J2		
C323	*N3	C538	K1	C732	*A1	C939	*H3	CL235	N4	CL333	M2	CL435	J4	CL741	B2	CL1611	F2	CL2212	L6	IC502	J2	R5	G4	R332	P3	R720	A4	R904	G3	RB501	K1		
C324	*P2	C539	L1	C733	*A2			CL236	N4	CL334	M1	CL436	H4	CL800	G4	CL1612	F2	CL2213	M6	IC503	*L2	R100	N5	R333	P3	R721	A4	R905	G1	RB502	K2		
C325	*N2	C540	L1	C734	*A2	CL100	N6	CL237	M3	CL335	M1	CL437	H4	CL802	F4	CL1613	F2	CL2214	M6	IC504	*K2	R101	N5	R334	N1	R722	A4	R906	H1	RB503	K1		
C326	*P2	C541	L2	C735	*A1	CL101	N6	CL238	N3	CL336	M1	CL438	H4	CL819	F4	CL1614	F2			IC505	*J2	R102	P5	R335	N1	R723	A4	R907	G1	RB504	L2		
C327	*N2	C542	L1	C736	*A2	CL102	N6	CL239	N4	CL337	M2	CL439	H4	CL835	E5	CL1615	F2	CN13	L6	IC506	*K1	R103	*C5	R336	*K5	R724	A4	R908	G1	RB505	L2		
C328	P2	C543	M1	C737	C2	CL103	M6	CL240	N3	CL338	M2	CL440	H4	CL836	E5	CL1616	F2	CN14	G6	IC507	*L1	R105	*C5	R338	*L4	R725	A4	R909	H1	RB506	L2		
C329	*H4	C544	M1	C738	C2	CL104	M6	CL241	N3	CL339	M1	CL441	H4	CL837	E5	CL1617	F3	CN15	C6	IC508	*L1	R106	N5	R348	P2	R726	A4	R911	H2	RB507	L1		
C330	*H4	C545	M1	C739	B2	CL105	M6	CL242	M3	CL340	M2	CL442	H4	CL839	E4	CL1618	F2	CN16	D1	IC509	*M1	R107	N5	R349	*K4	R727	A4	R912	*G3	RB508	M1		

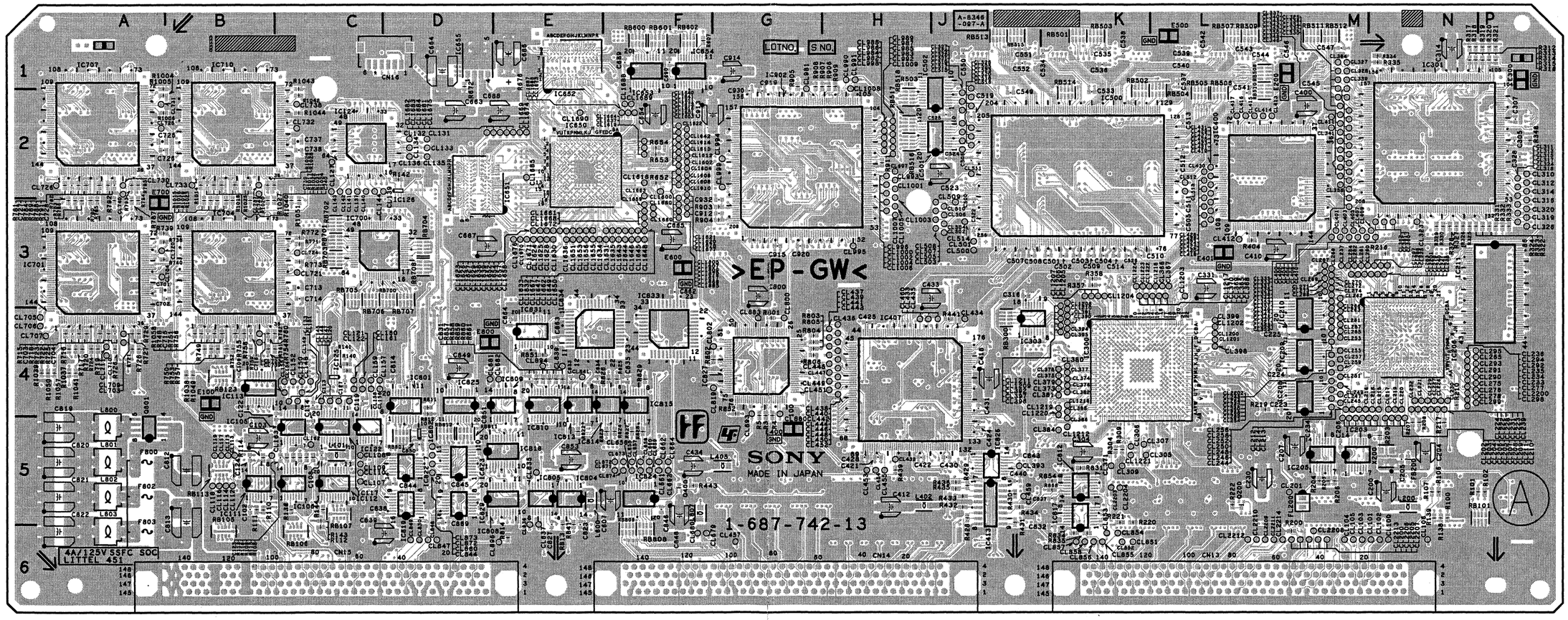

Components locations list; previous page

DPR-229 -A SIDE-
SUFFIX: -13

DPR-229
SUFFIX: -13

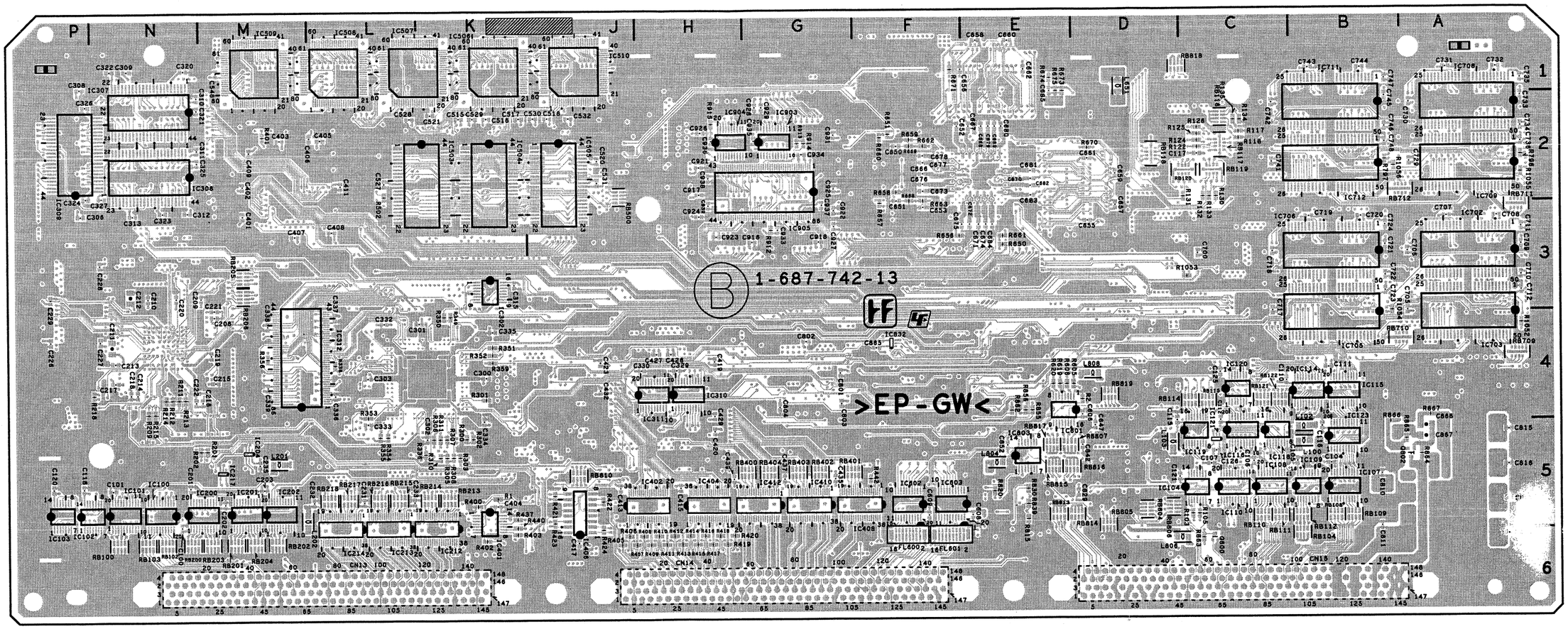

DPR-229 -B SIDE-
SUFFIX: -13

4-31 (c)

DPR-229 (1-687-742-12)

C100	*N5	C331	L3	C546	M1	C740	B2	CL106	N6	CL243	M3	CL341	M2	CL443	H4	CL841	E4	CL1619	F2	E100	B4	IC510	*J1	R113	C5	R355	*L5	R748	B4	R1006	A2	RB514	K2
C101	*N5	C332	*L4	C547	M1	C741	*C2	CL107	C5	CL244	M4	CL342	M2	CL444	H4	CL844	D5	CL1620	F3	E200	M1	IC601	*D4	R114	B5	R356	*M4	R749	B4	R1014	B2	RB515	J1
C102	B5	C333	*L4	C548	*M1	C742	*C2	CL108	C5	CL245	M4	CL343	M2	CL445	H4	CL847	D6	CL1621	F2	E300	P1	IC602	*F5	R115	C5	R357	K3	R750	B4	R1015	B3	RB516	H2
C103	B5	C334	*K4	C549	J2	C743	*B1	CL109	C5	CL246	M4	CL344	M2	CL446	H4	CL848	D6	CL1622	F2	E400	G5	IC603	*E5	R116	C5	R358	K3	R751	B4	R1016	B3	RB517	H2
C104	*B5	C335	*K4	C550	J1	C744	*B1	CL110	C5	CL247	M4	CL345	M2	CL447	H4	CL849	D6	CL1623	E3	E401	L3	IC650	E2	R117	*C2	R359	*K4	R752	B4	R1017	B2	RB518	H2
C105	*B5	C336	*L4	C551	J1	C745	*B2	CL112	B5	CL248	M4	CL346	M2	CL448	H4	CL850	D6	CL1624	E3	E500	L1	IC651	D2	R118	*C2	R400	*K5	R753	B4	R1018	B3	RB600	F1
C106	*C5	C337	*L4	C552	J1	C746	*B2	CL113	B5	CL249	M4	CL347	M2	CL449	H4	CL851	K6	CL1625	E3	E600	F3	IC652	E1	R122	*C2	R401	*M2	R754	B4	R1019	B3	RB601	F1
C107	*C5	C338	*M4	C606	*D4	C747	*B1	CL114	B5	CL250	M4	CL348	M2	CL450	H4	CL852	K6	CL1626	E3	E700	A3	IC653	F1	R124	*C2	R402	*K6	R755	B4	R1020	B3	RB602	F1
C108	C5	C339	*M4	C607	F5	C748	*B2	CL115	B5	CL251	M4	CL349	M2	CL451	H4	CL853	K6	CL1627	E3	E800	D4	IC654	F1	R125	*C2	R403	*K6	R756	B4	R1021	B2	RB700	D3
C109	B4	C400	M2	C608	*E5	C800	G3	CL116	B5	CL252	M4	CL350	M2	CL452	H4	CL854	K6	CL1628	E3			IC655	D1	R126	*C2	R404	L3	R757	B4	R1022	B2	RB701	C3
C110	*C4	C401	*M3	C609	*F5	C801	*G4	CL117	B5	CL253	M4	CL351	M2	CL453	H5	CL855	K6	CL1629	E3	F800	A5	IC700	C3	R130	*C2	R405	*J6	R758	B4	R1023	B3	RB702	C3
C111	*B4	C402	*M2	C650	*F2	C802	*G4	CL118	B5	CL254	M4	CL352	M2	CL454	H5	CL856	K6	CL1630	E3	F802	A5	IC701	A3	R131	*C2	R406	*J6	R759	B4	R1024	B2	RB703	C3
C112	*C4	C403	*M2	C651	*F2	C803	*G4	CL119	B5	CL255	M4	CL353	M2	CL455	H5	CL857	K6	CL1631	F3	F803	A6	IC702	*A3	R132	*C2	R407	*J6	R760	B4	R1025	B3	RB704	D3
C113	C4	C404	*K5	C652	*F2	C804	*G4	CL120	C4	CL256	M4	CL356	M2	CL457	G6	CL858	K6	CL1632	F3			IC703	*A3	R133	*C2	R408	*H6	R761	B4	R1026	B2	RB705	C3
C114	C5	C405	*L2	C653	*F3	C810	*B5	CL121	C4	CL257	M4	CL360	N3	CL459	J5	CL860	D5	CL1633	F3	FB200	N5	IC704	B3	R134	*C2	R409	*H6	R762	B4	R1027	B3	RB706	C3
C115	*D4	C406	*L2	C654	F2	C811	*B5	CL122	C4	CL258	M4	CL361	N3	CL460	H4	CL872	D5	CL1634	E3			IC705	*B3	R135	*C2	R410	*H6	R771	C3	R1028	B2	RB707	D3
C116	*B5	C407	*M3	C655	*D3	C812	B5	CL127	C2	CL259	M4	CL362	N3	CL500	J3	CL873	D5	CL1635	F3	FL200	M5	IC706	*B3	R136	C5	R411	*H6	R772	C3	R1037	A4	RB708	D3
C117	*C2	C408	*L3	C656	*F1	C813	B5	CL131	D2	CL260	M4	CL363	M2	CL501	J3	CL880	G4	CL1636	E3	FL600	*F6	IC707	A2	R138	N5	R412	*H6	R773	C3	R1038	B4	RB709	*A4
C118	*P5	C409	*M2	C657	*D3	C814	D4	CL132	D2	CL261	M4	CL364	M1	CL502	J3	CL883	G4	CL1637	F2	FL601	*F6	IC708	*A1	R139	N5	R413	*H6	R781	A2	R1039	A4	RB710	*A4
C119	C4	C410	M3	C658	*E1	C815	*A5	CL133	D2	CL262	M4	CL365	L3	CL503	J3	CL893	G4	CL1638	E3			IC709	*A2	R140	C4	R414	*H6	R782	A3	R1040	C3	RB711	*A3
C120	*P5	C411	*L2	C659	*D2	C816	*A5	CL134	D2	CL263	M4	CL366	L3	CL504	J3	CL894	E4	CL1639	E3	IC100	*N5	IC710	B2	R141	C4	R415	*H6	R783	A3	R1041	A4	RB712	*A2
C121	*D5	C412	H5	C660	*E1	C817	*A5	CL135	D2	CL264	M4	CL367	L3	CL505	J3	CL896	E6	CL1640	F2	IC101	*N5	IC711	*B1	R142	D2	R416	*H6	R784	A2	R1042	C2	RB801	D5
C122	B4	C413	*J5	C661	*D2	C818	*A6	CL136	D2	CL265	N4	CL368	L3	CL506	J3	CL981	G1	CL1641	F2	IC102	*P5	IC712	*B2	R143	C5	R417	*H6	R785	A3	R1043	C1	RB804	*D5
C123	C5	C415	*H5	C662	*E1	C819	A5	CL137	C2	CL266	M3	CL369	L3	CL507	J3	CL982	H2	CL1642	F2	IC103	*P5	IC801	D5	R144	C5	R418	*H6	R786	A3	R1044	C2	RB805	*D5
C124	B5	C417	*J6	C663	D2	C820	A5	CL139	C2	CL267	M3	CL370	K3	CL508	J3	CL983	H2	CL1643	F3	IC104	*C5	IC802	D5	R200	M6	R419	*H6	R787	A3	R1049	B4	RB806	*D5
C125	*C4	C418	J4	C664	D1	C821	A5	CL140	C2	CL268	M3	CL371	K5	CL509	J3	CL984	H2	CL1644	F3	IC105	C5	IC803	*E5	R201	*M5	R420	*H6	R788	A2	R1050	A4	RB807	*E5
C126	*C5	C419	*H4	C665	F3	C822	A6	CL141	C2	CL269	M3	CL373	K4	CL510	J3	CL985	H2	CL1645	F3	IC106	C5	IC804	E5	R202	*M5	R421	*J5	R789	A2	R1051	C3	RB808	F6
C127	C4	C420	*H5	C666	*F2	C823	E5	CL142	C2	CL270	M3	CL374	K4	CL511	J2	CL986	H2	CL1646	F3	IC107	*B5	IC805	E5	R203	N5	R422	*J5	R790	A3	R1052	*A4	RB809	F6
C200	N5	C421	H5	C667	*E2	C827	E5	CL143	C2	CL271	M3	CL375	K4	CL512	L2	CL987	H2	CL1647	F3	IC108	*C5	IC808	D5	R204	M5	R423	*J5	R791	A2	R1053	*C3	RB810	*J5
C201	*N5	C422	H5	C668	*E2	C829	*D5	CL144	C2	CL272	M3	CL376	K4	CL513	L2	CL988	H2	CL1648	F3	IC109	*B5	IC809	D5	R205	M5	R424	*J5	R792	A3	R1054	*B3	RB811	D5
C202	*M5	C423	*J4	C669	*E2	C831	E4	CL145	C4	CL273	M3	CL377	K4	CL514	J3	CL989	H2	CL1649	F3	IC110	*C5	IC810	E5	R206	M5	R428	J5	R793	A2	R1055	*A2	RB812	D5
C203	*M5	C424	J5	C670	*E2	C832	K6	CL146	C4	CL274	M3	CL378	K4	CL515	J2	CL990	H1	CL1650	F3	IC111	B5	IC812	K5	R207	N5	R429	J5	R794	A3	R1056	*B2	RB813	*E5
C204	N5	C425	H4	C671	*E3	C833	E4	CL147	C4	CL275	N4	CL379	K4	CL516	J2	CL991	H1	CL1651	E3	IC112	C5	IC813	E5	R208	N5	R430	J5	R795	A2	R1057	A4	RB814	*D5
C205	N5	C426	*H4	C672	*E3	C834	E4	CL148	C4	CL276	N4	CL380	K4	CL517	J2	CL992	H2	CL1652	E3	IC113	B4	IC814	E5	R209	*N4	R431	J5	R796	*A2	R1058	B4	RB815	*E5
C206	M5	C427	*H4	C673	*F2	C835	F4	CL149	C4	CL277	N4	CL381	K4	CL518	J2	CL993	H2	CL1653	E3	IC114	*B4	IC815	F5	R210	N4	R432	J5	R797	*B2			RB816	*E5
C207	M5	C428	H5	C674	*E3	C837	K5	CL150	C4	CL278	N4	CL382	K4	CL519	J2	CL994	G2	CL1654	E3	IC115	*B4	IC817	K5	R211	*N4	R433	J5	R801	G4	RB100	*N6	RB817	*E5
C208	*M4	C429	*H4	C675	*E3	C838	C5	CL151	C4	CL279	M3	CL384	K5	CL520	J2	CL995	H3	CL1655	E3	IC116	*C5	IC818	D5	R212	*N4	R434	J5	R802	F4	RB101	P5	RB818	*D1
C209	*M3	C430	J5	C676	*F2	C839	C6	CL152	C4	CL280	M3	CL385	K4	CL521	J2	CL996	H2	CL1656	E3	IC117	C5	IC819	D5	R213	*N4	R435	J5	R803	G4	RB102	*N6	RB819	*D4
C210	*N3	C431	J4	C677	*F2	C842	*D5	CL153	C4	CL281	M3	CL386	K5	CL522	J2	CL997	H2	CL1657	E3	IC118	*C5	IC822	D5	R214	*N4	R436	J5	R804	G4	RB103	*N6		
C211	*N4	C432	*J4	C678	*F2	C843	J5	CL154	C4	CL282	M3	CL390	K4	CL523	J2	CL998	H2	CL1658	E3	IC119	*C5	IC823	D5	R215	*N4	R437	*K5	R805	G4	RB104	*B6	X200	N5
C212	*N3	C433	H3	C679	*E2	C844	D5	CL155	C4	CL283	M3	CL391	K4	CL524	J2	CL999	G2	CL1659	F3	IC120	*C4	IC824	F5	R216	N3	R439	H5	R806	G4	RB105	B6		
C213	*N4	C434	F5	C680	*E2	C845	D5	CL156	C4	CL284	M3	CL392	K4	CL525	J2	CL1000	H2	CL1660	F3	IC121	*C5	IC825	D4	R217	N5	R440	*K5	R811	D4	RB106	C6	*:B SIDE	
C214	*N4	C435	*G5	C681	*E2	C846	F5	CL157	C4	CL285	M4	CL393	J5	CL526	J1	CL1001	H2	CL1661	F3	IC122	C5	IC826	J5	R218	*N4	R441	J4	R812	D4	RB107	C5		
C215	*M4	C437	*G5	C682	*E2	C847	*D5	CL158	C4	CL286	M3	CL394	K4	CL527	J2	CL1002	H2	CL1662	F3	IC123	*B5	IC827	G4	R219	M4	R442	*F5	R813	E5	RB108	*B5		
C216	*M4	C439	*H5	C683	*E2	C848	F5	CL159	C4	CL287	M4	CL395	K4	CL655	F5	CL1003	H2	CL1663	F2	IC124	C2	IC829	D5	R220	K5	R443	F5	R814	E6	RB109	*B5		
C217	*N4	C440	J5	C684	*E3	C849	D4	CL160	C4	CL288	M4	CL396	K4	CL656	F5	CL1004	H3	CL1664	F2	IC125	C4	IC831	E4	R221	K5	R502	*L2	R815	*E5	RB110	*C5		
C218	*N4	C500	J3	C685	*E1	C850	D5	CL161	C4	CL289	M4	CL397	K4	CL657	F5	CL1005	H3	CL1665	F3	IC126	D2	IC832	*F4	R222	L5	R503	H1	R820	*E5	RB111	*C5		
C219	*M4	C501	K3	C686	E1	C851	D4	CL162	C5	CL290	N4	CL398	L4	CL658	F5	CL1006	H3	CL1666	F3	IC200	*N5	IC833	F4	R300	*K5	R605	*D4	R822	E5	RB112	*B5		
C220	*N3	C502	K3	C687	D3	C852	*E5	CL163	B5	CL291	N4	CL399	L4	CL659	F5	CL1007	H3	CL1667	F3	IC201	*M5	IC834	E4	R301	*K4	R606	*E4	R823	F5	RB113	B5		
C221	*M3	C503	K3	C688	E2	C853	E5	CL200	M6	CL292	N4	CL400	M3	CL660	F5	CL1008	H1	CL1668	F3	IC202	*M5	IC902	G2	R302	*K5	R607	F1	R824	F5	RB114	*C4		
C222	*N4	C504	K3	C689	F1	C862	F3	CL201	M5	CL293	N4	CL401	M3	CL661	F5	CL1009	H2	CL1669	E2	IC203	M5	IC903	*G2	R303	*K5	R619	*E4	R825	F4	RB115	*C4		
C223	M4	C505	L3	C690	F1	C863	E4	CL202	M5	CL294	N4	CL402	M3	CL662	F5	CL1200	L4	CL1670	E3	IC204	*M5	IC904	*H2	R304	K5	R620	*E4	R826	F4	RB116	*C2		
C224	M4	C506	J2	C700	*C3	C864	E4	CL203	M5	CL295	N4	CL403	M3	CL663	F5	CL1201	L4	CL1671	E3	IC205	M5	IC905	*G2	R305	*K5	R650	*E3	R827	F5	RB117	*C2		
C225	M4	C507	J3	C701	A3	C865	*F4	CL204	M5	CL296	N3	CL404	M3	CL664	F5	CL1202	L4	CL1672	F3	IC206	N4			R306	*K5	R651	*F2	R828	F5	RB118	*D2		
C226	*P4	C508	J3	C702	A3	C867	*A5	CL205	M5	CL297	N3	CL405	M3	CL671	F5	CL1203	L3	CL1673	F2	IC208	M4	L100	*B5	R307	*K5	R652	F2	R829	F4	RB119	*C2		
C227	*N4	C509	K3	C703	A4	C868	*A5	CL206	M5	CL298	N4	CL406	M3	CL672	F5	CL1204	K3	CL1674	E2	IC209	M4	L101	C5	R308	*K5	R653	F2	R830	*E5	RB120	*C2		
C228	*N3	C510	K3	C704	A4	C869	D5	CL207	N5	CL299	N4	CL407	M3	CL673	F5	CL1205	K3	CL1675	E2	IC210	M4	L102	*B5	R309	K5	R654	F2	R831	K5	RB121	*C4		
C229	*P3	C511	L3	C705	*A3	C912	G3	CL208	N5	CL305	K5	CL408	M3	CL674	F5	CL1206	K3	CL1676	E3	IC211	N3	L103	*D5	R310	*K5	R656	*F3	R834	K6	RB122	*C4		
C230	M5	C512	L2	C706	*A3	C913	F2	CL209	N5	CL306	K5	CL409	N3	CL679	F6	CL1207	K3	CL1677	F3	IC212	*K5	L200	N5	R311	*K5	R657	*F2	R835	K6	RB123	B4		
C231	*L5	C513	L2	C707	*A3	C914	G1	CL210	N5	CL307	K5	CL410	N3	CL680	F6	CL1208	K3	CL1678	F3	IC213	*L5	L201	*M5	R312	N1	R658	*F2	R839	*E5	RB200	*N6		
C232	*L5	C514	K3	C708	*A3	C915	G3	CL211	N5	CL309	K5	CL411	M2	CL681	D4	CL1209	K4	CL1679	F2	IC214	*L5	L202	*M5	R313	N1	R659	*F2	R841	E5	RB201	*M6		
C233	*L5	C515	*K2	C709	*A3	C916	*G3	CL212	M4	CL310	P2	CL412	L3	CL682	E4	CL1210	K4	CL1680	F3	IC217	*M5	L402	H5	R314	P1	R660	*F2	R851	E4	RB202	*M6		
C234	M5	C516	*K2	C710	*A3	C917	*H2	CL213	M4	CL311	P2	CL413	M2	CL703	A4	CL1211	K3	CL1681	E2	IC300	K4	L405	G5	R315	P1	R661	*E3	R852	G4	RB203	*M6		
C235	*M5	C517	*K2	C711	*A3	C918	*G3	CL214	M4	CL312	P2	CL414	M2	CL704	A3	CL1212	K5	CL1682	D2	IC301	N2	L600	E5	R316	P1	R662	*F2	R854	K5	RB204	*M6		
C300	*K4	C518	*J2	C712	*A3	C919	G2	CL215	N4	CL313	P2	CL415	L2	CL705	A4	CL1216	K4	CL1683	D2	IC302	*K3	L651	*D1	R317	N1	R663	*F2	R855	*E4	RB205	*M3		
C301	*K4	C519	J2	C713	C3	C920	G3	CL216	M4	CL314	P2	CL416	L2	CL706	A4	CL1217	K3	CL1684	E2	IC303	J4	L800	A5	R318	N1	R666	*F2	R856	*E4	RB206	*M3		
C302	*K5	C520	*J2	C714	C3	C921	*H2	CL217	N4	CL315	P2	CL417	L2	CL707	A4	CL1218	L3	CL1685	E2	IC307	*N1	L801	A5	R319	P1	R668	*F2	R857	E4	RB213	*K5		
C303	*L4	C521	*K2	C715	B4	C922	*G3	CL218	N4	CL316	P3	CL418	L3	CL709	A4	CL1219	K4	CL1686	F2	IC308	*N2	L802	A5	R320	P1	R670	*D2	R858	E4	RB214	*K5		
C304	K5	C522	J3	C716	B4	C923	*H3	CL219	N4	CL317	P3	CL419	L3	CL710	A4	CL1220	K4	CL1687	F2	IC309	*N2	L803	A6	R321	P1	R671	*F1	R859	E4	RB215	*L5		
C305	P2	C523	J2	C717	*C3	C924	*H3	CL220	N4	CL318	P3	CL420	L3	CL711	A4	CL1221	K5	CL1688	F2	IC310	*H4	L804	*E5	R322	P3	R672	D1	R860	E4	RB216	*L5		
C306	*P3	C524	J2	C718	*C3	C925	*G2	CL221	N4	CL319	P3	CL421	L3	CL720	A3	CL1222	K3	CL1689	F2	IC311	*H4	L806	*C6	R323	P3	R673	*E1	R861	E4	RB217	*L5		
C307	P2	C525	J2	C719	*B3	C926	*H2	CL222	N4	CL320	P3	CL422	L3	CL721	C3	CL1223	K3	CL1690	E2	IC312	*L4	L807	F5	R324	N3	R674	*E1	R862	*E4	RB218	*L5		
C308	*P1	C526	K3	C720	*B3	C927	*G3	CL223	N4	CL321	M2	CL423	L3	CL723	B4	CL1224	K3	CL2200	N4	IC400	M2	L808	*D4	R325	N3	R675	*E1	R863	*C6	RB300	J4		
C309	*N1	C527	*L2	C721	*B3	C928	*G2	CL224	N4	CL322	M3	CL424	L2	CL724	C3	CL1600	F2	CL2201	M3	IC401	*K5			R326	N3	R676	E1	R864	*A5	RB400	*G5		
C310	*N2	C528	*L2	C722	*B3	C929	*G2	CL225	N3	CL323	N3	CL425	L2	CL725	A2	CL1601	F2	CL2202	M3	IC402	*J5	Q200	L5	R327	N3	R715	A4	R865	*A5	RB401	*G5		
C311	*N2	C529	*K2	C723	*B3	C930	G2	CL226	N4	CL324	P3	CL426	L2	CL726	A2	CL1602	F2	CL2203	K5	IC404	*H5	Q400	F5	R328	N3	R716	A4	R866	*B5	RB402	*G5		
C312	*N3	C530	*J2	C724	*B3	C931	*G2	CL227	N4	CL325	M1	CL427	L2	CL730	A2	CL1603	F2	CL2204	K5	IC406	*J5	Q800	*C6	R329	N3	R717	A4	R867	*A4	RB403	*G5		
C313	*N3	C531	*J2	C725	A2	C932	G3	CL228	N4	CL326	P3	CL428	L2	CL731	A2	CL1604	F2	CL2205	M6	IC407	H4	Q801	A5	R330	N3	R718	A4	R868	K5	RB404	*G5		
C314	N1	C532	*J2	C726	A2	C933	*G3	CL229	N4	CL327	M1	CL429	L2	CL732	C2	CL1605	F2	CL2206	M6	IC408	*F5	Q802	*A5	R331	P3	R719	A4	R903	G3	RB500	*J2		
C315	*K3	C533	K2	C727	A2	C934	*G2	CL230	N4	CL328	M1	CL430	L2	CL733	B2	CL1606	F2	CL2207	M6	IC410	*G5			R332	P3	R720	A4	R904	G3	RB501	K1		
C316	J3	C534	K1	C728	A2	C935	*G2	CL231	N4	CL329	M2	CL431	L2	CL737	B2	CL1607	F2	CL2208	M6	IC412	*G5	R100	N5	R333	P3	R721	A4	R905	G1	RB502	K2		
C320	*N1	C535	K1	C729	*A2	C936	*H2	CL232	N4	CL330	M2	CL432	H5	CL738	C2	CL1608	F2	CL2209	M6	IC413	J5	R101	N5	R334	N1	R722	A4	R906	H1	RB503	K1		
C321	*N2	C536	K1	C730	*A2	C937	*G3	CL233	N4	CL331	M2	CL433	H4	CL739	B4	CL1609	F2	CL2210	L6	IC500	K2	R102	P5	R335	N1	R723	A4	R907	G1	RB504	L2		
C322	*N1	C537	L1	C731	*A1	C938	*H2	CL234	N4	CL332	M2	CL434	J4	CL740	A2	CL1610	F2	CL2211	M6	IC501	J2	R103	*C5	R336	*K5	R724	A4	R908	G1	RB505	L2		
C323	*N3	C538	K1	C732	*A1	C939	*H3	CL235	N4	CL333	M2	CL435	J4	CL741	B2	CL1611	F2	CL2212	L6	IC502	J2	R105	*C5	R338	*L4	R725	A4	R909	H1	RB506	L2		
C324	*P2	C539	L1	C733	*A2			CL236	N4	CL334	M1	CL436	H4	CL800	G4	CL1612	F2	CL2213	M6	IC503	*L2	R106	N5	R348	P2	R726	A4	R911	H2	RB507	L1		
C325	*N2	C540	L1	C734	*A2	CL100	N6	CL237	M3	CL335	M1	CL437	H4	CL802	F4	CL1613	F2	CL2214	M6	IC504	*K2	R107	N5	R349	*K4	R727	A4	R912	*G3	RB508	M1		
C326	*P2	C541	L2	C735	*A1	CL101	N6	CL238	N3	CL336	M1	CL438	H4	CL819	F4	CL1614	F2			IC505	*J2	R108	C5	R350	*K4	R728	A4	R913	*G2	RB509	L1		
C327	*N2	C542	L1	C736	*A2	CL102	N6	CL239	N4	CL337	M2	CL439	H4	CL835	E5	CL1615	F2	CN13	L6	IC506	*K1	R109	C5	R351	*K4	R729	A4	R914	*G2	RB510	M2		
C328	P2	C543	M1	C737	C2	CL103	M6	CL240	N3	CL338	M2	CL440	H4	CL836	E5	CL1616	F2	CN14	G6	IC507	*L1	R110	B5	R352	*K4	R738	A3	R915	*H2	RB511	M1		
C329	*H4	C544	M1	C738	C2	CL104	M6	CL241	N3	CL339	M1	CL441	H4	CL837	E5	CL1617	F3	CN15	C6	IC508	*L1	R111	B5	R353	*L4	R739	A3	R1004	A2	RB512	M1		
C330	*H4	C545	M1	C739	B2	CL105	M6	CL242	M3	CL340	M2	CL442	H4	CL839	E4	CL1618	F2	CN16	D1	IC509	*M1	R112	C6	R354	*L5	R740	A3	R1005	A1	RB513	J1		

DPR-229
SUFFIX: -12

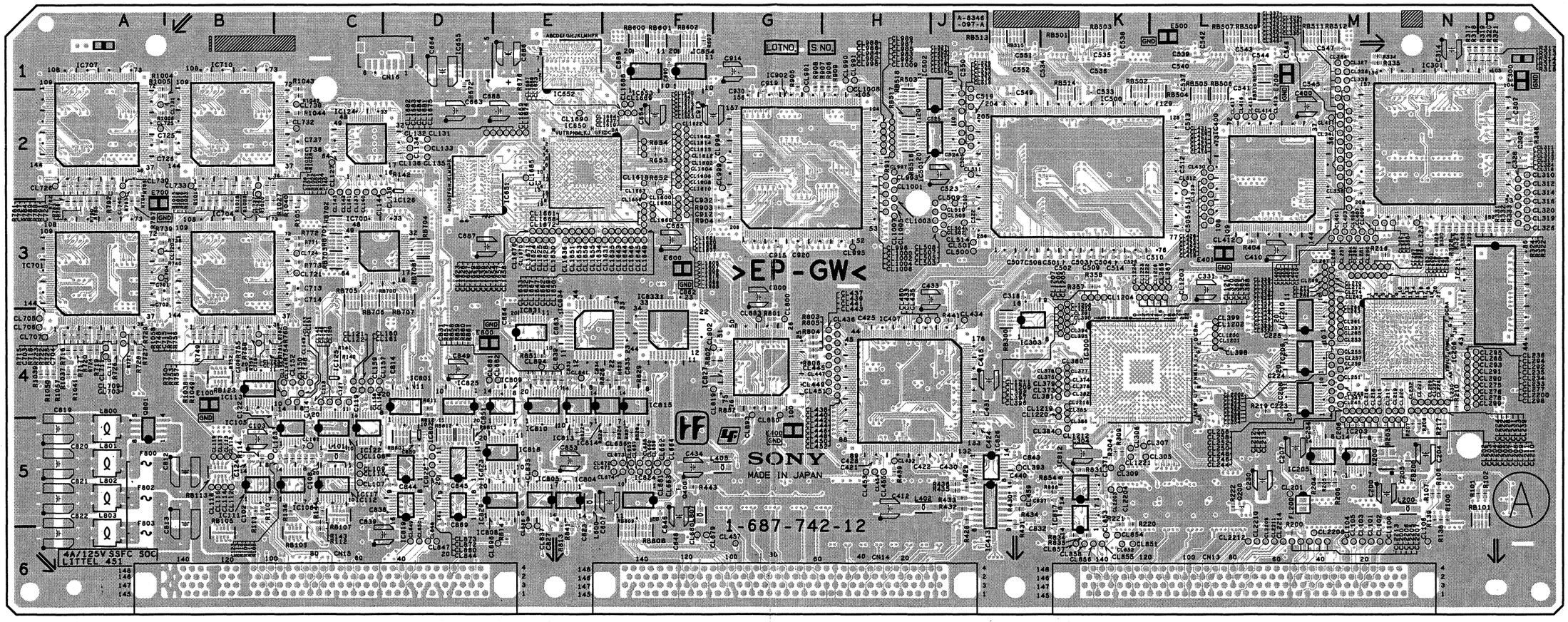

Components locations list; previous page

DPR-229 -A SIDE-
SUFFIX: -12

4-30 (b)

DPR-229
SUFFIX: -12

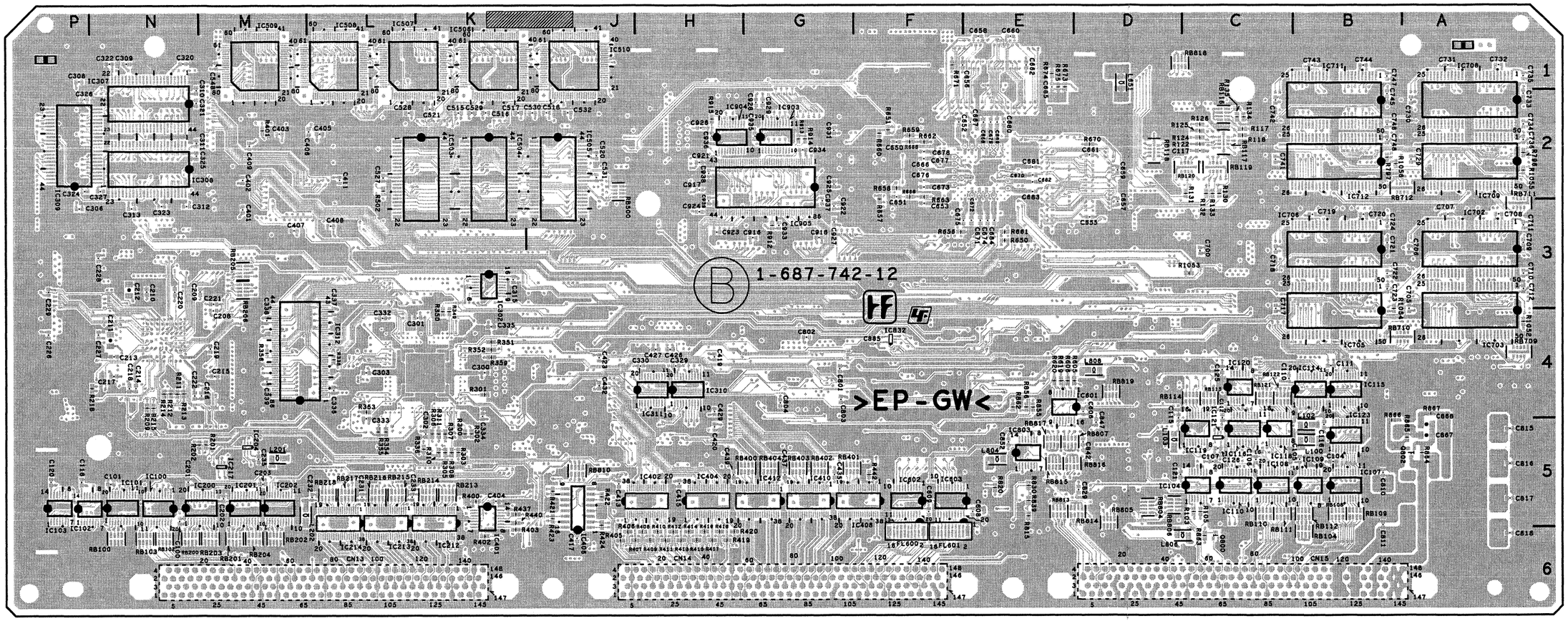

DPR-229 -B SIDE-
SUFFIX: -12

4-31 (b)

DPR-229 (1-687-742-11)

C100	*N5	C331	L3	C546	M1	C740	B2	CL106	N6	CL243	M3	CL341	M2	CL443	H4	CL841	E4	CL1619	F2			IC509	*M1	R112	C5	R357	K3	R751	B4	R1016	B3	RB517	H2
C101	*N5	C332	*L4	C547	M1	C741	*C2	CL107	C5	CL244	M4	CL342	M2	CL444	H4	CL844	D5	CL1620	F3	E100	B4	IC510	*J1	R113	C5	R358	K3	R752	B4	R1017	B2	RB518	H2
C102	B5	C333	*L4	C548	*M1	C742	*C2	CL108	C5	CL245	M4	CL343	M2	CL445	H4	CL847	D6	CL1621	F2	E200	M1	IC601	*D4	R114	B5	R359	*K4	R753	B4	R1018	B3	RB600	F1
C103	B5	C334	*K4	C549	J2	C743	*B1	CL109	C5	CL246	M4	CL344	M2	CL446	H4	CL848	D6	CL1622	F2	E300	P1	IC602	*F5	R115	C5	R400	*K5	R754	B4	R1019	B3	RB601	F1
C104	*B5	C335	*K4	C550	J1	C744	*B1	CL110	C5	CL247	M4	CL345	M2	CL447	H4	CL849	D6	CL1623	E3	E400	G5	IC603	*E5	R116	C5	R401	*M2	R755	B4	R1020	B3	RB602	F1
C105	*B5	C336	*L4	C551	J1	C745	*B2	CL112	B5	CL248	M4	CL346	M2	CL448	H4	CL850	D6	CL1624	E3	E401	L3	IC650	E2	R117	*C2	R402	*K6	R756	B4	R1021	B2	RB700	D3
C106	*C5	C337	*L4	C552	J1	C746	*B2	CL113	B5	CL249	M4	CL347	M2	CL449	H4	CL851	K6	CL1625	E3	E500	L1	IC651	D2	R118	*C2	R403	*K6	R757	B4	R1022	B2	RB701	C3
C107	*C5	C338	*M4	C606	*D4	C747	*B1	CL114	B5	CL250	M4	CL348	M2	CL450	H4	CL852	K6	CL1626	E3	E600	F3	IC652	E1	R122	*C2	R404	L3	R758	B4	R1023	B3	RB702	C3
C108	C5	C339	*M4	C607	F5	C748	*B2	CL115	B5	CL251	M4	CL349	M2	CL451	H4	CL853	K6	CL1627	E3	E700	A3	IC653	F1	R124	*C2	R405	*J6	R759	B4	R1024	B2	RB703	C3
C109	B4	C400	M2	C608	*E5	C800	G3	CL116	B5	CL252	M4	CL350	M2	CL452	H4	CL854	K6	CL1628	E3	E800	D4	IC654	F1	R125	*C2	R406	*J6	R760	B4	R1025	B3	RB704	D3
C110	*C4	C401	*M3	C609	*F5	C801	*G4	CL117	B5	CL253	M4	CL351	M2	CL453	H5	CL855	K6	CL1629	E3			IC655	D1	R126	*C2	R407	*J6	R761	B4	R1026	B2	RB705	C3
C111	*B4	C402	*M2	C650	*F2	C802	*G4	CL118	B5	CL254	M4	CL352	M2	CL454	H5	CL856	K6	CL1630	E3	F800	A5	IC700	C3	R130	*C2	R408	*H6	R762	B4	R1027	B3	RB706	C3
C112	*C4	C403	*M2	C651	*F2	C803	*G4	CL119	B5	CL255	M4	CL353	M2	CL455	H5	CL857	K6	CL1631	F3	F802	A5	IC701	A3	R131	*C2	R409	*H6	R771	C3	R1028	B2	RB707	D3
C113	C4	C404	*K5	C652	*F2	C804	*G4	CL120	C4	CL256	M4	CL356	M2	CL457	G6	CL858	K6	CL1632	F3	F803	A6	IC702	*A3	R132	*C2	R410	*H6	R772	C3	R1037	A4	RB708	D3
C114	C5	C405	*L2	C653	*F3	C810	*B5	CL121	C4	CL257	M4	CL360	N3	CL459	J5	CL860	D5	CL1633	F3			IC703	*A3	R133	*C2	R411	*H6	R773	C3	R1038	B4	RB709	*A4
C115	*D4	C406	*L2	C654	F2	C811	*B5	CL122	C4	CL258	M4	CL361	N3	CL460	H4	CL872	D5	CL1634	E3	FB200	N5	IC704	B3	R134	*C2	R412	*H6	R781	A2	R1039	A4	RB710	*A4
C116	*B5	C407	*M3	C655	*D3	C812	B5	CL127	C2	CL259	M4	CL362	N3	CL500	J3	CL873	D5	CL1635	F3			IC705	*B3	R135	*C2	R413	*H6	R782	A3	R1040	C3	RB711	*A3
C117	*C2	C408	*L3	C656	*F1	C813	B5	CL131	D2	CL260	M4	CL363	M2	CL501	J3	CL880	G4	CL1636	E3	FL200	M5	IC706	*B3	R136	C5	R414	*H6	R783	A3	R1041	A4	RB712	*A2
C118	*P5	C409	*M2	C657	*D3	C814	D4	CL132	D2	CL261	M4	CL364	M1	CL502	J3	CL883	G4	CL1637	F2	FL600	*F6	IC707	A2	R138	N5	R415	*H6	R784	A2	R1042	C2	RB801	D5
C119	C4	C410	M3	C658	*E1	C815	*A5	CL133	D2	CL262	M4	CL365	L3	CL503	J3	CL893	G4	CL1638	E3	FL601	*F6	IC708	*A1	R139	N5	R416	*H6	R785	A3	R1043	C1	RB804	*D5
C120	*P5	C411	*L2	C659	*D2	C816	*A5	CL134	D2	CL263	M4	CL366	L3	CL504	J3	CL894	E4	CL1639	E3			IC709	*A2	R140	C4	R417	*H6	R786	A3	R1044	C2	RB805	*D5
C121	*D5	C412	H5	C660	*E1	C817	*A5	CL135	D2	CL264	M4	CL367	L3	CL505	J3	CL896	E6	CL1640	F2	IC100	*N5	IC710	B2	R141	C4	R418	*H6	R787	A3	R1049	B4	RB806	*D5
C122	B4	C413	*J5	C661	*D2	C818	*A6	CL136	D2	CL265	N4	CL368	L3	CL506	J3	CL981	G1	CL1641	F2	IC101	*N5	IC711	*B1	R142	D2	R419	*H6	R788	A2	R1050	A4	RB807	*E5
C123	C5	C415	*H5	C662	*E1	C819	A5	CL137	C2	CL266	M3	CL369	L3	CL507	J3	CL982	H2	CL1642	F2	IC102	*P5	IC712	*B2	R200	M6	R420	*H6	R789	A2	R1051	C3	RB808	F6
C124	B5	C417	*J6	C663	D2	C820	A5	CL139	C2	CL267	M3	CL370	K3	CL508	J3	CL983	H2	CL1643	F3	IC103	*P5	IC801	D5	R201	*M5	R421	*J5	R790	A3	R1052	*A4	RB809	F6
C125	*C4	C418	J4	C664	D1	C821	A5	CL140	C2	CL268	M3	CL371	K5	CL509	J3	CL984	H2	CL1644	F3	IC104	*C5	IC802	D5	R202	*M5	R422	*J5	R791	A2	R1053	*C3	RB810	*J5
C126	*C5	C419	*H4	C665	F3	C822	A6	CL141	C2	CL269	M3	CL373	K4	CL510	J3	CL985	H2	CL1645	F3	IC105	C5	IC803	*E5	R203	N5	R423	*J5	R792	A3	R1054	*B3	RB811	D5
C127	C4	C420	*H5	C666	*F2	C823	E5	CL142	C2	CL270	M3	CL374	K4	CL511	J2	CL986	H2	CL1646	F3	IC106	C5	IC804	E5	R204	M5	R424	*J5	R793	A2	R1055	*A2	RB812	D5
C200	N5	C421	H5	C667	*E2	C827	E5	CL143	C2	CL271	M3	CL375	K4	CL512	L2	CL987	H2	CL1647	F3	IC107	*B5	IC805	E5	R205	M5	R428	J5	R794	A3	R1056	*B2	RB813	*E5
C201	*N5	C422	H5	C668	*E2	C829	*D5	CL144	C2	CL272	M3	CL376	K4	CL513	L2	CL988	H2	CL1648	F3	IC108	*C5	IC808	D5	R206	M5	R429	J5	R795	A2	R1057	A4	RB814	*D5
C202	*M5	C423	*J4	C669	*E2	C831	E4	CL145	C4	CL273	M3	CL377	K4	CL514	J3	CL989	H2	CL1649	F3	IC109	*B5	IC809	D5	R207	N5	R430	J5	R796	*A2	R1058	B4	RB815	*E5
C203	*M5	C424	J5	C670	*E2	C832	K6	CL146	C4	CL274	M3	CL378	K4	CL515	J2	CL990	H1	CL1650	F3	IC110	*C5	IC810	E5	R208	N5	R431	J5	R797	*B2			RB816	*E5
C204	N5	C425	H4	C671	*E3	C833	E4	CL147	C4	CL275	N4	CL379	K4	CL516	J2	CL991	H1	CL1651	E3	IC111	B5	IC812	K5	R209	*N4	R432	J5	R801	G4	RB100	*N6	RB817	*E5
C205	N5	C426	*H4	C672	*E3	C834	E4	CL148	C4	CL276	N4	CL380	K4	CL517	J2	CL992	H2	CL1652	E3	IC112	C5	IC813	E5	R210	N4	R433	J5	R802	F4	RB101	P5	RB818	*D1
C206	M5	C427	*H4	C673	*F2	C835	F4	CL149	C4	CL277	N4	CL381	K4	CL518	J2	CL993	H2	CL1653	E3	IC113	B4	IC814	E5	R211	*N4	R434	J5	R803	G4	RB102	*N6	RB819	*D4
C207	M5	C428	H5	C674	*E3	C837	K5	CL150	C4	CL278	N4	CL382	K4	CL519	J2	CL994	G2	CL1654	E3	IC114	*B4	IC815	F5	R212	*N4	R435	J5	R804	G4	RB103	*N6		
C208	*M4	C429	*H4	C675	*E3	C838	C5	CL151	C4	CL279	M3	CL384	K5	CL520	J2	CL995	H3	CL1655	E3	IC115	*B4	IC817	K5	R213	*N4	R436	J5	R805	G4	RB104	*B6	X200	N5
C209	*M3	C430	J5	C676	*F2	C839	C6	CL152	C4	CL280	M3	CL385	K4	CL521	J2	CL996	H2	CL1656	E3	IC116	*C5	IC818	D5	R214	*N4	R437	*K5	R806	G4	RB105	B6		
C210	*N3	C431	J4	C677	*F2	C842	*D5	CL153	C4	CL281	M3	CL386	K5	CL522	J2	CL997	H2	CL1657	E3	IC117	C5	IC819	D5	R215	*N4	R439	H5	R811	D4	RB106	C6	*:B SIDE	
C211	*N4	C432	*J4	C678	*F2	C843	J5	CL154	C4	CL282	M3	CL390	K4	CL523	J2	CL998	H2	CL1658	E3	IC118	*C5	IC822	D5	R216	N3	R440	*K5	R812	D4	RB107	C5		
C212	*N3	C433	H3	C679	*E2	C844	D5	CL155	C4	CL283	M3	CL391	K4	CL524	J2	CL999	G2	CL1659	F3	IC119	*C5	IC823	D5	R217	N5	R441	J4	R813	E5	RB108	*B5		
C213	*N4	C434	F5	C680	*E2	C845	D5	CL156	C4	CL284	M3	CL392	K4	CL525	J2	CL1000	H2	CL1660	F3	IC120	*C4	IC824	F5	R218	*N4	R442	*F5	R814	E6	RB109	*B5		
C214	*N4	C435	*G5	C681	*E2	C846	F5	CL157	C4	CL285	M4	CL393	J5	CL526	J1	CL1001	H2	CL1661	F3	IC121	*C5	IC825	D4	R219	M4	R443	F5	R815	*E5	RB110	*C5		
C215	*M4	C437	*G5	C682	*E2	C847	*D5	CL158	C4	CL286	M3	CL394	K4	CL527	J2	CL1002	H2	CL1662	F3	IC122	C5	IC826	J5	R220	K5	R502	*L2	R820	*E5	RB111	*C5		
C216	*M4	C439	*H5	C683	*E2	C848	F5	CL159	C4	CL287	M4	CL395	K4	CL655	F5	CL1003	H2	CL1663	F2	IC123	*B5	IC827	G4	R221	K5	R503	H1	R822	E5	RB112	*B5		
C217	*N4	C440	J5	C684	*E3	C849	D4	CL160	C4	CL288	M4	CL396	K4	CL656	F5	CL1004	H3	CL1664	F2	IC124	C2	IC829	D5	R222	L5	R605	*D4	R823	F5	RB113	B5		
C218	*N4	C500	J3	C685	E1	C850	D5	CL161	C4	CL289	M4	CL397	K4	CL657	F5	CL1005	H3	CL1665	F3	IC125	C4	IC831	E4	R300	*K5	R606	*B4	R824	F5	RB114	*C4		
C219	*M4	C501	K3	C686	*E1	C851	D4	CL162	C5	CL290	N4	CL398	L4	CL658	F5	CL1006	H3	CL1666	F3	IC126	D2	IC832	*F4	R301	*K4	R607	F1	R825	F4	RB115	*C4		
C220	*N3	C502	K3	C687	D3	C852	*E5	CL163	B5	CL291	N4	CL399	L4	CL659	F5	CL1007	H3	CL1667	F3	IC200	*N5	IC833	F4	R302	*K5	R619	*E4	R826	F4	RB116	*C2		
C221	*M3	C503	K3	C688	E2	C853	E5	CL200	M6	CL292	N4	CL400	M3	CL660	F5	CL1008	H1	CL1668	F3	IC201	*M5	IC834	E4	R303	*K5	R620	*E4	R827	F5	RB117	*C2		
C222	*N4	C504	K3	C689	F1	C862	F3	CL201	M5	CL293	N4	CL401	M3	CL661	F5	CL1009	H2	CL1669	E2	IC202	*M5	IC902	G2	R304	K5	R650	*E3	R828	F5	RB118	*D2		
C223	M4	C505	L3	C690	F1	C863	E4	CL202	M5	CL294	N4	CL402	M3	CL662	F5	CL1200	L4	CL1670	E3	IC203	M5	IC903	*G2	R305	*K5	R651	*F2	R829	F4	RB119	*C2		
C224	M4	C506	J2	C700	*C3	C864	E4	CL203	M5	CL295	N4	CL403	M3	CL663	F5	CL1201	L4	CL1671	E3	IC204	*M5	IC904	*H2	R306	*K5	R652	F2	R830	*E5	RB120	*C2		
C225	M4	C507	J3	C701	A3	C865	*F4	CL204	M5	CL296	N3	CL404	M3	CL664	F5	CL1202	L4	CL1672	F3	IC205	M5	IC905	*G2	R307	*K5	R653	F2	R831	K5	RB121	*C4		
C226	*P4	C508	J3	C702	A3	C867	*A5	CL205	M5	CL297	N3	CL405	M3	CL671	F5	CL1203	L3	CL1673	F2	IC206	N4			R308	*K5	R654	F2	R834	K6	RB122	*C4		
C227	*N4	C509	K3	C703	A4	C868	*A5	CL206	M5	CL298	N4	CL406	M3	CL672	F5	CL1204	K3	CL1674	E2	IC208	M4	L100	*B5	R309	K5	R656	*F3	R835	K6	RB123	B4		
C228	*N3	C510	K3	C704	A4	C869	D5	CL207	N5	CL299	N4	CL407	M3	CL673	F5	CL1205	K3	CL1675	E2	IC209	M4	L101	C5	R310	*K5	R657	*F2	R839	*E5	RB200	*N6		
C229	*P3	C511	L3	C705	*A3	C912	G3	CL208	N5	CL305	K5	CL408	M3	CL674	F5	CL1206	K3	CL1676	E3	IC210	M4	L102	*B5	R311	*K5	R658	*F2	R841	E5	RB201	*M6		
C230	M5	C512	L2	C706	*A3	C913	F2	CL209	N5	CL306	K5	CL409	N3	CL679	F6	CL1207	K3	CL1677	F3	IC211	N3	L103	*D5	R312	N1	R659	*F2	R851	E4	RB202	*M6		
C231	*L5	C513	L2	C707	*A3	C914	G1	CL210	N5	CL307	K5	CL410	N3	CL680	F6	CL1208	K3	CL1678	F3	IC212	*K5	L200	N5	R313	N1	R660	*F2	R852	G4	RB203	*M6		
C232	*L5	C514	K3	C708	*A3	C915	G3	CL211	N5	CL309	K5	CL411	M2	CL681	D4	CL1209	K4	CL1679	F2	IC213	*L5	L201	*M5	R314	P1	R661	*E3	R854	K5	RB204	*M6		
C233	*L5	C515	*K2	C709	*A3	C916	*G3	CL212	M4	CL310	P2	CL412	L3	CL682	E4	CL1210	K4	CL1680	F3	IC214	*L5	L202	*M5	R315	P1	R662	*F2	R855	*E4	RB205	*M3		
C234	M5	C516	*K2	C710	*A3	C917	*H2	CL213	M4	CL311	P2	CL413	M2	CL703	A4	CL1211	K3	CL1681	E2	IC217	*M5	L402	H5	R316	P1	R663	*F2	R856	*E4	RB206	*M3		
C235	*M5	C517	*K2	C711	*A3	C918	*G3	CL214	M4	CL312	P2	CL414	M2	CL704	A3	CL1212	K5	CL1682	D2	IC300	K4	L405	G5	R317	N1	R666	*F2	R857	E4	RB213	*K5		
C300	*K4	C518	*J2	C712	*A3	C919	G2	CL215	N4	CL313	P2	CL415	L2	CL705	A4	CL1216	K4	CL1683	D2	IC301	N2	L600	E5	R318	N1	R668	*F2	R858	E4	RB214	*K5		
C301	*K4	C519	J2	C713	C3	C920	G3	CL216	M4	CL314	P2	CL416	L2	CL706	A4	CL1217	K3	CL1684	E2	IC302	*K3	L651	*D1	R319	P1	R670	*D2	R859	E4	RB215	*L5		
C302	*K5	C520	*J2	C714	C3	C921	*H2	CL217	N4	CL315	P2	CL417	L2	CL707	A4	CL1218	L3	CL1685	E2	IC303	J4	L800	A5	R320	P1	R671	*F1	R860	E4	RB216	*L5		
C303	*L4	C521	*K2	C715	B4	C922	*G3	CL218	N4	CL316	P3	CL418	L3	CL709	A4	CL1219	K4	CL1686	F2	IC307	*N1	L801	A5	R321	P1	R672	D1	R861	E4	RB217	*L5		
C304	K5	C522	J3	C716	B4	C923	*H3	CL219	N4	CL317	P3	CL419	L3	CL710	A4	CL1220	K4	CL1687	F2	IC308	*N2	L802	A5	R322	P3	R673	E1	R862	*E4	RB218	*L5		
C305	P2	C523	J2	C717	*C3	C924	*H3	CL220	N4	CL318	P3	CL420	L3	CL711	A4	CL1221	K5	CL1688	F2	IC309	*N2	L803	A6	R323	P3	R674	E1	R863	*C6	RB300	J4		
C306	*P3	C524	J2	C718	*C3	C925	*G2	CL221	N4	CL319	P3	CL421	L3	CL720	A3	CL1222	K3	CL1689	F2	IC310	*H4	L804	*E5	R324	N3	R675	E1	R864	*A5	RB400	*G5		
C307	P2	C525	J2	C719	*B3	C926	*H2	CL222	N4	CL320	P3	CL422	L3	CL721	C3	CL1223	K3	CL1690	E2	IC311	*H4	L806	*C6	R325	N3	R715	A4	R865	*A5	RB401	*G5		
C308	*P1	C526	K3	C720	*B3	C927	*G3	CL223	N4	CL321	M2	CL423	L3	CL723	B4	CL1224	K3	CL2200	N4	IC312	*L4	L807	F5	R326	N3	R716	A4	R866	*B5	RB402	*G5		
C309	*N1	C527	*L2	C721	*B3	C928	*G2	CL224	N4	CL322	M3	CL424	L2	CL724	C3	CL1600	F2	CL2201	M3	IC400	M2	L808	*D4	R327	N3	R717	A4	R867	*A4	RB403	*G5		
C310	*N2	C528	*L2	C722	*B3	C929	*G2	CL225	N3	CL323	N3	CL425	L2	CL725	A2	CL1601	F2	CL2202	M3	IC401	*K5			R328	N3	R718	A4	R868	K5	RB404	*G5		
C311	*N2	C529	*K2	C723	*B3	C930	G2	CL226	N4	CL324	P3	CL426	L2	CL726	A2	CL1602	F2	CL2203	K5	IC402	*J5	Q200	L5	R329	N3	R719	A4	R903	G3	RB500	*J2		
C312	*N3	C530	*J2	C724	*B3	C931	*G2	CL227	N4	CL325	M1	CL427	L2	CL730	A2	CL1603	F2	CL2204	K5	IC404	*H5	Q400	F5	R330	N3	R720	A4	R904	G3	RB501	K1		
C313	*N3	C531	*J2	C725	A2	C932	G3	CL228	N4	CL326	P3	CL428	L2	CL731	A2	CL1604	F2	CL2205	M6	IC406	*J5	Q800	*C6	R331	P3	R721	A4	R905	G1	RB502	K2		
C314	N1	C532	*J2	C726	A2	C933	*G3	CL229	N4	CL327	M1	CL429	L2	CL732	C2	CL1605	F2	CL2206	M6	IC407	H4	Q801	A5	R332	P3	R722	A4	R906	H1	RB503	K1		
C315	*K3	C533	K2	C727	A2	C934	*G2	CL230	N4	CL328	M1	CL430	L2	CL733	B2	CL1606	F2	CL2207	M6	IC408	*F5	Q802	*A5	R333	P3	R723	A4	R907	G1	RB504	L2		
C316	J3	C534	K1	C728	A2	C935	*G2	CL231	N4	CL329	M2	CL431	L2	CL737	B2	CL1607	F2	CL2208	M6	IC410	*G5			R334	N1	R724	A4	R908	G1	RB505	L2		
C320	*N1	C535	K1	C729	*A2	C936	*H2	CL232	N4	CL330	M2	CL432	H5	CL738	C2	CL1608	F2	CL2209	M6	IC412	*G5	R100	N5	R335	N1	R725	A4	R909	H1	RB506	L2		
C321	*N2	C536	K1	C730	*A2	C937	*G3	CL233	N4	CL331	M2	CL433	H4	CL739	B4	CL1609	F2	CL2210	L6	IC413	J5	R101	N5	R338	*L4	R726	A4	R911	H2	RB507	L1		
C322	*N1	C537	L1	C731	*A1	C938	*H2	CL234	N4	CL332	M2	CL434	J4	CL740	A2	CL1610	F2	CL2211	M6	IC500	K2	R102	P5	R348	P2	R727	A4	R912	*G3	RB508	M1		
C323	*N3	C538	K1	C732	*A1	C939	*H3	CL235	N4	CL333	M2	CL435	J4	CL741	B2	CL1611	F2	CL2212	L6	IC501	J2	R103	*C5	R349	*K4	R728	A4	R913	*G2	RB509	L1		
C324	*P2	C539	L1	C733	*A2			CL236	N4	CL334	M1	CL436	H4	CL800	G4	CL1612	F2	CL2213	M6	IC502	J2	R105	*C5	R350	*K4	R729	A4	R914	*G2	RB510	M2		
C325	*N2	C540	L1	C734	*A2	CL100	N6	CL237	M3	CL335	M1	CL437	H4	CL802	F4	CL1613	F2	CL2214	M6	IC503	*L2	R106	N5	R351	*K4	R738	A3	R915	*H2	RB511	M1		
C326	*P2	C541	L2	C735	*A1	CL101	N6	CL238	N3	CL336	M1	CL438	H4	CL819	F4	CL1614	F2			IC504	*K2	R107	N5	R352	*K4	R739	A3	R1004	A2	RB512	M1		
C327	*N2	C542	L1	C736	*A2	CL102	N6	CL239	N4	CL337	M2	CL439	H4	CL835	E5	CL1615	F2	CN13	L6	IC505	*J2	R108	C5	R353	*L4	R740	A3	R1005	A1	RB513	J1		
C328	P2	C543	M1	C737	C2	CL103	M6	CL240	N3	CL338	M2	CL440	H4	CL836	E5	CL1616	F2	CN14	G6	IC506	*K1	R109	C5	R354	*L5	R748	B4	R1006	A2	RB514	K2		
C329	*H4	C544	M1	C738	C2	CL104	M6	CL241	N3	CL339	M1	CL441	H4	CL837	E5	CL1617	F3	CN15	C6	IC507	*L1	R110	B5	R355	*L5	R749	B4	R1014	B2	RB515	J1		
C330	*H4	C545	M1	C739	B2	CL105	M6	CL242	M3	CL340	M2	CL442	H4	CL839	E4	CL1618	F2	CN16	D1	IC508	*L1	R111	B5	R356	*M4	R750	B4	R1015	B3	RB516	H2		

DPR-229
SUFFIX: -11

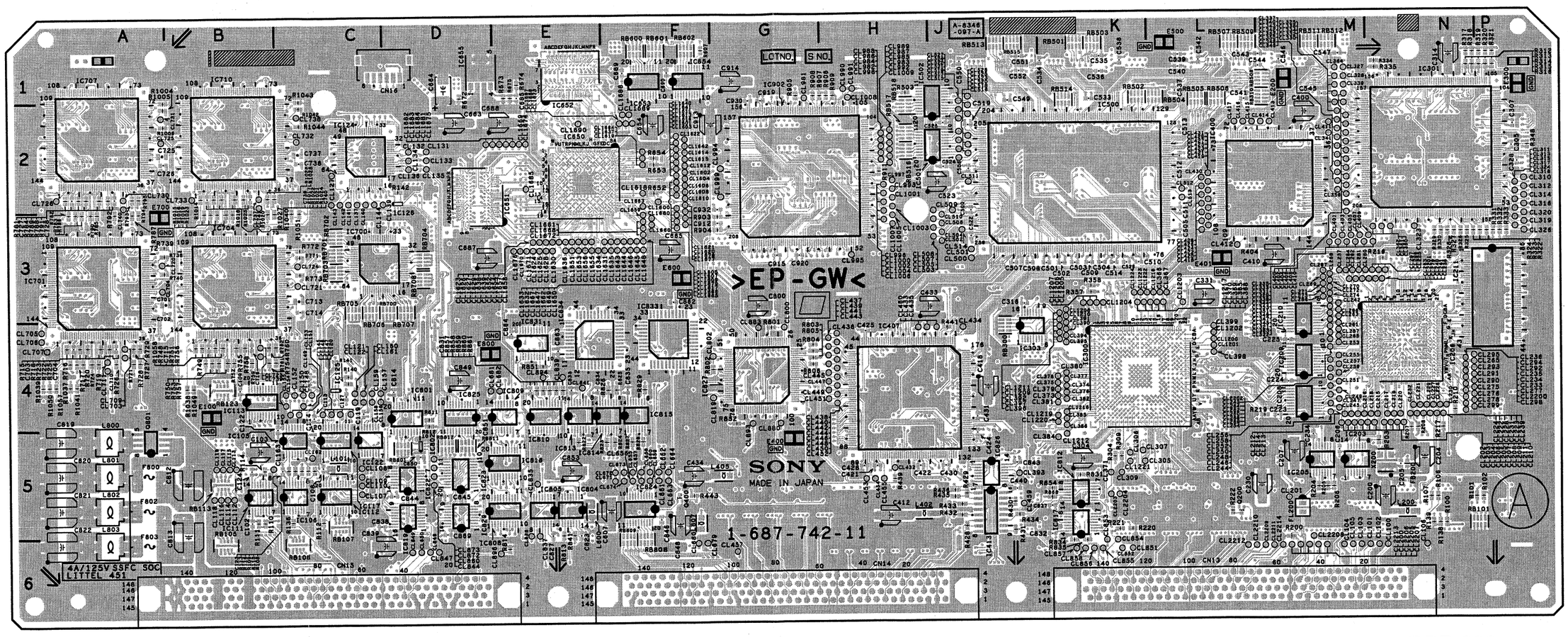

Components locations list; previous page

DPR-229 -A SIDE-
SUFFIX: -11

4-30 (a)

DPR-229
SUFFIX: -11

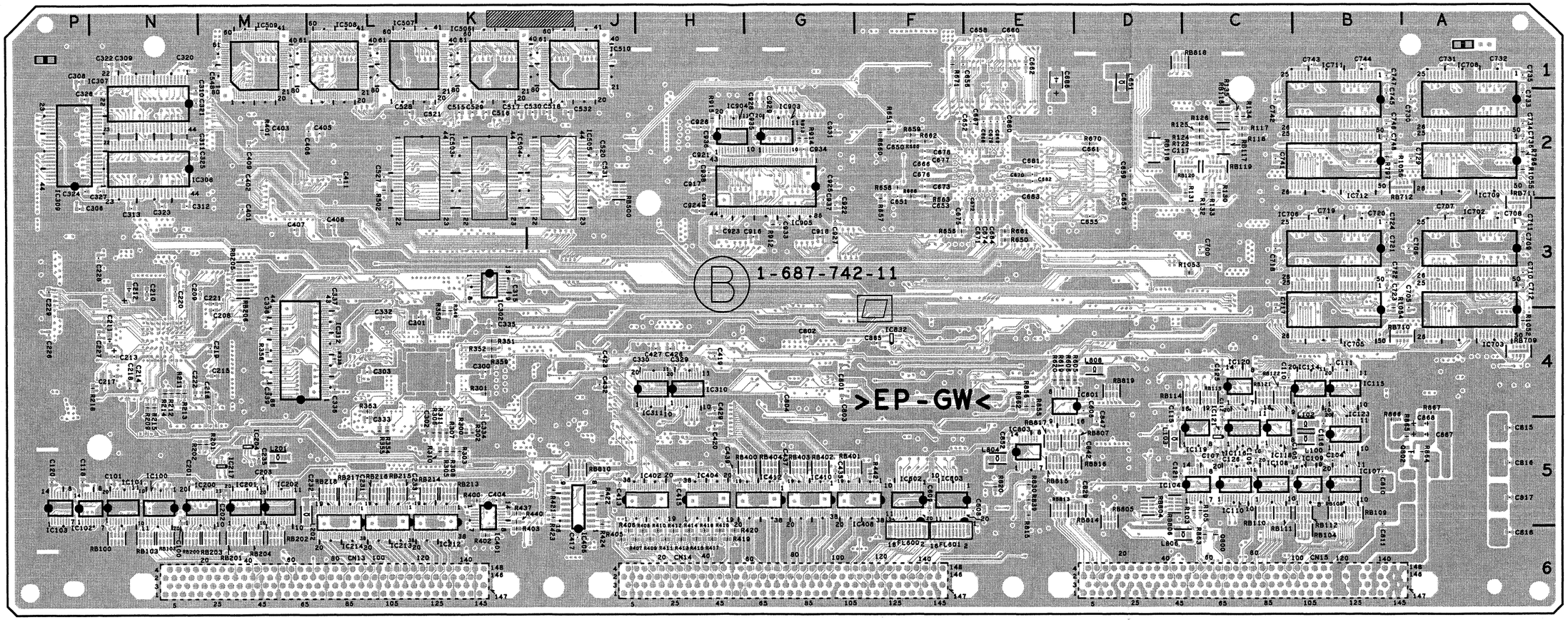

DPR-229 -B SIDE-
SUFFIX: -11

4-31 (a)

DR-414 (1-677-281-13)

C100	*E2	C515	*B3	C759	*F5	D224	*E3	IC703	E2	Q706	*E2
C101	*E2	C516	A3	C760	*F5	D225	*F3	IC704	C2	Q708	*E4
C102	*E2	C517	*B2	C762	*E4	D226	*F3	IC705	D2	Q709	*E2
C103	*E2	C518	*B4	C763	E4	D227	*E3	IC706	D2	Q711	*F2
C104	*E2	C519	*F4	C764	E5	D228	*E3	IC707	F5	Q712	*F2
C105	*E2	C520	A5	C800	*B3	D229	*F3	IC708	F5	Q713	*F2
C106	*E2	C521	C5	C803	*B3	D230	*F3	IC800	B4	Q714	*F2
C107	*E2	C522	C5	C804	*B3	D231	*E3	IC801	B4	Q715	*F1
C108	*E2	C600	*F2	C805	*A4	D300	D3	IC802	D4	Q716	*F2
C109	*F3	C601	*A3	C806	*B3	D302	*C3	IC804	*B3	Q717	*F2
C110	*F2	C602	*A3	C807	*B3	D303	*E3	IC805	C3	Q718	*E2
C111	*F2	C603	*A3	C808	*B4	D304	D3	IC1000	E3	Q719	*A1
C112	*F2	C604	*A3	C809	*B3	D401	A3	IC1001	E3	Q720	*A1
C113	*E2	C605	*F2	C810	*C3	D402	*C2	IC1002	D4	Q721	*A1
C114	*F2	C606	*A3	C811	*B3	D500	B3	IC1004	*E3	Q722	*A1
C115	*E2	C607	*F2	C812	C3	D501	B2			Q723	*A1
C116	*E2	C608	*A2	C813	*B3	D502	F3	L300	D3	Q724	*A1
C117	*F2	C609	*F2	C816	*D3	D503	B4	L400	B3	Q725	*E4
C118	*C1	C610	*A2	C817	C4	D504	B2	L500	B3	Q726	*E4
C119	*A4	C611	F2	C818	C3	D505	F3	L600	A3	Q800	*B4
C120	*F2	C612	A2	C819	C4	D506	B4	L601	A3	Q801	*B3
C200	*A3	C613	A2	C820	*D4	D507	A5	L700	E2	Q802	*C3
C201	*A3	C614	*A2	C823	*D3	D508	C5	L701	D1	Q803	*C3
C202	*A3	C615	*A2	C824	*D3	D509	C5	L702	D1	Q804	*C3
C203	*C4	C616	*A2	C1000	*E3	D511	A5	L703	D1	Q805	*C4
C204	*D4	C618	A2	C1001	*C4	D512	A5	L704	D2	Q806	*C4
C205	*F3	C620	A2	C1002	*C3	D513	A5	L705	C1	Q807	*C4
C206	*B4	C621	*A2	C1003	*E3	D601	*B2	L706	E1	Q808	*C3
C207	*F2	C622	*A2	C1004	*E3	D700	E2	L707	F2	Q809	*C3
C208	*F2	C623	*B2	C1005	*E3	D701	E2	L708	F2	Q810	*C3
C209	*A4	C624	*B2	C1006	*E3	D702	F1	L709	F2	Q811	*C3
C210	*A2	C626	*B2	C1007	*E3	D703	*E4	L710	E1	Q812	*C3
C211	*A2	C627	*B2	C1008	*E3	D800	*B3	L711	E4	Q813	*C3
C212	*F2	C628	*A2	C1009	*E3	D1000	*E3	L800	B3	Q1000	*E3
C213	*F6	C629	A1	C1010	*E3			L801	C3	Q1001	*E3
C214	*F2	C630	*B2	C1011	*E3	E400	C2	L1000	E3	Q1002	*E3
C215	*A4	C631	*B2	C1012	E3			L1001	D3	Q1003	*E3
C216	*E3	C632	A1	C1013	*E3	F400	A3			Q1004	*E4
C217	*F3	C633	*C2	C1016	*D4	F500	A3	PH200	F4	Q1005	*E3
C218	*F3	C634	*C2	C1017	D4	F700	E2	PH201	F5	Q1006	*D3
C219	*E3	C635	*B2	C1018	E3	F701	D1	PH202	A4	Q1007	*D3
C300	*C2	C700	E2	C1019	D3	F702	D1	PH203	C6	Q1008	*D3
C301	*C2	C701	*D2	C1020	*D4	F703	D1	PH204	B6	Q1009	*D3
C302	*D2	C702	D2	C1023	*D4	F704	D1			Q1010	*D3
C304	*D2	C703	*D2	C1024	*D4	F705	C1	Q100	*F3	Q1011	*D4
C305	*D2	C704	C3			F706	E4	Q101	*F2	Q1012	*D3
C306	D3	C705	E1	CL700	F1	F800	C3	Q102	*F2	Q1013	*D3
C308	*D3	C706	E1	CL701	F2	F1000	E3	Q103	*D1		
C309	E3	C707	E2					Q200	*A2	R100	*E2
C310	E3	C708	E2	CN61	E1	IC1	E2	Q201	*A2	R101	*E2
C312	*D2	C709	*D2	CN62	C1	IC2	C1	Q204	*A2	R102	*E2
C313	*D2	C710	*D2	CN65	B2	IC3	E2	Q205	*A2	R103	*E2
C314	*D3	C711	*D2	CN200	A2	IC4	A4	Q300	*D3	R104	*E2
C315	*D3	C712	*D2	CN201	F1	IC100	F2	Q301	*E3	R105	*E2
C316	C3	C713	*D2	CN202	C3	IC101	E2	Q302	*D3	R106	*E2
C317	*C3	C714	B2	CN203	A3	IC102	F2	Q303	*D2	R107	*E2
C318	*C3	C715	E2	CN204	C4	IC103	F2	Q304	*D3	R108	*F2
C319	*C2	C716	*D2	CN205	D4	IC104	F3	Q305	*D3	R109	*F2
C320	*C2	C717	*D2	CN206	A3	IC200	F3	Q306	*D3	R110	*E2
C321	*C3	C719	*E2	CN207	F2	IC201	F6	Q307	*D3	R111	*F2
C324	C2	C720	E3	CN208	F3	IC202	F2	Q308	*D3	R112	*F2
C327	C3	C721	E3	CN210	B4	IC203	F3	Q309	*D3	R113	*F2
C328	*C3	C722	D2	CN212	A3	IC204	F3	Q310	*D3	R200	*F4
C330	C3	C723	D2	CN213	F2	IC205	F3	Q311	*D3	R201	*F4
C331	*D2	C724	*D2	CN214	A3	IC206	F3	Q312	*D3	R202	*F4
C400	*C2	C725	*D2	CN215	F2	IC207	A4	Q313	*C3	R203	*B4
C401	*C2	C726	*D2	CN216	A4	IC300	*C2	Q314	*D2	R204	*B4
C402	*C2	C727	*E2			IC301	D2	Q315	*D2	R205	*A3
C403	*C2	C728	*D2	D200	*F3	IC302	D2	Q316	*D2	R206	*C4
C404	*D2	C729	E2	D201	*F3	IC303	C3	Q317	*D3	R207	*C4
C405	B3	C730	D2	D202	*F3	IC304	D2	Q318	*C3	R208	*C4
C406	*B3	C731	*E2	D203	*F3	IC305	D2	Q319	*D2	R209	*C4
C407	B3	C733	*D2	D204	*F3	IC401	C2	Q323	*D2	R210	*A4
C408	*A3	C736	E2	D205	*F3	IC402	F5	Q400	*B3	R211	*C6
C409	*A3	C739	*F2	D206	*F3	IC410	A3	Q401	*B3	R212	*F2
C410	*A3	C740	*F2	D207	*F3	IC500	A3	Q426	*B3	R213	*F2
C412	*A3	C741	F1	D208	*F3	IC501	A4	Q500	*B3	R214	*F2
C414	*C2	C742	E2	D209	*F3	IC502	F4	Q501	*B3	R215	*F2
C415	*C2	C743	*F2	D210	*F3	IC503	F5	Q502	*B3	R216	*F2
C416	C2	C744	*F2	D211	*F3	IC504	A4	Q503	A5	R217	*F2
C500	*A4	C745	F2	D212	*F3	IC600	F2	Q504	A5	R218	*F2
C502	*F5	C746	F2	D213	*F3	IC601	A3	Q505	C5	R219	*F6
C504	*F5	C747	*D2	D214	*F3	IC602	A2	Q506	C5	R220	*F2
C505	*F5	C750	*F5	D215	*F3	IC603	B2	Q603	*B1	R221	*F6
C506	B3	C751	F5	D216	*E3	IC604	A1	Q604	*B1	R222	F3
C507	*F5	C752	*F5	D217	*F3	IC605	A2	Q605	*B1	R223	*F6
C508	*F5	C753	*E5	D218	*F3	IC606	A2	Q700	*D2	R224	F3
C509	*A4	C754	*F5	D219	*E3	IC607	A2	Q701	*D2	R225	*F6
C510	*B2	C755	*F5	D220	*E3	IC609	B2	Q702	*F5	R226	F3
C512	A4	C756	*F5	D221	*F3	IC610	B2	Q703	*E2	R227	*F6
C513	B4	C757	*F5	D222	*F3	IC700	D2	Q704	*E2	R228	F3
C514	F4	C758	*F5	D223	*E3	IC701	D2	Q705	*F5	R229	*F6

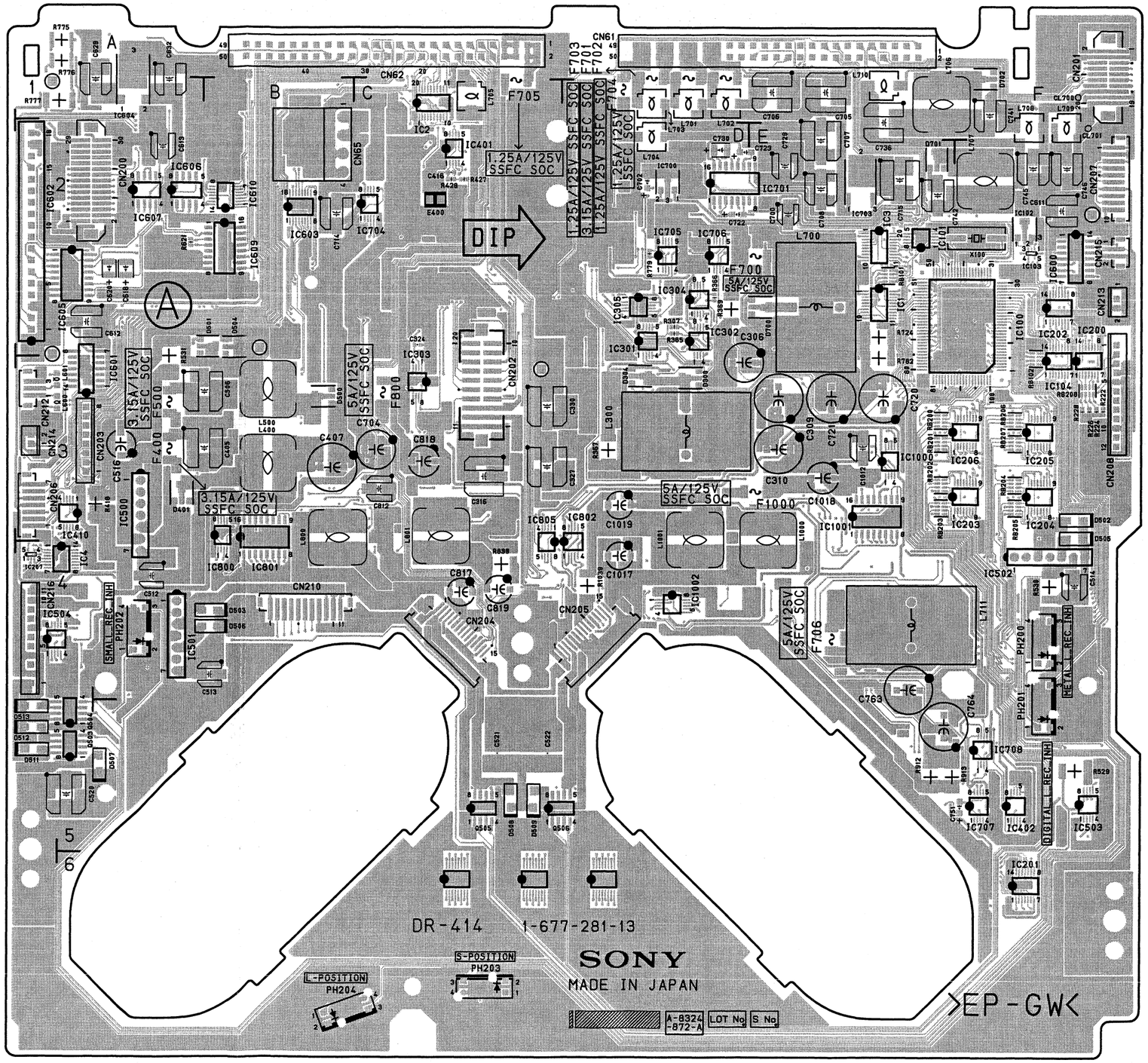

DR-414 -A SIDE-
SUFFIX: -13

HDW series, DVW series, MSW series

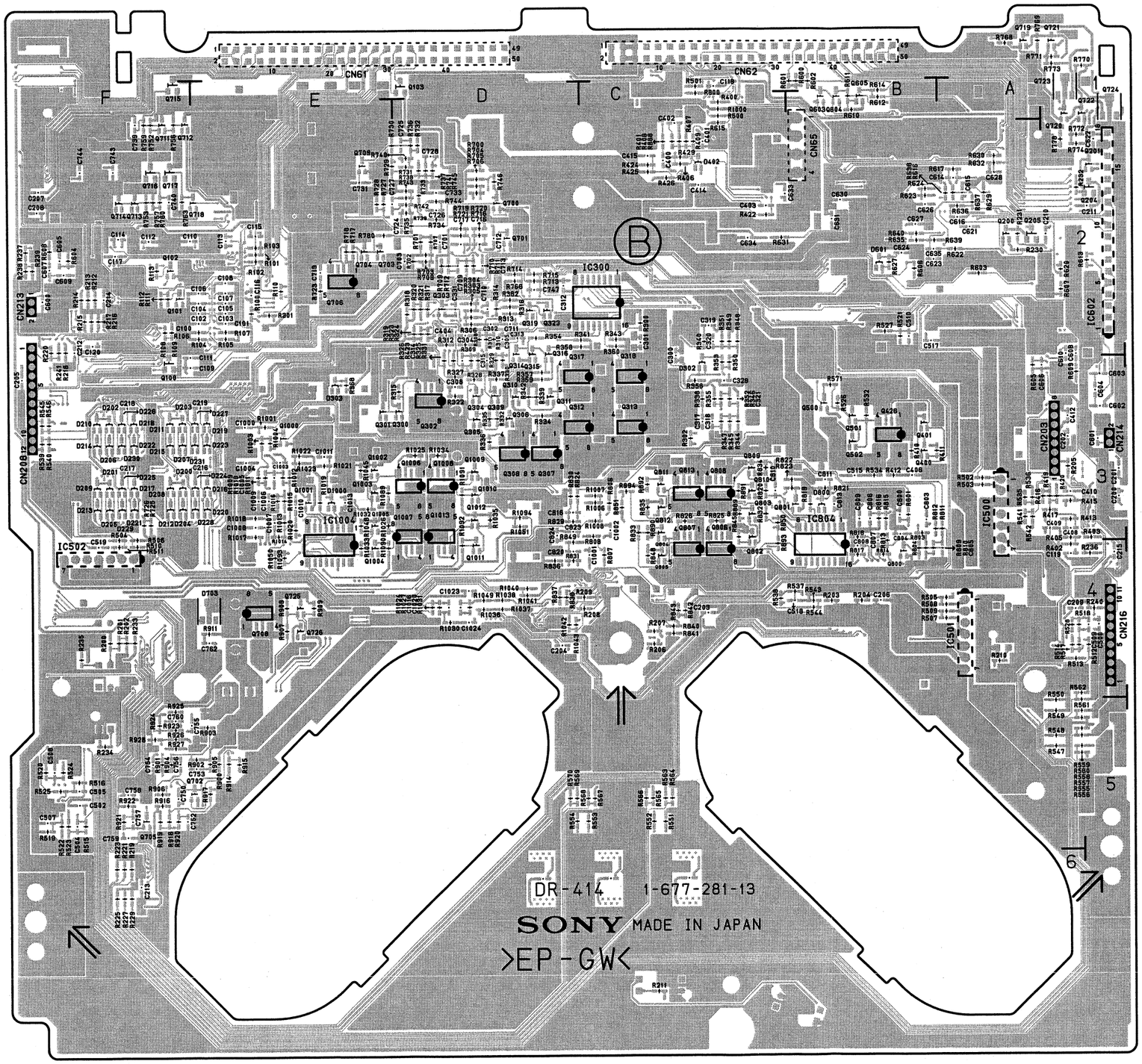

DR-414 -B SIDE-
SUFFIX: -13

R230	*A2	R416	*A3	R608	*F2	R780	*E2	R1012	*E3		
R231	*A2	R417	*A3	R609	*A3	R782	E3	R1013	*E3		
R232	*A2	R418	A3	R610	*B1	R800	*C1	R1014	*E3		
R233	*F4	R419	*A3	R611	*B1	R801	*B3	R1015	*E3		
R234	*F5	R420	*A3	R612	*B1	R803	*B3	R1016	*E3		
R235	*F4	R422	*C2	R613	*A2	R804	*B4	R1017	*E3		
R236	*A4	R423	*D3	R614	*B1	R806	*C3	R1018	*E3		
R237	*F2	R424	*C2	R615	*C2	R807	*C4	R1019	*E3		
R238	*F2	R425	*C2	R616	*A2	R808	*C3	R1020	*E3		
R239	*F2	R426	*C2	R617	*A2	R809	*B4	R1021	*E3		
R240	*A4	R427	C2	R620	*A2	R810	*B4	R1022	*E3		
R241	*F2	R428	C2	R621	A2	R811	*A3	R1023	*E3		
R300	*C2	R429	*C2	R622	*A2	R812	*B3	R1024	*D4		
R301	*E2	R500	*C1	R623	*B2	R813	*B3	R1025	*D3		
R302	*C3	R501	*C1	R624	*B2	R814	*B4	R1026	*E3		
R303	*D2	R502	*A3	R627	*B2	R815	*B3	R1027	*D4		
R304	*D2	R503	*A3	R629	*A2	R816	*B3	R1030	*D4		
R305	*D2	R504	*F3	R630	*A2	R817	*B4	R1031	*D4		
R306	*D2	R505	*A4	R631	*C2	R818	*B3	R1032	*E3		
R307	D2	R506	*F3	R632	*A2	R819	*B3	R1033	*E4		
R308	*D2	R507	*A4	R635	*B2	R820	*C3	R1034	*D3		
R309	*D2	R508	*A4	R636	*A2	R821	*B3	R1035	*D3		
R310	*D2	R509	*A4	R637	*A2	R822	*B3	R1036	*D4		
R311	*D2	R510	*F4	R638	*A2	R823	*B3	R1037	*D4		
R312	*D2	R511	*F4	R639	*B2	R824	*D3	R1038	*D4		
R313	*D2	R512	*A4	R640	*B2	R825	*C3	R1039	D4		
R314	*D2	R513	*A4	R700	*D2	R826	*C3	R1040	*D4		
R315	*D3	R514	*A4	R701	*D2	R829	*D3	R1041	*D4		
R316	*D2	R515	*F5	R702	*D2	R830	*D3	R1042	*D4		
R317	*D2	R516	*F5	R703	*D2	R831	*D4	R1043	*D4		
R318	*D2	R517	*A4	R704	*D2	R832	*C3	R1045	*E3		
R319	*D2	R518	*A4	R705	*D2	R833	*C3	R1048	*E3		
R320	*D2	R519	*F5	R706	*D2	R834	*C3	R1049	*D4		
R321	*D2	R520	*F5	R707	*D2	R835	*C3	R1050	*E4		
R322	*D3	R521	*B2	R708	*D2	R836	*D4	R1051	*D3		
R323	*D2	R522	*F5	R709	*D2	R837	*D4	R1089	*E3		
R324	*D2	R523	*F5	R710	*D2	R838	*D4	R1090	*E4		
R325	*D3	R524	*F5	R711	*D2	R839	C4	R1091	*D3		
R326	*D3	R525	*F5	R712	*D2	R840	*C4	R1092	*D4		
R327	*D3	R526	*B3	R713	*D2	R841	*C4	R1093	*E4		
R328	*D3	R527	*B2	R714	*D2	R842	*C4	R1094	*D3		
R329	*D3	R528	*A4	R715	*D2	R843	*C4				
R330	*D3	R529	F5	R716	*D2	R845	*C3	RB101	E2		
R331	*D3	R530	F4	R717	*E2	R848	*C4	RB102	F3		
R332	*D3	R531	A2	R718	*E2	R849	*D3	RB200	E3		
R334	*D3	R532	*B3	R719	*D2	R850	*C3	RB201	E3		
R335	*D3	R534	*B3	R720	*D2	R851	*C3	RB202	E3		
R336	*D3	R535	*A3	R721	*D2	R888	*C2	RB203	E3		
R337	*D3	R536	*A3	R723	*E2	R889	*C3	RB204	F3		
R338	*C3	R537	*B4	R724	E2	R890	*C3	RB205	F3		
R339	*D3	R538	*C4	R725	*F3	R891	*C3	RB206	F3		
R340	*C2	R539	*F3	R726	*F3	R892	*C3	RB207	F3		
R341	*C2	R540	*F3	R727	*E2	R893	*C4	RB208	F3		
R342	*D3	R541	*A3	R728	*E2	R894	*C3				
R343	*C2	R542	*A3	R729	*E2	R900	*E5	X100	F2		
R344	*C3	R543	*B4	R730	*E2	R901	*F5				
R345	*C3	R544	*B4	R731	*D2	R902	*E5	*:B SIDE			
R346	*C3	R545	*F3	R732	*D2	R903	*E5				
R347	*C3	R546	*F3	R733	*D2	R904	*F5				
R348	*C2	R547	*A5	R734	*D2	R905	*E5				
R349	*C2	R548	*A5	R735	*D2	R906	*F5				
R350	*C3	R549	*A5	R736	*D2	R907	*E4				
R351	*C2	R550	*A5	R737	*D2	R908	*E4				
R352	*C3	R551	*C5	R738	*D2	R909	*E4				
R353	*C3	R552	*C5	R739	*D2	R911	*E4				
R354	*D2	R553	*C5	R740	*D2	R912	E5				
R355	*C3	R554	*D5	R741	*D2	R913	E5				
R356	*C3	R555	*A5	R742	*D2	R914	*E5				
R357	*D3	R556	*A5	R743	*D2	R915	*E5				
R358	*C2	R557	*A5	R744	*D2	R916	*F5				
R359	*D3	R558	*A5	R745	*D2	R917	*E5				
R360	*C2	R559	*A5	R746	*D2	R918	*F5				
R362	*D2	R560	*A5	R752	*F2	R919	*F5				
R365	D2	R561	*A5	R753	*F2	R920	*F5				
R366	D2	R562	*A4	R756	*F2	R921	*F5				
R367	D3	R563	*C5	R757	*F2	R922	*F5				
R368	*E3	R564	*C5	R759	*F2	R923	*F5				
R369	D2	R565	*C5	R760	*F2	R924	*F5				
R400	*C1	R566	*C5	R763	*F2	R925	*F5				
R401	*C2	R567	*C5	R766	*D2	R926	*F5				
R402	*A4	R568	*C5	R768	*A1	R927	*F5				
R403	*A3	R569	*D5	R769	*A1	R928	*F5				
R405	*A3	R570	*D5	R770	*A1	R1000	*C1				
R406	*C2	R571	*B3	R771	*A1	R1001	*E3				
R407	*C2	R600	*B1	R772	*A2	R1003	*E3				
R408	*C2	R601	*B1	R773	*A1	R1004	*E3				
R409	*C2	R602	*B1	R774	*A2	R1006	*C3				
R410	*B3	R603	*A2	R775	A1	R1007	*C3				
R411	*B3	R604	*F2	R776	A1	R1008	*C3				
R412	*B3	R605	*A3	R777	A1	R1009	*E3				
R413	*A3	R606	*B2	R778	*A2	R1010	*E3				
R415	*A3	R607	*A2	R779	D2	R1011	*E3				

DR-508 (1-689-488-12)

A2	A1	C506	B3	C736	E2	CN207	F2	IC604	A1	Q426	*B3
A3	A3	C507	*F5	C739	*F2	CN208	F3	IC605	A2	Q500	B2
A4	B2	C508	*F5	C740	*F2	CN210	B4	IC606	A2	Q501	*B3
A5	C3	C509	*A4	C741	F1	CN212	A2	IC607	A2	Q502	*B3
A6	F2	C510	*A4	C742	E2	CN213	F2	IC608	A2	Q503	A5
		C512	A4	C743	*F2	CN214	A3	IC609	A2	Q504	A5
C100	*E2	C513	B4	C744	*F2	CN215	F2	IC610	B2	Q505	C5
C101	*E2	C514	F4	C745	F2	CN216	A4	IC611	A2	Q506	C5
C102	*E2	C515	*B3	C746	F2			IC612	A2	Q603	B1
C103	*E2	C516	A3	C747	*D2	D200	*F3	IC613	F2	Q604	B1
C104	*E2	C517	*A2	C750	*F5	D201	*F3	IC614	*A3	Q605	*B1
C105	*E2	C518	*B4	C751	F5	D202	*F3	IC615	A2	Q606	A2
C106	*E2	C519	*F3	C752	*F5	D203	*F3	IC700	D2	Q607	A2
C107	*E2	C520	A5	C753	*E5	D204	*F3	IC701	D2	Q608	A2
C108	*E2	C521	C5	C755	*F5	D205	*F3	IC703	E2	Q609	A2
C109	*F2	C522	C5	C756	*F5	D206	*F3	IC705	D2	Q700	D2
C110	*F2	C600	*F2	C757	*F5	D207	*F3	IC706	D2	Q701	D2
C111	*F2	C601	*A3	C758	*F5	D302	*C2	IC707	F5	Q702	E5
C112	*F2	C602	*A2	C759	*F5	D303	*E3	IC708	F5	Q703	*E2
C113	*E2	C603	*A2	C760	*F5	D305	*D3	IC709	F5	Q704	*E2
C114	F2	C604	*A2	C762	*E4	D306	*D3	IC800	B4	Q705	F5
C115	*E2	C605	*F2	C765	C2	D401	A3	IC801	B4	Q706	*E2
C116	*E2	C606	*A2	C766	C2	D402	*C2	IC802	D4	Q707	D2
C117	F2	C607	*F2	C768	E4	D500	B3	IC804	*B3	Q708	*E4
C118	*C1	C608	*A3	C769	E5	D501	A2	IC805	C3	Q709	E2
C119	*A4	C609	*F2	C770	*D2	D502	F3	IC1000	E3	Q710	*E2
C120	*F3	C610	*A3	C771	*F5	D503	B4	IC1001	E3	Q711	*F2
C121	*F2	C611	F2	C772	D2	D504	B2	IC1002	D4	Q712	*F2
C122	F2	C612	A2	C800	*B3	D505	F3	IC1004	*E3	Q713	*F2
C200	*A3	C614	A2	C803	*B3	D506	B4			Q714	*F2
C201	*A3	C616	A2	C804	*B3	D507	A5	L300	D3	Q715	*E1
C202	*A3	C621	A2	C805	*A4	D508	C5	L400	B3	Q716	*F2
C203	*C4	C623	*A2	C806	*B3	D509	C5	L500	B2	Q717	*F2
C204	*D4	C624	*B2	C807	*B3	D511	A5	L600	A2	Q718	E2
C205	*F3	C626	*B2	C808	*B4	D512	A5	L601	A2	Q719	*A1
C206	*B4	C627	A2	C809	*B3	D513	A5	L700	E2	Q720	*A1
C207	*F2	C629	A1	C810	*C3	D514	B3	L702	D1	Q721	*A1
C208	*F2	C632	A1	C811	*B3	D601	*B2	L703	D1	Q722	*A1
C209	A4	C635	*A2	C812	C3	D602	*A2	L704	D2	Q723	*A1
C210	*A2	C636	*A2	C813	*B3	D700	E2	L705	C1	Q724	*A2
C211	*A2	C637	A2	C816	*D3	D701	E2	L706	E1	Q725	*E4
C212	*F2	C638	A2	C817	C4	D702	F1	L707	F2	Q726	*E4
C213	*F6	C639	A2	C818	C3	D703	*E4	L708	F2	Q727	*E1
C214	*F2	C641	*A2	C819	C3	D800	*B3	L709	F2	Q800	B4
C215	A4	C642	A2	C820	*D4	D1000	*E3	L710	E1	Q801	C3
C216	*E3	C643	*A2	C823	*D3			L711	E4	Q802	*C3
C217	*F3	C644	*A2	C824	*D3	F1	D2	L712	D1	Q803	*C3
C218	*F3	C645	*A2	C1000	*E3	F400	A3	L800	B3	Q804	*C3
C219	*E3	C646	*A1	C1001	*C4	F500	A3	L801	C3	Q805	*C4
C300	*C2	C647	A2	C1002	*C3	F700	D2	L1000	E3	Q806	*C4
C301	*C2	C648	A2	C1003	*E3	F701	D1	L1001	D3	Q807	*C4
C302	*D2	C649	*A2	C1004	*E3	F702	D1			Q808	*C3
C304	*D2	C650	A2	C1005	*E3	F703	D1	PH200	F4	Q809	*C3
C305	*D2	C651	A2	C1006	*E3	F704	D1	PH201	F4	Q810	*C3
C308	*D3	C652	*A2	C1007	*E3	F705	C1	PH202	A4	Q811	*C3
C310	E3	C653	*A2	C1008	*E3	F706	E4	PH203	C6	Q812	*C3
C312	*D2	C654	*A2	C1009	*E3	F800	C3	PH204	B6	Q813	*C3
C313	*D2	C655	*A2	C1010	*E3	F1000	E3			Q1000	E3
C314	*D2	C656	*A2	C1011	*E3			Q100	*F2	Q1001	E3
C315	*D2	C657	A2	C1012	E3	IC1	E2	Q101	F2	Q1002	*E3
C316	C3	C658	*A2	C1013	*E3	IC2	C1	Q200	F4	Q1003	*E3
C317	*C3	C659	*A2	C1016	*D4	IC3	E2	Q201	F5	Q1004	*E4
C318	*C3	C700	E2	C1017	D4	IC4	A4	Q202	A4	Q1005	*E3
C319	*C2	C701	*D2	C1018	E3	IC100	F2	Q203	C6	Q1006	*D3
C320	*C2	C702	D2	C1019	D3	IC101	E2	Q204	B6	Q1007	*D3
C321	*C3	C703	*D2	C1020	*D4	IC103	F2	Q205	A2	Q1008	*D3
C324	C2	C705	E1	C1023	*D4	IC104	F3	Q206	A2	Q1009	*D3
C327	C3	C706	E1	C1024	*D4	IC105	F2	Q207	*A2	Q1010	*D3
C328	*C3	C707	E2	C1025	C2	IC106	F2	Q208	*A2	Q1011	*D4
C330	C3	C708	E2	C1026	C2	IC107	F2	Q300	E3	Q1012	*D3
C331	*D2	C709	*D2			IC200	F2	Q301	E3	Q1013	*D3
C332	D3	C710	*D2	CL100	*F2	IC201	F2	Q302	*E3		
C333	D3	C711	*D2	CL300	*E2	IC202	F6	Q303	D2	R100	*E2
C400	*C2	C712	*D2	CL301	*E2	IC205	A4	Q304	D3	R101	*E2
C401	C2	C713	*D2	CL600	*A2	IC207	F3	Q305	*D3	R102	*E2
C402	*C2	C714	B2	CL601	*A2	IC208	F3	Q306	*D3	R103	*E2
C403	*C2	C715	E2	CL602	*A2	IC209	F3	Q307	*D3	R104	*E2
C404	*C2	C716	*D2	CL603	*F2	IC210	F3	Q308	*D3	R105	*E2
C405	*C2	C719	*E2	CL604	*A3	IC300	*C2	Q309	D3	R106	*E2
C406	*C2	C720	E3	CL700	*F1	IC301	D2	Q310	*D3	R107	*E2
C407	*D2	C721	E3	CL701	*F1	IC302	D2	Q311	*D3	R108	*F2
C408	B3	C722	D2			IC303	C3	Q312	*D3	R109	*F2
C409	*B3	C723	D2	CN61	E1	IC304	D2	Q313	*C3	R110	*E2
C410	B3	C724	*D2	CN62	C1	IC305	D2	Q314	D2	R111	F2
C412	*A3	C725	*D2	CN65	B2	IC401	C2	Q315	*D2	R112	F2
C413	A3	C726	*D2	CN200	A2	IC410	A3	Q316	*D2	R113	*F3
C414	*A3	C727	*E2	CN201	F1	IC411	C2	Q317	*D3	R114	*F2
C415	*A3	C728	*D2	CN202	C3	IC500	A3	Q318	*C3	R115	*F2
C500	*A4	C729	E2	CN203	A3	IC501	A4	Q319	*D2	R116	F2
C502	*F5	C730	D2	CN204	C4	IC502	F4	Q323	*D2	R117	F2
C504	*F5	C731	*E2	CN205	D4	IC503	F5	Q400	*B3	R118	F2
C505	*F5	C733	*D2	CN206	A3	IC504	A4	Q401	*B3	R119	F2

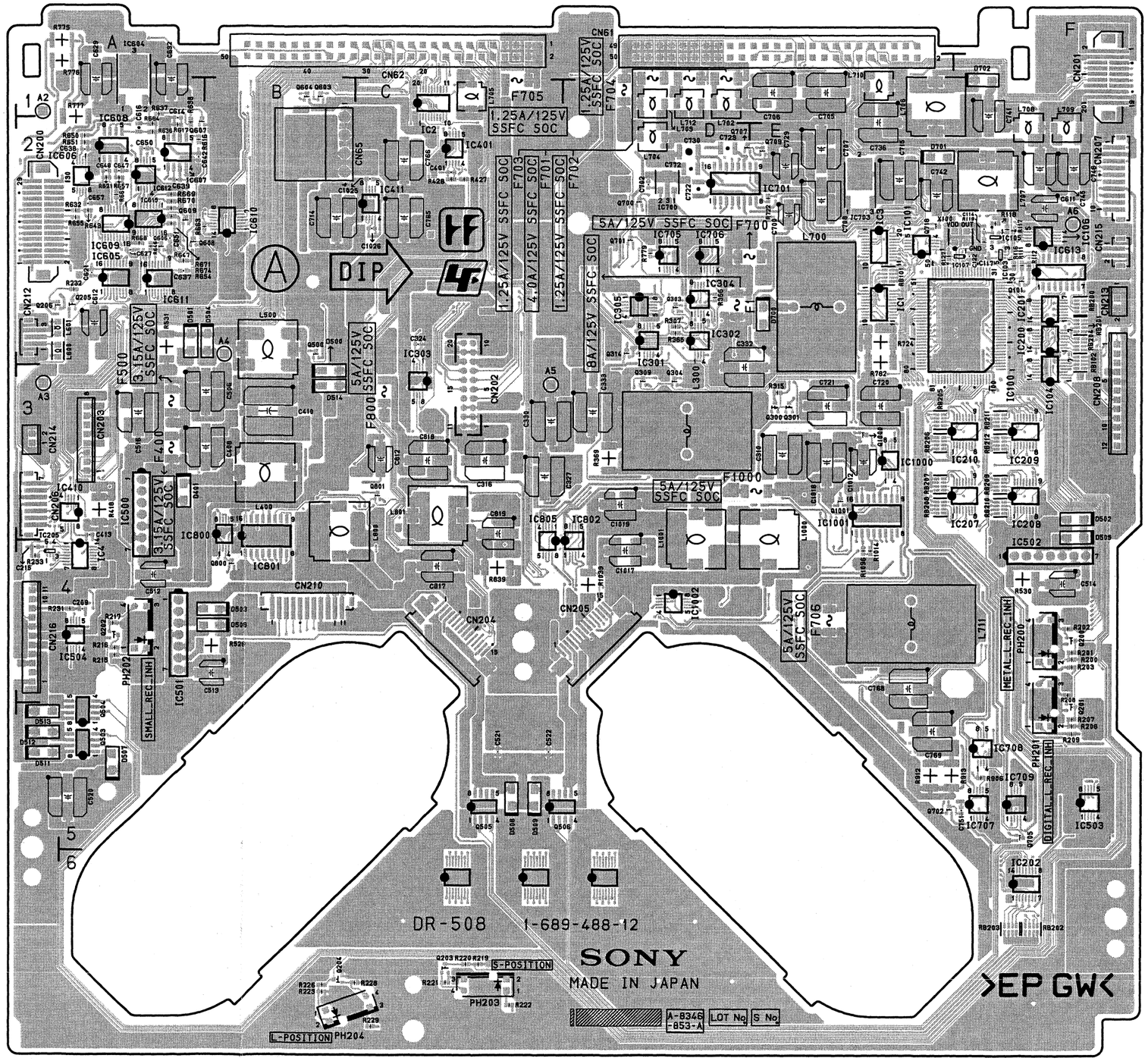

DR-508 -A SIDE-
SUFFIX: -12

HDW series, DVW series, MSW series

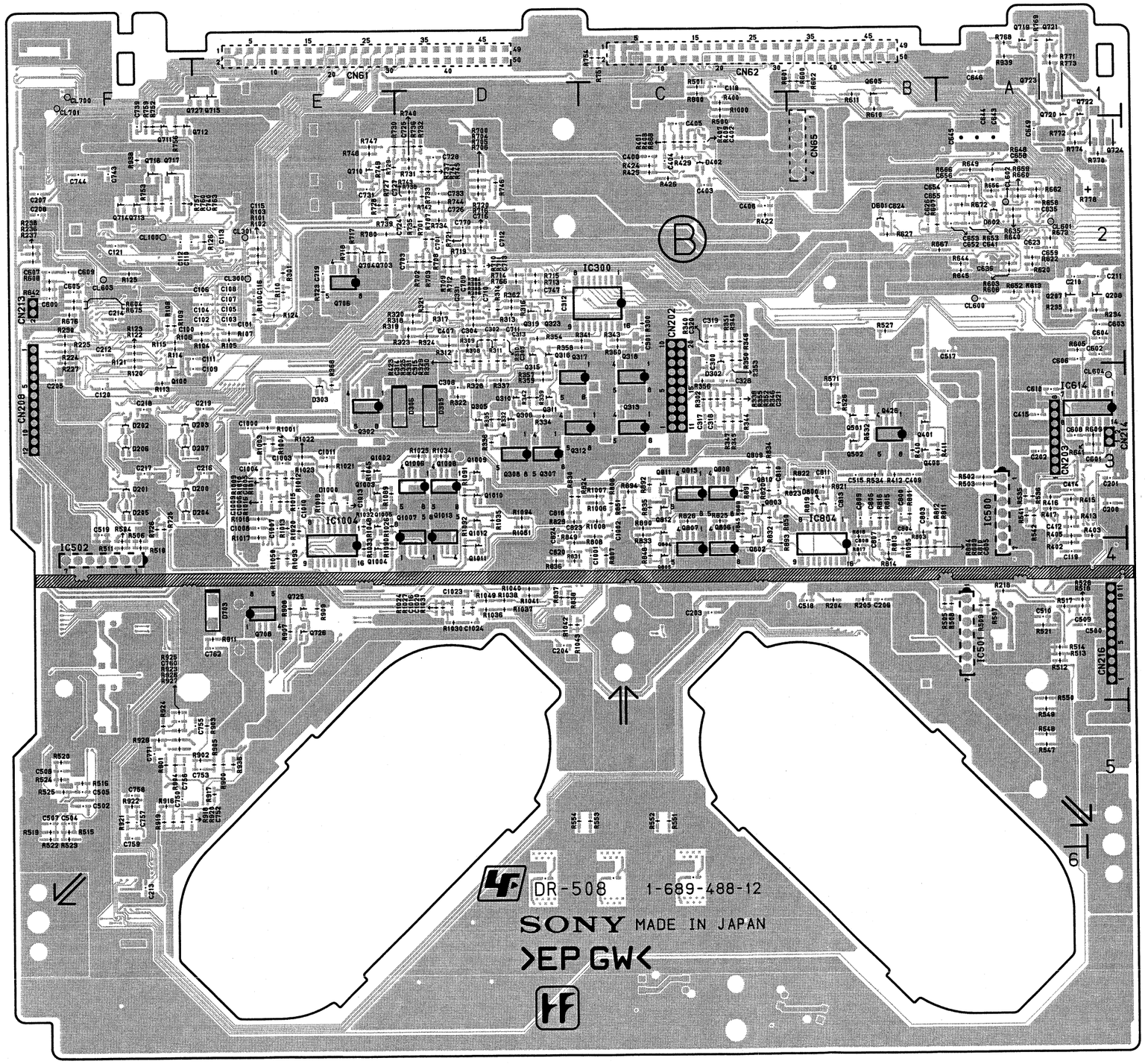

DR-508 -B SIDE-
SUFFIX: -12

R120	*F2	R353	*C2	R608	*F2	R740	*D2	R911	*E4
R121	*F2	R354	*D2	R609	*A3	R741	*D2	R912	E5
R122	*F2	R355	*C3	R610	*B1	R742	*D2	R913	E5
R123	*F2	R356	*C3	R611	*B1	R743	*D2	R916	*F5
R124	*E2	R357	*D3	R613	*A2	R744	*D2	R917	*E5
R125	*F2	R358	*C2	R616	A2	R745	*D2	R918	*F5
R126	*E2	R359	*D3	R617	A2	R746	*D2	R919	*F5
R127	E2	R360	*C2	R620	*A2	R747	*E2	R920	*F5
R200	F4	R362	*D2	R621	A2	R748	*E2	R921	*F5
R201	F4	R365	D2	R622	*A2	R749	*E2	R922	*F5
R202	F4	R366	D2	R627	*B2	R751	*C1	R923	*F5
R203	F4	R368	*E3	R632	A2	R752	*F2	R924	*F5
R204	*B4	R369	D3	R635	*A2	R753	*F2	R925	*F5
R205	*B4	R400	*C1	R636	A2	R754	*C1	R926	*F5
R206	F5	R401	*C2	R637	A1	R756	*F2	R927	*F5
R207	F5	R402	*A4	R638	A2	R757	*F2	R928	*F5
R208	F4	R403	*A3	R640	*A2	R759	*F2	R936	*E5
R209	F5	R405	*A3	R641	*A3	R760	*F2	R938	*F2
R215	A4	R407	*C2	R642	*F2	R763	*F2	R939	*A1
R216	A4	R408	*C2	R643	A2	R766	*D2	R1000	*C1
R217	A4	R409	*C2	R644	*A2	R768	*A1	R1001	*E3
R218	*A4	R410	*B3	R645	*A2	R769	*A1	R1003	*E3
R219	C6	R411	*B3	R646	A2	R770	*A2	R1004	*E3
R220	C6	R412	*B3	R647	A2	R771	*A1	R1006	*C3
R221	C6	R413	*A3	R648	*A2	R772	*A2	R1007	*C3
R222	C6	R415	*A3	R649	*A2	R773	*A1	R1008	*C3
R223	B6	R416	*A3	R650	A2	R774	*A2	R1009	*E3
R224	*F2	R417	*A3	R651	A2	R775	A1	R1010	*E3
R225	*F2	R418	A3	R652	*A2	R776	A1	R1011	*E3
R226	B6	R422	*C2	R653	*A2	R777	A1	R1012	*E3
R227	*F2	R423	*D2	R654	A2	R778	*A2	R1013	*E3
R228	B6	R424	*C2	R655	A2	R779	D2	R1014	E4
R229	C6	R425	*C2	R656	*A2	R780	*E2	R1015	*E3
R230	*F2	R426	*C2	R657	A2	R782	E2	R1016	*E3
R231	A4	R427	C2	R658	*A2	R800	*C1	R1017	*E3
R232	A2	R428	C2	R659	*A2	R801	*B3	R1018	*E3
R233	A4	R429	*C2	R660	*A2	R803	*B3	R1019	*E3
R234	*A2	R500	*C1	R661	A2	R804	*B4	R1020	*E3
R235	*A2	R501	*C1	R662	*A2	R806	*C3	R1021	*E3
R236	*F2	R502	*A3	R663	A2	R807	*C4	R1022	*E3
R237	*F2	R503	*A3	R664	A2	R808	*C3	R1023	*E3
R238	*F2	R504	*F3	R666	*A2	R809	*B4	R1024	*D4
R300	*C2	R505	*A4	R667	*A2	R810	*B4	R1025	*D3
R301	*E2	R506	*F3	R668	A2	R811	*A3	R1026	*E3
R302	*C3	R507	*A4	R669	A2	R812	*B3	R1027	*D4
R303	*D2	R508	*A4	R670	A2	R813	*B3	R1030	*D4
R304	*D2	R509	*A4	R671	A2	R814	*B4	R1031	*D4
R305	*D2	R510	*F4	R672	*A2	R815	*B3	R1032	*E3
R306	*D2	R511	*F4	R673	*A2	R816	*B3	R1033	*E4
R307	D2	R512	*A4	R674	A2	R817	*B4	R1034	*D3
R308	*D2	R513	*A4	R675	*F2	R818	*B3	R1035	*D3
R309	*D2	R514	*A4	R676	*F2	R819	*B3	R1036	*D4
R310	*D2	R515	*F5	R700	*D2	R820	*C3	R1037	*D4
R311	*D2	R516	*F5	R701	*D2	R821	*B3	R1038	*D4
R312	*D2	R517	*A4	R702	*D2	R822	*B3	R1039	D4
R313	*D2	R518	*A4	R703	*D2	R823	*B3	R1040	*D4
R314	*D2	R519	*F5	R704	*D2	R824	*D3	R1041	*D4
R315	E3	R520	*F5	R705	*D2	R825	*C3	R1042	*D4
R316	*D2	R521	*A4	R706	*D2	R826	*C3	R1043	*D4
R317	*D2	R522	*F5	R707	*D2	R829	*D3	R1045	*E3
R318	*D2	R523	*F5	R708	*D2	R830	*D3	R1048	*E3
R319	*D2	R524	*F5	R709	*D2	R831	*D4	R1049	*D4
R320	*D2	R525	*F5	R710	*D2	R832	*C3	R1050	*E4
R321	*D2	R526	*B3	R711	*D2	R833	*C3	R1051	*D3
R322	*D3	R527	*B2	R712	*D2	R834	*C3	R1089	*E3
R323	*D2	R528	*A4	R713	*D2	R835	*C3	R1090	*E4
R324	*D2	R529	B4	R714	*D2	R836	*D4	R1091	*D3
R325	*D2	R530	F4	R715	*D2	R837	*D4	R1092	*D4
R328	*D3	R531	A2	R716	*D2	R838	*D4	R1093	*E4
R329	*D2	R532	*B3	R717	*E2	R839	C4	R1094	*D3
R330	*D2	R534	*B3	R718	*E2	R845	*C3	R1095	*B4
R331	*D2	R535	*A3	R719	*D2	R848	*C4	R1096	E4
R332	*D3	R536	*A3	R720	*D2	R849	*D3		
R334	*D3	R541	*A3	R721	*D2	R850	*C3	RB101	E2
R335	*D3	R542	*A3	R722	E2	R851	*C3	RB102	F2
R336	*D3	R547	*A5	R723	*E2	R888	*C2	RB200	F2
R337	*D3	R548	*A5	R724	E2	R889	*C3	RB201	F2
R338	*C3	R549	*A5	R725	*F3	R890	*C3	RB202	F6
R339	*D3	R550	*A4	R726	*F3	R891	*C3	RB203	F6
R340	*C2	R551	*C5	R727	*E2	R892	*C3	RB204	F2
R341	*C2	R552	*C5	R728	*E2	R893	*C4	RB205	E3
R342	*D3	R553	*C5	R729	*E2	R894	*C3	RB206	E3
R343	*C2	R554	*D5	R730	*E2	R900	*E5	RB207	E3
R344	*C3	R571	*B3	R731	*D2	R901	*F5	RB208	E3
R345	*C3	R600	*B1	R732	*D2	R902	*E5	RB209	F3
R346	*C3	R601	*B1	R733	*D2	R903	*E5	RB210	F3
R347	*C3	R602	*B1	R734	*D2	R904	*F5	RB211	F3
R348	*C2	R603	*A2	R735	*D2	R905	*E5	RB212	F3
R349	*C2	R604	*F2	R736	*D2	R906	F5		
R350	*C2	R605	*A2	R737	*D2	R907	*E4	X100	F2
R351	*C2	R606	*A2	R738	*D2	R908	*E4		
R352	*C3	R607	*B2	R739	*D2	R909	*E4	*:B SIDE	

DSP-109 (1-863-832-11)

C5	H2	C416	*C3	E1	A2
C6	D5	C417	*C3	E2	F1
C7	D5	C418	*C4	E3	G5
C8	H2	C419	*B4	E4	A5
C9	*B5	C420	*B3		
C10	*C5	C421	*C4	FL401	D2
C11	G1	C422	*C3		
C13	*H2	C423	*C4	IC1	F3
C14	*H2	C424	*C3	IC2	C4
C15	*B3	C425	*C4	IC3	H1
C107	*F3	C426	*C3	IC4	B5
C108	*F3	C427	*B4	IC5	C5
C109	*F3	C428	*C4	IC6	G2
C110	*F3	C429	*C4	IC7	G2
C111	*G3	C430	*D3	IC15	*B3
C112	*G3	C431	*C4	IC101	*B4
C113	*F2	C432	*C4	IC201	C2
C114	*G3	C433	*B4	IC202	D2
C115	*G3	C434	*C4	IC203	E2
C116	*F2	C435	*D4	IC204	F2
C117	*F3	C436	*C4	IC205	G4
C118	*F3	C437	*B4	IC206	*F4
C119	*F3	C438	*D3	IC401	*C2
C120	*F3	C440	*C4	IC402	*C1
C121	*F3	C441	*B4	IC403	C2
C122	*F3	C442	*C4	IC404	*C2
C123	*F3	C443	*C3		
C124	*F3	C444	*C3	Q1	G2
C125	*F3	C445	*C4	Q401	*B1
C126	*F3	C446	*B4	Q402	*A1
C127	*F3	C447	*B4	Q403	*A1
C128	*F3	C449	*B3	Q404	*A1
C129	*F3	C450	*C4		
C130	*F3	C451	*C4	R21	*G1
C131	*F3	C452	*B4	R22	*G2
C132	*F2	C453	*B4	R23	*H2
C133	*G2	C454	*C4	R24	C5
C134	*G4	C455	*C4	R25	C5
C135	*E2	C456	*B4	R28	C5
C136	*G3	C457	*B3	R29	*G2
C137	*G3	C458	*D3	R30	*C5
C138	*G3	C459	*B4	R31	*C5
C139	*G3	C460	*C3	R32	*C5
C140	*E2	C461	*C4	R33	*C5
C141	*G2	C462	*C4	R34	*C5
C142	*G2	C463	*C3	R35	*G2
C143	*G2			R36	*B5
C144	*E3	CL1	H3	R37	*B5
C145	*E3	CL2	D5	R38	*B5
C146	*G2	CL100	F2	R39	*B5
C147	*F3	CL101	F4	R41	*B5
C148	*F3	CL102	F2	R42	*B5
C149	*F3	CL103	F4	R43	*B5
C150	*G3	CL104	F2	R44	*B5
C151	*G3	CL105	F4	R45	*B5
C152	*F2	CL106	F2	R46	*B5
C153	*F2	CL107	F4	R47	G1
C154	*F2	CL108	F4	R49	G4
C155	*G2	CL109	F2	R50	*G4
C156	*E3	CL110	G2	R51	*G4
C157	*B4	CL111	E2	R52	G4
C201	C1	CL401	C3	R101	*F2
C202	D1	CL402	D3	R104	*G3
C203	E1	CL403	C5	R106	*G3
C204	F1	CL404	D4	R107	*G4
C205	D1	CL405	B5	R113	C1
C206	E1	CL406	B5	R122	*F4
C207	F1	CL407	B5	R124	*G2
C208	F1	CL408	B5	R126	*E4
C209	*F4	CL409	C1	R127	*G2
C210	*G4	CL410	B2	R128	*B5
C211	F5	CL411	D4	R129	*G2
C212	G5	CL412	C4	R130	*E1
C213	*G5	CL413	C4	R131	*E1
C214	F5	CL414	D3	R202	*D2
C215	*G4	CL415	D3	R203	*D2
C216	*F4			R204	*D2
C401	*E2	CN6	*D5	R205	*D2
C402	D3	CN401	A3	R206	*D2
C403	D2	CN501	*H4	R207	*D2
C404	*C1			R210	E4
C405	C2	D1	E5	R211	D4
C406	*C3	D2	E5	R212	F5
C407	C2	D3	E5	R213	*F1
C408	*C3	D4	E5	R214	D4
C409	B3	D5	E5	R215	E4
C410	*B2	D6	E5	R216	*E4
C411	C3	D7	F5	R217	*F2
C412	*C2	D8	F5	R218	*F2
C413	*C4	D101	C1	R219	*E2
C414	*C4	D401	*B4	R220	*E2
C415	*C3			R221	*E2

RB222	*E2	RB27	*E5
RB223	*E2	RB28	*E5
RB224	*E2	RB29	*C4
RB225	*F2	RB30	*C4
RB226	*F2	RB33	*D4
RB227	*G5	RB34	*D4
RB401	*D2	RB35	*E4
RB402	*E3	RB36	*E4
RB403	*D2	RB37	*B3
RB404	*D2	RB201	E5
RB405	*E2	RB202	E5
RB408	*D2	RB205	*E3
RB409	*B3	RB206	*D3
RB410	*B3	RB207	*E3
RB411	*B3	RB208	*D3
RB412	*C3	RB209	*E3
RB413	*C3	RB210	*D4
RB414	*C3	RB211	*E4
RB415	*C3	RB212	*D4
RB416	*C3	RB213	*B4
RB417	*C3	RB214	*D4
RB418	*C3	RB215	*E4
RB419	*B4	RB216	*F4
RB420	*B4	RB218	*F2
RB421	*B4		
RB423	*D4	S10	*1*
RB424	*D4	S11	A
RB425	*D4		
RB426	*D4	TP1	D4
RB427	E3	TP2	E4
RB428	*D3		
RB429	C1	X1	D5
RB430	B1	X2	D5
RB431	*B1		
RB432	C1	*:B SIDE	
RB433	C1		
RB434	C1		
RB435	C1		
RB436	B1		
RB437	C1		
RB438	*B1		
RB439	*B1		
RB440	B1		
RB441	C1		
RB442	*B1		
RB443	*B1		
RB444	*B3		
RB445	*D3		
RB446	*D4		
RB447	*D4		
RB448	*D3		
RB449	*D3		
RB450	*D4		
RB451	*D4		
RB452	*B4		
RB453	*B4		
RB454	*B4		
RB455	*D4		
RB456	*D4		
RB457	*D4		
RB458	*D4		
RB459	*D3		
RB460	*D3		
RB461	*D3		
RB462	*C3		
RB463	*B1		
RB464	*B1		
RB465	*A1		
RB466	*A1		
RB467	D2		
RB468	D2		
RB469	D2		
RB470	D2		
RB471	*D2		
RB472	*D2		
RB1	G5		
RB2	G5		
RB3	G5		
RB4	G4		
RB5	G4		
RB6	G4		
RB7	G4		
RB9	G3		
RB10	G3		
RB11	G3		
RB18	G4		
RB19	G4		
RB20	*C5		
RB21	*C5		
RB25	*D5		
RB26	*E5		

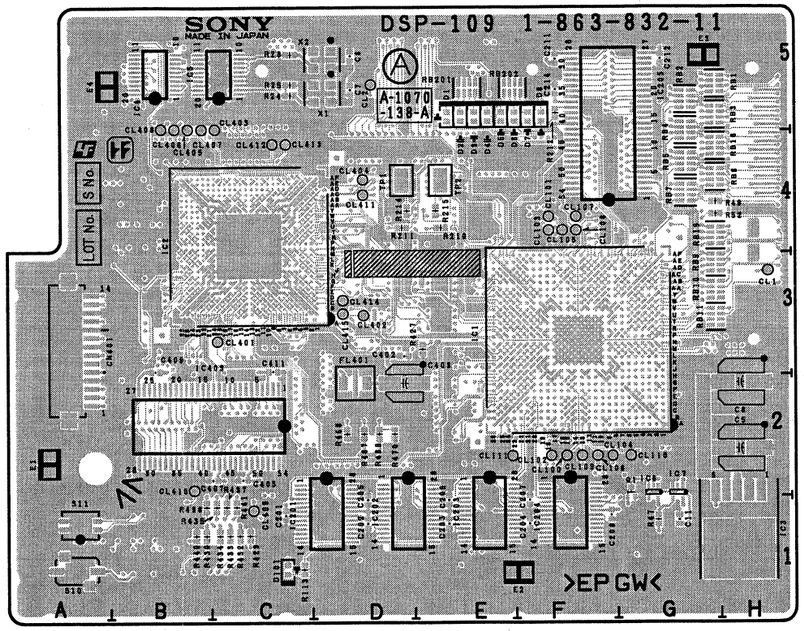

DSP-109 -A SIDE-
SUFFIX: -11

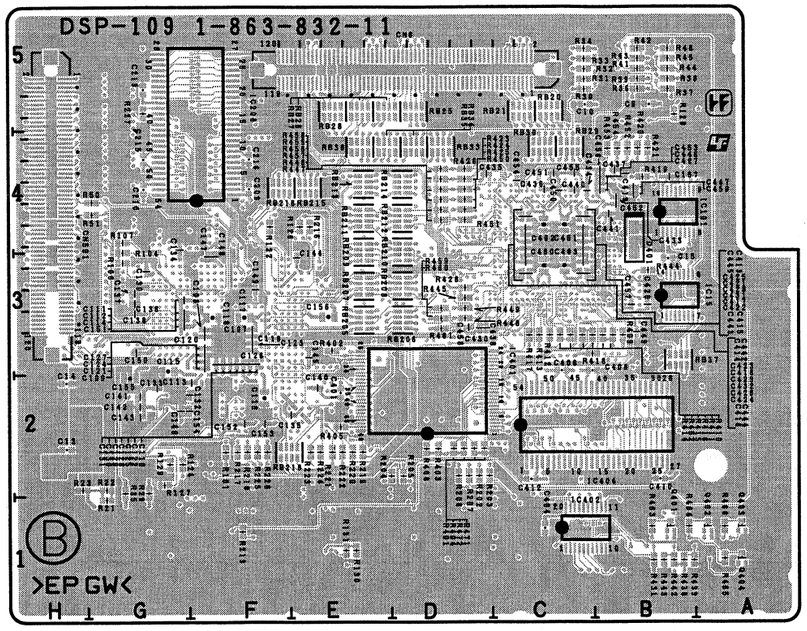

DSP-109 -B SIDE-
SUFFIX: -11

DT-47 (1-677-280-12)

C1	D1	Q1	C1	T1 D3
C2	D1	Q2	C1	
C3	*C1	Q3	*D3	TP100 A2
C4	*C2	Q4	*D2	TP200 B2
C5	*E3	Q5	B2	
C6	*E3	Q6	B3	*:B SIDE
C7	*E3	Q100	A3	
C8	*E3	Q101	A3	
C9	*E2	Q102	A2	
C10	*E3	Q103	A2	
C11	*E2	Q104	A2	
C12	*E2	Q105	A2	
C13	B2	Q200	B3	
C14	C2	Q201	B3	
C15	C1	Q202	B2	
C16	*C1	Q203	B2	
C17	*D1	Q204	B2	
C20	C2	Q205	B3	
C21	B2			
C22	*D2	R1	C1	
C23	D2	R2	C1	
C24	D2	R3	C1	
C25	E2	R4	E2	
C26	D3	R5	E2	
C27	D3	R6	*E2	
C28	*D3	R7	*E2	
C29	*D2	R8	*E2	
C30	*D2	R11	*D3	
C31	C2	R12	*D2	
C32	C3	R13	*D2	
C33	C2	R14	C1	
C34	C3	R15	C1	
C35	C2	R100	D1	
C36	B3	R101	D1	
C37	C2	R102	D1	
C100	D1	R103	D1	
C101	D1	R104	*E3	
C103	*E3	R105	E3	
C104	B3	R106	*E3	
C105	B2	R107	A3	
C106	*A3	R108	*E3	
C109	C1	R109	*E3	
C200	D1	R110	*A3	
C201	C1	R111	A3	
C202	*E3	R112	A3	
C203	*B3	R114	B3	
C204	B3	R115	B2	
C205	C2	R116	A2	
C206	C1	R117	A2	
C207	C1	R118	A2	
C209	C1	R119	*A2	
		R120	*A2	
CN201	B1	R121	*A2	
CN220	A2	R122	E3	
		R123	*A2	
D2	B2	R124	*A2	
D3	C2	R125	B2	
D4	B2	R126	*B2	
D5	C3	R127	C1	
D6	C3	R128	D1	
D7	C3	R200	C1	
D8	C3	R201	C1	
D100	E3	R202	D1	
D101	A2	R203	C1	
D200	E3	R204	*E3	
D201	*B3	R205	E3	
D202	C3	R206	*E3	
		R207	B3	
E1	D2	R208	*E3	
		R209	*E3	
F1	D2	R210	B3	
		R211	B3	
IC1	*C1	R212	B3	
IC2	D1	R214	B3	
IC3	E3	R215	*B3	
IC4	E3	R216	B2	
IC5	E2	R217	B2	
IC6	E3	R218	B2	
IC7	C2	R219	B2	
IC8	E2	R220	B2	
IC9	C1	R221	B2	
IC10	*D1	R222	E2	
		R223	B2	
L1	C2	R224	B2	
L2	B1	R225	C2	
L3	D2	R226	*B2	
L4	E2	R227	C1	
L5	D2	R228	D1	
L6	C2	R229	*C3	
L7	C3	R230	*B3	
L8	C2			
L9	B3	RY1	B2	

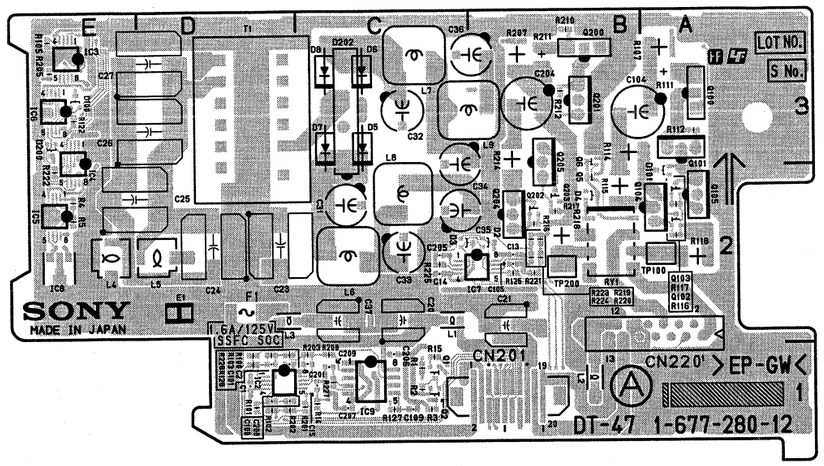

DT-47 -A SIDE-
SUFFIX: -12

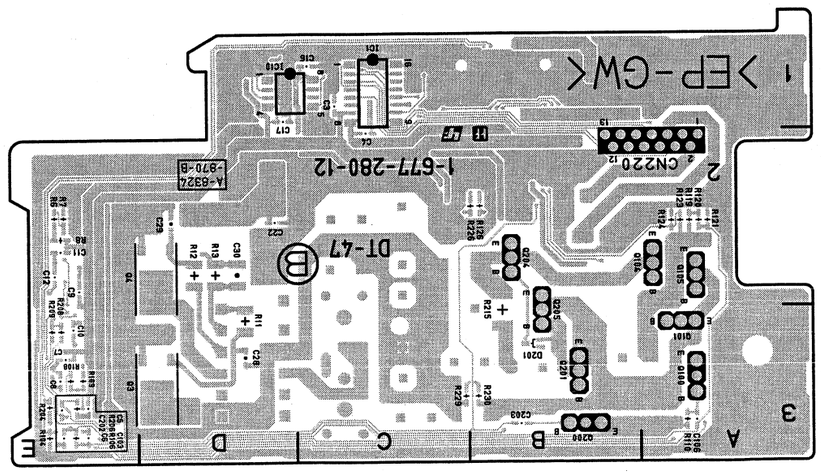

DT-47 -B SIDE-
SUFFIX: -12

DT-47 (1-677-280-11)

C1	D1	Q1	C1	T1 D3
C2	D1	Q2	C1	
C3	*C1	Q3	*D3	TP100 A2
C4	*C2	Q4	*D2	TP200 B2
C5	*E3	Q5	B2	
C6	*E3	Q100	A3	*:B SIDE
C7	*E3	Q101	A3	
C8	*E3	Q102	A2	
C9	*E2	Q103	A2	
C10	*E3	Q104	A2	
C11	*E2	Q105	A2	
C12	*E2	Q200	B3	
C13	B2	Q201	B3	
C14	C2	Q202	B2	
C15	C1	Q203	B2	
C16	*C1	Q204	B2	
C17	*D1	Q205	B3	
C20	C2			
C21	B2	R1	C1	
C22	*D2	R2	C1	
C23	D2	R3	*C1	
C24	E2	R4	E2	
C25	E2	R5	E2	
C26	E3	R6	*E2	
C27	E3	R7	*E2	
C28	*D3	R8	*E2	
C29	*D2	R11	*D3	
C30	D2	R12	*D2	
C31	C2	R13	*D2	
C32	C3	R14	C1	
C33	C2	R15	C1	
C34	C3	R100	D1	
C35	C2	R101	D1	
C36	C3	R102	D1	
C37	C2	R103	D1	
C40	B2	R104	*E3	
C100	D1	R105	E3	
C101	D1	R106	*E3	
C103	*E3	R107	A3	
C104	B3	R108	*E3	
C105	B2	R109	*E3	
C106	*A3	R110	*A3	
C109	C1	R111	A3	
C200	D1	R112	A3	
C201	C1	R114	B3	
C202	*E3	R115	B2	
C203	*C3	R116	A2	
C204	B3	R117	A2	
C205	C2	R118	A2	
C206	C1	R119	*A2	
C207	C1	R120	*A2	
C209	C1	R121	*A2	
		R122	E3	
CN201	B1	R123	*A2	
CN220	A2	R124	*A2	
		R125	B2	
D2	B2	R126	*B2	
D3	C2	R127	C1	
D4	B2	R128	D1	
D100	E3	R200	C1	
D101	A2	R201	C1	
D200	E3	R202	D1	
D201	*B3	R203	C1	
D202	C2	R204	*E3	
D203	C2	R205	E3	
D204	C3	R206	*E3	
D205	C3	R207	B3	
		R208	*E3	
E1	D2	R209	*E3	
		R210	B3	
F1	D3	R211	B3	
		R212	B3	
IC1	*C1	R214	B3	
IC2	D1	R215	*B3	
IC3	E3	R216	B2	
IC4	E3	R217	B2	
IC5	E2	R218	B2	
IC6	E3	R219	B2	
IC7	C2	R220	B2	
IC8	E2	R221	B2	
IC9	C1	R222	E2	
IC10	*D1	R223	B2	
		R224	B2	
L1	C2	R225	C2	
L2	B1	R226	*B2	
L3	D2	R227	C1	
L4	D2	R228	D1	
L5	D2	R229	C3	
L6	C2	R230	C3	
L7	C3			
L8	C2	RY1	B2	
L9	C3			

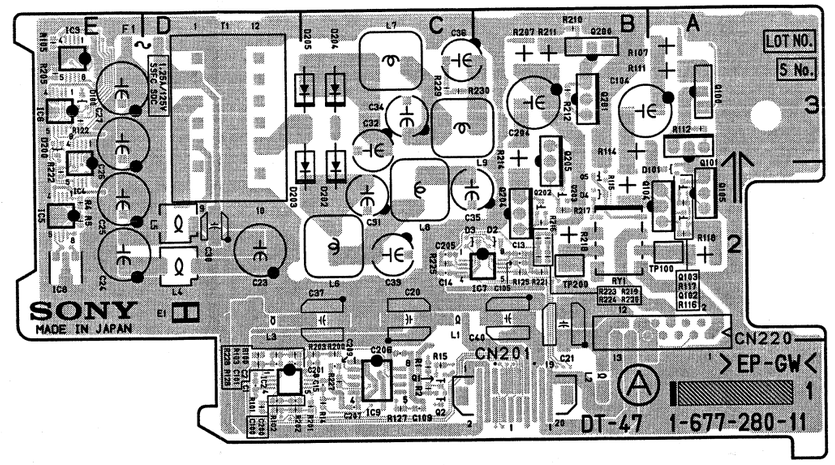

DT-47 -A SIDE-
SUFFIX: -11

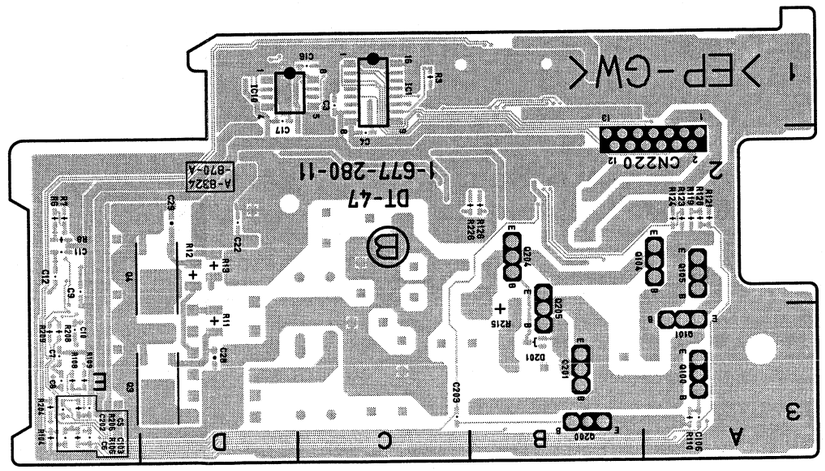

DT-47 -B SIDE-
SUFFIX: -11

EPR-1 (1-677-268-17)

C1	*A4	C346	*K4	C600	*K2	C912	*F3	C1233	*A1	CL314	J3	CL801	*F4	IC109	*C4	L700	*E4	R308	F1	R549	J1	R746	K4
C4	*A4	C354	*J4	C601	*K2	C913	*F3	C1234	*A2	CL315	J3	CL802	*F4	IC110	*C4	L701	E4	R309	*F1	R550	K2	R747	*L5
C5	*B4	C401	*H3	C602	*K2	C914	*G2	C1235	*A2	CL316	J3	CL803	*F3	IC111	C3	L702	*C3	R310	*F1	R551	*H1	R748	*L5
C6	*A4	C402	*H3	C603	*K2	C915	G1	C1236	*B1	CL317	J4	CL925	F2	IC112	*C4	L800	G4	R311	*F1	R552	*H1	R749	*L5
C7	*A4	C403	*H3	C604	K2	C916	*G1	C1237	*B1	CL318	J4	CL1001	E1	IC113	*C4	L801	H4	R312	*F1	R553	*H1	R750	*K5
C10	A4	C404	*H3	C605	*K2	C1101	*L3	C1238	C2	CL319	J4	CL1002	E1	IC114	*C4	L1101	*L4	R314	J3	R554	*L1	R751	*L5
C11	B4	C405	*H3	C606	*K2	C1102	*L3	C1239	*B1	CL320	J4	CL1003	E1	IC115	C4	L1201	C1	R315	J3	R555	*K1	R752	*L5
C12	A4	C406	*H2	C607	*K2	C1103	*M3	C1240	*B2	CL321	K4	CL1004	E1	IC116	C3	L1301	*C1	R316	J4	R556	*K1	R753	L5
C51	A4	C407	*H2	C608	*K2	C1104	*L3	C1241	C2	CL322	K4	CL1005	E1	IC117	B4	L1302	C1	R317	J4	R557	H1	R754	L5
C52	*A4	C408	*H2	C609	*K2	C1105	*L3	C1242	*A2	CL323	K4	CL1006	E1	IC200	E3	L1303	D1	R318	J3	R600	K2	R755	L5
C61	B4	C409	*G3	C610	*K2	C1106	*L3	C1243	*A2	CL324	K4	CL1007	E1	IC201	E1	L1304	D1	R319	J4	R601	K2	R756	L5
C62	*B4	C410	*H2	C611	*K2	C1107	*L3	C1244	*B2	CL325	K4	CL1008	E1	IC202	E2			R320	J4	R602	*J1	R757	L5
C100	*B4	C411	*H2	C612	K2	C1108	*L3	C1245	*B2	CL326	K4	CL1009	E1	IC300	F1	Q1	*C5	R321	J3	R603	*K2	R758	L5
C101	*B4	C412	*G3	C613	*K2	C1109	*L3	C1246	*A2	CL327	K4	CL1010	E1	IC301	K3	Q51	*A4	R322	J3	R604	*K2	R759	K4
C102	*C4	C413	*H2	C614	K2	C1110	*L3	C1247	*A2	CL328	K4	CL1011	E1	IC304	*J3	Q52	*A4	R323	*K4	R605	K2	R760	F4
C103	C4	C414	*H3	C615	K2	C1111	*M3	C1248	*A2	CL329	K4	CL1012	E1	IC305	*J4	Q61	*B4	R324	*K4	R606	*K2	R761	F4
C104	C4	C415	*G2	C616	K2	C1112	*M3	C1249	*A1	CL330	K4	CL1013	E1	IC400	H3	Q62	*B4	R325	J3	R608	K2	R762	F4
C105	*B4	C416	*H3	C617	K2	C1113	*M3	C1250	*A1	CL331	K4	CL1014	E1	IC401	*J2	Q500	H1	R326	J3	R609	K2	R763	F4
C106	*C4	C417	*H3	C618	K1	C1114	*M3	C1251	*A1	CL332	K4	CL1015	E1	IC500	G1	Q501	*J1	R327	*J4	R610	*H1	R764	F4
C107	C4	C418	*H3	C619	K2	C1115	*M2	C1252	*B2	CL333	K4	CL1016	E1	IC501	H1	Q502	*J1	R328	J3	R611	J2	R765	F3
C108	*C4	C419	H3	C620	*H1	C1116	*L2	C1253	A1	CL334	K4	CL1017	F1	IC502	*G1	Q503	J1	R329	*K4	R612	*H1	R766	F4
C109	B4	C420	*H3	C622	J2	C1117	*L2	C1254	*B2	CL346	K3	CL1018	E1	IC503	J1	Q600	J1	R330	J4	R613	*H1	R767	F4
C110	C4	C421	J3	C623	K1	C1118	L3	C1255	*A1	CL400	H3	CL1101	L4	IC504	J2	Q601	K1	R331	*F1	R614	*H1	R768	F3
C111	B4	C422	*H3	C624	K1	C1119	L2	C1256	*A2	CL401	H3	CL1102	L5	IC505	J2	Q603	H2	R332	J4	R615	J1	R769	F4
C112	C4	C423	*H3	C625	J1	C1120	L2	C1257	*B2	CL402	H3	CL1104	*M4	IC506	H1	Q604	K1	R333	J4	R616	K2	R770	*F4
C113	C4	C424	*H3	C626	K2	C1121	L1	C1258	*B1	CL403	H3	CL1105	*M4	IC507	H1	Q605	K1	R334	J4	R617	K1	R771	F4
C114	C4	C425	*H3	C627	K1	C1122	L1	C1301	*C1	CL404	H3	CL1110	M4	IC508	L1	Q606	K1	R335	J4	R618	K1	R772	F4
C115	*C3	C426	*H2	C628	K1	C1123	*L2	C1302	D1	CL405	H3	CL1111	M4	IC600	K2			R336	J4	R619	K1	R773	K4
C116	C3	C427	*H2	C629	K2	C1124	*L2	C1303	C1	CL406	H3	CL1112	M4	IC602	*J1	R51	*A4	R337	K4	R620	J1	R774	K4
C117	B4	C428	*G2	C630	K1	C1125	M1	C1304	*C1	CL407	H3	CL1113	M4	IC603	*J1	R52	*A4	R338	K4	R621	J1	R775	K4
C200	*E3	C429	*H3	C631	K1	C1126	*M1	C1305	*C2	CL408	H3	CL1201	B2	IC604	*J2	R53	*A4	R339	K4	R623	K1	R780	G4
C201	E3	C430	*G2	C632	K2	C1127	M1	C1306	*C2	CL409	H4	CL1202	A4	IC605	*J1	R54	*A4	R340	K4	R624	K1	R781	*G4
C202	D3	C431	*H3	C633	K1	C1128	*M2	C1307	*D2	CL410	H4	CL1203	A4	IC606	J1	R55	A4	R341	K4	R625	K1	R782	G4
C203	*D3	C432	*G3	C634	K1	C1129	M2	C1308	D2	CL411	H3	CL1204	A4	IC701	D5	R56	A4	R342	J3	R626	K1	R783	*D5
C204	*E1	C433	*H3	C635	K1	C1130	*M2	C1309	C1	CL412	H3	CL1205	A4	IC702	*E5	R57	A4	R343	J3	R627	H1	R800	*E4
C205	*D1	C434	*H3	C636	K1	C1131	M2	C1310	C1	CL413	H3	CL1206	A4	IC703	*E5	R61	*B4	R346	J4	R628	J2	R801	*E4
C206	*D1	C435	*J3	C637	K2	C1132	*M2	C1311	*D1	CL414	H3	CL1207	A4	IC704	*E5	R62	*B4	R347	J4	R629	J1	R802	*E4
C207	*E1	C436	*J2	C638	K1	C1133	*L4	C1312	*D1	CL415	H4	CL1208	A4	IC705	D5	R63	*B4	R348	J4	R630	K1	R803	*E4
C208	E1	C437	H2	C639	K1	C1134	*L4	C1313	*D2	CL416	H4	CL1301	D1	IC706	D5	R64	*B4	R349	J4	R631	K1	R804	*E4
C209	*D2	C438	H3	C640	*J1	C1135	*L4	C1314	*C1	CL417	H3			IC707	D4	R100	*C4	R350	K4	R632	K1	R805	*E4
C210	*D1	C500	G1	C641	J1	C1136	*M4	C1315	C3	CL418	H4	CN1	G1	IC708	D4	R101	*C4	R351	K4	R633	*H1	R806	G4
C211	*D2	C501	H1	C642	*J2	C1137	*L4	C1316	C2	CL419	H3	CN16	K5	IC709	D4	R102	*C4	R352	K4	R634	K1	R807	G4
C212	*E2	C502	*J1	C643	*J2	C1138	*L4	C1317	D2	CL420	H3	CN17	F5	IC710	E4	R103	*C4	R373	J3	R635	K1	R808	F4
C213	*E2	C503	*H1	C644	*J2	C1139	*L4	C1318	C2	CL421	H4	CN18	C5	IC711	F4	R104	*C5	R374	K4	R637	K1	R809	F4
C214	*D2	C504	*H1	C645	*J2	C1140	*L4	C1319	*C1	CL422	H3	CN100	*F4	IC712	D4	R106	*C4	R375	*F1	R638	*K2	R810	F4
C215	*E2	C505	H1	C646	*J2	C1141	*L4	C1320	*D1	CL426	G2	CN500	J1	IC714	*H5	R107	C4	R400	J3	R639	J1	R811	F4
C216	*D2	C506	H1	C647	J1	C1142	*L4	C1321	*D1	CL427	G2	CN501	J1	IC715	*L4	R108	*C3	R401	*G3	R640	K1	R812	F4
C217	*E2	C507	J1	C648	*J1	C1143	*L4			CL428	J2	CN600	K1	IC716	D4	R109	*C4	R402	*G3	R641	J1	R813	F4
C218	D2	C508	J1	C649	K2	C1144	*L4	CL52	B4	CL429	J2	CN601	K1	IC717	D4	R110	*C4	R407	*H3	R643	K1	R814	F4
C300	E1	C509	J1	C650	*K1	C1145	*L4	CL109	C3	CL430	J2			IC718	D4	R118	C3	R408	*G3	R644	*K2	R815	F4
C301	F1	C510	*G1	C651	*K1	C1146	*L4	CL110	C3	CL431	H2	D600	*J1	IC812	E4	R119	*C3	R409	*G3	R645	K1	R816	F4
C302	*F1	C511	H1	C701	*D4	C1147	*L4	CL200	D1	CL432	H2	D601	*J1	IC813	F4	R120	*C3	R410	*H2	R646	*K2	R817	F4
C303	*E1	C512	H2	C702	E4	C1148	*M4	CL201	D2	CL433	J3	D602	*J2	IC814	F4	R121	*C3	R500	*G1	R647	K1	R818	F4
C304	*E1	C513	*J2	C703	E4	C1149	*M4	CL202	D2	CL434	J3	D603	*J2	IC816	G4	R122	*C3	R501	*G1	R648	K1	R819	F4
C305	*E1	C514	G1	C704	F4	C1150	*M4	CL203	D2	CL435	H3			IC817	G4	R123	*C3	R502	*G1	R649	K1	R820	F4
C306	*F1	C515	H1	C705	E4	C1151	*M4	CL204	D2	CL436	H3	E101	C3	IC818	H4	R124	*C3	R503	*G1	R650	*J2	R821	F4
C307	*F1	C516	H1	C706	*D4	C1152	*M4	CL205	D2	CL437	H3	E300	*D1	IC819	H4	R125	*C3	R505	*G1	R651	*J2	R822	G4
C308	F1	C517	*J1	C707	*D4	C1153	*M4	CL206	D2	CL438	G2	E301	*L4	IC820	E3	R126	*C3	R506	*H1	R652	*J2	R823	G4
C309	*F1	C518	*J1	C708	*D4	C1154	*M4	CL207	D2	CL439	J2	E500	*K2	IC900	F2	R127	*C3	R507	*H1	R653	*J2	R824	G4
C310	*F1	C519	*H1	C710	*D5	C1155	*M4	CL208	D2	CL440	H2	E600	H1	IC901	G1	R128	C5	R508	H1	R700	*D5	R825	G4
C311	*E1	C520	*H1	C711	E4	C1201	*A3	CL209	E2	CL441	J2	E1101	L4	IC902	*G1	R129	C5	R509	H1	R705	*D5	R826	*G3
C312	*E1	C521	*J2	C712	*F4	C1202	*A3	CL210	D1	CL442	H2	E1201	D1	IC1101	*M4	R200	*D3	R510	J1	R707	*D4	R827	F3
C313	*E1	C522	H1	C713	*D4	C1203	*A3	CL211	D2	CL443	J2			IC1102	*L3	R201	*D3	R511	*J1	R708	E4	R828	*H4
C314	*F2	C523	*H1	C714	*D4	C1204	*A3	CL212	D2	CL444	H2	F1	A4	IC1103	L3	R202	*D3	R512	J1	R709	E4	R829	H4
C315	F1	C524	*H1	C715	*H4	C1205	*A2	CL213	D2	CL445	J2	F2	B4	IC1104	L4	R203	*D3	R513	H1	R714	D4	R830	*H4
C316	*J4	C525	*J1	C716	*L4	C1206	*B2	CL214	D2	CL446	H2	F3	A4	IC1105	L2	R204	*E1	R515	H1	R715	D4	R831	H4
C317	*K4	C526	*J1	C717	*D4	C1207	*B3	CL215	D2	CL447	H2			IC1106	L1	R205	*E2	R516	*H1	R716	D4	R832	*H4
C318	*K4	C527	*J2	C718	*E4	C1208	*B3	CL216	D2	CL448	H2	FB500	*J2	IC1107	*L2	R206	*E2	R517	*H1	R717	D4	R833	H4
C319	*J3	C528	*J2	C719	*D4	C1209	*B3	CL217	D2	CL449	H2	FB501	*J2	IC1108	L1	R207	*E2	R518	*H1	R718	D3	R834	*E4
C320	*J3	C529	*J1	C720	*D4	C1210	*A3	CL218	E2	CL450	H2	FB502	*J2	IC1109	*L1	R208	*D2	R519	H1	R719	D3	R835	H4
C321	K4	C530	*H1	C721	*D3	C1211	*A3	CL219	E2	CL451	H2	FB503	*J2	IC1110	L2	R209	*D2	R520	*H2	R720	D3	R836	H4
C322	K4	C531	*J2	C800	*E4	C1212	*A3	CL220	E2	CL452	J2	FB504	J1	IC1111	*L2	R210	*E2	R521	H1	R721	D3	R837	H4
C325	*K4	C532	H2	C801	*F4	C1213	*B3	CL221	D2	CL453	H2	FB505	*H1	IC1201	B3	R211	*D2	R523	J1	R722	D3	R838	H4
C326	*J4	C534	H2	C802	E3	C1214	*B3	CL222	*E1	CL454	H2	FB506	*H1	IC1203	*A3	R212	*D2	R527	J2	R723	D3	R839	G4
C327	*K3	C535	H2	C803	*F4	C1215	*A3	CL223	*E1	CL455	J2	FB507	*H1	IC1204	B2	R213	*D2	R530	*H2	R724	E3	R840	F4
C328	*K4	C536	H2	C805	*G4	C1216	*A2	CL224	*D1	CL456	H2	FB508	J1	IC1205	*C2	R214	*D2	R531	*H2	R725	E3	R841	G4
C329	*J3	C537	*H1	C806	*G4	C1217	*B2	CL225	*E1	CL457	H2	FB600	*K2	IC1207	*B1	R215	*D2	R532	*J2	R726	D4	R842	G4
C330	*J3	C538	*L1	C808	*G4	C1218	*B2	CL226	*E1	CL458	H2	FB601	K1	IC1208	C2	R216	*E1	R533	*J2	R727	D4	R843	G4
C331	K3	C539	*J2	C810	*H4	C1219	*B3	CL227	*D1	CL459	H2	FB602	K1	IC1301	C2	R217	*D3	R534	*J2	R728	D4	R844	*E3
C332	*J3	C540	*K2	C811	G4	C1220	*B3	CL228	*E1	CL500	H1	FB603	K1	IC1302	*C1	R218	*D3	R535	*J2	R729	E4	R845	*H4
C333	*J4	C541	*J1	C812	H4	C1221	*B3	CL229	*E1	CL501	H1			IC1303	*C1	R219	*D3	R536	*J1	R730	E4	R846	*H4
C334	*K4	C542	J1	C901	G2	C1222	*B3	CL300	F2	CL600	K2	IC1	*C4	IC1304	*C2	R220	E3	R537	*J1	R731	E4	R847	*H4
C335	*K3	C543	*H1	C902	G2	C1223	*B3	CL301	F1	CL704	*F4	IC2	A4	IC1305	C1	R221	E2	R538	*J1	R732	E4	R848	*H4
C336	*J4	C544	H1	C903	*G2	C1224	*B3	CL302	E1	CL705	*F4	IC100	B4	IC1306	*D2	R222	E1	R539	*J1	R733	E4	R901	F3
C337	J3	C545	J1	C904	*F2	C1225	*B3	CL303	E1	CL706	*F4	IC101	C4	IC1307	*D1	R300	E1	R540	K2	R734	D3	R902	*F2
C338	*K3	C546	J1	C905	*G2	C1226	*B3	CL304	E1	CL707	*G4	IC102	C4			R301	F1	R541	J2	R735	D3	R903	F2
C339	K3	C547	J1	C906	*G3	C1227	*B3	CL308	J4	CL708	*G4	IC103	C4	L1	B4	R302	*F1	R543	*J1	R736	D4	R904	*E3
C340	*K4	C548	*L1	C907	*G3	C1228	*A3	CL309	J4	CL709	*G4	IC104	B4	L2	A4	R303	*F1	R544	*J1	R737	E4	R905	F2
C341	*K4	C549	K1	C908	*F3	C1229	*A3	CL310	J4	CL710	*F4	IC105	*B4	L100	*C4	R304	*F1	R545	*J1	R738	*E5	R906	*F2
C342	*K4	C550	H1	C909	*F2	C1230	*B1	CL311	J4	CL711	*F4	IC106	*C4	L101	B4	R305	F1	R546	*J1	R743	K4	R907	*F2
C344	*J4	C551	*H1	C910	*F3	C1231	*B1	CL312	J3	CL712	*G4	IC107	B4	L304	*J4	R306	F1	R547	J1	R744	*L5	R908	F3
C345	*K3	C552	*J2	C911	*F2	C1232	*B1	CL313	J3	CL800	*F4	IC108	*C4	L500	J1	R307	F1	R548	J1	R745	*L5	R909	*E2

R910	E3	R1171	*M3	RB204	E3																		
R911	F2	R1201	E3	RB205	E3																		
R912	F2	R1202	E3	RB300	*F1																		
R913	*F2	R1203	*B3	RB301	*F1																		
R914	*G3	R1204	*B3	RB302	*F1																		
R915	*E3	R1205	*B3	RB303	*F1																		
R916	*G1	R1206	*B3	RB400	*G2																		
R917	*F3	R1207	*B3	RB401	*G2																		
R918	E3	R1208	*B3	RB402	*G2																		
R919	*F3	R1209	*A3	RB500	J2																		
R920	*G1	R1210	*B3	RB501	J1																		
R921	*G1	R1211	*B3	RB502	J2																		
R922	F3	R1212	*B3	RB503	J2																		
R923	*G2	R1213	*A3	RB504	J2																		
R924	F2	R1214	*A3	RB506	J1																		
R925	G3	R1215	*A3	RB600	K2																		
R926	G3	R1216	*A3	RB601	K2																		
R927	*G2	R1217	*A2	RB700	E4																		
R928	G2	R1218	*B2	RB701	E4																		
R929	*F2	R1219	*C2	RB703	*H5																		
R930	*F3	R1220	*C2	RB710	E4																		
R931	G2	R1221	*C2	RB711	D3																		
R1101	M3	R1222	*A1	RB712	*D4																		
R1102	M3	R1223	*A1	RB713	*D4																		
R1103	*M3	R1224	A1	RB714	D3																		
R1104	*M2	R1225	A1	RB715	E4																		
R1105	*M3	R1226	*A1	RB717	*D4																		
R1106	*M3	R1227	*C2	RB718	*D5																		
R1107	*M3	R1228	*A2	RB719	E4																		
R1108	*M3	R1229	*B1	RB720	*L5																		
R1109	*L3	R1230	*A2	RB721	E5																		
R1110	*L3	R1231	*A1	RB722	L5																		
R1111	*L3	R1232	*B2	RB723	*D3																		
R1112	E3	R1233	*B1	RB724	D3																		
R1113	E3	R1234	*B2	RB800	F3																		
R1114	M2	R1235	*B1	RB801	F4																		
R1115	L2	R1236	*C2	RB802	F3																		
R1116	L4	R1237	*C2	RB803	F4																		
R1117	*L3	R1238	*C2	RB804	G4																		
R1118	*M3	R1239	*B2	RB805	F4																		
R1119	*M3	R1240	*B2	RB806	F4																		
R1120	*M3	R1241	*B2	RB809	F4																		
R1121	*M3	R1301	D2	RB810	*E3																		
R1122	*L4	R1302	D2	RB811	*F3																		
R1123	*L4	R1303	D2	RB901	*G1																		
R1124	*M4	R1304	C2	RB1101	E3																		
R1125	*M4	R1305	C2	RB1102	E3																		
R1126	L5	R1306	C2	RB1103	E3																		
R1127	L5	R1307	C2	RB1104	*L2																		
R1128	L4	R1308	C2	RB1201	E3																		
R1129	L4	R1309	C1	RB1202	E3																		
R1130	L4	R1310	C1	RB1203	E3																		
R1131	L4	R1311	*D2																				
R1132	L4	R1312	*D1	TP200	E2																		
R1133	L4	R1313	*D1	TP201	E2																		
R1134	M5	R1314	*D1	TP300	J3																		
R1135	M5	R1315	*D1	TP301	J3																		
R1136	M5	R1316	*D1	TP302	J4																		
R1137	L5	R1317	*D1	TP500	K2																		
R1138	M5	R1318	*D1	TP501	J2																		
R1139	M5	R1319	*D1	TP600	J1																		
R1140	*M4	R1320	*D1	TP700	L4																		
R1141	*M3	R1321	*D1	TP701	L4																		
R1142	*M2			TP702	K4																		
R1143	*M2	RB100	C4	TP703	D4																		
R1144	*M3	RB101	C4	TP704	E4																		
R1145	*M2	RB102	B4																				
R1146	*M2	RB103	*B4	X300	*K4																		
R1147	*L2	RB104	*C3	X301	*K4																		
R1148	*L2	RB105	*C3	X1101	*L4																		
R1149	*L2	RB106	C3	X1102	*L4																		
R1150	*M4	RB107	C4	X1301	C1																		
R1151	M4	RB108	*C3																				
R1152	M5	RB109	*C3	*:B SIDE																			
R1153	*M3	RB110	*C3																				
R1154	*M3	RB111	*C3																				
R1155	*M3	RB112	C3																				
R1156	*M3	RB113	*B4																				
R1157	*M3	RB114	*B4																				
R1158	*M3	RB115	*C4																				
R1159	*M4	RB116	*C4																				
R1160	*M4	RB117	B4																				
R1161	M4	RB118	*C4																				
R1162	*M3	RB119	C4																				
R1163	*M3	RB120	C4																				
R1164	*M3	RB121	*B4																				
R1165	*M3	RB122	C4																				
R1166	*M3	RB123	*C3																				
R1167	*M3	RB124	*C3																				
R1168	*M3	RB200	E2																				
R1169	*M3	RB201	E2																				
R1170	*M3	RB203	E3																				

EPR-1
SUFFIX: -17

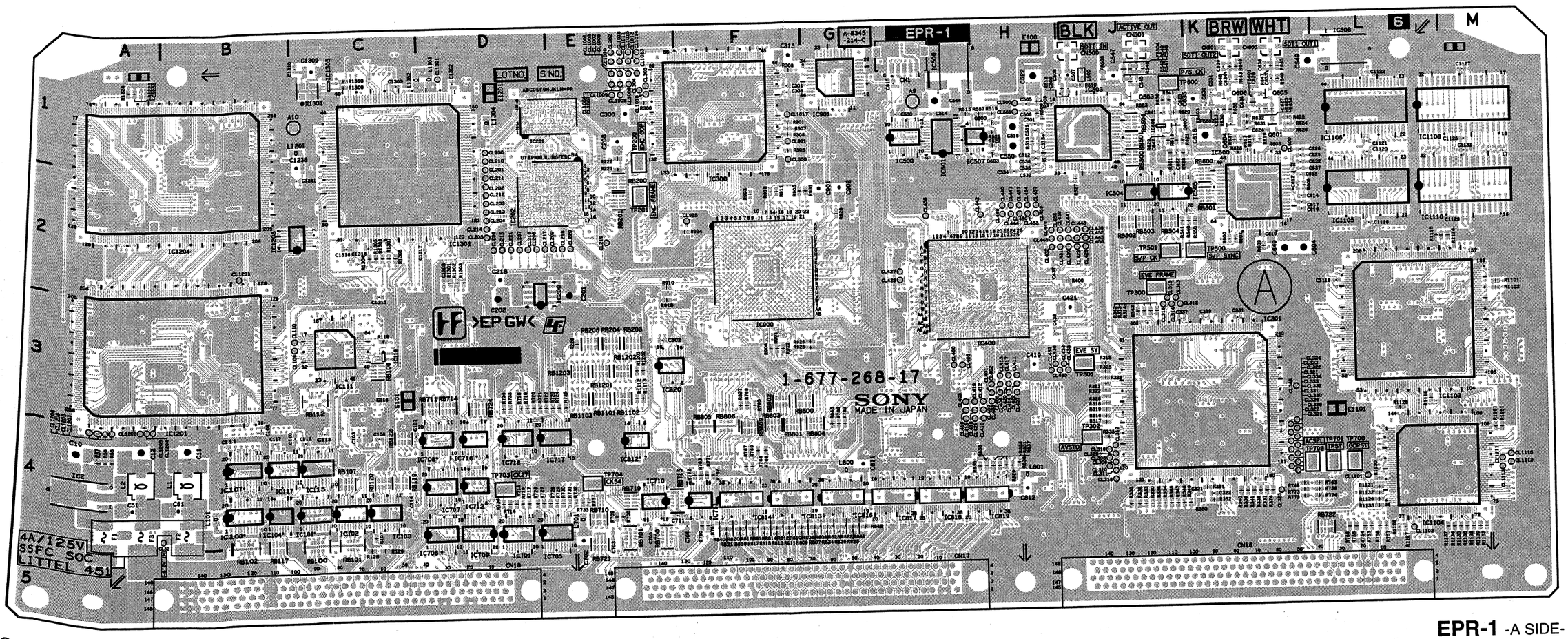

EPR-1 -A SIDE-
SUFFIX: -17

Components locations list; previous page

4-40 (d)

EPR-1
SUFFIX: -17

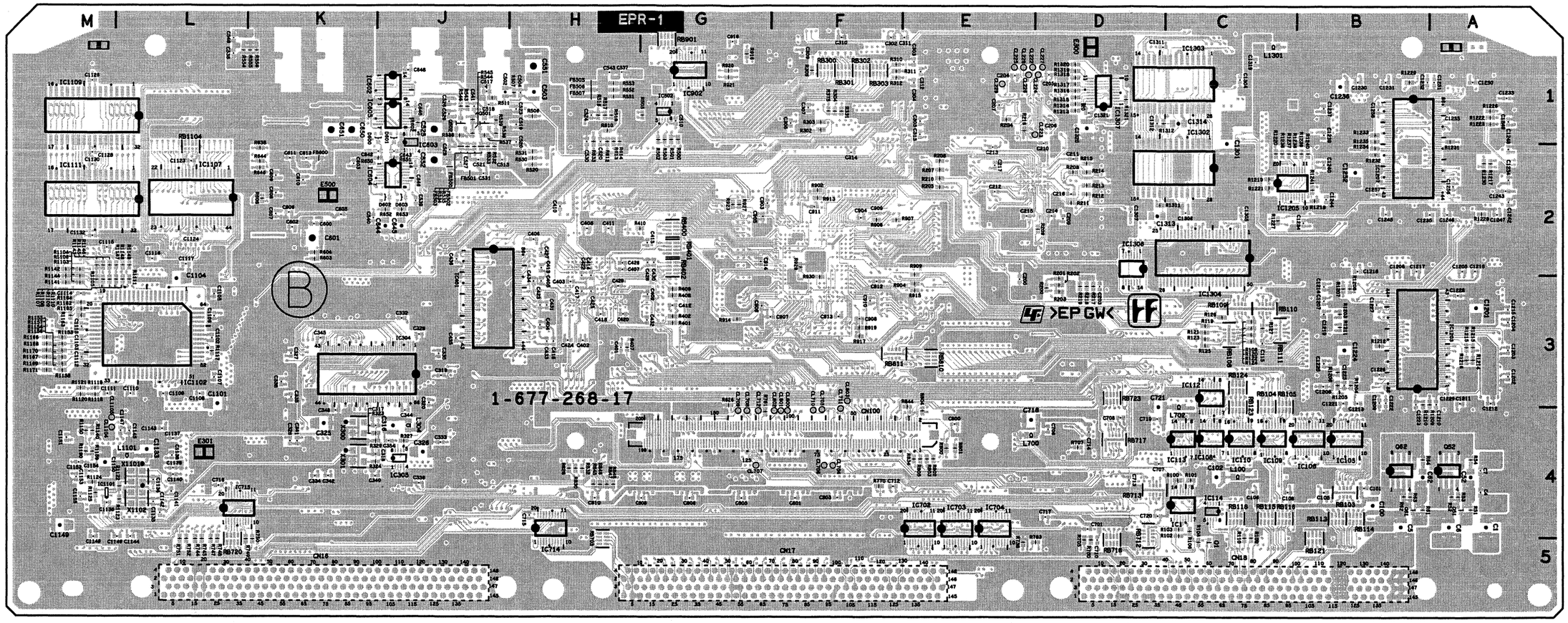

EPR-1 -B SIDE-
SUFFIX: -17

4-41 (d)

EPR-1 (1-677-268-16)

A9	G1	C342	*K4	C550	H1	C909	*F2	C1230	*B1	CL311	J4	CL711	*F4	IC106	*C4	L101	B4	R305	F1	R546	*J1	R743	K4	R911	F2	R1202	E3	RB300	*F1
A10	C1	C344	*J4	C551	*H1	C910	*F3	C1231	*B1	CL312	J3	CL712	*G4	IC107	B4	L304	*J4	R306	F1	R547	J1	R744	*L5	R912	F2	R1203	*B3	RB301	*F1
		C345	*K3	C552	*J2	C911	*F2	C1232	*B1	CL313	J3	CL800	*F4	IC108	*C4	L500	J1	R307	F1	R548	J1	R745	*L5	R913	*F2	R1204	*B3	RB302	*F1
C1	*A4	C346	*K4	C600	*K2	C912	*F3	C1233	*A1	CL314	J3	CL801	*F4	IC109	*C4	L700	*E4	R308	F1	R549	J1	R746	K4	R914	*G3	R1205	*B3	RB303	*F1
C4	*A4	C354	*J4	C601	*K2	C913	*F3	C1234	*A2	CL315	J3	CL802	*F4	IC110	*C4	L701	E4	R309	*F1	R550	K2	R747	*L5	R915	*E3	R1206	*B3	RB400	*G2
C5	*B4	C401	*H3	C602	*K2	C914	*G2	C1235	*A2	CL316	J3	CL803	*F3	IC111	C3	L702	*C3	R310	*F1	R551	*H1	R748	*L5	R916	*G1	R1207	*B3	RB401	*G2
C6	*A4	C402	*H3	C603	*K2	C915	G1	C1236	*B1	CL317	J4	CL925	F2	IC112	*C4	L800	G4	R311	*F1	R552	*H1	R749	*L5	R917	*F3	R1208	*B3	RB402	*G2
C7	*A4	C403	*H3	C604	K2	C916	*G1	C1237	*B1	CL318	J4	CL1001	E1	IC113	*C4	L801	H4	R312	*F1	R553	*H1	R750	*K5	R918	E3	R1209	*A3	RB500	J2
C10	A4	C404	*H3	C605	*K2	C1101	*L3	C1238	C2	CL319	J4	CL1002	E1	IC114	*C4	L1101	*L4	R314	J3	R554	*L1	R751	*L5	R919	*F3	R1210	*B3	RB501	J1
C11	B4	C405	*H3	C606	*K2	C1102	*L3	C1239	*B1	CL320	J4	CL1003	E1	IC115	C4	L1201	C1	R315	J3	R555	*K1	R752	*L5	R920	*G1	R1211	*B3	RB502	J2
C12	A4	C406	*H2	C607	*K2	C1103	*M3	C1240	*B2	CL321	K4	CL1004	E1	IC116	C3	L1301	*C1	R316	J4	R556	*K1	R753	L5	R921	*G1	R1212	*B3	RB503	J2
C51	A4	C407	*H2	C608	*K2	C1104	*L3	C1241	C2	CL322	K4	CL1005	E1	IC117	B4	L1302	C1	R317	J4	R557	H1	R754	L5	R922	F3	R1213	*A3	RB504	J2
C52	*A4	C408	*H2	C609	*K2	C1105	*L3	C1242	*A2	CL323	K4	CL1006	E1	IC200	E3	L1303	D1	R318	J3	R600	K2	R755	L5	R923	*G2	R1214	*A3	RB506	J1
C61	B4	C409	*G3	C610	*K2	C1106	*L3	C1243	*A2	CL324	K4	CL1007	E1	IC201	E1	L1304	D1	R319	J4	R601	K2	R756	L5	R924	F2	R1215	*A3	RB600	K2
C62	*B4	C410	*H2	C611	*K2	C1107	*L3	C1244	*B2	CL325	K4	CL1008	E1	IC202	E2			R320	J4	R602	*J1	R757	L5	R925	G3	R1216	*A3	RB601	K2
C100	*B4	C411	*H2	C612	K2	C1108	*L3	C1245	*B2	CL326	K4	CL1009	E1	IC300	F1	Q1	*C5	R321	J3	R603	*K2	R758	L5	R926	G3	R1217	*A2	RB700	E4
C101	*B4	C412	*G3	C613	*K2	C1109	*L3	C1246	*A2	CL327	K4	CL1010	E1	IC301	K3	Q51	*A4	R322	J3	R604	*K2	R759	K4	R927	*G2	R1218	*B2	RB701	E4
C102	*C4	C413	*H2	C614	K2	C1110	*L3	C1247	*A2	CL328	K4	CL1011	E1	IC304	*J3	Q52	*A4	R323	*K4	R605	K2	R760	F4	R928	G2	R1219	*C2	RB703	*H5
C103	C4	C414	*H3	C615	K2	C1111	*M3	C1248	*A2	CL329	K4	CL1012	E1	IC305	*J4	Q61	*B4	R324	*K4	R606	*K2	R761	F4	R929	*F2	R1220	*C2	RB710	E4
C104	C4	C415	*G2	C616	K2	C1112	*M3	C1249	*A1	CL330	K4	CL1013	E1	IC400	H3	Q62	*B4	R325	J3	R608	K2	R762	F4	R930	*F3	R1221	*C2	RB711	D3
C105	*B4	C416	*H3	C617	K2	C1113	*M3	C1250	*A1	CL331	K4	CL1014	E1	IC401	*J2	Q500	H1	R326	J3	R609	K2	R763	F4	R1101	M3	R1222	*A1	RB712	*D4
C106	*C4	C417	*H3	C618	K1	C1114	*M3	C1251	*A1	CL332	K4	CL1015	E1	IC500	G1	Q501	*J1	R327	*J4	R610	*H1	R764	F4	R1102	M3	R1223	*A1	RB713	*D4
C107	C4	C418	*H3	C619	K2	C1115	*M2	C1252	*B2	CL333	K4	CL1016	E1	IC501	H1	Q502	*J1	R328	J3	R611	J2	R765	F3	R1103	*M3	R1224	A1	RB714	D3
C108	*C4	C419	H3	C620	*H1	C1116	*L2	C1253	A1	CL334	K4	CL1017	F1	IC502	*G1	Q503	J1	R329	*K4	R612	*H1	R766	F4	R1104	*M2	R1225	A1	RB715	E4
C109	B4	C420	*H3	C622	J2	C1117	*L2	C1254	*B2	CL346	K3	CL1018	E1	IC503	J1	Q600	J1	R330	J4	R613	*H1	R767	F4	R1105	*M3	R1226	*A1	RB717	*D4
C110	C4	C421	J3	C623	K1	C1118	L3	C1255	*A1	CL400	H3	CL1101	L4	IC504	J2	Q601	K1	R331	*F1	R614	*H1	R768	F3	R1106	*M3	R1227	*C2	RB718	*D5
C111	B4	C422	*H3	C624	K1	C1119	L2	C1256	*A2	CL401	H3	CL1102	L5	IC505	J2	Q603	H2	R332	J4	R615	J1	R769	F4	R1107	*M3	R1228	*A2	RB719	E4
C112	C4	C423	*H3	C625	J1	C1120	L2	C1257	*B2	CL402	H3	CL1104	*M4	IC506	H1	Q604	K1	R333	J4	R616	K2	R770	*F4	R1108	*M3	R1229	*B1	RB720	*L5
C113	C4	C424	*H3	C626	K2	C1121	L1	C1258	*B1	CL403	H3	CL1105	*M4	IC507	H1	Q605	K1	R334	J4	R617	K1	R771	F4	R1109	*L3	R1230	*A2	RB721	E5
C114	C4	C425	*H3	C627	K1	C1122	L1	C1301	*C1	CL404	H3	CL1110	M4	IC508	L1	Q606	K1	R335	J4	R618	K1	R772	F4	R1110	*L3	R1231	*A1	RB722	L5
C115	*C3	C426	*H2	C628	K1	C1123	*L2	C1302	D1	CL405	H3	CL1111	M4	IC600	K2			R336	J4	R619	K1	R773	K4	R1111	*L3	R1232	*B2	RB723	*D3
C116	C3	C427	*H2	C629	K2	C1124	*L2	C1303	C1	CL406	H3	CL1112	M4	IC602	*J1	R51	*A4	R337	K4	R620	J1	R774	K4	R1112	E3	R1233	*B1	RB724	D3
C117	B4	C428	*G2	C630	K1	C1125	M1	C1304	*C1	CL407	H3	CL1113	M4	IC603	*J1	R52	*A4	R338	K4	R621	J1	R775	K4	R1113	E3	R1234	*B2	RB800	F3
C200	*B3	C429	*H3	C631	K1	C1126	*M1	C1305	*C2	CL408	H3	CL1201	B2	IC604	*J2	R53	*A4	R339	K4	R623	K1	R780	G4	R1114	M2	R1235	*B1	RB801	F4
C201	E3	C430	*G2	C632	K2	C1127	M1	C1306	*C2	CL409	H4	CL1202	A4	IC605	*J1	R54	*A4	R340	K4	R624	K1	R781	*G4	R1115	L2	R1236	*C2	RB802	F3
C202	D3	C431	*H3	C633	K1	C1128	*M2	C1307	*D2	CL410	H4	CL1203	A4	IC606	J1	R55	A4	R341	K4	R625	K1	R782	G4	R1116	L4	R1237	*C2	RB803	F4
C203	*D3	C432	*G3	C634	K1	C1129	M2	C1308	D2	CL411	H3	CL1204	A4	IC701	D5	R56	A4	R342	J3	R626	K1	R783	*D5	R1117	*L3	R1238	*C2	RB804	G4
C204	*E1	C433	*H3	C635	K1	C1130	*M2	C1309	C1	CL412	H3	CL1205	A4	IC702	*E5	R57	A4	R343	J3	R627	H1	R800	*E4	R1118	*M3	R1239	*B2	RB805	F4
C205	*D1	C434	*H3	C636	K1	C1131	M2	C1310	C1	CL413	H3	CL1206	A4	IC703	*E5	R61	*B4	R346	J4	R628	J2	R801	*E4	R1119	*M3	R1240	*B2	RB806	F4
C206	*D1	C435	*J3	C637	K2	C1132	*M2	C1311	*D1	CL414	H3	CL1207	A4	IC704	*E5	R62	*B4	R347	J4	R629	J1	R802	*E4	R1120	*M3	R1241	*B2	RB809	F4
C207	*E1	C436	*J2	C638	K1	C1133	*L4	C1312	*D1	CL415	H4	CL1208	A4	IC705	D5	R63	*B4	R348	J4	R630	K1	R803	*E4	R1121	*M3	R1301	D2	RB810	*E3
C208	E1	C437	H2	C639	K1	C1134	*L4	C1313	*D2	CL416	H4	CL1301	D1	IC706	D5	R64	*B4	R349	J4	R631	K1	R804	*E4	R1122	*L4	R1302	D2	RB811	*F3
C209	*D2	C438	H3	C640	*J1	C1135	*L4	C1314	*C1	CL417	H3			IC707	D4	R100	*C4	R350	K4	R632	K1	R805	*E4	R1123	*L4	R1303	D2	RB901	*G1
C210	*D1	C500	G1	C641	J1	C1136	*M4	C1315	C3	CL418	H4	CN1	G1	IC708	D4	R101	*C4	R351	K4	R633	*H1	R806	G4	R1124	*M4	R1304	C2	RB1101	E3
C211	*D2	C501	H1	C642	*J2	C1137	*L4	C1316	C2	CL419	H3	CN16	K5	IC709	D4	R102	*C4	R352	K4	R634	K1	R807	G4	R1125	*M4	R1305	C2	RB1102	E3
C212	*E2	C502	*J1	C643	*J2	C1138	*L4	C1317	D2	CL420	H3	CN17	F5	IC710	E4	R103	*C4	R373	J3	R635	K1	R808	F4	R1126	L5	R1306	C2	RB1103	E3
C213	*E2	C503	*H1	C644	*J2	C1139	*L4	C1318	C2	CL421	H4	CN18	C5	IC711	F4	R104	*C5	R374	K4	R637	K1	R809	F4	R1127	L5	R1307	C2	RB1104	*L2
C214	*D2	C504	*H1	C645	*J2	C1140	*L4	C1319	*C1	CL422	H3	CN100	*F4	IC712	D4	R106	*C4	R375	*F1	R638	*K2	R810	F4	R1128	L4	R1308	C2	RB1201	E3
C215	*E2	C505	H1	C646	*J2	C1141	*L4	C1320	*D1	CL426	G2	CN500	J1	IC714	*H5	R107	C4	R400	J3	R639	J1	R811	F4	R1129	L4	R1309	C1	RB1202	E3
C216	*D2	C506	H1	C647	J1	C1142	*L4	C1321	*D1	CL427	G2	CN501	J1	IC715	*L4	R108	*C3	R401	*G3	R640	K1	R812	F4	R1130	L4	R1310	C1	RB1203	E3
C217	*E2	C507	J1	C648	*J1	C1143	*L4			CL428	J2	CN600	K1	IC716	D4	R109	*C4	R402	*G3	R641	J1	R813	F4	R1131	L4	R1311	*D2		
C218	D2	C508	J1	C649	K2	C1144	*L4	CL52	B4	CL429	J2	CN601	K1	IC717	D4	R110	*C4	R407	*H3	R643	K1	R814	F4	R1132	L4	R1312	*D1	TP200	E2
C300	E1	C509	J1	C650	*K1	C1145	*L4	CL109	C3	CL430	J2			IC718	D4	R118	C3	R408	*G3	R644	*K2	R815	F4	R1133	L4	R1313	*D1	TP201	E2
C301	F1	C510	*G1	C651	*K1	C1146	*L4	CL110	C3	CL431	H2	D600	*J1	IC812	E4	R119	*C3	R409	*G3	R645	K1	R816	F4	R1134	M5	R1314	*D1	TP300	J3
C302	*F1	C511	H1	C701	*D4	C1147	*L4	CL200	D1	CL432	H2	D601	*J1	IC813	F4	R120	*C3	R410	*H2	R646	*K2	R817	F4	R1135	M5	R1315	*D1	TP301	J3
C303	*E1	C512	H2	C702	E4	C1148	*M4	CL201	D2	CL433	J3	D602	*J2	IC814	F4	R121	*C3	R500	*G1	R647	K1	R818	F4	R1136	M5	R1316	*D1	TP302	J4
C304	*E1	C513	*J2	C703	E4	C1149	*M4	CL202	D2	CL434	J3	D603	*J2	IC816	G4	R122	*C3	R501	*G1	R648	K1	R819	F4	R1137	L5	R1317	*D1	TP500	K2
C305	*E1	C514	G1	C704	F4	C1150	*M4	CL203	D2	CL435	H3			IC817	G4	R123	*C3	R502	*G1	R649	K1	R820	F4	R1138	M5	R1318	*D1	TP501	J2
C306	*F1	C515	H1	C705	E4	C1151	*M4	CL204	D2	CL436	H3	E101	C3	IC818	H4	R124	*C3	R503	*G1	R650	*J2	R821	F4	R1139	M5	R1319	*D1	TP600	J1
C307	*F1	C516	H1	C706	*D4	C1152	*M4	CL205	D2	CL437	H3	E300	*D1	IC819	H4	R125	*C3	R505	*G1	R651	*J2	R822	G4	R1140	*M4	R1320	*D1	TP700	L4
C308	F1	C517	*J1	C707	*D4	C1153	*M4	CL206	D2	CL438	G2	E301	*L4	IC820	E3	R126	*C3	R506	*H1	R652	*J2	R823	G4	R1141	*M3	R1321	*D1	TP701	L4
C309	*F1	C518	*J1	C708	*D4	C1154	*M4	CL207	D2	CL439	J2	E500	*K2	IC900	F2	R127	*C3	R507	*H1	R653	*J2	R824	G4	R1142	*M2			TP702	K4
C310	*F1	C519	*H1	C710	*D5	C1155	*M4	CL208	D2	CL440	H2	E600	H1	IC901	G1	R128	C5	R508	H1	R700	*D5	R825	G4	R1143	*M2	RB100	C4	TP703	D4
C311	*E1	C520	*H1	C711	E4	C1201	*A3	CL209	E2	CL441	J2	E1101	L4	IC902	*G1	R129	C5	R509	H1	R705	*D5	R826	*G3	R1144	*M3	RB101	C4	TP704	E4
C312	*E1	C521	*J2	C712	*F4	C1202	*A3	CL210	D1	CL442	H2	E1201	D1	IC1101	*M4	R200	*D3	R510	J1	R707	*D4	R827	F3	R1145	*M2	RB102	B4		
C313	*E1	C522	H1	C713	*D4	C1203	*A3	CL211	D2	CL443	J2			IC1102	*L3	R201	*D3	R511	*J1	R708	E4	R828	*H4	R1146	*M2	RB103	*B4	X300	*K4
C314	*F2	C523	*H1	C714	*D4	C1204	*A3	CL212	D2	CL444	H2	F1	A4	IC1103	L3	R202	*D3	R512	J1	R709	E4	R829	H4	R1147	*L2	RB104	*C3	X301	*K4
C315	F1	C524	*H1	C715	*H4	C1205	*A2	CL213	D2	CL445	J2	F2	B4	IC1104	L4	R203	*D3	R513	H1	R714	D4	R830	*H4	R1148	*L2	RB105	*C3	X1101	*L4
C316	*J4	C525	*J1	C716	*L4	C1206	*B2	CL214	D2	CL446	H2	F3	A4	IC1105	L2	R204	*E1	R515	H1	R715	D4	R831	H4	R1149	*L2	RB106	C3	X1102	*L4
C317	*K4	C526	*J1	C717	*D4	C1207	*B3	CL215	D2	CL447	H2			IC1106	L1	R205	*E2	R516	*H1	R716	D4	R832	*H4	R1150	*M4	RB107	C4	X1301	C1
C318	*K4	C527	*J2	C718	*E4	C1208	*B3	CL216	D2	CL448	H2	FB500	*J2	IC1107	*L2	R206	*E2	R517	*H1	R717	D4	R833	H4	R1151	M4	RB108	*C3		
C319	*J3	C528	*J2	C719	*D4	C1209	*B3	CL217	D2	CL449	H2	FB501	*J2	IC1108	L1	R207	*E2	R518	*H1	R718	D3	R834	*E4	R1152	M5	RB109	*C3	*:B SIDE	
C320	*J3	C529	*J1	C720	*D4	C1210	*A3	CL218	E2	CL450	H2	FB502	*J2	IC1109	*L1	R208	*D2	R519	H1	R719	D3	R835	H4	R1153	*M3	RB110	*C3		
C321	K4	C530	*H1	C721	*D3	C1211	*A3	CL219	E2	CL451	H2	FB503	*J2	IC1110	L2	R209	*D2	R520	*H2	R720	D3	R836	H4	R1154	*M3	RB111	*C3		
C322	K4	C531	*J2	C800	*E4	C1212	*A3	CL220	E2	CL452	J2	FB504	J1	IC1111	*L2	R210	*E2	R521	H1	R721	D3	R837	H4	R1155	*M3	RB112	C3		
C325	*K4	C532	H2	C801	*F4	C1213	*B3	CL221	D2	CL453	H2	FB505	*H1	IC1201	B3	R211	*D2	R523	J1	R722	D3	R838	H4	R1156	*M3	RB113	*B4		
C326	*J4	C534	H2	C802	E3	C1214	*B3	CL222	*E1	CL454	H2	FB506	*H1	IC1203	*A3	R212	*D2	R527	J2	R723	D3	R839	G4	R1157	*M3	RB114	*B4		
C327	*K3	C535	H2	C803	*F4	C1215	*A3	CL223	*E1	CL455	J2	FB507	*H1	IC1204	B2	R213	*D2	R530	*H2	R724	E3	R840	F4	R1158	*M3	RB115	*C4		
C328	*K4	C536	H2	C805	*G4	C1216	*A2	CL224	*D1	CL456	H2	FB508	J1	IC1205	*C2	R214	*D2	R531	*H2	R725	E3	R841	G4	R1159	*M4	RB116	*C4		
C329	*J3	C537	*H1	C806	*G4	C1217	*B2	CL225	*E1	CL457	H2	FB600	*K2	IC1207	*B1	R215	*D2	R532	*J2	R726	D4	R842	G4	R1160	*M4	RB117	B4		
C330	*J3	C538	*L1	C808	*G4	C1218	*B2	CL226	*E1	CL458	H2	FB601	K1	IC1208	C2	R216	*E1	R533	*J2	R727	D4	R843	G4	R1161	M4	RB118	*C4		
C331	K3	C539	*J2	C810	*H4	C1219	*B3	CL227	*D1	CL459	H2	FB602	K1	IC1301	C2	R217	*D3	R534	*J2	R728	D4	R844	*E3	R1162	*M3	RB119	C4		
C332	*J3	C540	*K2	C811	G4	C1220	*B3	CL228	*E1	CL500	H1	FB603	K1	IC1302	*C1	R218	*D3	R535	*J2	R729	E4	R901	F3	R1163	*M3	RB120	C4		
C333	*J4	C541	*J1	C812	H4	C1221	*B3	CL229	*E1	CL501	H1			IC1303	*C1	R219	*D3	R536	*J1	R730	E4	R902	*F2	R1164	*M3	RB121	*B4		
C334	*K4	C542	J1	C901	G2	C1222	*B3	CL300	F2	CL600	K2	IC1	*C4	IC1304	*C2	R220	E3	R537	*J1	R731	E4	R903	F2	R1165	*M3	RB122	C4		
C335	*K3	C543	*H1	C902	G2	C1223	*B3	CL301	F1	CL704	*F4	IC2	A4	IC1305	C1	R221	E2	R538	*J1	R732	E4	R904	*E3	R1166	*M3	RB123	*C3		
C336	*J4	C544	H1	C903	*G2	C1224	*B3	CL302	E1	CL705	*F4	IC100	B4	IC1306	*D2	R222	E1	R539	*J1	R733	E4	R905	G2	R1167	*M3	RB124	*C3		
C337	J3	C545	J1	C904	*F2	C1225	*B3	CL303	E1	CL706	*F4	IC101	C4	IC1307	*D1	R300	E1	R540	K2	R734	D3	R906	*F2	R1168	*M3	RB200	E2		
C338	*K3	C546	J1	C905	*G2	C1226	*B3	CL304	E1	CL707	*G4	IC102	C4			R301	F1	R541	J2	R735	D3	R907	*F2	R1169	*M3	RB201	E2		
C339	K3	C547	J1	C906	*G3	C1227	*B3	CL308	J4	CL708	*G4	IC103	C4	L1	B4	R302	*F1	R543	*J1	R736	D4	R908	F3	R1170	*M3	RB203	E3		
C340	*K4	C548	*L1	C907	*G3	C1228	*A3	CL309	J4	CL709	*G4	IC104	B4	L2	A4	R303	*F1	R544	*J1	R737	E4	R909	*E2	R1171	*M3	RB204	E3		
C341	*K4	C549	K1	C908	*F3	C1229	*A3	CL310	J4	CL710	*F4	IC105	*B4	L100	*C4	R304	*F1	R545	*J1	R738	*E5	R910	E3	R1201	E3	RB205	E3		

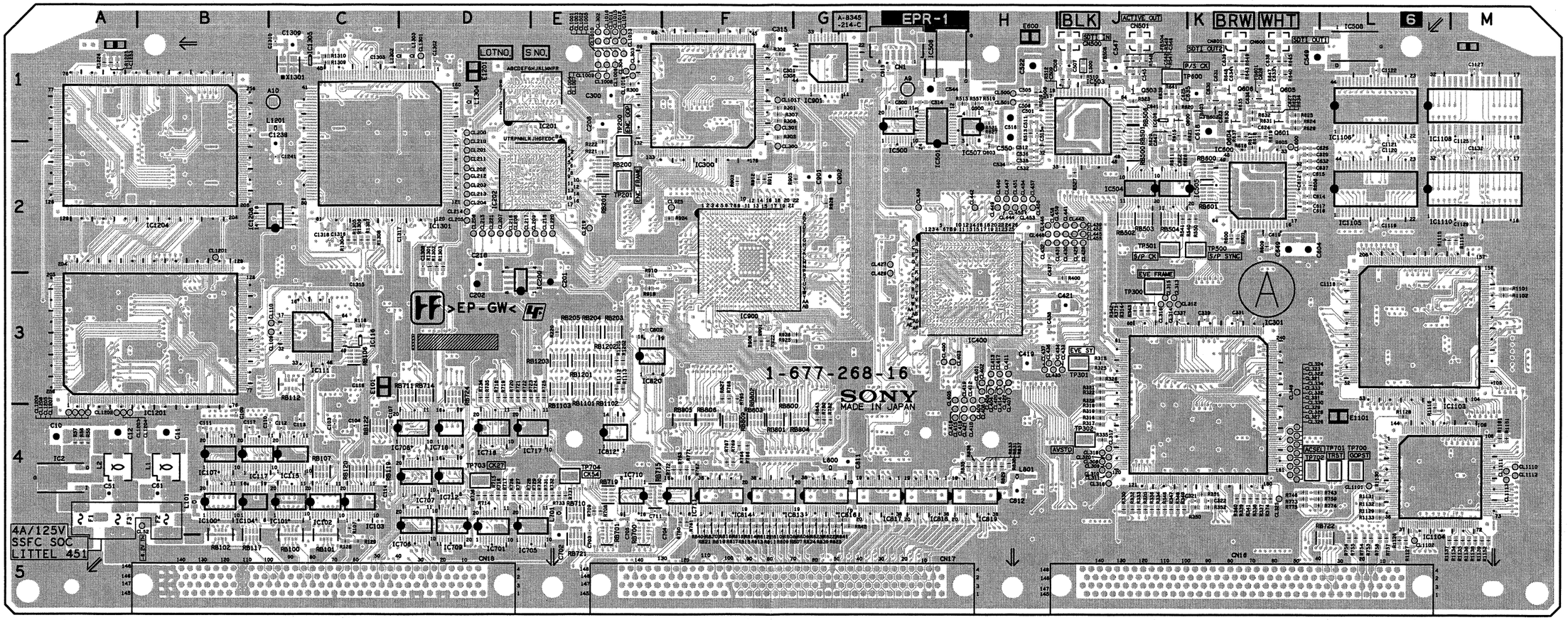

Components locations list; previous page

EPR-1 -A SIDE-
SUFFIX: -16

EPR-1
SUFFIX: -16

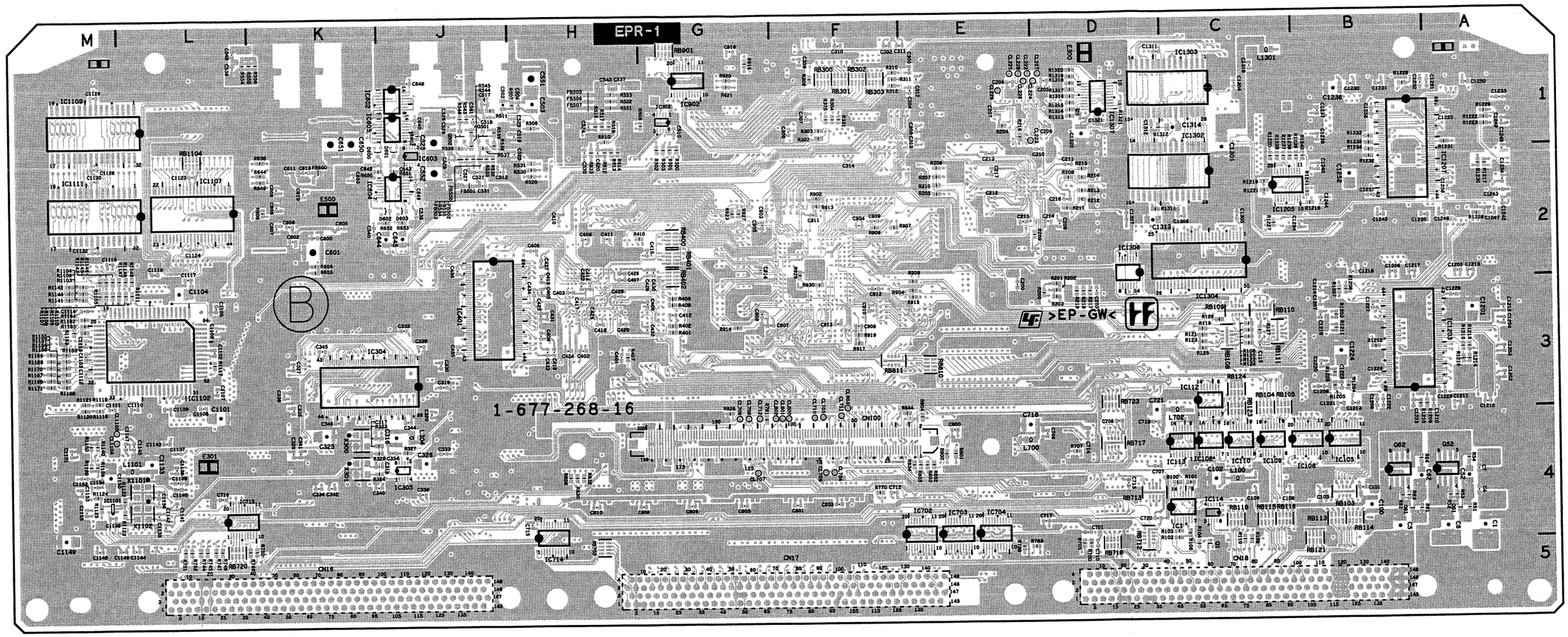

EPR-1 -B SIDE-
SUFFIX: -16

4-41 (c)

EPR-1 (1-677-268-15)

A9	H1	C402	*J2	C552	*L2	C913	*F2	CL354	J4	CL455	H1	IC102	C4	Q605	M2	R332	*K3	R609	M3	R803	*E4	RB500	L2
A10	B1	C403	*J2	C600	*L3	C914	*F2	CL355	J4	CL456	H1	IC103	C4	Q606	L2	R333	*K3	R610	*K3	R804	*E4	RB501	L2
		C404	*J1	C601	*L3	C915	*E1	CL356	J4	CL457	H1	IC104	B4			R334	*K3	R611	*L2	R805	*E4	RB502	K3
C1	A4	C405	*J2	C602	*M3	C916	*E2	CL357	J4	CL458	H1	IC105	B3	R51	B3	R335	*L3	R612	*K3	R806	*H4	RB503	L3
C4	*A4	C406	*J2	C603	*L2			CL358	J4	CL459	H1	IC106	B4	R52	B3	R336	*K3	R613	*K3	R807	*H4	RB504	L3
C5	A4	C407	*J2	C604	M2	CL52	B3	CL359	J4	CL460	H2	IC107	B3	R53	B3	R337	K3	R614	*K3	R808	*H4	RB506	L2
C6	B4	C408	*J2	C605	*L2	CL109	C3	CL360	J4	CL461	H2	IC109	C4	R54	B2	R338	K3	R615	*L2	R809	*G4	RB600	L2
C7	A3	C409	*J2	C606	*M2	CL110	C3	CL361	J4	CL462	H2	IC111	C3	R55	A3	R339	K3	R616	L2	R810	*G4	RB601	L2
C10	A3	C410	*J1	C607	*M2	CL200	C1	CL362	J4	CL500	K2	IC112	C3	R56	A3	R340	K3	R617	L2	R811	*G4	RB700	F5
C11	A3	C411	*J2	C608	*M2	CL201	C1	CL363	J4	CL501	K2	IC113	C3	R57	A3	R341	K3	R618	M2	R812	*G4	RB701	F5
C12	B3	C412	*J2	C609	*M2	CL202	C2	CL364	J4	CL600	M2	IC114	C4	R61	A3	R346	*K3	R619	M2	R813	*G4	RB704	F4
C51	A3	C413	*J1	C610	*M2	CL203	C2	CL365	J5	CL704	F4	IC115	C4	R62	A3	R347	*K3	R620	*L2	R814	*G4	RB705	F4
C52	B3	C414	*J1	C611	*M2	CL204	C2	CL366	K4	CL705	F4	IC200	C3	R63	A3	R348	*K3	R621	*L2	R815	*G4	RB708	F4
C61	A3	C415	*J2	C612	M2	CL205	C2	CL367	K5	CL706	F4	IC201	C1	R64	A2	R349	*K3	R623	M2	R816	*G4	RB709	F4
C62	A3	C416	*J1	C613	*M2	CL206	C2	CL368	K4	CL707	G4	IC202	C2	R100	*D4	R350	*K3	R624	M2	R817	*G4	RB710	*F4
C100	B3	C417	*J1	C614	M2	CL207	C2	CL369	K5	CL708	G4	IC300	H3	R101	*D4	R351	*K3	R625	M2	R818	*G4	RB711	*C4
C101	*B4	C418	*J2	C615	M2	CL208	C2	CL370	K4	CL709	G4	IC301	K4	R102	*D4	R352	*K3	R626	M2	R819	*G4	RB712	*D4
C102	C4	C419	H1	C616	M2	CL209	C2	CL371	K5	CL710	F4	IC304	*K4	R103	*D4	R353	*K3	R627	*K2	R820	*G4	RB713	*C4
C105	*B4	C420	*K1	C617	M2	CL210	C1	CL372	K4	CL711	F4	IC305	L4	R104	*C5	R354	*K3	R628	*L2	R821	*G4	RB715	G4
C106	*C4	C421	H1	C618	L2	CL211	C2	CL373	K5	CL712	G4	IC400	J2	R105	C4	R355	*K3	R629	*L2	R822	*H4	RB717	*E4
C108	*C4	C422	*J1	C619	M3	CL212	C2	CL374	K4	CL800	G3	IC401	*J1	R106	*D4	R356	*K3	R630	L2	R823	*H4	RB718	*E4
C109	*B3	C423	*J1	C620	*K3	CL213	C2	CL375	K5	CL801	G3	IC402	J1	R107	C4	R357	*K3	R631	L2	R824	*H4	RB719	F4
C110	*B4	C424	*J2	C622	*L2	CL214	C2	CL376	K4	CL802	G4	IC403	*H4	R108	*C3	R358	*K3	R632	L2	R825	*H4	RB720	L5
C111	*B3	C425	*J1	C623	L2	CL215	C2	CL377	K5	CL803	F4	IC404	*G4	R109	*C4	R373	*K5	R633	*K2	R827	F3	RB721	E5
C112	*C4	C426	*J2	C624	L2	CL216	C2	CL378	K4	CL922	E2	IC405	H4	R110	*C4	R374	J3	R634	M2	R834	*E4	RB800	G3
C113	*C4	C427	*J1	C625	*L2	CL217	C2	CL379	K5	CL923	E2	IC500	*J3	R111	C4	R375	H3	R635	L2	R835	*J4	RB801	G3
C115	*C3	C428	*J2	C626	M2	CL218	C2	CL380	K4	CL924	E2	IC501	*K3	R112	*C4	R400	J1	R637	L2	R836	*J4	RB802	G3
C116	*C3	C429	*J2	C627	M2	CL219	D2	CL381	K5	CL925	F2	IC502	*J3	R113	*C4	R401	J2	R638	*M2	R837	*J4	RB803	F3
C200	*C3	C430	*J2	C628	M2	CL220	C2	CL382	K4	CL1001	J4	IC503	L2	R114	*D4	R402	J2	R639	*L2	R838	*J4	RB804	G3
C201	D2	C431	*J1	C629	M2	CL221	C2	CL383	K5	CL1002	J4	IC504	L2	R115	*D4	R403	H3	R640	M1	R839	*H4	RB805	F3
C202	C2	C432	*J2	C630	L2	CL222	*C1	CL384	K4	CL1003	J4	IC505	L2	R116	*D4	R404	H3	R641	*L2	R840	*G4	RB806	F3
C203	*C3	C433	*J2	C631	L2	CL223	*C1	CL385	K5	CL1004	J4	IC506	K1	R118	*C3	R405	H3	R643	L1	R841	*H4	RB809	F3
C204	*C1	C434	*J2	C632	M2	CL224	*C1	CL386	K4	CL1005	J4	IC507	*K2	R119	*C4	R406	H3	R644	*M2	R842	*H4	RB810	*D5
C205	*C1	C435	J1	C633	M1	CL225	*C1	CL387	K5	CL1006	J4	IC508	K3	R120	*C3	R407	*K2	R645	M1	R843	G3	RB811	*E4
C206	*C1	C436	J1	C634	L1	CL226	*C1	CL388	K4	CL1007	J4	IC600	L2	R121	*C4	R408	*J2	R646	*M2	R844	*F4	RB901	*E1
C207	*C1	C437	J1	C635	L2	CL227	*C1	CL389	K5	CL1008	J4	IC602	*L3	R122	*C3	R409	*J2	R647	M1	R901	*G2		
C208	D2	C438	J1	C636	L2	CL228	*C1	CL390	K4	CL1009	J4	IC603	*L3	R123	*C4	R500	*J3	R648	L1	R902	*F2	TP200	D2
C209	*C2	C439	J1	C637	M2	CL229	*C1	CL400	K2	CL1010	J4	IC604	*L3	R124	*C3	R501	*J3	R649	L1	R903	*F2	TP201	D2
C210	*C1	C440	*H4	C638	M1	CL300	H3	CL401	K2	CL1011	J4	IC605	*L3	R125	*C4	R502	*J3	R650	*L3	R904	F3	TP300	L5
C211	*C1	C441	H4	C639	L1	CL301	H3	CL402	K2	CL1012	J4	IC606	*L2	R126	D3	R503	*J3	R651	*L3	R905	*F2	TP301	L4
C212	*D2	C442	H4	C640	*L3	CL302	J3	CL403	K2	CL1013	J4	IC701	D4	R127	D3	R505	*K3	R652	*K3	R906	*F2	TP302	L5
C213	*D1	C500	*J3	C641	*L2	CL303	J3	CL404	K2	CL1014	J3	IC702	F4	R200	*C3	R506	*K2	R653	*K3	R907	*F2	TP500	L3
C214	*C2	C501	K2	C642	*L3	CL304	J3	CL405	K2	CL1015	J3	IC703	F4	R201	*C2	R507	*K2	R700	D4	R908	G2	TP501	L3
C215	*C2	C502	*K2	C643	*L3	CL305	J4	CL406	K2	CL1016	J3	IC704	E4	R202	*C2	R508	K2	R705	D4	R909	F3	TP600	L3
C216	*C2	C503	*K2	C644	*K3	CL306	J3	CL407	K1	CL1017	H3	IC705	E3	R203	*C3	R509	K2	R706	E4	R910	F3	TP700	L4
C217	*D2	C504	*K2	C645	*K3	CL307	J3	CL408	K1	CL1018	J3	IC706	D4	R204	*C1	R510	K1	R707	*D4	R911	F2	TP701	L4
C218	C2	C505	K2	C646	*L3	CL308	L3	CL409	K1			IC708	C4	R205	*D2	R511	*K2	R708	*F4	R912	F2	TP702	L4
C300	H3	C506	K2	C647	*L3	CL309	L3	CL410	K1	CN1	E1	IC709	E4	R206	*D2	R512	K1	R709	*F4	R913	F2		
C301	*J3	C507	K1	C648	*L3	CL310	L3	CL411	K2	CN16	K5	IC710	F4	R207	*D2	R513	K2	R714	D4	R914	*G2	X300	L4
C302	*J3	C508	K1	C649	M2	CL311	L3	CL412	K1	CN17	F5	IC711	G4	R208	*C2	R515	*K3	R715	D4	R915	*F2	X301	L4
C303	*J3	C509	K1	C650	*L2	CL312	*K4	CL413	K2	CN18	C5	IC712	D4	R209	*C2	R516	*K3	R716	*D4	R916	*E1		
C304	*J3	C510	*J3	C651	*L2	CL313	K5	CL414	K2	CN100	*F4	IC714	J4	R210	*D2	R517	*K3	R717	*D4	R917	*G2	*:B SIDE	
C305	*H3	C511	K2	C701	*D4	CL314	K4	CL415	K2	CN500	K1	IC715	L4	R211	*C2	R518	*K3	R718	*D4	R918	*G2		
C306	*H3	C512	K2	C702	E4	CL315	K5	CL416	K2	CN501	L1	IC716	D4	R212	*C2	R519	*K2	R719	*D4	R919	*G2		
C307	*H4	C513	*K2	C703	*F4	CL316	K4	CL417	K2	CN600	M1	IC717	D4	R213	*C2	R520	*K2	R720	*D4	R920	E1		
C308	*J4	C514	*K3	C704	*E4	CL317	L4	CL418	K1	CN601	L1	IC718	E4	R214	*C2	R521	*K2	R721	*D4	R921	E1		
C309	*J3	C515	K2	C705	*F4	CL318	L3	CL419	K1			IC812	*E3	R215	*C2	R523	L2	R722	D4	R922	*G2		
C310	*H3	C516	K2	C706	*E3	CL319	L4	CL420	K2	D600	*L3	IC813	H4	R216	*C1	R527	K2	R723	*D4	R924	F2		
C311	*J3	C517	*K2	C707	*D4	CL320	L3	CL421	K1	D601	*L3	IC814	G4	R217	*C3	R530	*K2	R724	*D4	R925	G2		
C312	*J3	C518	*K2	C708	*E4	CL321	J3	CL422	K2	D602	*K3	IC816	H4	R218	*C2	R531	*K2	R725	D4	R926	G2		
C313	*H3	C519	*K2	C709	*C4	CL322	J3	CL423	J2	D603	*K3	IC817	H4	R219	*C2	R532	*K2	R726	E3				
C314	*H3	C520	*K2	C710	*E4	CL323	J4	CL424	J2			IC818	J4	R300	J3	R533	*K2	R727	E3	RB100	C5		
C315	H3	C521	*L2	C711	*F4	CL324	J4	CL425	J2	E200	A2	IC819	J4	R301	H3	R534	*L2	R728	E3	RB101	C5		
C316	M4	C522	K1	C712	*G4	CL325	J3	CL426	H2	E201	E3	IC820	E4	R302	H3	R535	*L2	R729	E3	RB102	B4		
C317	*L4	C523	*K2	C713	*D4	CL326	J3	CL427	H2	E300	H3	IC900	F2	R303	H3	R536	*L2	R730	E3	RB103	*B4		
C318	*L4	C524	*K3	C714	*D4	CL327	J3	CL428	H1	E301	M4	IC901	E1	R304	H3	R537	*L2	R731	E3	RB104	*C4		
C319	*L4	C525	*L2	C715	*J4	CL328	J3	CL429	H1	E500	K3	IC902	*E1	R305	H3	R538	*K2	R732	E3	RB105	*C4		
C320	*L4	C526	*L2	C716	*L4	CL329	J3	CL430	J1	E600	L3			R306	H3	R539	*K2	R733	E3	RB106	*C3		
C321	*K3	C527	*L2	C717	*D4	CL330	J3	CL431	J1	E900	F1	L1	A4	R307	*H3	R540	L3	R743	*L5	RB108	*C4		
C322	*K3	C528	*L2	C718	*D4	CL331	J3	CL432	J1			L2	B4	R308	*H3	R541	L3	R746	*L5	RB109	*C3		
C325	L3	C529	*L2	C800	*E3	CL332	J3	CL433	J1	F1	A4	L100	*C4	R309	H4	R543	*L2	R749	L5	RB110	*C3		
C326	J5	C530	*K3	C801	*G4	CL333	J3	CL434	J1	F2	A4	L101	*B3	R310	*J3	R544	*L2	R750	L5	RB111	*C3		
C327	*K4	C531	*L2	C802	*E4	CL334	J3	CL435	J1	F3	B4	L304	*M4	R311	*J3	R545	*L2	R760	*G4	RB112	*C3		
C328	*K4	C532	K2	C803	*G4	CL335	J4	CL436	J1			L500	K1	R312	*J3	R546	*L2	R761	*G4	RB113	*B4		
C329	*K4	C534	K2	C805	*H4	CL336	J4	CL437	J1	FB500	*L2	L700	*D4	R313	L4	R547	L1	R762	G4	RB114	*B4		
C330	*L4	C535	K2	C806	*J4	CL337	J4	CL438	H1	FB501	*K2	L701	*F4	R314	*L5	R548	L1	R763	G4	RB115	*C4		
C331	*L3	C536	K2	C808	*H4	CL338	J4	CL439	H1	FB502	*L2	L800	H4	R315	*L4	R549	L1	R764	F3	RB116	*C4		
C332	*K3	C537	K1	C810	*J4	CL339	J4	CL440	H1	FB503	*L2	L801	*J4	R316	*L4	R550	L3	R765	F3	RB117	*B4		
C333	*K3	C538	K3	C811	*G4	CL340	J4	CL441	H1	FB504	L1			R317	*L4	R551	K1	R766	F3	RB118	*C4		
C334	*J4	C539	L2	C812	J4	CL341	J4	CL442	H1	FB505	K1	Q1	*C5	R318	*L4	R552	K1	R767	F3	RB120	*C4		
C335	*J4	C540	L2	C901	G1	CL342	J4	CL443	H1	FB506	K1	Q51	B3	R319	*L4	R553	K1	R768	F3	RB121	B5		
C336	*J4	C541	*L2	C902	F1	CL343	J4	CL444	H1	FB507	K1	Q52	B3	R320	*K3	R554	K3	R769	F3	RB122	*C3		
C337	*K4	C542	L1	C903	*F2	CL344	J4	CL445	H1	FB508	L1	Q61	A3	R321	*L4	R555	K3	R770	*G4	RB200	D2		
C338	*L4	C543	K1	C904	*F2	CL345	J4	CL446	H1	FB600	*L2	Q62	A3	R322	*L4	R556	K3	R771	G4	RB201	D2		
C339	*L4	C544	K1	C905	*F2	CL346	J4	CL447	H1	FB601	M2	Q500	*K2	R323	L4	R557	*K2	R772	G4	RB202	D1		
C340	*K3	C545	L1	C906	*G2	CL347	J4	CL448	H1	FB602	L2	Q501	*L2	R324	L4	R600	L3	R780	G3	RB300	H4		
C341	*K3	C546	L1	C907	*G2	CL348	J4	CL449	H1	FB603	L2	Q502	*L2	R325	*L4	R601	L3	R781	G3	RB301	H4		
C342	*J4	C547	L1	C908	*G2	CL349	J4	CL450	H1			Q503	L2	R326	*L4	R603	*L3	R782	G3	RB302	H4		
C344	*K4	C548	K3	C909	*F2	CL350	J4	CL451	H1	IC1	D4	Q600	*L2	R327	L4	R604	*L3	R783	E3	RB303	J4		
C345	*K4	C549	J3	C910	*F2	CL351	*K4	CL452	H1	IC2	A4	Q601	M2	R328	*L4	R605	M2	R800	*E3	RB400	*K3		
C346	*K4	C550	K2	C911	*F2	CL352	J4	CL453	H1	IC100	B4	Q603	*K2	R330	*K3	R606	*M2	R801	*E3	RB401	*L3		
C401	*J2	C551	*K1	C912	*F2	CL353	J4	CL454	H1	IC101	C4	Q604	L2	R331	H3	R608	M2	R802	*E4	RB402	*L3		

EPR-1
SUFFIX: -15

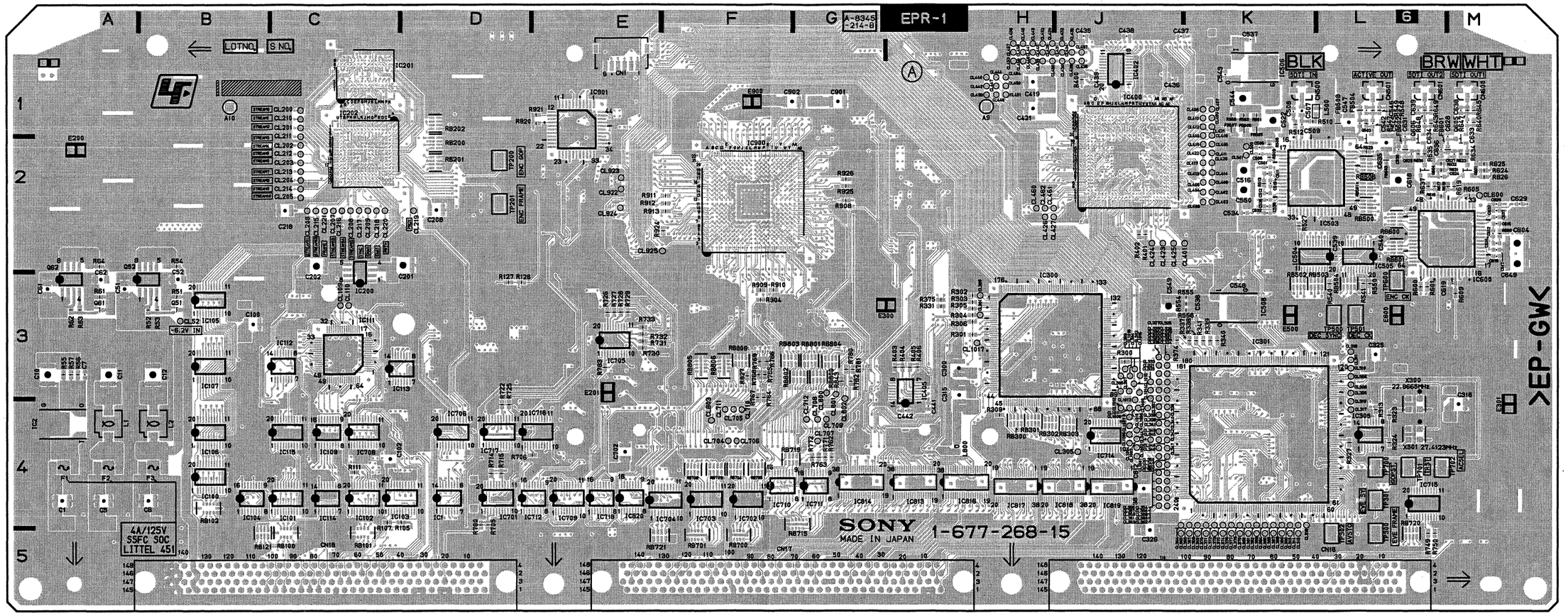

Components locations list; previous page

EPR-1 -A SIDE-
SUFFIX: -15

4-40 (b)

EPR-1
SUFFIX: -15

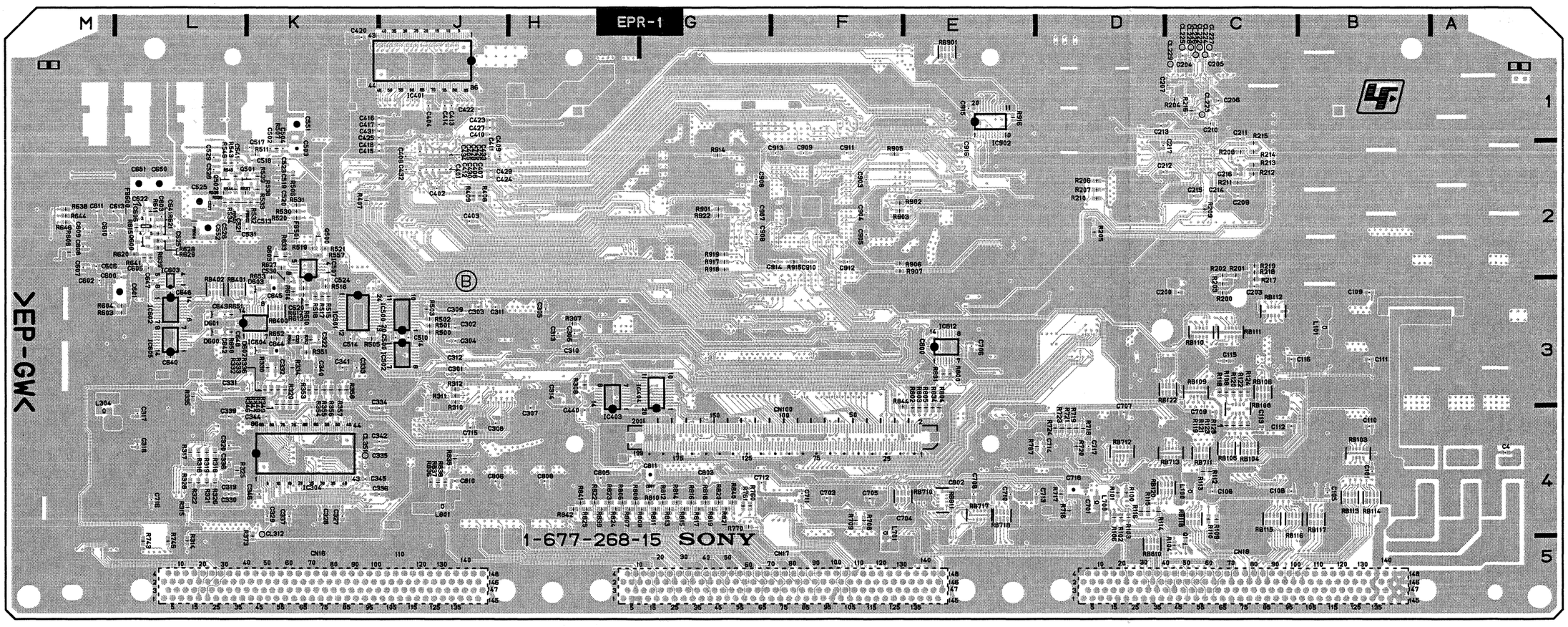

EPR-1 -B SIDE-
SUFFIX: -15

4-41 (b)

EPR-1 (1-677-268-14)

C1	A4	C403	*J2	C603	*L2	CL202	C2	CL372	K4	CL711	F4	IC603	*L3	R204	*C1	R513	K2	R720	*D4	R920	E1
C2	*A4	C404	*J1	C604	M2	CL203	C2	CL373	K5	CL712	G4	IC604	*L3	R205	*D2	R515	*K3	R721	*D4	R921	E1
C3	*B4	C405	*J2	C605	*L2	CL204	C2	CL374	K4	CL800	G3	IC605	*L3	R206	*D2	R516	*K3	R722	D4	R922	*G2
C4	*A4	C406	*J2	C606	*M2	CL205	C2	CL375	K5	CL801	G3	IC701	D4	R207	*D2	R517	*K3	R723	*D4	R924	F2
C5	A4	C407	*J2	C607	*M2	CL206	C2	CL376	K4	CL802	G4	IC702	F4	R208	*C2	R518	*K3	R724	*D4	R925	G2
C6	B4	C408	*J2	C608	*M2	CL207	C2	CL377	K5	CL803	F4	IC703	F4	R209	*C2	R519	*K2	R725	D4	R926	G2
C7	*A3	C409	*J2	C609	*M2	CL208	C2	CL378	K4	CL922	E2	IC704	E4	R210	*D2	R520	*K2	R726	E3		
C8	*A3	C410	*J1	C610	*M2	CL209	C2	CL379	K5	CL923	E2	IC705	E3	R211	*C2	R521	*K2	R727	E3	RB100	C5
C9	*B3	C411	*J2	C611	*M2	CL210	C1	CL380	K4	CL924	E2	IC706	D4	R212	*C2	R523	L2	R728	E3	RB101	C5
C10	A3	C412	*J2	C612	M2	CL211	C2	CL381	K5			IC708	C4	R213	*C2	R527	K2	R729	E3	RB102	B4
C11	A3	C413	*J1	C613	*M2	CL212	C2	CL382	K4	CN1	E1	IC709	E4	R214	*C2	R530	*K2	R730	E3	RB103	*B4
C12	B3	C414	*J1	C614	M2	CL213	C2	CL383	K5	CN16	K5	IC710	F4	R215	*C2	R531	*K2	R731	E3	RB104	*C4
C51	A3	C415	*J2	C615	M2	CL214	C2	CL384	K4	CN17	F5	IC711	G4	R216	*C1	R532	*K2	R732	E3	RB105	*C4
C52	A3	C416	*J1	C616	M2	CL215	C2	CL385	K5	CN18	C5	IC712	D4	R300	J3	R533	*K2	R733	E3	RB106	*C3
C100	B3	C417	*J1	C617	M2	CL216	C2	CL386	K4	CN100	*F4	IC714	J4	R301	H3	R534	*L2	R743	*L5	RB108	*C4
C101	*B4	C418	*J2	C618	L2	CL217	C2	CL387	K5	CN500	K1	IC715	L4	R302	H3	R535	*L2	R746	*L5	RB109	*C3
C105	*B4	C419	H1	C619	M3	CL218	C2	CL388	K4	CN501	L1	IC716	D4	R303	H3	R536	*L2	R749	L5	RB110	*C3
C106	*C4	C420	*K1	C620	*M3	CL219	D2	CL389	K5	CN600	M1	IC717	D4	R304	H3	R537	*L2	R750	L5	RB111	*C3
C107	C4	C421	H1	C621	*M2	CL220	C2	CL390	K4	CN601	L1	IC718	E4	R305	H3	R538	*K2	R760	*G4	RB112	*C3
C108	*C4	C422	*J1	C622	*L2	CL221	C2	CL400	K2			IC812	*E3	R306	H3	R539	*K2	R761	*G4	RB113	*B4
C109	*B3	C423	*J1	C623	L2	CL300	H3	CL401	K2	D600	*L3	IC813	H4	R307	*H3	R540	L3	R762	G4	RB114	*B4
C110	*B4	C424	*J2	C624	L2	CL301	H3	CL402	K2	D601	*L3	IC814	G4	R308	*H3	R541	L3	R763	G4	RB115	*C4
C111	*B3	C425	*J1	C625	*L2	CL302	J4	CL403	K2	D602	*K3	IC816	H4	R309	H4	R543	*L2	R764	F3	RB116	*C4
C112	*C4	C426	*J2	C626	M2	CL303	J3	CL404	K2	D603	*K3	IC817	H4	R310	*J3	R544	*L2	R765	F3	RB117	*B4
C113	*C4	C427	*J1	C627	M2	CL304	J3	CL405	K2			IC818	J4	R311	*J3	R545	*L2	R766	F3	RB118	*C4
C115	*C3	C428	*J2	C628	M2	CL305	J4	CL406	K2	E200	A2	IC819	J4	R312	*J3	R546	*L2	R767	F3	RB120	*C4
C116	*C3	C429	*J2	C629	M2	CL306	J3	CL407	K1	E201	E3	IC820	E4	R313	L4	R547	L1	R768	F3	RB121	B5
C200	*C3	C430	*J2	C630	L2	CL307	J3	CL408	K1	E300	H3	IC900	F2	R314	*L5	R548	L1	R769	F3	RB122	*C3
C201	D2	C431	*J1	C631	L2	CL308	L3	CL409	K1	E301	M4	IC901	E1	R315	*L4	R549	L1	R770	*G4	RB200	D2
C202	C2	C432	*J2	C632	M2	CL309	L3	CL410	K1	E500	K3	IC902	*E1	R316	*L4	R550	L3	R771	G4	RB201	D2
C203	*C3	C433	*J2	C633	M1	CL310	L3	CL411	K2	E600	L3			R317	*L4	R600	L3	R772	G4	RB202	D1
C204	*C1	C434	*J2	C634	L1	CL311	L3	CL412	K1	E900	F1	L1	A4	R318	*L4	R601	L3	R780	G3	RB300	H4
C205	*C1	C435	J1	C635	L2	CL312	*K4	CL413	K2			L2	B4	R319	*L4	R603	*L3	R781	G3	RB301	H4
C206	*C1	C436	J1	C636	L2	CL313	K5	CL414	K2	F1	A4	L100	*C4	R320	*K3	R604	*L3	R782	G3	RB302	H4
C207	*C1	C437	J1	C637	M2	CL314	K4	CL415	K2	F2	A4	L101	*B3	R321	*L4	R605	M2	R783	E3	RB303	J4
C208	D2	C438	J1	C638	M1	CL315	K5	CL416	K2	F3	B4	L304	*M4	R322	*L4	R606	*M2	R800	*E3	RB400	*K3
C209	*C2	C439	J1	C639	L1	CL316	K4	CL417	K2			L500	L1	R323	L4	R608	M2	R801	*E3	RB401	*L3
C210	*C1	C440	*H4	C640	*L3	CL317	L4	CL418	K1	FB500	*L2	L700	*D4	R324	L4	R609	M3	R802	*E4	RB402	*L3
C211	*C1	C441	H4	C642	*L3	CL318	L3	CL419	K1	FB501	*K2	L701	*F4	R325	*L4	R610	*M3	R803	*E4	RB500	L2
C212	*D2	C442	H4	C643	*L3	CL319	L4	CL420	K2	FB502	*L2	L800	H4	R326	*L4	R611	*L2	R804	*E4	RB501	L2
C213	*D1	C500	*J3	C644	*K3	CL320	L3	CL421	K1	FB503	*L2	L801	*J4	R327	L4	R612	*M3	R805	*E4	RB502	K3
C214	*C2	C501	K2	C645	*K3	CL321	J3	CL422	K2	FB504	L1			R328	*L4	R613	*M3	R806	*H4	RB503	L3
C215	*C2	C502	*K2	C646	*L3	CL322	J3	CL423	J2	FB505	K1	Q1	*C5	R330	*K3	R614	*M3	R807	*H4	RB504	L3
C216	*C2	C503	*K2	C647	*L3	CL323	J4	CL424	J2	FB506	K1	Q51	A3	R331	H3	R615	*L2	R808	*H4	RB506	L2
C217	*D2	C504	*K2	C648	*L3	CL324	J4	CL425	J2	FB507	K1	Q52	A3	R332	*K3	R616	L2	R809	*G4	RB600	L2
C218	C2	C505	K2	C701	*D4	CL325	J3	CL426	H2	FB508	L1	Q500	*K2	R333	*K3	R617	L2	R810	*G4	RB601	L2
C300	H3	C506	K2	C702	B4	CL326	J3	CL427	H2	FB600	*L2	Q501	*L2	R334	*K3	R618	M2	R811	*G4	RB700	F5
C301	*J3	C507	K1	C703	*F4	CL327	J3	CL428	H1	FB601	M2	Q502	*L2	R335	*L3	R619	M2	R812	*G4	RB701	F5
C302	*J3	C508	K1	C704	*E4	CL328	J3	CL429	H1	FB602	L2	Q503	L2	R336	*K3	R620	*L2	R813	*G4	RB704	F4
C303	*J3	C509	K1	C705	*F4	CL329	J3	CL430	J1	FB603	L2	Q600	*L2	R337	K3	R621	*L2	R814	*G4	RB705	F4
C304	*J3	C510	*J3	C706	*E3	CL330	J3	CL431	J1			Q601	M2	R338	K3	R622	*L2	R815	*G4	RB708	F4
C305	*H3	C511	K2	C707	*D4	CL331	J3	CL432	J1	IC1	D4	Q602	*L2	R339	K3	R623	M2	R816	*G4	RB709	F4
C306	*H3	C512	K2	C708	*E4	CL332	J3	CL433	J1	IC2	A4	Q603	*M2	R340	K3	R624	M2	R817	*G4	RB710	*F4
C307	*H4	C513	*K2	C709	*C4	CL333	J3	CL434	J1	IC100	B4	Q604	L2	R341	K3	R625	M2	R818	*G4	RB711	*C4
C308	*J4	C514	*K3	C710	*E4	CL334	J3	CL435	J1	IC101	C4	Q605	M2	R346	*K3	R626	M2	R819	*G4	RB712	*D4
C309	*J3	C515	K2	C711	*F4	CL335	J4	CL436	J1	IC102	C4	Q606	L2	R347	*K3	R627	*M2	R820	*G4	RB713	*C4
C310	*H3	C516	K2	C712	*G4	CL336	J4	CL437	J1	IC103	C4			R348	*K3	R628	*L2	R821	*G4	RB715	G4
C311	*J3	C517	*K2	C713	*D4	CL337	J4	CL438	H1	IC104	B4	R51	A3	R349	*K3	R629	*L2	R822	*H4	RB717	*E4
C312	*J3	C518	*K2	C714	*D4	CL338	J4	CL439	H1	IC105	B3	R52	A3	R350	*K3	R630	L2	R823	*H4	RB718	*E4
C313	*H3	C519	*K2	C715	*J4	CL339	J4	CL440	H1	IC106	B4	R53	A3	R351	*K3	R631	L2	R824	*H4	RB719	F4
C314	*H3	C520	*K2	C716	*L4	CL340	J4	CL441	H1	IC107	B3	R54	A2	R352	*K3	R632	L2	R825	*H4	RB720	L5
C315	H3	C521	*L2	C717	*D4	CL341	J4	CL442	H1	IC109	C4	R100	*D4	R353	*K3	R633	*M2	R827	F3	RB721	E5
C316	M4	C522	K1	C800	*E3	CL342	J4	CL443	H1	IC111	C3	R101	*D4	R354	*K3	R634	M2	R834	*E4	RB800	G3
C317	*L4	C523	*K2	C801	*G4	CL343	J4	CL444	H1	IC112	C3	R102	*D4	R355	*K3	R635	L2	R835	*J4	RB801	G3
C318	*L4	C524	*K3	C802	*E4	CL344	J4	CL445	H1	IC113	C3	R103	*D4	R356	*K3	R637	L2	R836	*J4	RB802	G3
C319	*L4	C525	L2	C803	*G4	CL345	J4	CL446	H1	IC114	C4	R104	*C5	R357	*K3	R638	*M2	R837	*J4	RB803	F3
C320	*L4	C526	*L2	C805	*H4	CL346	J4	CL447	H1	IC115	C4	R105	C4	R358	*K3	R639	*L2	R838	*J4	RB804	G3
C321	*K3	C527	*L2	C806	*J4	CL347	J4	CL448	H1	IC200	C3	R106	*D4	R373	*K5	R640	M1	R839	*H4	RB805	F3
C322	*K3	C528	*L2	C808	*H4	CL348	J4	CL449	H1	IC201	C1	R107	C4	R374	J3	R641	*L2	R840	*G4	RB806	F3
C325	L3	C529	*L2	C810	*J4	CL349	J4	CL450	H1	IC202	C2	R108	*C3	R375	H3	R643	L1	R841	*H4	RB809	F3
C326	J5	C530	*K2	C901	G1	CL350	J4	CL451	H1	IC300	H3	R109	*C4	R400	J1	R644	*M2	R842	*H4	RB810	*D5
C327	*K4	C531	*L2	C902	F1	CL351	*K4	CL452	H1	IC301	K4	R110	*C4	R401	J2	R645	M1	R843	G3	RB811	*E4
C328	*K4	C532	K2	C903	*F2	CL352	J4	CL453	H1	IC304	*K4	R111	C4	R402	J2	R646	*M2	R844	*F4	RB901	*E1
C329	*K4	C534	K2	C904	*F2	CL353	J4	CL454	H1	IC305	L4	R112	*C4	R403	H3	R647	M1	R901	*G2		
C330	*L4	C535	K2	C905	*F2	CL354	J4	CL455	H1	IC400	J2	R113	*C4	R404	H3	R648	L1	R902	*F2	TP200	D2
C331	*L3	C536	K2	C906	*G2	CL355	J4	CL456	H1	IC401	*J1	R114	*D4	R405	H3	R649	L1	R903	*F2	TP201	D2
C332	*K3	C537	K1	C907	*G2	CL356	J4	CL457	H1	IC402	J1	R115	*D4	R406	H3	R650	*L3	R904	F3	TP300	L5
C333	*K3	C538	K3	C908	*G2	CL357	J4	CL458	H1	IC403	*H4	R116	*D4	R407	*K2	R651	*L3	R905	*F2	TP301	L4
C334	*J4	C539	L2	C909	*F2	CL358	J4	CL459	H1	IC404	*G4	R118	*C3	R408	*J2	R652	*K3	R906	*F2	TP302	L5
C335	*J4	C540	L2	C910	*F2	CL359	J4	CL460	H2	IC405	H4	R119	*C4	R409	*J2	R653	*K3	R907	*F2	TP500	L3
C336	*J4	C541	*L2	C911	*F2	CL360	J4	CL461	H2	IC500	*J3	R120	*C3	R500	*J3	R700	D4	R908	G2	TP501	L3
C337	*K4	C542	L1	C912	*F2	CL361	J4	CL462	H2	IC501	*K3	R121	*C4	R501	*J3	R705	D4	R909	F3	TP600	L3
C338	*L4	C543	K1	C913	*F2	CL362	J4	CL500	K2	IC502	*J3	R122	*C3	R502	*J3	R706	E4	R910	F3	TP700	L4
C339	*L4	C544	K1	C914	*F2	CL363	J4	CL501	K2	IC503	L2	R123	*C4	R503	*J3	R707	*D4	R911	F2	TP701	L4
C340	*K3	C545	L1	C915	*E1	CL364	J4	CL600	M2	IC504	L2	R124	*C3	R505	*K3	R708	*F4	R912	F2	TP702	L4
C341	*K3	C546	L1	C916	*E2	CL365	J5	CL704	F4	IC505	L2	R125	*C4	R506	*K2	R709	*F4	R913	F2		
C342	*J4	C547	L1			CL366	K4	CL705	F4	IC506	K1	R126	D3	R507	*K2	R714	D4	R914	*G2	X300	L4
C344	*K4	C548	K3	CL52	B3	CL367	K5	CL706	F4	IC507	*K2	R127	D3	R508	K2	R715	D4	R915	*F2	X301	L4
C345	*K4	C549	J3	CL109	C3	CL368	K4	CL707	G4	IC508	K3	R200	*C3	R509	K2	R716	*D4	R916	*E1		
C346	*K4	C600	*L3	CL110	C3	CL369	K5	CL708	G4	IC600	L2	R201	*C2	R510	K1	R717	*D4	R917	*G2	*:B SIDE	
C401	*J2	C601	*L3	CL200	C1	CL370	K4	CL709	G4	IC601	*M2	R202	*C2	R511	*K2	R718	*D4	R918	*G2		
C402	*J2	C602	*M3	CL201	C1	CL371	K5	CL710	F4	IC602	*L3	R203	*C3	R512	K1	R719	*D4	R919	*G2		

EPR-1
SUFFIX: -14

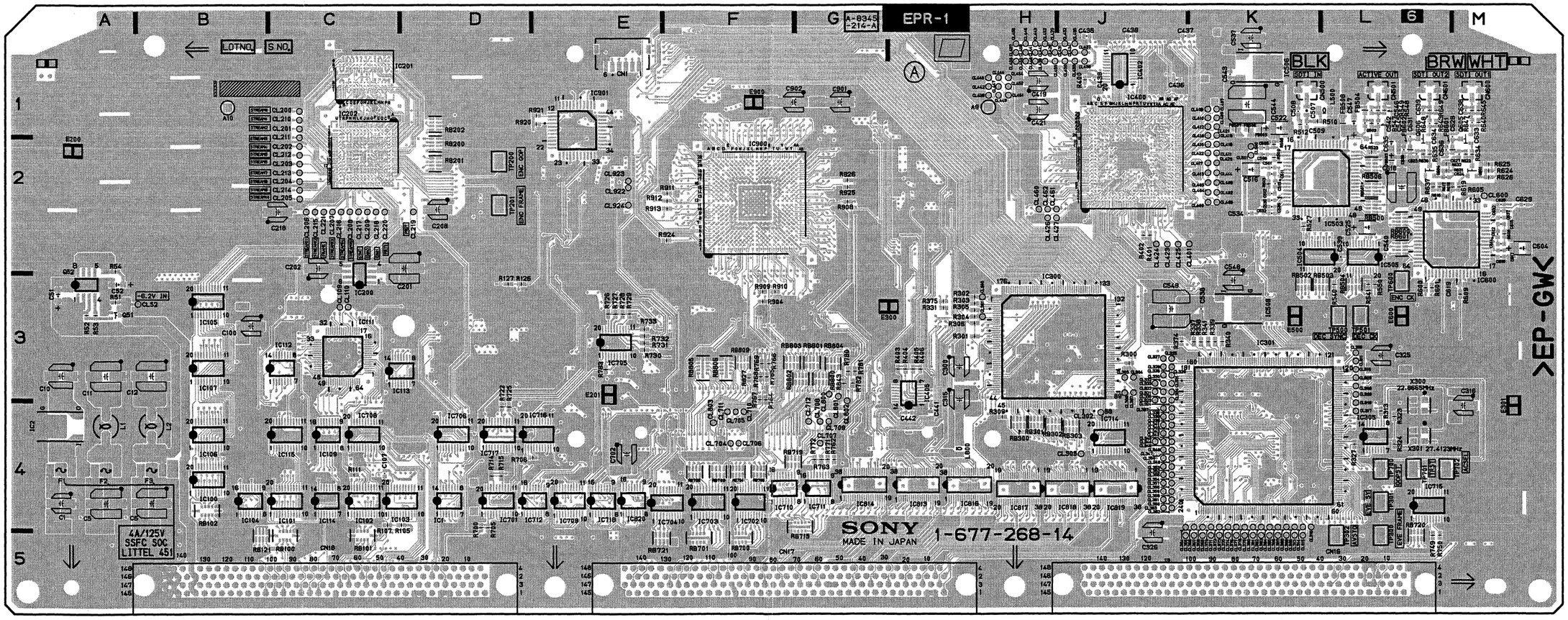

Components locations list; previous page

EPR-1 -A SIDE-
SUFFIX: -14

4-40 (a)

EPR-1
SUFFIX: -14

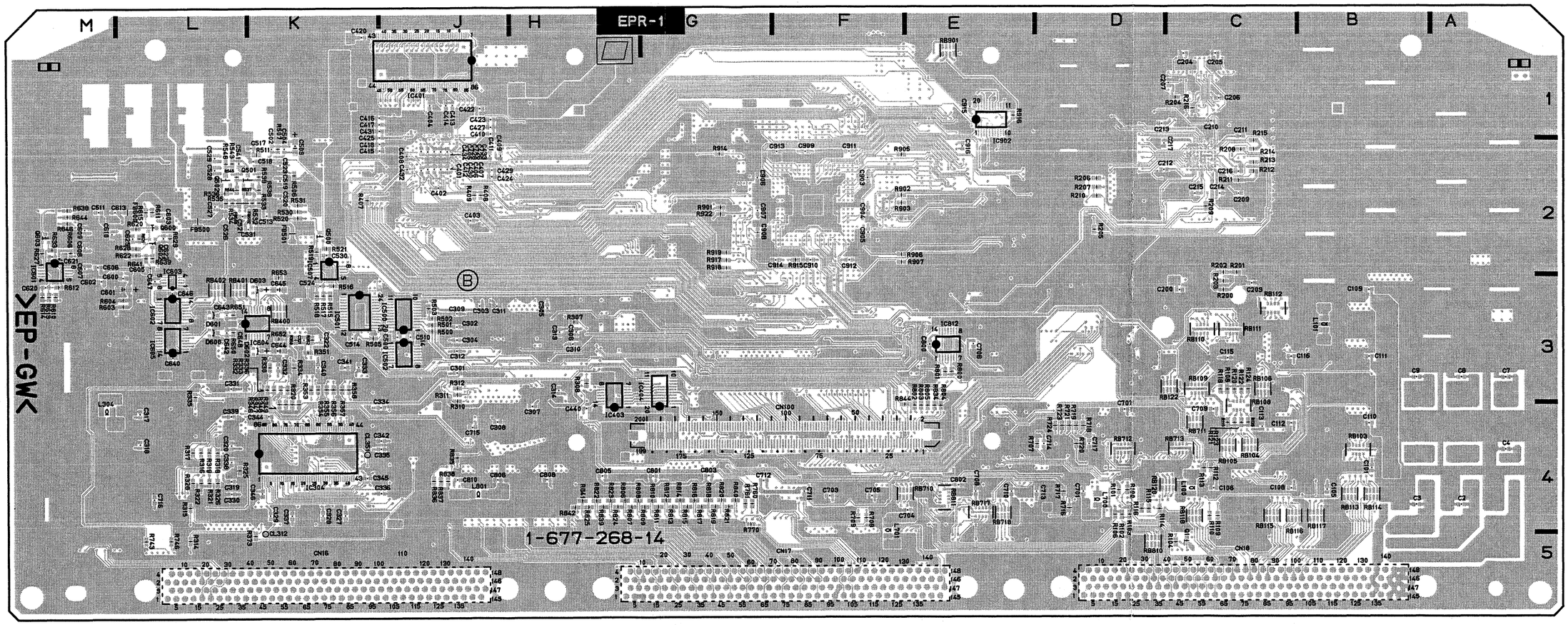

EPR-1 -B SIDE-
SUFFIX: -14

4-41 (a)

EQ-84
SUFFIX: -13

EQ-84 (1-677-289-13)

A3	E3	C416	A1	C790	*D3	C1137	*G1	C1714	D4	CL1032	C3	IC205	E5
A4	E5	C417	A1	C791	*D3	C1138	*F1	C1715	D4	CL1033	C3	IC206	F4
		C418	*B1	C792	D3	C1139	*G3	C1716	D4	CL1034	C3	IC207	F4
C100	*G3	C419	*B2	C900	*C2	C1400	A2	C1717	D5	CL1035	C3	IC208	*E5
C101	*G3	C420	*B1	C901	*C2	C1401	A2	C1718	D5	CL1100	F2	IC209	A6
C102	B5	C421	A2	C902	*C1	C1402	A3	C1719	*D5	CL1101	G2	IC300	F5
C103	D5	C422	A2	C903	*B2	C1403	A3	C1720	*D4	CL1102	F1	IC301	G5
C104	C5	C423	A2	C904	*B2	C1404	*A2	C1721	*D4	CL1103	F2	IC302	G5
C105	B6	C490	*A2	C905	*B2	C1405	A2	C1790	*D4	CL1104	F2	IC400	B1
C106	*B5	C491	*B2	C906	*C3	C1406	A2	C1791	*D4	CL1105	G2	IC401	*A2
C107	*D5	C492	B2	C907	*C3	C1407	*A2	C1792	D4	CL1106	F1	IC500	D1
C108	*C5	C500	D2	C908	*C2	C1408	*A2			CL1107	F2	IC501	*E2
C109	*B6	C501	D1	C909	*C1	C1410	A3	CL100	F3	CL1400	B3	IC600	B3
C110	*F3	C502	D1	C910	*C1	C1411	*B2	CL101	F3	CL1401	B3	IC601	*A5
C200	*F3	C503	D1	C911	*C1	C1412	B3	CL102	F3	CL1402	A2	IC602	*A4
C201	*E4	C504	*D2	C912	*B1	C1413	B3	CL103	F3	CL1500	D2	IC700	D3
C202	*E4	C505	D1	C913	*B2	C1414	A3	CL104	F3	CL1501	D2	IC701	*E4
C203	*F3	C506	D1	C914	*B3	C1415	B3	CL105	G3	CL1502	D3	IC900	C2
C204	*F4	C507	*D1	C915	*C3	C1416	A2	CL106	G3	CL1600	B5	IC901	*C3
C205	*E4	C508	*D1	C916	*C3	C1417	A2	CL200	F3	CL1601	B5	IC931	*C2
C206	*F4	C510	D1	C917	*B2	C1418	*B2	CL201	F3	CL1602	A4	IC932	*C2
C207	*E3	C511	*D1	C918	*C2	C1419	*B3	CL202	F3	CL1700	D4	IC1000	C4
C208	*F4	C512	D1	C930	*C3	C1420	*B2	CL203	F3	CL1701	D4	IC1001	*C5
C209	*E4	C513	D1	C931	*C2	C1490	*A3	CL206	F3	CL1702	D5	IC1030	*C5
C210	*E4	C514	D1	C932	*C2	C1491	*B3	CL207	E4			IC1031	*C5
C211	*F4	C515	D1	C933	*C2	C1492	B3	CL208	E4	CN1	E6	IC1032	*C5
C212	*F4	C516	D2	C934	*C2	C1500	D3	CL209	E4	CN100	E1	IC1033	*B5
C213	*E4	C517	D2	C1000	*C4	C1501	D2	CL210	E4	CN101	G3	IC1034	*C4
C214	*E4	C518	*D2	C1001	*C4	C1502	D2	CL400	B2	CN200	E4	IC1035	*C4
C215	*F5	C519	*D1	C1002	*C3	C1503	D2	CL401	B2	CN400	A1	IC1100	E1
C216	A6	C520	*D1	C1003	*C3	C1504	*D3	CL402	A1	CN500	E1	IC1101	E1
C217	E4	C521	*E2	C1004	*B4	C1505	D2	CL500	D1	CN600	A3	IC1102	F1
C218	*A5	C522	D2	C1005	*B4	C1506	D2	CL501	D1	CN700	E3	IC1103	E1
C219	E5	C523	E2	C1006	*B3	C1507	*D2	CL502	D2	CN1100	F1	IC1104	*G2
C220	A6	C590	*D1	C1007	*C4	C1508	*D2	CL600	B4	CN1400	A2	IC1105	*F2
C221	*F4	C591	*D1	C1008	*C4	C1510	D2	CL601	B4	CN1500	E2	IC1106	*G1
C222	*F5	C592	D1	C1009	*C3	C1511	*D2	CL602	A3	CN1600	A4	IC1107	E2
C223	*E5	C600	A3	C1010	*C3	C1512	D2	CL700	D3	CN1700	E4	IC1108	*G3
C224	*D5	C601	A3	C1011	*C3	C1513	D2	CL701	D3			IC1109	E2
C225	*E5	C602	A4	C1012	*B3	C1514	D2	CL702	D4	D200	*F4	IC1110	*G2
C226	*F5	C603	A4	C1013	*B4	C1515	D2	CL900	B2	D201	*A6	IC1111	*F2
C227	A6	C604	*A3	C1014	*B4	C1516	D3	CL901	B2	D930	C3	IC1112	*G2
C300	*G5	C605	*A5	C1015	*C4	C1517	D3	CL902	D2	D1030	C5	IC1113	G2
C301	*G5	C606	*A5	C1016	*C4	C1518	*D3	CL903	D2	D1100	*F2	IC1114	E2
C302	*G5	C607	A3	C1017	*B4	C1519	*D2	CL904	D1	D1101	*G2	IC1115	E2
C303	*F5	C608	A3	C1018	*C4	C1520	*D2	CL905	D1	D1102	F2	IC1400	B2
C304	*G5	C609	*A3	C1031	C5	C1590	*D2	CL906	D1	D1103	F2	IC1500	D2
C305	*G5	C610	*A5	C1032	*B5	C1591	*D2	CL907	D1	D1104	F2	IC1600	B4
C306	*G5	C611	*A5	C1033	*C5	C1592	D2	CL908	D1			IC1601	*B5
C307	*G4	C612	*A3	C1034	*C4	C1600	A4	CL909	D1	E100	E1	IC1700	D4
C308	*G4	C613	*A5	C1035	*C4	C1601	A4	CL910	C1	E101	A1		
C309	*F4	C616	A4	C1036	*C4	C1602	A5	CL911	C1	E200	E5	L100	B5
C310	*F4	C618	*B3	C1037	*C4	C1603	A5	CL912	C1	E900	D3	L101	D5
C311	*F5	C619	B4	C1038	*C5	C1604	*A4	CL913	C1	E1000	C5	L102	C5
C312	*G4	C620	B4	C1039	*C5	C1605	*B5	CL914	C1	E1100	F2	L103	B6
C313	*G4	C621	A4	C1100	*E1	C1606	*B5	CL915	C1			L490	B2
C314	*G4	C622	B4	C1101	*E1	C1607	A4	CL916	C1	F100	D5	L590	*D1
C315	*G4	C623	A3	C1102	*E2	C1608	A4	CL917	B1	F101	C5	L690	B4
C316	*G5	C624	A3	C1103	*E1	C1609	*A4	CL918	B1			L790	D3
C317	*G5	C625	*B3	C1104	*E2	C1610	*B5	CL919	B1	FL300	G5	L1490	B3
C318	*G5	C626	*B4	C1105	*E1	C1611	*B5	CL920	B1	FL301	G4	L1590	D2
C319	*G5	C627	*B3	C1106	*E2	C1612	*A4	CL921	C1	FL302	G4	L1690	*B5
C320	*G5	C628	A4	C1107	*E2	C1613	*B5	CL930	C1	FL303	G4	L1790	D4
C321	*G5	C629	A4	C1108	*E2	C1614	*A5	CL931	C1	FL304	G4		
C322	*G5	C630	A4	C1109	*E2	C1616	*A5	CL932	C1	FL930	*C3	Q200	*E4
C323	*F5	C690	*A4	C1110	*F1	C1618	A5	CL933	C1	FL1030	C5	Q201	*E4
C324	*G4	C691	*B4	C1111	*E1	C1620	*B4	CL934	C1	FL1031	C5	Q202	*E4
C325	*G4	C692	B4	C1112	*F2	C1621	B5	CL935	C1	FL1032	D5	Q203	*E4
C326	*E5	C700	*E3	C1113	*F1	C1622	B5	CL1000	B3	FL1033	D5	Q300	*G5
C327	*G5	C701	D4	C1114	*E2	C1623	A5	CL1001	B4	FL1034	C5	Q301	*G4
C328	*F4	C702	D3	C1115	*E1	C1624	B5	CL1002	D4	FL1035	C5	Q302	*G4
C329	*F4	C703	D3	C1116	*G2	C1625	A4	CL1003	D4	FL1036	C5	Q303	*G4
C330	*G5	C704	D3	C1117	*G2	C1626	A4	CL1004	D3	FL1037	D5	Q304	*G4
C331	*G4	C705	*D4	C1118	*F2	C1627	*B4	CL1005	D3	FL1038	D5	Q305	*G4
C332	*G4	C706	D3	C1119	*E2	C1628	*B4	CL1006	C3	FL1039	B5	Q306	*G3
C333	*G5	C707	D3	C1120	*F2	C1629	*B4	CL1007	C3	FL1040	B5	Q307	*G4
C334	*G6	C708	*D3	C1121	*F2	C1690	*A5	CL1008	C3	FL1041	C5	Q308	*G4
C400	A1	C709	*D3	C1122	*E2	C1691	*B5	CL1009	C3	FL1042	C5	Q309	*G4
C401	A1	C711	D3	C1123	*F2	C1692	B5	CL1010	C3	FL1043	C5	Q310	*G4
C402	A2	C712	*D3	C1124	*G2	C1700	*E4	CL1011	C3	FL1044	B5	Q311	*G4
C403	A2	C713	D3	C1125	*E3	C1701	D5	CL1012	C3	FL1045	B5	Q312	*G4
C404	*A1	C714	D3	C1126	*E2	C1702	D4	CL1013	C3	FL1046	C5	Q313	*F4
C405	A1	C715	D3	C1127	*E2	C1703	D4	CL1014	C3	FL1047	C5	Q314	*F4
C406	A1	C716	D3	C1128	*F3	C1704	D4	CL1015	C3	FL1048	C5	Q490	*B2
C407	*A1	C717	D4	C1129	*E2	C1705	*D5	CL1016	C3			Q491	*B2
C408	*A1	C718	D4	C1130	*G2	C1706	D4	CL1017	B3	IC100	F3	Q590	*D1
C410	A2	C719	*D4	C1131	G2	C1707	D4	CL1018	B3	IC101	*F3	Q591	*D1
C411	*B1	C720	*D3	C1132	G2	C1708	*D4	CL1019	B3	IC200	F5	Q690	*B4
C412	B2	C721	*D3	C1133	*G2	C1709	*D4	CL1020	B3	IC201	E5	Q691	*B4
C413	B2	C722	*E4	C1134	*E3	C1711	D4	CL1021	C3	IC202	F5	Q700	*E3
C414	A2	C723	D4	C1135	*E3	C1712	*D4	CL1030	C3	IC203	F4	Q701	*E3
C415	B2	C724	E4	C1136	*G1	C1713	D4	CL1031	C3	IC204	D5	Q702	*E3

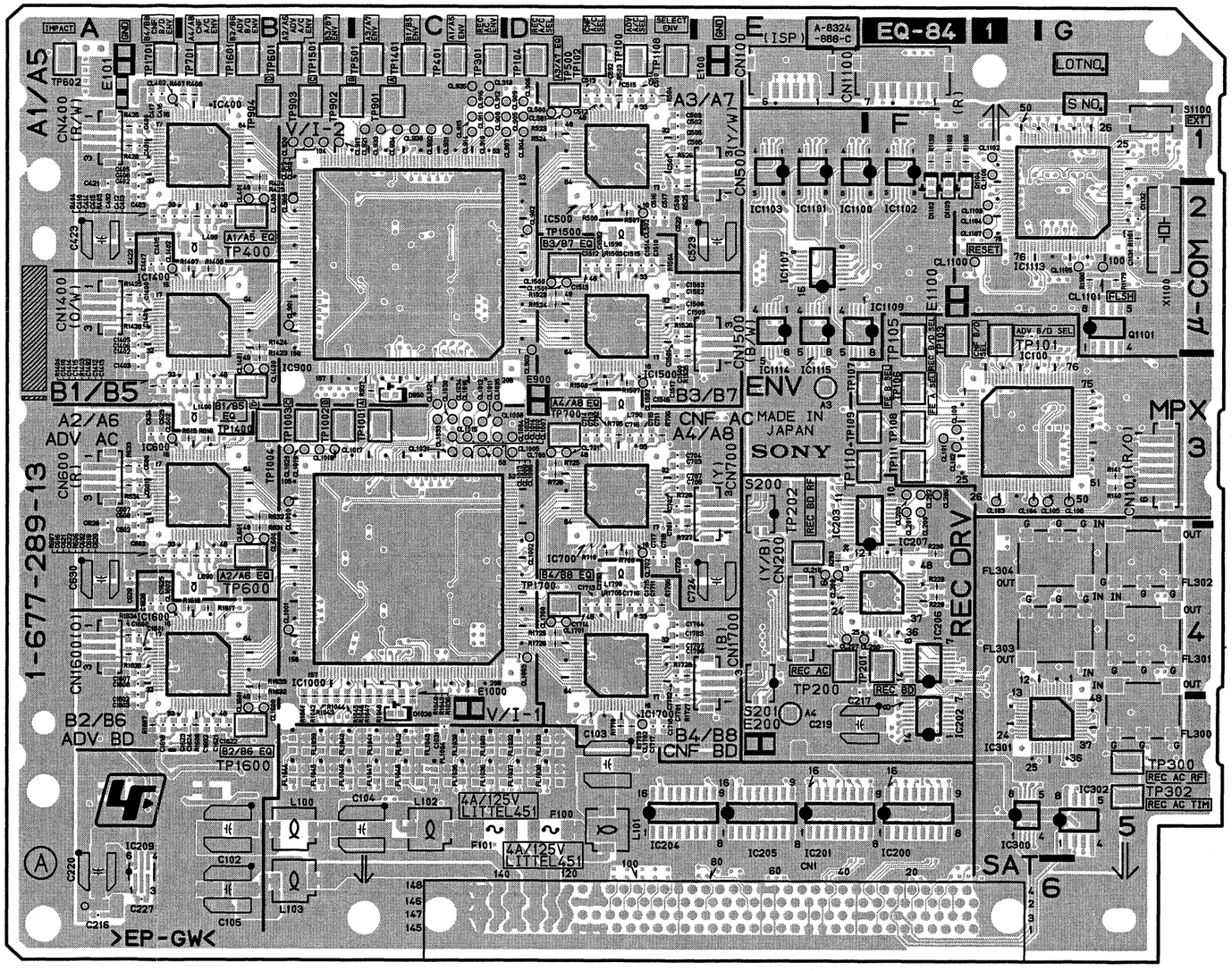

EQ-84 -A SIDE-
SUFFIX: -13

4-42 (b)

EQ-84
SUFFIX: -13

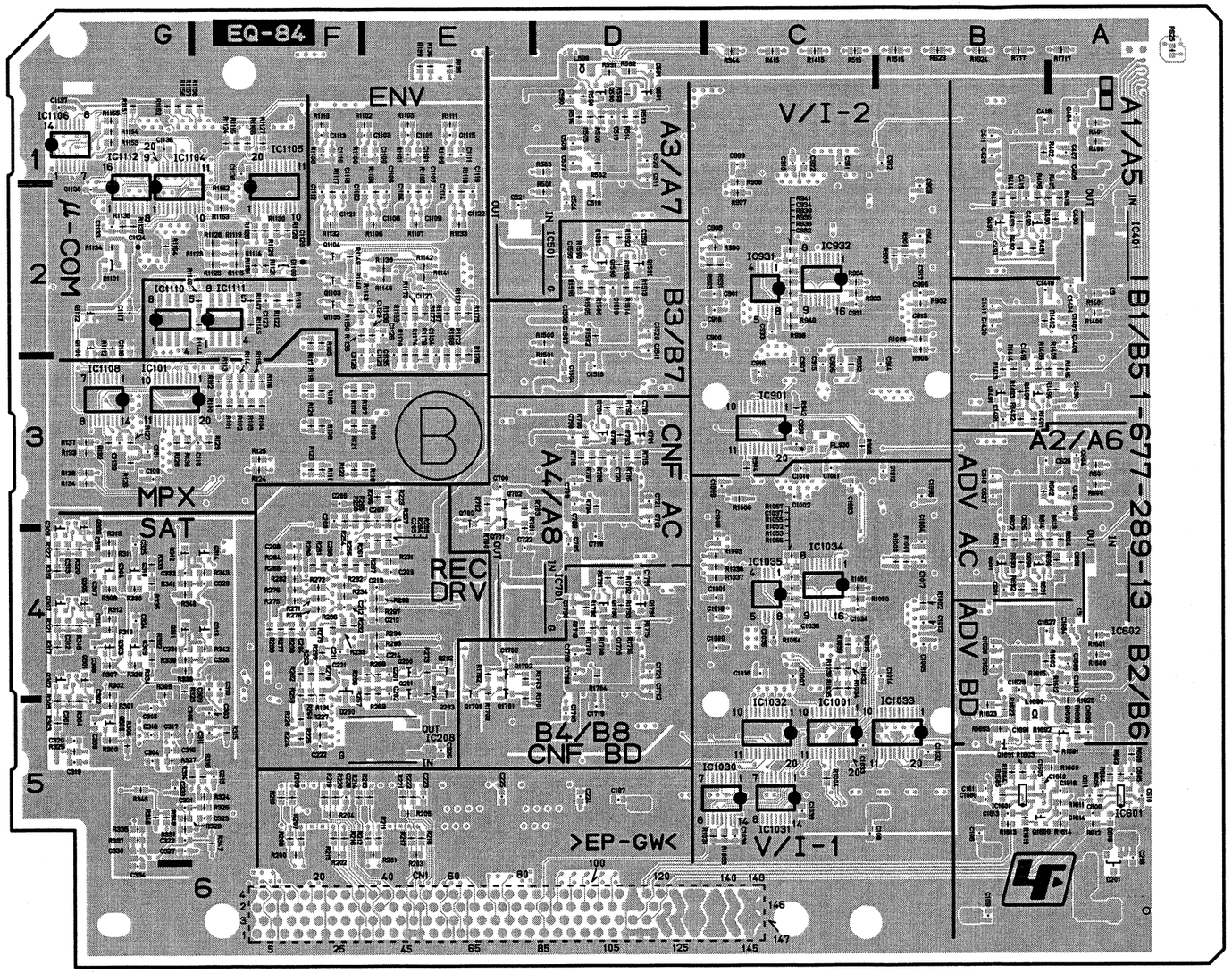

EQ-84 -B SIDE-
SUFFIX: -13

Q790	*D3	R229	F4	R344	*C1	R728	D3	R1130	*F2	R1593	*D2	TP1004	B3		
Q791	*D3	R230	F4	R345	*G5	R790	*D3	R1131	*F2	R1600	*A4	TP1108	D1		
Q1100	*G2	R231	*E4	R346	*G5	R791	*D3	R1132	*F2	R1601	*A4	TP1400	B3		
Q1101	G2	R232	*F4	R347	*F5	R792	*D3	R1133	*E2	R1602	*B4	TP1401	C1		
Q1102	*G2	R233	*F4	R348	*G5	R793	*D3	R1134	*G2	R1603	*B5	TP1500	D2		
Q1103	*F2	R234	*F4	R400	*A1	R900	*B2	R1135	*G2	R1604	*B5	TP1501	B1		
Q1104	*F2	R254	*F3	R401	*A1	R901	*B2	R1136	*F2	R1605	*B5	TP1600	B5		
Q1105	*F2	R255	*E4	R402	*B1	R902	*B2	R1137	*G2	R1606	B5	TP1601	B1		
Q1490	*B3	R256	*F4	R403	B2	R903	*C2	R1138	*E2	R1607	A5	TP1700	D4		
Q1491	*B3	R257	*E3	R404	A2	R904	*C3	R1139	*E2	R1609	*A5	TP1701	A1		
Q1590	*D2	R258	*F3	R405	*B2	R905	*B2	R1140	*E2	R1610	*B5				
Q1591	*D2	R259	*F4	R406	*B2	R906	*C2	R1141	*E2	R1611	*A5	X1100	G2		
Q1600	*B5	R260	*F4	R407	B1	R907	*C2	R1142	*E2	R1612	*B4				
Q1690	*A5	R261	*F4	R408	B1	R908	*C3	R1143	*F2	R1613	*B5	*:B SIDE			
Q1691	*B5	R262	*F4	R413	*B2	R930	*C2	R1144	*F2	R1614	*A5				
Q1700	*E4	R263	*F4	R414	*B2	R931	*C2	R1145	*F2	R1615	*B4				
Q1701	*E4	R264	*E4	R415	*C1	R932	*C3	R1146	*F2	R1616	B4				
Q1702	*E4	R265	*E3	R416	*A2	R933	*C2	R1147	*F2	R1617	B4				
Q1790	*D4	R266	*E4	R423	B2	R934	*C2	R1148	*F2	R1622	*B5				
Q1791	*D4	R267	*E4	R424	B1	R935	*C2	R1149	*F2	R1623	*B5				
		R268	*E4	R425	A1	R936	*C2	R1150	*F2	R1624	*B1				
R100	*F3	R269	*E4	R426	A1	R937	C3	R1151	*G1	R1625	*A5				
R101	*F3	R270	*F4	R490	*A2	R938	*C2	R1152	*G1	R1632	B5				
R102	*F3	R271	*F4	R491	*B2	R939	*C2	R1153	*G1	R1633	B4				
R103	*F3	R272	*F4	R492	*B2	R940	*C2	R1154	*G1	R1634	A4				
R104	*F3	R273	*E4	R493	*B2	R941	*C2	R1155	*G1	R1635	A4				
R105	*F2	R274	*E4	R500	*D1	R942	*C3	R1156	*G1	R1690	*A5				
R106	*F3	R275	*F4	R501	*D2	R1000	*B4	R1157	*G1	R1691	*B5				
R107	*E3	R276	*F4	R502	*D1	R1001	*B4	R1158	*F1	R1692	*B5				
R108	*F3	R277	*F4	R503	D1	R1002	*B4	R1159	F1	R1693	*B5				
R109	*E3	R278	*F4	R504	D1	R1003	*C4	R1160	F1	R1700	*E4				
R110	*E3	R279	*F4	R505	*D1	R1004	*C5	R1161	G2	R1701	*E5				
R111	*F3	R280	*F4	R506	*D1	R1005	*B2	R1162	*F2	R1702	*E4				
R112	*F3	R281	*F4	R507	D2	R1006	*C3	R1163	*F2	R1703	*E4				
R113	*F3	R282	*F4	R508	D2	R1030	*C4	R1164	*G2	R1704	*D4				
R114	*F3	R283	*F4	R513	*D1	R1031	*C5	R1165	F1	R1705	D4				
R115	*F3	R284	*F4	R514	*D1	R1032	*C4	R1166	*F1	R1706	D4				
R116	*F3	R286	*F4	R515	*C1	R1033	*C5	R1167	*E2	R1707	*D4				
R117	*F2	R287	*E4	R516	*D1	R1034	*C4	R1168	*E3	R1708	*D4				
R118	*F3	R288	*F4	R523	D1	R1035	*C4	R1169	*E2	R1709	D5				
R119	*F3	R292	*F4	R524	D1	R1036	C5	R1170	*E3	R1710	D5				
R120	*F3	R293	E4	R525	D2	R1037	*C4	R1171	*E2	R1715	*D4				
R121	*F3	R294	*E4	R526	D1	R1038	*C4	R1172	*E3	R1716	*D4				
R122	*F3	R295	*E4	R590	*D1	R1039	*C4	R1173	*E2	R1717	*A1				
R123	*F3	R296	*E4	R591	*D1	R1040	C5	R1174	*E3	R1718	*D4				
R124	*F3	R297	*E4	R592	*D1	R1041	B5	R1175	*E2	R1725	D4				
R125	*F3	R298	*F4	R593	*D1	R1042	B5	R1176	*E2	R1726	D4				
R126	*G3	R299	*F4	R600	*A3	R1043	B5	R1177	*E2	R1727	D5				
R127	*G3	R300	*G5	R601	*A3	R1044	B5	R1178	*E3	R1728	D4				
R128	*G3	R301	*G5	R602	*B3	R1045	B5	R1179	G2	R1790	*D4				
R129	*F3	R302	*G4	R603	*A5	R1046	C5	R1180	G2	R1791	*D4				
R130	*G3	R303	*G5	R604	*A5	R1047	C5	R1400	*A2	R1792	*D4				
R131	*F4	R304	*G5	R605	*A5	R1048	C5	R1401	*A2	R1793	*D4				
R132	*G3	R305	*G5	R606	B4	R1049	C5	R1402	*B2						
R133	*G3	R306	*G5	R607	A4	R1050	*C4	R1403	B3	S200	E3				
R134	*G3	R307	*G4	R609	*A5	R1051	*C4	R1404	A3	S201	E4				
R135	*E1	R308	*G4	R612	*A5	R1052	*C4	R1405	*B3	S1100	G1				
R136	*E1	R309	*G4	R613	*B4	R1053	*C4	R1406	*B3						
R137	*G3	R310	*G4	R614	*B4	R1054	*C4	R1407	B2	TP100	D1				
R138	*G3	R311	*G4	R615	B3	R1055	*C4	R1408	B2	TP101	F2				
R139	*E1	R312	*G4	R616	B3	R1056	*C4	R1413	*B3	TP102	D1				
R140	G3	R313	*G4	R621	*B4	R1057	*C4	R1414	*B3	TP103	F2				
R141	G3	R314	*G5	R622	*B4	R1100	*E1	R1415	*C1	TP104	D1				
R200	*F5	R315	*F5	R623	*B1	R1101	*E1	R1416	*A3	TP105	F2				
R201	*E5	R316	*F5	R624	*A4	R1102	*E1	R1423	B3	TP106	F3				
R202	*F5	R317	*G4	R625	*A1	R1103	*E1	R1424	B2	TP107	F3				
R203	*E5	R318	*G4	R631	B4	R1104	*E2	R1425	A2	TP108	F3				
R204	*F5	R319	*G4	R632	B3	R1105	*E2	R1426	A2	TP109	F3				
R205	*E5	R320	*G4	R633	A3	R1106	*E2	R1490	*A3	TP110	F3				
R206	*E3	R321	*G4	R634	A3	R1107	*E2	R1491	*B3	TP111	F3				
R207	*F5	R322	*G4	R690	*A4	R1108	*F1	R1492	*B3	TP200	E4				
R208	*F5	R323	*G4	R691	*B4	R1109	*E1	R1493	*B3	TP201	F4				
R209	*F5	R324	*F5	R692	*B4	R1110	*F1	R1500	*D2	TP202	E4				
R210	*F5	R325	*G5	R693	*B4	R1111	*E1	R1501	*D3	TP300	G5				
R211	*E5	R326	*F5	R700	*E3	R1112	*G2	R1502	*D2	TP301	C1				
R212	*E5	R327	*G5	R701	*E4	R1113	*F2	R1503	D2	TP302	G5				
R213	*E5	R328	*G5	R702	*E3	R1114	*F2	R1504	D2	TP400	B2				
R214	*F5	R329	*G4	R703	*E3	R1115	*F2	R1505	*D2	TP401	C1				
R215	*F5	R330	*G4	R704	*D3	R1116	*F1	R1506	*D2	TP500	D1				
R216	*F5	R331	*G5	R705	D3	R1117	*F2	R1507	D3	TP501	C1				
R217	*E5	R332	*G4	R706	D3	R1118	*E2	R1508	D3	TP600	B4				
R218	*E5	R333	*G4	R707	*D3	R1119	*F2	R1513	*D2	TP601	B1				
R219	*F5	R334	*G4	R708	*D3	R1120	*F2	R1514	*D2	TP602	A1				
R220	*F5	R335	*G4	R709	D4	R1121	*F2	R1515	*B1	TP700	D3				
R221	*E5	R336	*G5	R710	D4	R1122	*F2	R1516	*D2	TP701	B1				
R222	*E5	R337	*G5	R715	*D3	R1123	*F2	R1523	D2	TP901	C1				
R223	*E3	R338	*G4	R716	*D3	R1124	*F1	R1524	D2	TP902	B1				
R224	*F5	R339	*G4	R717	*B1	R1125	*F2	R1525	D3	TP903	B1				
R225	*F5	R340	*G4	R718	*D3	R1126	*F2	R1526	D2	TP904	B1				
R226	*F5	R341	*G4	R725	D3	R1127	*F1	R1590	*D2	TP1001	C3				
R227	*F5	R342	*F4	R726	D3	R1128	*F2	R1591	*D2	TP1002	B3				
R228	F4	R343	*F4	R727	D4	R1129	*F2	R1592	*D2	TP1003	B3				

EQ-84
SUFFIX: -12

EQ-84 (1-677-289-12)

C100	*G3	C420	*B1	C792	D3	C1139	*G3	C1714	D4	CL1032	C3	IC207	F4
C101	*G3	C421	A2	C900	*C2	C1400	A2	C1715	D4	CL1033	C3	IC208	*E5
C102	B5	C422	A2	C901	*C2	C1401	A2	C1716	D4	CL1034	C3	IC209	A6
C103	D5	C423	A2	C902	*C1	C1402	A3	C1717	D5	CL1035	C3	IC300	F5
C104	C5	C490	*A2	C903	*B2	C1403	A3	C1718	D5	CL1100	F2	IC301	G5
C105	B6	C491	*B2	C904	*B2	C1404	*A2	C1719	*D5	CL1101	G2	IC302	G5
C106	*B5	C492	B2	C905	*B2	C1405	A2	C1720	*D4	CL1102	F1	IC400	B1
C107	*D5	C500	D2	C906	*C3	C1406	A2	C1721	*D4	CL1103	F2	IC401	*A2
C108	*C5	C501	D1	C907	*C3	C1407	*A2	C1790	*D4	CL1104	F2	IC500	D1
C109	*B6	C502	D1	C908	*C2	C1408	*A2	C1791	*D4	CL1105	G2	IC501	*E2
C110	*F3	C503	D1	C909	*C1	C1410	A3	C1792	D4	CL1106	F1	IC600	B3
C200	*F3	C504	*D2	C910	*C1	C1411	*B2			CL1107	F2	IC601	A5
C201	*E4	C505	D1	C911	*C1	C1412	B3	CL100	F3	CL1400	B3	IC602	*A4
C202	*E4	C506	D1	C912	*B1	C1413	B3	CL101	F3	CL1401	B3	IC700	D3
C203	*F3	C507	*D1	C913	*B2	C1414	A3	CL102	F3	CL1402	A2	IC701	*E4
C204	*F4	C508	*D1	C914	*B3	C1415	B3	CL103	F3	CL1500	D2	IC900	C2
C205	*E4	C510	D1	C915	*C3	C1416	A2	CL104	F3	CL1501	D2	IC901	*C3
C206	*F4	C511	*D1	C916	*C3	C1417	A2	CL105	G3	CL1502	D3	IC931	*C2
C207	*E3	C512	D1	C917	*B2	C1418	*B2	CL106	G3	CL1600	B5	IC932	*C2
C208	*F4	C513	D1	C918	*C2	C1419	*B3	CL200	F3	CL1601	B5	IC1000	C4
C209	*E4	C514	D1	C930	*C3	C1420	*B2	CL201	F3	CL1602	A4	IC1001	*C5
C210	*E4	C515	D1	C931	*C2	C1490	*A3	CL202	F3	CL1700	D4	IC1030	*C5
C211	*F4	C516	D2	C932	*C2	C1491	*B3	CL203	F3	CL1701	D4	IC1031	*C5
C212	*F4	C517	D2	C933	*C2	C1492	B3	CL206	F3	CL1702	D5	IC1032	*C5
C213	*E4	C518	*D2	C934	*C2	C1500	D3	CL207	E4			IC1033	*B5
C214	*E4	C519	*D1	C1000	*C4	C1501	D2	CL208	E4	CN1	E6	IC1034	*C4
C215	*F5	C520	*D1	C1001	*C4	C1502	D2	CL209	E4	CN100	G1	IC1035	*C4
C216	A6	C521	*E2	C1002	*C3	C1503	D2	CL210	E4	CN101	G3	IC1100	E1
C217	E4	C522	D2	C1003	*C3	C1504	*D3	CL400	B2	CN200	E4	IC1101	E1
C218	*A5	C523	E2	C1004	*B4	C1505	D2	CL401	B2	CN400	A1	IC1102	F1
C219	E5	C590	*D1	C1005	*B4	C1506	D2	CL402	A1	CN500	E1	IC1103	E1
C220	A6	C591	*D1	C1006	*B3	C1507	*D2	CL500	D1	CN600	A3	IC1104	*G2
C221	*F4	C592	D1	C1007	*C4	C1508	*D2	CL501	D1	CN700	E3	IC1105	*F2
C222	*F5	C600	A3	C1008	*C4	C1510	D2	CL502	D2	CN1100	F1	IC1106	*G1
C223	*E5	C601	A3	C1009	*C3	C1511	*D2	CL600	B4	CN1400	A2	IC1107	E2
C224	*D5	C602	A4	C1010	*C3	C1512	D2	CL601	B4	CN1500	E2	IC1108	*G3
C225	*E5	C603	A4	C1011	*C3	C1513	D2	CL602	A3	CN1600	A4	IC1109	E2
C226	*F5	C604	*A3	C1012	*B3	C1514	D2	CL700	D3	CN1700	E4	IC1110	*G2
C300	*G5	C605	*A5	C1013	*B4	C1515	D2	CL701	D3			IC1111	*F2
C301	*G5	C606	*A5	C1014	*B4	C1516	D3	CL702	D4	D930	C3	IC1112	*G2
C302	*G5	C607	A3	C1015	*C4	C1517	D3	CL900	B2	D1030	C5	IC1113	G2
C303	*F5	C608	A3	C1016	*C4	C1518	*D3	CL901	B2	D1100	*F2	IC1114	E2
C304	*G5	C609	*A3	C1017	*B4	C1519	*D2	CL902	D2	D1101	*G2	IC1115	E2
C305	*G5	C610	*A5	C1018	*C4	C1520	*D2	CL903	D2	D1102	F2	IC1400	B2
C306	*G5	C611	*A5	C1031	C5	C1590	*D2	CL904	D1	D1103	F2	IC1500	D2
C307	*G4	C612	*A3	C1032	*B5	C1591	*D2	CL905	D1	D1104	F2	IC1600	B4
C308	*G4	C613	*A5	C1033	*C5	C1592	D2	CL906	D1			IC1601	A5
C309	*F4	C614	*A5	C1034	*C4	C1600	A4	CL907	D1	E100	E1	IC1700	D4
C310	*F4	C616	A4	C1035	*C4	C1601	A4	CL908	D1	E101	A1		
C311	*F5	C617	*A5	C1036	*C4	C1602	A5	CL909	D1	E200	E5	L100	B5
C312	*G4	C618	*B3	C1037	*C4	C1603	A5	CL910	C1	E900	D3	L101	D5
C313	*G4	C619	B4	C1038	*C5	C1604	*A4	CL911	C1	E1000	C5	L102	C5
C314	*G4	C620	B4	C1039	*C5	C1605	*B5	CL912	C1	E1100	F2	L103	B6
C315	*G4	C621	A4	C1100	*E1	C1606	*A5	CL913	C1			L490	B2
C316	*G5	C622	B4	C1101	*E1	C1607	A4	CL914	C1	F100	D5	L590	D1
C317	*G5	C623	A3	C1102	*E2	C1608	A4	CL915	C1	F101	C5	L690	B4
C318	*G5	C624	A3	C1103	*E1	C1609	*A4	CL916	C1			L790	D3
C319	*G5	C625	*B3	C1104	*E2	C1610	*A5	CL917	B1	FL300	G5	L1490	B3
C320	*G5	C626	*B4	C1105	*E1	C1611	*B5	CL918	B1	FL301	G4	L1590	D2
C321	*G5	C627	*B3	C1106	*E2	C1612	*A4	CL919	B1	FL302	G4	L1690	*B5
C322	*G5	C628	A4	C1107	*E2	C1613	*B5	CL920	B1	FL303	G4	L1790	D4
C323	*F5	C629	A4	C1108	*B2	C1614	*A5	CL921	C1	FL304	G4		
C324	*G4	C630	A4	C1109	*E2	C1615	*B5	CL930	C1	FL930	*C3	Q200	*E4
C325	*G4	C690	*A4	C1110	*F1	C1616	*B5	CL931	C1	FL1030	C5	Q201	*E4
C326	*E5	C691	*B4	C1111	*E1	C1618	A5	CL932	C1	FL1031	C5	Q202	*E4
C327	*G5	C692	B4	C1112	*F2	C1619	*B5	CL933	C1	FL1032	D5	Q203	*E4
C328	*F4	C700	*E3	C1113	*F1	C1620	*B4	CL934	C1	FL1033	D5	Q300	*G5
C329	*F4	C701	D4	C1114	*E2	C1621	B5	CL935	C1	FL1034	C5	Q301	*G4
C330	*G5	C702	D3	C1115	*E1	C1622	B5	CL1000	B3	FL1035	C5	Q302	*G4
C331	*G4	C703	D3	C1116	*G2	C1623	A5	CL1001	B4	FL1036	C5	Q303	*G4
C332	*G4	C704	D3	C1117	*G2	C1624	B5	CL1002	D4	FL1037	D5	Q304	*G4
C333	*G5	C705	*D4	C1118	*F2	C1625	A4	CL1003	D4	FL1038	D5	Q305	*G4
C334	*G6	C706	D3	C1119	*E2	C1626	A4	CL1004	D3	FL1039	B5	Q306	*G3
C400	A1	C707	D3	C1120	*F2	C1627	*B4	CL1005	D3	FL1040	B5	Q307	*G4
C401	A1	C708	*D3	C1121	*F2	C1628	*B4	CL1006	C3	FL1041	C5	Q308	*G4
C402	A2	C709	*D3	C1122	*E2	C1629	*B4	CL1007	C3	FL1042	C5	Q309	*G4
C403	A2	C711	D3	C1123	*F2	C1690	*A5	CL1008	C3	FL1043	C5	Q310	*G4
C404	*A1	C712	*D3	C1124	*G2	C1691	*B5	CL1009	C3	FL1044	B5	Q311	*G4
C405	A1	C713	D3	C1125	*E3	C1692	B5	CL1010	C3	FL1045	B5	Q312	*G4
C406	A1	C714	D3	C1126	*E2	C1700	*E4	CL1011	C3	FL1046	C5	Q313	*F4
C407	*A1	C715	D3	C1127	*E2	C1701	D5	CL1012	C3	FL1047	C5	Q314	*F4
C408	*A1	C716	D3	C1128	*F3	C1702	D4	CL1013	C3	FL1048	C5	Q490	*B2
C410	A2	C717	D4	C1129	*E2	C1703	D4	CL1014	C3			Q491	*B2
C411	*B1	C718	D4	C1130	*G2	C1704	D4	CL1015	C3	IC100	F3	Q590	*D1
C412	B2	C719	*D4	C1131	G2	C1705	*D5	CL1016	C3	IC101	*F3	Q591	*D1
C413	B2	C720	*D3	C1132	G2	C1706	D4	CL1017	B3	IC200	F5	Q600	*A5
C414	A2	C721	*D3	C1133	*G2	C1707	D4	CL1018	B3	IC201	E5	Q690	*B4
C415	B2	C722	*E4	C1134	*E3	C1708	*D4	CL1019	B3	IC202	F5	Q691	*B4
C416	A1	C723	D4	C1135	*E3	C1709	*D4	CL1020	B3	IC203	F4	Q700	*E3
C417	A1	C724	E4	C1136	*G1	C1711	D4	CL1021	C3	IC204	D5	Q701	*E3
C418	*B1	C790	*D3	C1137	*G1	C1712	*D4	CL1030	C3	IC205	E5	Q702	*E3
C419	*B2	C791	*D3	C1138	*F1	C1713	D4	CL1031	C3	IC206	F4	Q790	*D3

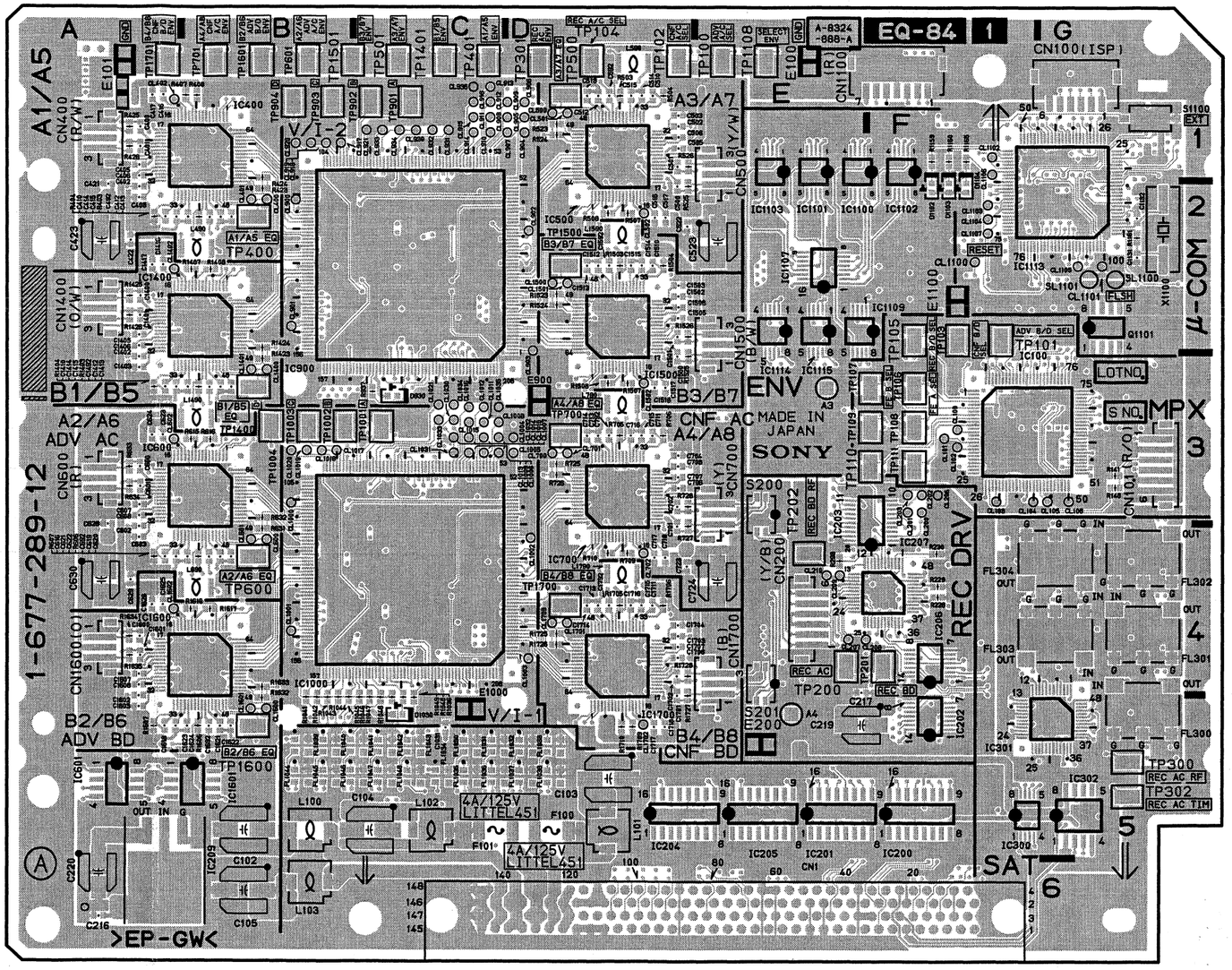

EQ-84 -A SIDE-
SUFFIX: -12

4-42 (a)

EQ-84
SUFFIX: -12

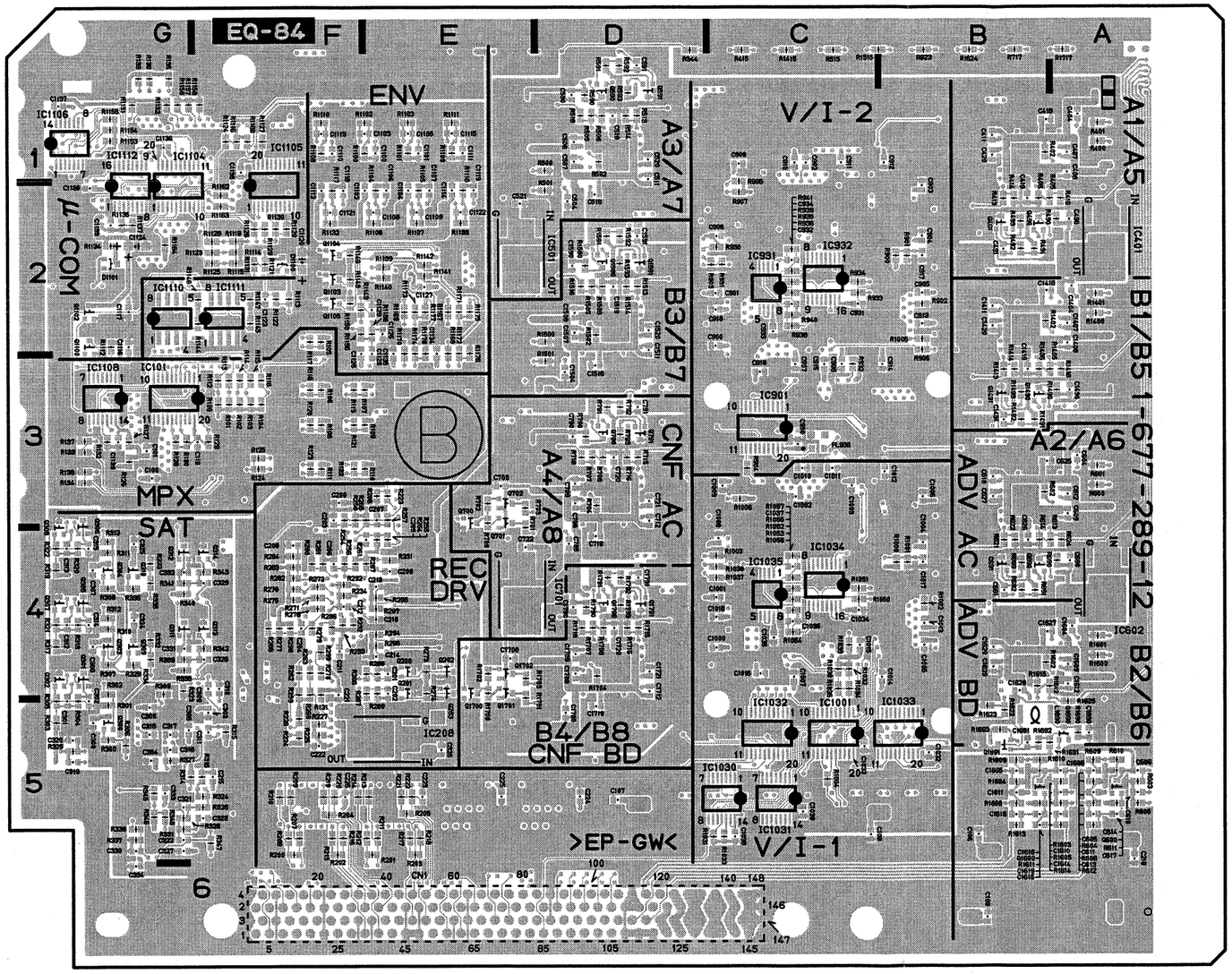

EQ-84 -B SIDE-
SUFFIX: -12

Q791	*D3	R230	F4	R345	*G5	R727	D4	R1131	*F2	R1602	*B4	TP1004	B3		
Q1100	*G2	R231	*E4	R346	*G5	R728	D3	R1132	*F2	R1603	*A5	TP1108	E1		
Q1101	G2	R232	*F4	R347	*F5	R790	*D3	R1133	*E2	R1604	*B5	TP1400	B3		
Q1102	*G2	R233	*F4	R348	*G5	R791	*D3	R1134	*G2	R1605	*A5	TP1401	C1		
Q1103	*F2	R234	*F4	R400	*A1	R792	*D3	R1135	*G2	R1606	B5	TP1500	D2		
Q1104	*F2	R254	*F3	R401	*A1	R793	*D3	R1136	*F2	R1607	A5	TP1501	B1		
Q1105	*F2	R255	*E4	R402	*B1	R900	*B2	R1137	*G2	R1608	*B5	TP1600	B5		
Q1490	*B3	R256	*F4	R403	B2	R901	*B2	R1138	*E2	R1609	*B5	TP1601	B1		
Q1491	*B3	R257	*E3	R404	A2	R902	*B2	R1139	*E2	R1610	*B5	TP1700	D4		
Q1590	*D2	R258	*F3	R405	*B2	R903	*C2	R1140	*E2	R1611	*B5	TP1701	A1		
Q1591	*D2	R259	*F4	R406	*B2	R904	*C3	R1141	*E2	R1612	*B4				
Q1600	*B5	R260	*F4	R407	B1	R905	*B2	R1142	*E2	R1613	*B5	X1100	G2		
Q1690	*A5	R261	*F4	R408	B1	R906	*C2	R1143	*F2	R1614	*A5				
Q1691	*B5	R262	*F4	R413	*B2	R907	*C2	R1144	*F2	R1615	*B4	*:B SIDE			
Q1700	*E4	R263	*F4	R414	*B2	R930	*C2	R1145	*F2	R1616	B4				
Q1701	*E4	R264	*E4	R415	*C1	R931	*C2	R1146	*F2	R1617	B4				
Q1702	*E4	R265	*E3	R416	*A2	R932	*C3	R1147	*F2	R1622	*B5				
Q1790	*D4	R266	*E4	R423	B2	R933	*C2	R1148	*F2	R1623	*B5				
Q1791	*D4	R267	*E4	R424	B1	R934	*C2	R1149	*F2	R1624	*B1				
		R268	*E4	R425	A1	R935	*C2	R1150	*F2	R1625	*A5				
R100	*F3	R269	*E4	R426	A1	R936	*C2	R1151	*G1	R1632	B5				
R101	*F3	R270	*F4	R490	*A2	R937	C3	R1152	*G1	R1633	B4				
R102	*F3	R271	*F4	R491	*B2	R938	*C2	R1153	*G1	R1634	A4				
R103	*F3	R272	*F4	R492	*B2	R939	*C2	R1154	*G1	R1635	A4				
R104	*F3	R273	*E4	R493	*B2	R940	*C2	R1155	*G1	R1690	*A5				
R105	*F2	R274	*E4	R500	*D1	R941	*C2	R1156	*G1	R1691	*B5				
R106	*F3	R275	*F4	R501	*D2	R1000	*B4	R1157	*G1	R1692	*B5				
R107	*E3	R276	*F4	R502	*D1	R1001	*B4	R1158	*F1	R1693	*B5				
R108	*F3	R277	*F4	R503	D1	R1002	*B4	R1159	F1	R1700	*E4				
R109	*E3	R278	*F4	R504	D1	R1003	*C4	R1160	F1	R1701	*E5				
R110	*E3	R279	*F4	R505	*D1	R1004	*C5	R1161	G2	R1702	*E4				
R111	*F3	R280	*F4	R506	*D1	R1005	*B2	R1162	*F2	R1703	*E4				
R112	*F3	R281	*F4	R507	D2	R1006	*C3	R1163	*F2	R1704	*D4				
R113	*F3	R282	*F4	R508	D2	R1030	*C4	R1164	*G2	R1705	D4				
R114	*F3	R283	*F4	R513	*D1	R1031	*C5	R1165	F1	R1706	D4				
R115	*F3	R284	*F4	R514	*D1	R1032	*C4	R1166	*F1	R1707	*D4				
R116	*F3	R286	*F4	R515	*C1	R1033	*C5	R1167	*E2	R1708	*D4				
R117	*F2	R287	*E4	R516	*D1	R1034	*C4	R1168	*E3	R1709	D5				
R118	*F3	R288	*F4	R523	D1	R1035	*C4	R1169	*E2	R1710	D5				
R119	*F3	R292	*F4	R524	D1	R1036	C5	R1170	*E3	R1715	*D4				
R120	*F3	R293	E4	R525	D2	R1037	*C4	R1171	*E2	R1716	*D4				
R121	*F3	R294	*E4	R526	D1	R1038	*C4	R1172	*E3	R1717	*A1				
R122	*F3	R295	*E4	R590	*D1	R1039	*C4	R1173	*E2	R1718	*D4				
R123	*F3	R296	*E4	R591	*D1	R1040	C5	R1174	*E3	R1725	D4				
R124	*F3	R297	*E4	R592	*D1	R1041	B5	R1175	*E2	R1726	D4				
R125	*F3	R298	*F4	R593	*D1	R1042	B5	R1176	*E2	R1727	D5				
R126	*G3	R299	*F4	R600	*A3	R1043	B5	R1177	*E2	R1728	D4				
R127	*G3	R300	*G5	R601	*A3	R1044	B5	R1178	*E3	R1790	*D4				
R128	*G3	R301	*G5	R602	*B3	R1045	B5	R1400	*A2	R1791	*D4				
R129	*F3	R302	*G4	R603	*A5	R1046	C5	R1401	*A2	R1792	*D4				
R130	*G3	R303	*G5	R604	*A5	R1047	C5	R1402	*B2	R1793	*D4				
R131	*F4	R304	*G5	R605	*A5	R1048	C5	R1403	B3						
R132	*G3	R305	*G5	R606	B4	R1049	C5	R1404	A3	S200	E3				
R133	*G3	R306	*G5	R607	A4	R1050	*C4	R1405	*B3	S201	E4				
R134	*G3	R307	*G4	R608	*A5	R1051	*C4	R1406	*B3	S1100	G1				
R135	*G1	R308	*G4	R609	*A5	R1052	*C4	R1407	B2						
R136	*G1	R309	*G4	R610	*A5	R1053	*C4	R1408	B2	SL1100	G2				
R137	*G3	R310	*G4	R611	*A5	R1054	*C4	R1413	*B3	SL1101	G2				
R138	*G3	R311	*G4	R612	*A5	R1055	*C4	R1414	*B3						
R139	*G1	R312	*G4	R613	*B4	R1056	*C4	R1415	*C1	TP100	E1				
R140	G3	R313	*G4	R614	*B4	R1057	*C4	R1416	*A3	TP101	F2				
R141	G3	R314	*G5	R615	B3	R1100	*E1	R1423	B3	TP102	D1				
R200	*F5	R315	*F5	R616	B3	R1101	*E1	R1424	B2	TP103	F2				
R201	*E5	R316	*F5	R621	*B4	R1102	*E1	R1425	A2	TP104	D1				
R202	*F5	R317	*G4	R622	*B4	R1103	*E1	R1426	A2	TP105	F2				
R203	*E5	R318	*G4	R623	*B1	R1104	*E2	R1490	*A3	TP106	F3				
R204	*F5	R319	*G4	R624	*A4	R1105	*E2	R1491	*B3	TP107	F3				
R205	*E5	R320	*G4	R631	B4	R1106	*E2	R1492	*B3	TP108	F3				
R206	*E3	R321	*G4	R632	B3	R1107	*E2	R1493	*B3	TP109	F3				
R207	*F5	R322	*G4	R633	A3	R1108	*F1	R1500	*D2	TP110	F3				
R208	*F5	R323	*G4	R634	A3	R1109	*E1	R1501	*D3	TP111	F3				
R209	*F5	R324	*F5	R690	*A4	R1110	*F1	R1502	*D2	TP200	E4				
R210	*F5	R325	*G5	R691	*B4	R1111	*E1	R1503	D2	TP201	F4				
R211	*E5	R326	*F5	R692	*B4	R1112	*G2	R1504	D2	TP202	E4				
R212	*E5	R327	*G5	R693	*B4	R1113	*F2	R1505	*D2	TP300	G5				
R213	*E5	R328	*G5	R700	*E3	R1114	*F2	R1506	*D2	TP301	D1				
R214	*F5	R329	*G4	R701	*E4	R1115	*F2	R1507	D3	TP302	G5				
R215	*F5	R330	*G4	R702	*E3	R1116	*F1	R1508	D3	TP400	B2				
R216	*F5	R331	*G5	R703	*E3	R1117	*F2	R1513	*D2	TP401	C1				
R217	*E5	R332	*G4	R704	*D3	R1118	*E2	R1514	*D2	TP500	D1				
R218	*E5	R333	*G4	R705	D3	R1119	*F2	R1515	*B1	TP501	C1				
R219	*F5	R334	*G4	R706	D3	R1120	*F2	R1516	*D2	TP600	B4				
R220	*F5	R335	*G4	R707	*D3	R1121	*F2	R1523	D2	TP601	B1				
R221	*E5	R336	*G5	R708	*D3	R1122	*F2	R1524	D2	TP700	D3				
R222	*E5	R337	*G5	R709	D4	R1123	*F2	R1525	D3	TP701	B1				
R223	*E3	R338	*G4	R710	D4	R1124	*F1	R1526	D2	TP901	C1				
R224	*F5	R339	*G4	R715	*D3	R1125	*F2	R1590	*D2	TP902	C1				
R225	*F5	R340	*G4	R716	*D3	R1126	*F2	R1591	*D2	TP903	B1				
R226	*F5	R341	*G4	R717	*B1	R1127	*F1	R1592	*D2	TP904	B1				
R227	*F5	R342	*F4	R718	*D3	R1128	*F2	R1593	*D2	TP1001	C3				
R228	F4	R343	*F4	R725	D3	R1129	*F2	R1600	*A4	TP1002	B3				
R229	F4	R344	*D1	R726	D3	R1130	*F2	R1601	*A4	TP1003	B3				

FP-133
SUFFIX: -12, 13

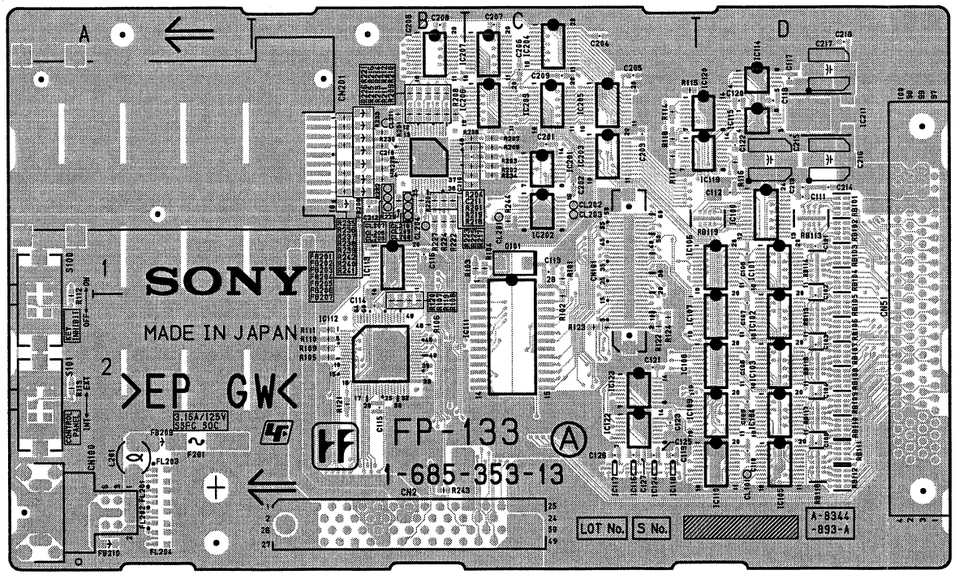

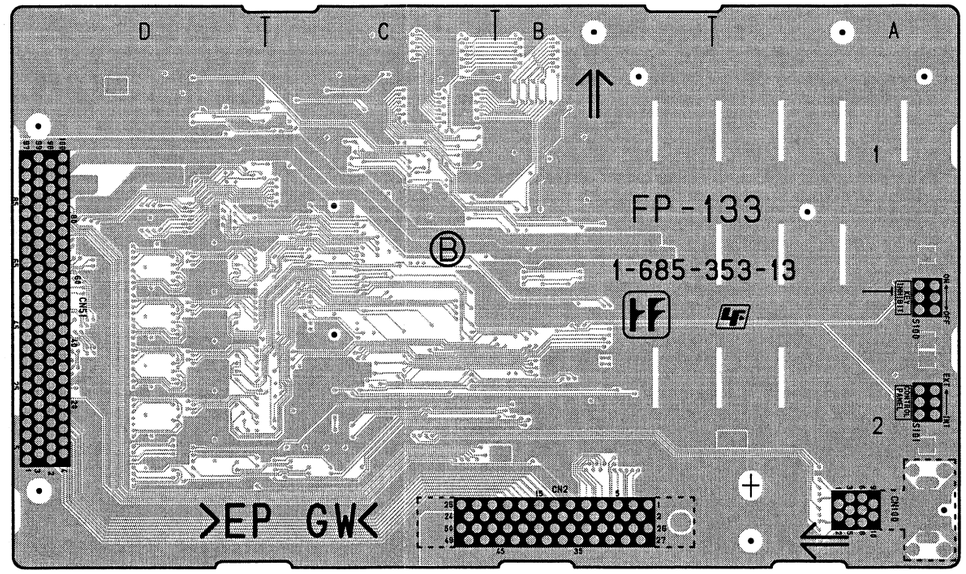

FP-133 -A SIDE-
SUFFIX: -12, 13

FP-133 -B SIDE-
SUFFIX: -12, 13

FP-133 (1-685-353-12,13)

C101	D1	C212	B1	FB207	B1	IC204	C1	R203	C1	R240	B1
C102	D2	C213	D1	FB208	B1	IC205	C1	R204	C1	R241	B1
C103	D2	C214	D1	FB209	A2	IC206	C1	R205	C1	R242	B1
C104	D2	C215	D1	FB210	A2	IC207	C1	R206	C1	R243	B2
C105	D2	C216	D1			IC208	B1	R207	C1	R244	C1
C106	D1	C217	D1	FL201	A2	IC209	C1	R208	B1		
C107	D2	C218	D1	FL202	A2	IC210	B1	R209	B1	RB101	D1
C108	D2			FL203	A2	IC211	D1	R210	B1	RB102	D1
C109	D2	CL101	D2	FL204	A2			R211	B1	RB103	D1
C110	D2	CL201	C1			L201	A2	R212	B1	RB104	D1
C111	D1	CL202	C1	IC100	D1			R213	B1	RB105	D2
C112	D1	CL203	C1	IC101	D1	R101	C1	R214	B1	RB106	D2
C113	C1	CL204	B1	IC102	D2	R102	C2	R215	B1	RB107	D2
C114	B2	CL205	B1	IC103	D2	R103	C1	R216	B1	RB108	D2
C115	B2	CL206	B1	IC104	D2	R104	C1	R217	B1	RB109	D2
C116	B1	CL207	B1	IC105	D2	R105	B2	R218	C1	RB110	D2
C117	D1	CL208	B1	IC106	D1	R106	B2	R219	C1	RB111	D2
C118	D1	CL209	B1	IC107	D2	R107	B2	R220	B1	RB112	D2
C119	C2	CL210	B1	IC108	D2	R108	B2	R221	B1	RB113	D1
C120	D1	CL211	B1	IC109	D2	R109	B2	R222	B1	RB114	D1
C121	C2			IC110	D2	R110	B2	R223	B1	RB115	D2
C122	D1	CN2	B2	IC111	C1	R111	B2	R224	B1	RB116	D2
C123	C2	CN51	D2	IC112	B2	R112	A2	R225	B1	RB117	D2
C125	C2	CN100	A2	IC113	B1	R113	A2	R226	B1	RB118	D2
C126	C2	CN101	C1	IC114	D1	R114	C1	R227	B1	RB119	D1
C127	C2	CN201	B1	IC115	D1	R115	C1	R228	B1		
C201	C1			IC116	C2	R116	D1	R229	B1	S100	A2
C202	C1	D101	C1	IC117	C2	R117	C1	R230	B1	S101	A2
C203	C1			IC118	C2	R118	C1	R231	B1		
C204	C1	F201	A2	IC119	C1	R119	B2	R232	B1		
C205	C1			IC120	C1	R120	B2	R233	B1		
C206	C1	FB201	B1	IC122	C2	R121	B2	R234	C1		
C207	C1	FB202	B1	IC123	C2	R122	C2	R235	B1		
C208	B1	FB203	B1	IC124	C2	R123	C2	R236	B1		
C209	C1	FB204	B1	IC201	C1	R124	C2	R237	B1		
C210	B1	FB205	B1	IC202	C1	R201	C1	R238	B1		
C211	C1	FB206	B1	IC203	C1	R202	C1	R239	B1		

FP-133
SUFFIX: -11

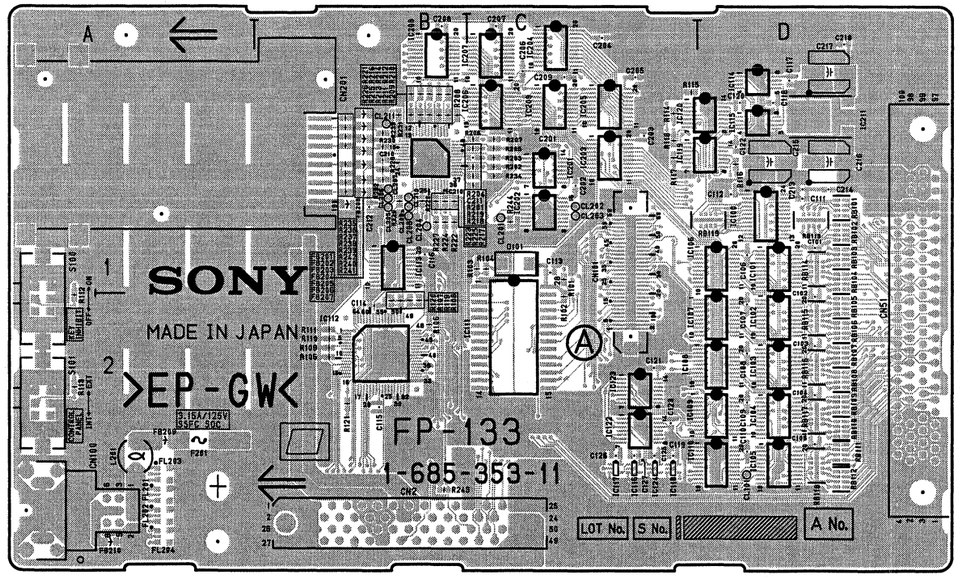

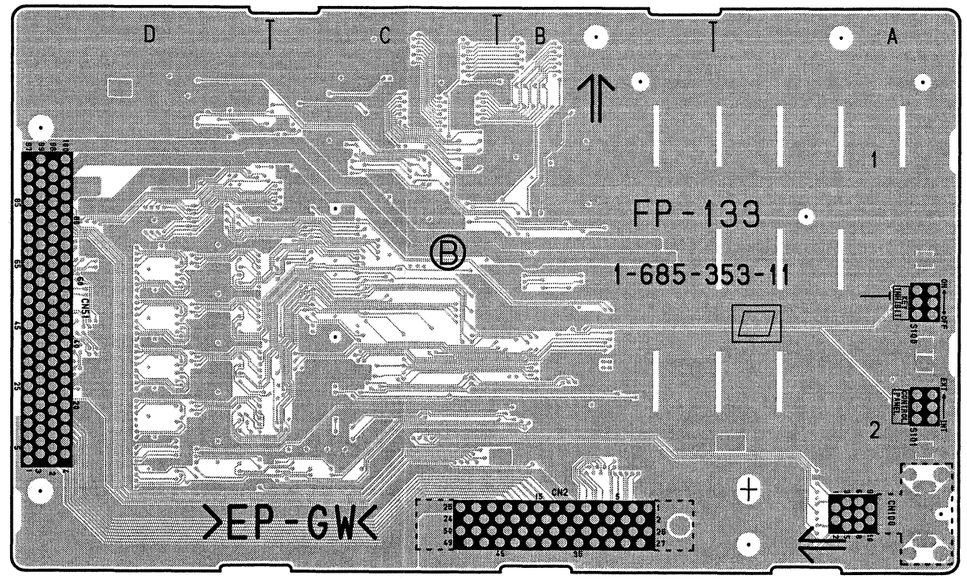

FP-133 -A SIDE-
SUFFIX: -11

FP-133 -B SIDE-
SUFFIX: -11

FP-133 (1-685-353-11)

C101	D1	C212	B1	FB207	B1	IC204	C1	R206	C1	R243	B2
C102	D2	C213	D1	FB208	B1	IC205	C1	R207	C1	R244	C1
C103	D2	C214	D1	FB209	A2	IC206	C1	R208	B1		
C104	D2	C215	D1	FB210	A2	IC207	C1	R209	B1	RB101	D1
C105	D2	C216	D1			IC208	B1	R210	B1	RB102	D1
C106	D1	C217	D1	FL201	A2	IC209	C1	R211	B1	RB103	D1
C107	D2	C218	D1	FL202	A2	IC210	B1	R212	B1	RB104	D1
C108	D2			FL203	A2	IC211	D1	R213	B1	RB105	D2
C109	D2	CL101	D2	FL204	A2			R214	B1	RB106	D2
C110	D2	CL201	C1			L201	A2	R215	B1	RB107	D2
C111	D1	CL202	C1	IC100	D1			R216	B1	RB108	D2
C112	D1	CL203	C1	IC101	D1	R101	C1	R217	B1	RB109	D2
C113	C1	CL204	B1	IC102	D2	R102	C2	R218	C1	RB110	D2
C114	B2	CL205	B1	IC103	D2	R103	C1	R219	C1	RB111	D2
C115	B2	CL206	B1	IC104	D2	R104	C1	R220	B1	RB112	D2
C116	B1	CL207	B1	IC105	D2	R105	B2	R221	B1	RB113	D1
C117	D1	CL208	B1	IC106	D1	R106	B2	R222	B1	RB114	D1
C118	D1	CL209	B1	IC107	D2	R107	B2	R223	B1	RB115	D2
C119	C2	CL210	B1	IC108	D2	R108	B2	R224	B1	RB116	D2
C120	D1	CL211	B1	IC109	D2	R109	B2	R225	B1	RB117	D2
C121	C2			IC110	D2	R110	B2	R226	B1	RB118	D2
C122	D1	CN2	B2	IC111	C1	R111	B2	R227	B1	RB119	D1
C123	C2	CN51	D2	IC112	B2	R112	A2	R228	B1		
C125	C2	CN100	A2	IC113	B1	R113	A2	R229	B1	S100	A2
C126	C2	CN101	C1	IC114	D1	R114	C1	R230	B1	S101	A2
C127	C2	CN201	B1	IC115	D1	R115	C1	R231	B1		
C201	C1			IC116	C2	R116	D1	R232	B1		
C202	C1	D101	C1	IC117	C2	R117	C1	R233	B1		
C203	C1			IC118	C2	R118	C1	R234	C1		
C204	C1	F201	A2	IC119	C1	R119	B2	R235	B1		
C205	C1			IC120	C1	R120	B2	R236	B1		
C206	C1	FB201	B1	IC122	C2	R121	B2	R237	B1		
C207	C1	FB202	B1	IC123	C2	R201	C1	R238	B1		
C208	B1	FB203	B1	IC124	C2	R202	C1	R239	B1		
C209	C1	FB204	B1	IC201	C1	R203	C1	R240	B1		
C210	B1	FB205	B1	IC202	C1	R204	C1	R241	B1		
C211	C1	FB206	B1	IC203	C1	R205	C1	R242	B1		

FP-134 (1-685-354-11,12)

C101	B1
C102	B1
C103	B2
C104	A2
C105	A2
C106	A2
C107	B2
C108	B2
C109	A2
CN3	A2
CN101	*A1
IC101	B2
IC102	A2
IC103	A2
IC104	A2
IC105	B2
IC106	B2
R101	B1
R102	B1
R103	A2
R104	A2
R105	A2
R106	A2
R107	B2
R108	B2
R109	A2
R110	B2
R111	A2
R112	A2
R113	A2
R114	A2
R115	B2
R116	B2
R117	B2
R118	A2
R119	B2
R120	B2
RB101	B2

*:B SIDE

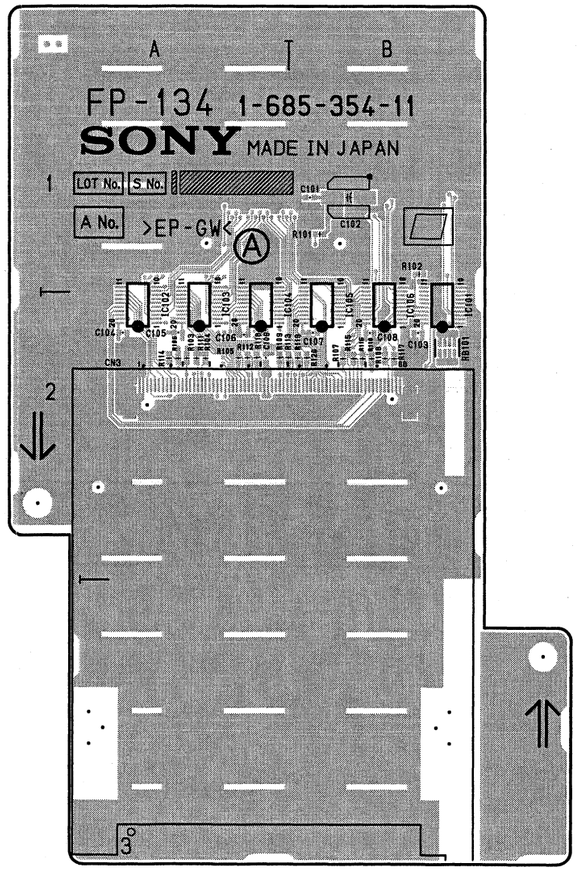

FP-134 -A SIDE-
SUFFIX: -11, 12

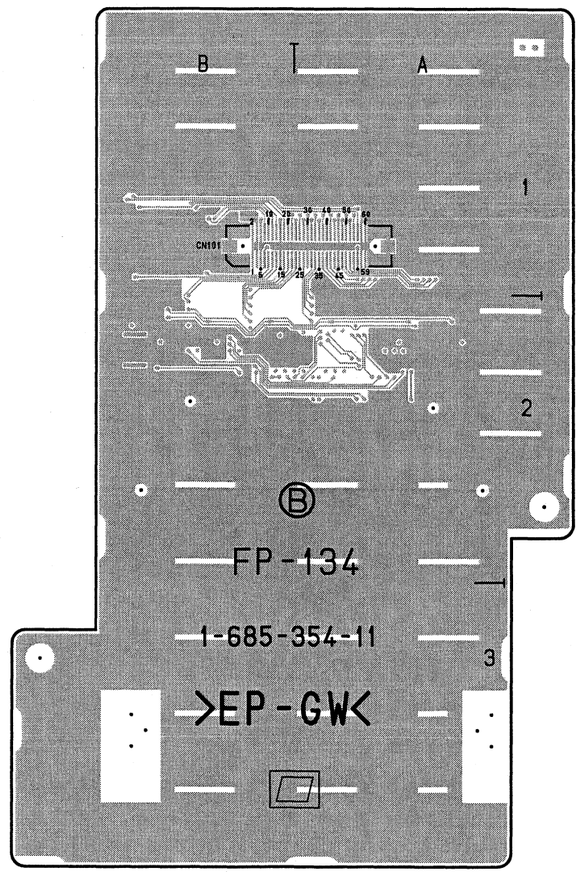

FP-134 -A SIDE-
SUFFIX: -11, 12

HIF-1 (1-679-847-24)

C100	B3	C344	*M4	C610	*M2	C817	*P4	C909	*C1	C1072	*A5	CL321	K5	CL718	N4	FB800	N5	IC811	P3	R109	J5	R272	*K1	R739	*N4	R833	*P5	R1001	*D5	RB218	*K1	RB941	B3
C101	B3	C345	*M4	C611	*M2	C818	*P4	C910	*D2	C1100	M4	CL322	K5	CL719	N5	FB801	N5	IC812	P3	R110	*H5	R273	*K1	R740	*N4	R834	*N5	R1003	*B5	RB219	*K1	RB942	*C1
C102	J5	C346	*L4	C612	*N2	C819	*P4	C911	*D3	C1101	M4	CL323	K5	CL720	N5	FB802	*P4	IC813	*P3	R111	*J5	R300	J5	R741	N4	R835	*P5	R1004	*C5	RB220	J1	RB943	B3
C103	H5	C347	*L4	C613	*N2	C820	*N4	C912	*G1	C1102	*G5	CL324	K5	CL721	N4	FB803	*N4	IC814	*P3	R112	*H5	R301	J5	R742	N5	R836	*P5	R1005	*C4	RB221	K1	RB944	*B2
C104	J5	C348	J5	C614	*N2	C821	*N4	C913	*D1	C1103	*G5	CL325	K5	CL722	N5	FB804	*N4	IC815	*P3	R113	*H5	R302	K2	R743	N5	R837	*P2	R1006	*C4	RB222	K1	RB945	*F5
C105	E5	C349	*J4	C615	*L2	C822	*N5	C914	*D3	C1104	*E5	CL326	K5	CL723	N5	FB805	*P3	IC816	*P3	R114	H5	R303	K2	R744	N5	R838	*N5	R1007	*F5	RB223	K1	RB946	*F5
C106	*E5	C351	*J4	C617	*N1	C823	N5	C915	*G1	C1105	*G5	CL327	K5	CL724	N5	FB806	*P3	IC817	*P3	R115	H5	R304	J3	R745	N5	R839	*N4	R1008	*F5	RB224	*L2	RB947	*G5
C107	*E5	C352	*K4	C618	*N2	C824	*N4	C916	*D2	C1106	*B4	CL328	K5	CL725	P5	FB807	*N3	IC818	*P3	R116	*H5	R305	J3	R746	N5	R840	*P4	R1009	*C4	RB300	K2	RB948	*G5
C108	*F5	C353	*K4	C619	*N2	C825	*N4	C917	*C1	C1800	P3	CL329	K5	CL726	P5	FB808	*P3	IC819	*P3	R117	*H5	R306	K3	R747	N5	R841	*P5	R1016	*B4	RB301	K2	RB949	B3
C109	*D5	C354	*K4	C620	*M2	C826	*N4	C918	*D3	C1801	P3	CL330	K5	CL727	P5	FB809	P2	IC820	*P3	R118	J5	R307	*J3	R748	N5	R842	P3	R1021	*C4	RB302	J2	RB950	*B2
C110	L6	C355	*L5	C621	*M2	C827	*N4	C919	D5	C1802	N3	CL331	*J4	CL728	P5	FB810	P2	IC821	*P3	R119	J5	R308	J3	R749	N5	R843	P3	R1022	*C4	RB303	J2	RB951	D2
C111	L6	C356	*L3	C622	*M2	C828	*N4	C920	*D2	C1803	*P3	CL332	*J4	CL729	P5			IC822	*N3	R120	J5	R309	J3	R750	N5	R844	P3	R1023	*C4	RB304	J2	RB952	D2
C112	K6	C358	*L3	C623	*M2	C829	N5	C921	*D3	C1804	*N3	CL333	*J4	CL730	P5	IC100	*B4	IC823	*N3	R121	J5	R310	*K5	R751	N5	R845	*P3	R1026	*D5	RB305	K3	RB963	*C2
C113	C3	C359	*L3	C624	*M2	C830	N5	C922	*D2	C1805	P3	CL334	*J4	CL800	P5	IC101	*B4	IC824	*N3	R122	*J5	R311	*K5	R752	N5	R846	*P3	R1027	*D5	RB306	J3	RB966	C1
C114	C3	C360	*L4	C625	*M1	C831	N5	C923	*F5	C1806	P2	CL335	J4	CL801	P5	IC102	*J5	IC825	*P2	R123	*J5	R312	*K5	R753	N4	R847	*P4	R1028	D4	RB307	*J3	RB967	*C2
C200	*F4	C361	*L5	C626	*M1	C832	N5	C924	*C2	C1808	P3	CL336	J4	CL802	*P4	IC103	*H5	IC826	*P2	R124	*J5	R313	*K5	R754	N4	R848	*P4	R1700	*D4	RB308	K3	RB968	B1
C201	*F5	C500	*F2	C627	*M1	C833	*N4	C925	*C5	C1809	P3	CL337	*J4	CL803	P5	IC104	*J5	IC827	P1	R125	*J5	R500	*G3	R755	N4	R849	*P4	R1701	*D4	RB309	*K5	RB969	C1
C202	*L1	C501	*G2	C628	*M3	C834	N5	C926	*C1	C1810	N3	CL338	*J4	CL804	*P5	IC105	E5	IC828	*P2	R126	*B4	R501	*G3	R756	*N4	R850	P3	R1702	*D4	RB500	G2	RB977	C1
C203	*L2	C502	*G2	C629	*N3	C835	N5	C927	*C1	C1811	P3	CL339	J5	CL805	*P5	IC106	*E5	IC829	*P2	R127	*C4	R502	*G3	R757	*P4	R851	P3	R1703	*D4	RB501	G2	RB979	*B2
C204	F4	C503	*G2	C630	*N3	C836	N5	C928	*B3			CL340	J5	CL806	N5	IC107	*E5	IC830	*P2	R128	*C4	R503	*G3	R758	*P4	R852	P3	R1704	*D4	RB502	G1	RB980	L2
C205	*F4	C504	*G2	C631	*N3	C837	*N5	C929	*C3	CL200	*K2	CL341	J5	CL807	P5	IC108	*F5	IC831	P2	R129	*F5	R504	*G3	R759	*P4	R853	*P3	R1705	*D4	RB503	G2	RB1100	M4
C206	*F4	C505	*G2	C632	*N3	C838	*N5	C930	*B2	CL201	*J2	CL342	J5	CL808	P5	IC109	*E5	IC900	*B3	R130	*F5	R505	*G3	R760	*P5	R854	P3	R1706	*D4	RB504	G2	RB1101	M4
C207	E4	C506	*G2	C633	*M3	C839	*N5	C931	*C2	CL202	K2	CL500	*G2	CL809	P5	IC110	L5	IC901	*B2	R200	J2	R506	*G3	R761	*P5	R855	P3	R1707	*D4	RB505	D4	RB1102	M4
C208	*L1	C507	*G2	C634	N3	C840	*N4	C932	*B3	CL203	K2	CL501	*G2	CL810	P5	IC111	L5	IC902	*B2	R201	J2	R600	*N1	R762	*P5	R856	*P3	R1708	*H4	RB506	D4	RB1103	M4
C209	*L2	C508	*G2	C635	N3	C841	*N5	C933	*B2	CL204	K2	CL502	*G2	CL811	P5	IC112	L5	IC903	*B2	R202	J2	R601	N1	R763	*P5	R857	P3	R1709	*H4	RB507	D4	RB1104	G5
C210	F4	C509	*G2	C636	M3	C842	*N5	C934	*C2	CL205	K2	CL503	*G2	CL812	P5	IC113	*C4	IC904	*F5	R203	J1	R602	*N1	R764	*P5	R858	*P3	R1710	*H4	RB508	E4	RB1105	G5
C211	*K2	C510	*F2	C637	*M2	C843	*N5	C935	*C3	CL206	*J2	CL504	*F2	CL813	P4	IC114	*C4	IC905	*F1	R204	J1	R603	*N1	R765	*P4	R859	P1	R1711	*H4	RB509	E4	RB1106	*G5
C212	*K1	C511	*G2	C638	*N2	C844	*N5	C936	*C2	CL207	*J2	CL505	*G2	CL814	P4	IC200	K2	IC906	*F1	R205	J1	R604	M1	R766	*P4	R860	P1	R1712	*H4	RB510	D4	RB1107	*G5
C213	*J2	C512	*G2	C639	*M2	C845	*N4	C937	*C2	CL208	J1	CL506	*F2	CL815	P4	IC201	*L1	IC907	*B1	R207	K2	R605	*N2	R767	*P4	R861	P1	R1713	*H4	RB511	G4	RB1108	E4
C214	*K2	C513	*G2	C640	*M2	C846	*P5	C938	*B2	CL209	*J1	CL507	*F2	CL816	P4	IC202	*E5	IC908	F1	R208	K2	R606	N1	R768	*P4	R862	*P3	R1714	*H4	RB512	F4	RB1109	*G5
C215	*K2	C514	*G2	C641	*N2	C847	*N5	C939	*B2	CL210	*G2	CL508	*G2	CL817	P4	IC203	*F5	IC909	C2	R209	K2	R607	N1	R769	*N5	R863	*P3	R1716	*H4	RB513	F4	RB1110	*F5
C216	*K1	C515	*G2	C642	N2	C848	*P2	C940	C4	CL211	*G2	CL509	*G2	CL818	P4	IC204	*L2	IC910	*G1	R210	K2	R608	N1	R770	*M5	R864	*P3	R1717	*H4	RB514	G4	RB1111	G5
C217	*J1	C516	*G2	C646	*M3	C849	*P2	C941	*C2	CL212	*J2	CL510	*G2	CL819	P4	IC205	E5	IC911	D2	R211	K2	R609	*N1	R771	*N4	R865	*P3	R1718	*K5	RB515	G4	RB1112	G5
C218	*J2	C517	*F2	C700	*P5	C850	*N5	C942	*C2	CL213	*J2	CL511	*G2	CL820	P4	IC206	L1	IC912	*C1	R212	K2	R610	*N1	R772	*M4	R866	*N3	R1719	*K5	RB516	G4	RB1113	G5
C219	*K2	C518	*F2	C701	*P5	C851	*N5	C943	*C2	CL214	J1	CL512	*G2	CL821	P4	IC208	E4	IC913	E5	R213	*J2	R611	M1	R773	*M4	R867	*N3	R1720	*K5	RB600	M3		
C220	*K1	C519	E3	C702	N5	C852	*P2	C944	*C2	CL215	J1	CL513	*G2	CL822	P5	IC209	*J5	IC914	*D5	R214	*J2	R612	*P1	R774	*M4	R868	*P2	R1721	*K5	RB601	N3	RV800	P2
C221	*J2	C520	E2	C703	*P4	C853	*N2	C945	*C2	CL216	K1	CL514	*G1	CL823	P5	IC300	K4	IC915	*C5	R215	*J2	R613	*P1	R775	B4	R869	*P2	R1722	*K5	RB602	M3	RV801	P2
C222	*K2	C521	F3	C704	*P4	C854	*N5	C946	*A2	CL217	*K2	CL515	*G1	CL824	N4	IC301	*L4	IC916	C4	R216	*J2	R614	*P1	R776	B4	R900	D2	R1729	*H4	RB603	M3		
C223	*K2	C522	*F2	C705	*P5	C855	*P2	C981	*L2	CL218	*K2	CL516	*G2	CL825	N4	IC302	L3	IC917	D2	R217	*J2	R615	*P1	R777	B4	R901	*B2	R1730	*G2	RB604	N3	S900	C1
C226	*D1	C523	F2	C706	*P5	C856	*N5	C1000	A3	CL219	*K2	CL517	*G2	CL826	N5	IC303	L4	IC918	*G5	R218	*J2	R616	N1	R778	B4	R902	C3	R1738	*K5	RB605	N3		
C227	*D1	C524	F1	C707	*P4	C857	*N5	C1001	*A5	CL220	*J1	CL518	*F4	CL900	J6	IC304	L4	IC919	*D5	R219	*J1	R617	M1	R779	*D5	R903	C3	R1739	*H2	RB606	M3	TP100	P5
C228	*D1	C525	E2	C708	*P4	C858	*P4	C1002	*A4	CL221	*J2	CL519	*G3	CL901	J6	IC305	L5	IC920	*A2	R220	*J1	R618	M1	R780	B4	R904	*C2	R1740	*H2	RB607	M3	TP101	N5
C229	J4	C526	E1	C709	*M5	C859	*P2	C1003	*A3	CL222	*J2	CL520	*F4	CL902	*B3	IC500	G2	IC980	L2	R221	*J1	R619	M1	R781	*H4	R905	*C2			RB608	M3	TP102	M5
C230	*F4	C527	*G3	C710	*N4	C860	*P2	C1004	*A5	CL223	*J2	CL521	*F4	CL903	*B3	IC501	E3	IC1000	*A4	R222	*J1	R620	N3	R782	*H4	R908	D5	RB100	*B4	RB609	M3	TP200	L2
C232	*J2	C528	*G3	C711	*N5	C861	*P5	C1005	*A4	CL224	*K2	CL522	*F3	CL904	*C3	IC502	E2	IC1001	A3	R223	*K2	R621	N3	R783	*H4	R909	D5	RB101	*B4	RB700	P5	TP201	L2
C233	*J1	C529	*G3	C712	M5	C862	*N4	C1006	*A4	CL225	*K2	CL523	*F3	CL905	*C2	IC503	G3	IC1002	*A5	R224	*K2	R622	M3	R784	*N3	R910	*C5	RB102	*B4	RB701	*M4	TP600	M1
C234	*J2	C530	*G3	C713	*M5	C863	*P5	C1007	*B4	CL226	*K2	CL524	*F3	CL906	*C3	IC504	E3	IC1003	*P5	R225	*K2	R623	M3	R785	*K5	R911	*D5	RB103	*B4	RB702	*M4	TP601	M1
C235	K1	C531	*G3	C714	M5	C864	*P4	C1008	*A4	CL227	*K2	CL525	*F3	CL907	*D2	IC505	*E3	IC1004	*C5	R226	*K2	R624	N3	R786	*C4	R912	C4	RB104	*C4	RB703	M5	TP700	M4
C300	*J4	C532	*G3	C715	B4	C865	*P4	C1009	*B5	CL228	*J2	CL526	*G3	CL908	*C3	IC600	M2	IC1100	M4	R227	*K2	R625	N3	R787	*D4	R913	C4	RB105	*C4	RB704	M5	TP701	M4
C301	*K4	C533	*G3	C716	A4	C866	*N4	C1010	*A4	CL229	*J2	CL527	*G3	CL909	*C3	IC601	*M3	IC1101	M4	R228	*K2	R626	N3	R788	*H4	R915	*B1	RB106	B3	RB705	M5	TP702	N1
C302	*K4	C534	*G3	C717	*D4	C867	*P4	C1011	*A3	CL230	*G4	CL528	*G4	CL910	*C3	IC602	N3	IC1102	*G5	R229	*K1	R627	*M2	R789	*H4	R916	*B1	RB107	B3	RB706	M5	TP703	D5
C303	*K4	C535	*G3	C718	*H4	C868	*P3	C1012	*A5	CL231	K2	CL529	*G3	CL911	*C3	IC603	M3	IC1103	*G5	R230	*K1	R628	*N2	R790	*K5	R917	*B1	RB108	B3	RB900	*A3	TP704	H4
C304	*K4	C536	*F3	C719	*N5	C869	*P3	C1013	*A3	CL232	*K1	CL530	*G3	CL912	*D3	IC604	M3	IC1104	*G5	R231	*K1	R629	*N2	R791	*N3	R918	*B1	RB109	B3	RB901	*A2	TP705	K5
C305	*K4	C537	*F3	C720	*C4	C870	*P3	C1014	*A3	CL233	*K2	CL531	*G3	CL913	*D2	IC605	*M2	IC1105	*B5	R232	*K1	R700	*P5	R792	*D4	R919	*G1	RB110	B3	RB902	*A2	TP800	P5
C306	*K4	C538	*G3	C721	*H4	C871	*P3	C1015	B5	CL234	*K2	CL532	*G3	CL914	*D2	IC606	*N2	IC1106	*B5	R233	*K1	R701	*P5	R793	*H4	R920	*G1	RB111	C3	RB903	*A2		
C307	*K4	C539	*G3	C722	*N5	C872	*P3	C1016	*A3	CL235	*K2	CL533	*G3	CL915	*D2	IC700	*P5			R234	*K1	R702	*P5	R795	*C4	R921	*G1	RB112	C3	RB904	*A3	X800	P3
C308	*K4	C540	*F3	C723	D4	C873	P3	C1017	B5	CL236	*J1	CL534	*G3	CL939	*C4	IC701	*P5	L800	*N5	R235	K1	R703	*P5	R796	*H4	R922	*G1	RB113	*J5	RB905	*A2	X801	P3
C309	*K4	C541	*G3	C724	*H4	C874	P3	C1018	*A5	CL237	*K1	CL600	N1	CL943	G4	IC702	P4	L1000	A5	R236	K1	R704	P5	R798	*C4	R923	*F1	RB114	*J5	RB906	*A2	X802	N3
C310	*K4	C542	*G3	C725	*H2	C875	P3	C1019	B5	CL238	*K1	CL601	M1	CL1000	*C5	IC703	*P4	L1001	A3	R237	K1	R705	P5	R799	*D4	R924	*F1	RB115	*H5	RB907	*D2	X803	P3
C311	*K4	C543	*G3	C726	D4	C876	*P3	C1020	*A5	CL239	*K1	CL602	M1	CL1002	D4	IC704	*M5	L1002	A5	R238	K1	R706	N5	R800	P5	R925	*F1	RB116	*H5	RB908	*B3	X804	P3
C312	*K4	C544	*F3	C727	*H4	C877	*P3	C1021	*C4	CL240	J1	CL603	N1	CL1003	D4	IC705	*M4	L1003	A4	R239	K1	R707	N5	R801	P5	R926	*F1	RB117	*J5	RB909	*B3	X805	P3
C313	*K4	C545	*F3	C728	*H4	C878	*P3	C1022	*C4	CL241	K1	CL604	N1			IC706	*H4	L1004	B5	R240	K1	R708	*P4	R802	P5	R927	*A2	RB118	*J5	RB910	*B2		
C314	*J4	C546	E3	C729	D4	C879	*N3	C1023	*A5	CL242	*K1	CL605	M1	CN2	B4	IC707	M5	L1005	C5	R241	*L2	R709	*P4	R803	P4	R928	*D3	RB119	*L5	RB911	*B2	*:B SIDE	
C315	*J4	C547	*E3	C730	*H4	C880	*P3	C1024	*A4	CL243	*K1	CL606	M1	CN3	E4	IC708	M5	L1006	C5	R242	*K2	R710	*P4	R804	P4	R929	*D3	RB120	*L5	RB912	*B2		
C316	*J4	C548	E3	C732	D4	C881	*P3	C1025	*C4	CL244	*K2	CL607	N3	CN4	G4	IC709	*M4	L1007	D5	R243	*K2	R711	*P5	R805	P4	R936	C4	RB121	*L5	RB913	*B2		
C317	*J4	C549	*F3	C733	*H4	C882	*P3	C1026	*C5	CL245	K1	CL608	N3	CN22	M6	IC710	B4	L1008	A5	R244	J1	R712	*P5	R806	P4	R940	*B3	RB122	*L5	RB914	*B2		
C318	*J4	C550	E3	C734	*K5	C883	*N3	C1027	*A4	CL246	K1	CL609	N3	CN23	G6	IC711	B4			R245	*J1	R713	*P5	R807	P4	R941	*C2	RB123	*L5	RB915	D2		
C319	*J4	C551	*F3	C735	*C4	C884	*P3	C1028	*A4	CL247	J1	CL610	N3	CN24	C6	IC712	*C4	Q200	*L2	R246	*K1	R714	*P5	R808	P4	R942	*B2	RB124	*L5	RB916	D2		
C320	*J4	C552	E3	C736	*H2	C885	P1	C1029	*C4	CL248	J1	CL611	N3	CN200	L1	IC713	*H4	Q201	*L2	R247	J1	R715	P4	R809	P4	R943	*B2	RB125	*L5	RB917	*C2		
C321	*K4	C553	*E3	C738	*H2	C886	*P3	C1030	*A5	CL249	*J1	CL612	N3			IC715	*C4	Q202	*D1	R248	*K1	R716	P5	R810	P4	R944	*D5	RB126	*L5	RB918	*F1		
C322	*K4	C554	*G2	C740	G2	C887	*N3	C1031	*C5	CL250	*J1	CL613	N3	D700	*N5	IC718	*G2	Q203	D1	R249	*L1	R717	P5	R811	*P4	R945	*C5	RB127	*L5	RB919	*E1		
C323	*K4	C555	*G3	C741	G2	C888	*P3	C1032	*C5	CL300	*J4	CL614	N3	D1000	C5	IC719	*G2	Q700	*D5	R250	*L2	R718	N4	R812	N5	R946	C4	RB128	*L5	RB920	*F1		
C324	*K4	C556	*G3	C743	G2	C889	*P3	C1033	*C4	CL301	K5	CL615	N3	D1001	*C5	IC720	*G2	Q701	*H4	R251	*L1	R719	*N4	R813	*N5	R947	C4	RB129	*K5	RB921	*F1		
C325	*K4	C557	*G3	C746	*K5	C890	*P2	C1034	*C4	CL302	*J5	CL616	N3	D1002	*C5	IC724	*N5	Q703	*C4	R252	*L2	R720	N4	R814	*N5	R948	C4	RB130	*K5	RB922	*C1		
C326	*K4	C558	*G3	C747	*K5	C891	P2	C1035	*C5	CL303	J5	CL700	P5	D1003	D5	IC725	*N5	Q704	*H4	R253	F4	R721	N4	R815	*N5	R949	E5	RB200	J2	RB923	G1		
C327	*J4	C559	E3	C800	N4	C892	P2	C1036	*A5	CL304	K5	CL701	P5	D1004	A4	IC726	*N5	Q800	*N5	R254	*L2	R722	M4	R816	N5	R950	E5	RB201	J2	RB924	F1		
C328	*J4	C560	F3	C801	N3	C893	N2	C1037	*C4	CL305	K5	CL702	P5	D1005	A5	IC727	*H2	Q801	*N5	R255	*K2	R723	M4	R817	*N5	R951	D5	RB202	J2	RB925	*G1		
C329	*K4	C561	*E3	C802	*N5	C894	*P3	C1038	*C4	CL306	K5	CL703	P5			IC728	*H2	Q802	*N5	R256	*K2	R724	M4	R818	*P5	R952	C4	RB203	J2	RB926	*G1		
C330	K3	C562	*E2	C803	*P5	C895	*P2	C1039	*C4	CL307	K5	CL704	P4	E100	*A1	IC729	*H2	Q1000	*B5	R257	J5	R725	M4	R819	*N5	R953	*C1	RB204	K1	RB927	B2		
C331	*L4	C563	*G2	C804	*P5	C896	*P3	C1040	*A5	CL308	K5	CL705	N5	E200	*G1	IC730	K5	Q1001	*B4	R258	*F4	R726	P6	R820	*P2	R954	*C1	RB205	K1	RB928	B2		
C332	*L3	C564	*G2	C805	*P4	C897	*P3	C1041	*A5	CL309	*J4	CL706	P4	E300	K3	IC733	*K5	Q1002	*D4	R259	*F4	R727	P6	R821	*P2	R955	C3	RB206	K2	RB929	D2		
C333	*L4	C565	*G2	C806	*P4	C898	N3	C1042	*A5	CL310	K5	CL707	N4	E500	*J4	IC800	*N5	Q1003	*D5	R260	*F4	R728	P6	R822	*P2	R956	C3	RB207	K2	RB930	C1		
C334	*M3	C600	M1	C807	*N4	C899	*P2	C1043	A5	CL311	K5	CL708	N4	E600	*M4	IC801	*N5			R261	*F4	R729	N5	R823	*P2	R957	*B3	RB208	*J1	RB931	D5		
C335	*M4	C601	*M1	C808	*N4	C900	*B2	C1044	*F5	CL312	K5	CL709	N5	E700	L1	IC802	*N5	R100	C3	R262	*F4	R730	P4	R824	*P2	R962	*B1	RB209	*J1	RB932	D5		
C336	*M3	C602	M1	C809	*N5	C901	*F5	C1064	D5	CL313	K5	CL710	N5	E900	*D3	IC803	*P5	R101	C3	R263	*D1	R731	P4	R825	*N5	R963	*C2	RB210	*J2	RB933	C1		
C337	*M3	C603	*M1	C810	*N5	C902	*B3	C1065	D5	CL314	K5	CL711	N5			IC804	*P5	R102	*K5	R264	*D1	R732	*P4	R826	*N4	R964	C4	RB211	*J2	RB934	*D2		
C338	*L3	C604	*N1	C811	*P5	C903	*B2	C1066	D5	CL315	K5	CL712	P5	F1000	B5	IC805	*N4	R103	*K5	R265	*D1	R733	*P4	R827	*N5	R965	C3	RB212	*K1	RB935	B2		
C339	*L3	C605	*N1	C812	*P5	C904	*B2	C1067	*A4	CL316	K5	CL713	N4	F1001	B5	IC806	*N4	R104	J5	R266	*D1	R734	*N5	R828	*N5	R980	*L2	RB213	*K1	RB936	*D2		
C340	*L4	C606	*M1	C813	*P5	C905	*B2	C1068	*A4	CL317	K5	CL714	P5			IC807	*N4	R105	J5	R267	*L1	R735	*N4	R829	*P2	R981	*L2	RB214	*K2	RB937	*C2		
C341	*L5	C607	*M1	C814	*P5	C906	*D2	C1069	*A3	CL318	K5	CL715	N4	FB700	*P4	IC808	*P3	R106	*K5	R268	*L2	R736	N4	R830	*P2	R982	*L2	RB215	*K2	RB938	*C2		
C342	*M4	C608	*M2	C815	*P4	C907	*F1	C1070	*A3	CL319	K5	CL716	N4	FB701	*C4	IC809	*P3	R107	*K5	R269	J1	R737	N4	R831	*P2	R990	B3	RB216	*J1	RB939	*D3		
C343	*M5	C609	*M2	C816	*P4	C908	*G1	C1071	*A5	CL320	K5	CL717	N4	FB702	*H4	IC810	P3	R108	K5	R271	*E4	R738	N4	R832	*N2	R1000	B4	RB217	*J1	RB940	*D2		

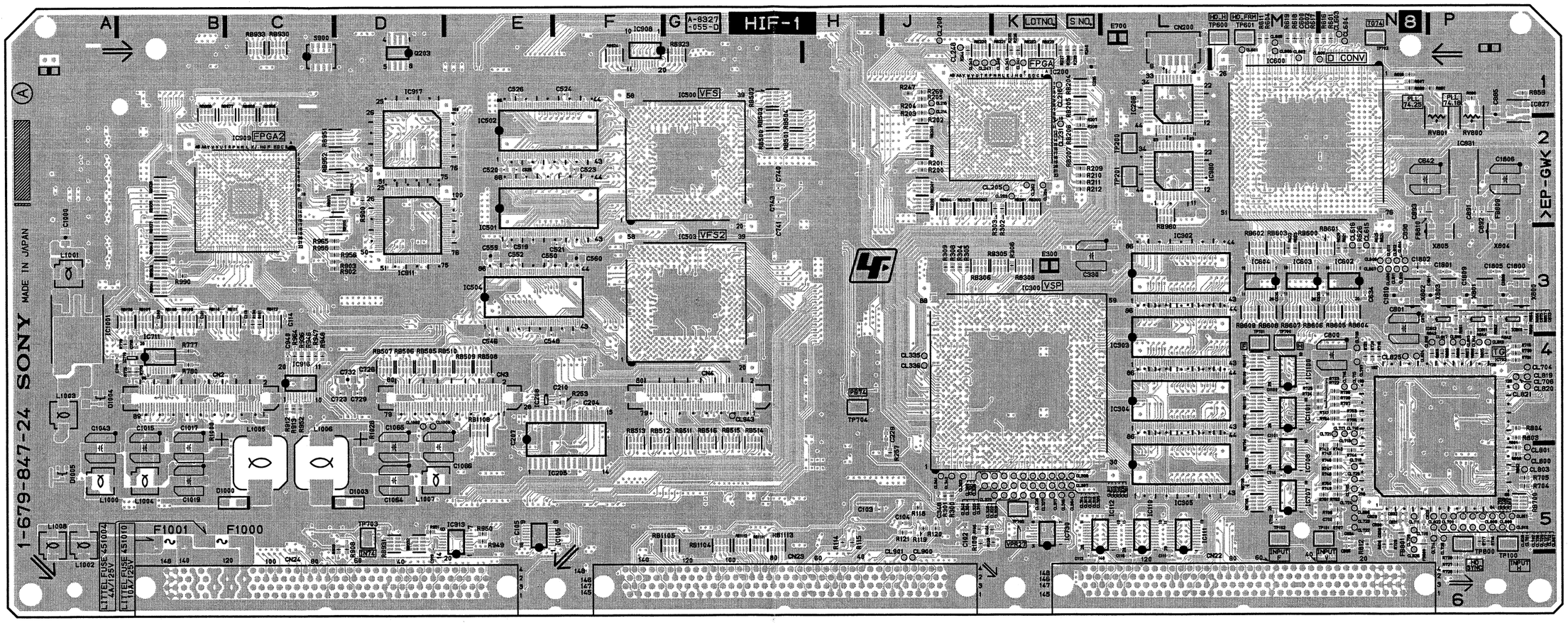

Components locations list; previous page

HIF-1 -A SIDE-
SUFFIX: -24

HIF-1
SUFFIX: -24

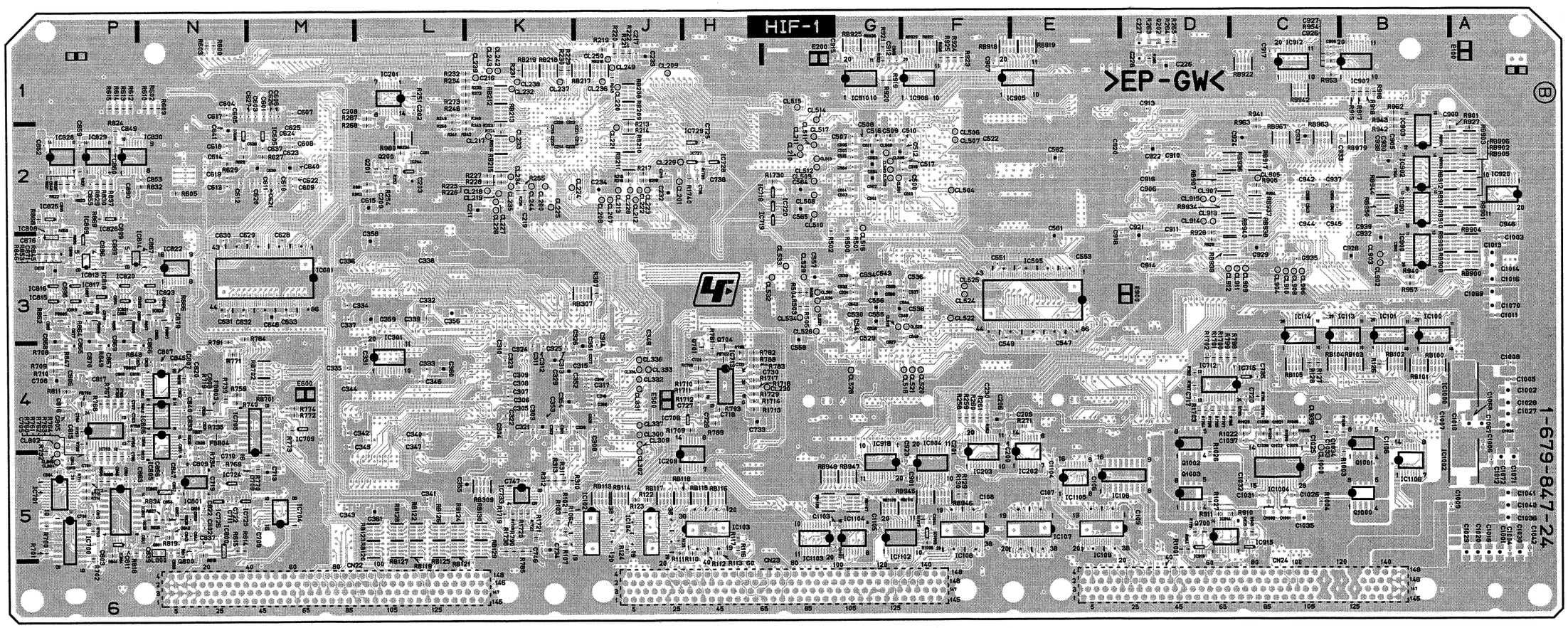

HIF-1 -B SIDE-
SUFFIX: -24

4-49 (d)

HIF-1 (1-679-847-23)

C54	*G4	C335	*M4	C519	C3	C716	D4	C861	*P5	C1038	B3	CL241	*G2	CL603	N1	CN23	H6	IC413	*J1	IC914	*D5	R125	*J5	R400	K1	R743	N5	R839	*N4	R1004	*A2	RB214	*H2	RB920	*D1
C55	F4	C336	*M3	C520	C2	C717	*D5	C862	*N4	C1039	B3	CL242	*G2	CL604	N1	CN24	C6	IC414	*J2	IC915	*C5	R126	*C4	R401	K1	R744	N5	R840	*P4	R1005	*B2	RB215	*H3	RB921	*D1
C57	F4	C337	*M3	C521	C3	C718	*H4	C863	*P5	C1064	A3	CL243	*H2	CL605	M1	CN200	G1	IC415	*K1	IC916	*B1	R127	*C4	R402	J1	R745	N5	R841	*P5	R1006	*B2	RB216	*G2	RB922	*C1
C59	F4	C338	*L3	C522	*C2	C719	*N5	C864	*P4	C1065	A3	CL244	*G3	CL606	M1	CN900	E1	IC416	*K2	IC919	*D5	R128	*C4	R403	J1	R746	N5	R842	P3	R1009	B3	RB217	*G2	RB923	D1
C60	F5	C339	*L3	C523	C2	C720	*D5	C865	*P4	C1066	A4	CL300	*J4	CL607	N3			IC500	D2	IC1000	B5	R129	F5	R404	J2	R747	N5	R843	P3	R1016	B2	RB218	*G2	RB924	D1
C61	F4	C340	*L4	C524	C1	C721	*H4	C866	*N4	C1067	*B5	CL301	K5	CL608	N3	D700	*N5	IC501	C3	IC1001	A5	R130	F5	R405	J2	R748	N5	R844	P3	R1021	B3	RB219	*G2	RB925	*E1
C62	*G5	C341	*L5	C525	C2	C722	*N5	C867	*P4	C1068	*B5	CL302	*J5	CL609	N3	D1000	A2	IC502	C2	IC1002	C5	R200	F3	R406	J2	R749	N5	R845	*P3	R1022	*B3	RB220	G2	RB926	*E1
C63	F5	C342	*M4	C526	C1	C723	D5	C868	*P3	C1069	*A4	CL303	J5	CL610	N3	D1001	*A3	IC503	D3	IC1004	*A2	R201	F3	R407	J2	R750	N5	R846	*P3	R1023	*B3	RB221	G2	RB927	*C1
C64	F4	C343	*M5	C527	*D3	C724	*H4	C869	*P3	C1070	*A4	CL304	K5	CL611	N3	D1002	*A3	IC504	C3	IC1005	B4	R202	F2	R408	J2	R751	N5	R847	*P4	R1026	*A3	RB222	G2	RB928	*C1
C65	*E4	C344	*M4	C528	*D3	C725	F3	C870	*P3	C1071	*C5	CL305	K5	CL612	N3	D1003	A3	IC505	*C3	IC1006	B3	R203	F2	R409	J2	R752	N5	R848	*P4	R1027	*A3	RB223	G2	RB929	*C1
C66	D5	C345	*M4	C529	*E3	C726	D5	C871	*P3	C1072	*C5	CL306	K5	CL613	N3			IC600	M2	IC1007	*B3	R204	F2	R418	*K2	R753	N4	R849	*P4	R1028	B3	RB224	*G1	RB930	*B1
C67	E5	C346	*L4	C530	*E3	C727	*H4	C872	*P3	C1073	B4	CL307	K5	CL614	N3	E100	*B4	IC601	*M3	IC1008	*C3	R205	F2	R419	*K2	R754	N4	R850	P3	R1029	*C3	RB300	G3	RB931	D5
C68	*P1	C347	*L4	C531	*E3	C728	K5	C873	P3	C1074	*B3	CL308	K5	CL615	N3	E200	*H2	IC602	N3	IC1100	M4	R207	H2	R500	*E3	R755	N4	R851	P3	R1700	*D5	RB301	G3	RB932	D5
C100	*D4	C348	J5	C532	*E3	C729	D5	C874	P3	C1075	B3	CL309	*J4	CL616	N3	E300	L3	IC603	M3	IC1101	M4	R208	H2	R501	*E3	R756	*N4	R852	P3	R1701	*D5	RB302	G3	RB933	*B1
C101	*C4	C349	*J4	C533	*E3	C730	*H4	C875	P3	C1076	*B3	CL310	K5	CL700	P5	E400	N3	IC604	M3	IC1102	*G5	R209	H3	R502	*E3	R757	*P4	R853	*P3	R1702	*D5	RB303	G3	RB934	*C1
C102	J5	C400	*K1	C534	*E3	C731	K5	C876	*P3	C1100	M4	CL311	K5	CL701	P5	E500	*J4	IC605	*M2	IC1103	*G5	R210	H3	R503	*E3	R758	*P4	R854	P3	R1703	*D5	RB304	G3	RB935	B3
C103	H5	C401	*K1	C535	*D3	C732	D5	C877	*P3	C1101	M4	CL312	K5	CL702	P5	E600	*M4	IC606	*N2	IC1104	*G5	R211	H3	R504	*E3	R759	*P4	R855	P3	R1704	*D5	RB305	K3	RB1100	M4
C104	J5	C402	*K1	C536	*D3	C733	*H4	C878	*P3	C1102	*G5	CL313	K5	CL703	P5	E700	L1	IC700	*P5	IC1105	*E5	R212	H3	R505	*E3	R760	*P5	R856	*P3	R1705	*D5	RB306	J3	RB1101	M4
C105	E5	C403	*J1	C537	*D3	C734	*K5	C879	*N3	C1103	*G5	CL314	K5	CL704	P4	E900	*C1	IC701	*P5	IC1106	*C5	R213	*F2	R506	*E3	R761	*P5	R857	P3	R1706	*D5	RB307	*J3	RB1102	M4
C106	*E5	C404	*J1	C538	*D3	C735	D5	C880	*P3	C1104	E4	CL315	K5	CL705	N5			IC702	P4			R214	*F2	R600	N1	R762	*P5	R858	*P3	R1707	*D5	RB308	K3	RB1103	M4
C107	E5	C405	*J1	C539	*D3	C736	F3	C881	*P3	C1105	*G5	CL316	K5	CL706	P4	F1000	B5	IC703	*P4	L50	D5	R215	*F3	R601	N1	R763	*P5	R859	P2	R1708	*H4	RB309	*K5	RB1104	G5
C108	F5	C406	*J1	C540	*D3	C737	H4	C882	*P3	C1106	*D5	CL317	K5	CL707	N4	F1001	B5	IC704	*M5	L51	E5	R216	*F3	R602	*N1	R764	*P5	R860	P2	R1709	*H4	RB400	K1	RB1105	G5
C109	E5	C407	*K1	C541	*E3	C738	F3	C883	*N3	C1800	P3	CL318	K5	CL708	N4			IC705	*M4	L800	*N5	R217	*F3	R603	N1	R765	*P4	R861	N2	R1710	*H4	RB401	K1	RB1106	*G5
C110	L6	C408	*K1	C542	*E3	C740	E2	C884	*P3	C1801	P3	CL319	K5	CL709	N5	FB700	*P4	IC707	M5	L1000	B4	R218	*F3	R604	M1	R766	*P4	R862	*P3	R1711	*H4	RB402	K1	RB1107	*G5
C111	L6	C409	*K2	C543	*E3	C741	E2	C885	P2	C1802	N3	CL320	K5	CL710	N5	FB701	*D5	IC708	M5	L1001	A4	R219	G2	R605	*N2	R767	*P4	R863	*P3	R1712	*H4	RB403	L1	RB1108	E4
C112	K6	C410	*K2	C544	*D3	C742	E2	C886	*P3	C1803	*P3	CL321	K5	CL711	N5	FB702	*H4	IC709	*M4	L1002	A5	R220	G2	R606	N1	R768	*P4	R864	*P3	R1713	*H4	RB404	K1	RB1109	*G5
C113	*B4	C411	*K2	C545	*D3	C743	F2	C887	*N3	C1804	*N3	CL322	K5	CL712	P5	FB800	N5	IC710	D4	L1003	A5	R221	*F2	R607	N1	R769	*N5	R865	*P3	R1714	*H4	RB405	*K3	RB1110	*G5
C114	*C4	C412	K3	C546	C3	C744	F2	C888	*P3	C1805	P3	CL323	K5	CL713	N4	FB801	N5	IC711	*D4	L1004	A2	R222	*F2	R608	N1	R770	*M5	R866	*N3	R1715	*H4	RB406	*K3	RB1111	G5
C200	*G5	C413	*J3	C547	*C3	C745	F2	C889	*P3			CL324	K5	CL714	P5	FB802	*P4	IC712	*D5	L1005	A2	R223	*H2	R609	*N1	R771	*N4	R867	*N3	R1716	*H4	RB407	*J3	RB1112	G5
C201	*H5	C414	*J2	C548	C3	C746	*K5	C890	*P2	CL51	*F4	CL325	K5	CL715	N4	FB803	*N4	IC713	*H4	L1006	A3	R224	*H2	R610	*N1	R772	*M4	R868	*P2	R1717	*H4	RB408	*J3	RB1113	H5
C202	*G1	C415	*J2	C549	*C3	C747	*K5	C891	*P2	CL52	*F4	CL326	K5	CL716	N4	FB804	*N4	IC715	D5	L1007	B4	R225	*H3	R611	M1	R773	*M4	R869	*P2	R1718	*K5	RB409	*K3		
C203	G1	C416	*J2	C550	C3	C800	N4	C892	*P2	CL56	J6	CL327	K5	CL717	N4	FB805	*P3	IC716	H4			R226	*H3	R612	*P1	R774	*M4	R900	B1	R1719	*K5	RB410	J1	RV800	P2
C204	H4	C417	*J2	C551	*C3	C801	N4	C893	*N2	CL57	J6	CL328	K5	CL718	N4	FB806	*P3	IC718	*E2	Q200	H1	R227	*H3	R613	*P1	R775	*D5	R901	B1	R1720	*K5	RB411	K1	RV801	N2
C205	*G4	C418	*K3	C552	C3	C802	*N5	C894	*P3	CL58	*F4	CL329	K5	CL719	N5	FB807	*N3	IC719	*E2	Q201	H1	R228	*H3	R614	*P1	R776	*D4	R902	*E1	R1721	*K5	RB412	J1		
C206	*H4	C419	*K3	C553	*C3	C803	*P5	C895	*P2	CL59	*F4	CL330	K5	CL720	N5	FB808	*P3	IC720	*E2	Q202	*F1	R229	*G2	R615	*P1	R777	*D4	R904	*B1	R1722	*K5	RB413	J1	S50	F1
C207	G5	C420	*J2	C554	*E2	C804	*P5	C896	*P3	CL60	*F4	CL331	*J4	CL721	N4	FB809	*P2	IC721	*F2	Q203	G1	R230	*G2	R616	N1	R778	D4	R905	*B2	R1723	*K5	RB414	J1	S900	C1
C208	*H2	C421	*J2	C555	*E3	C805	*P4	C897	*P3	CL61	*F4	CL332	*J4	CL722	N5	FB810	*P2	IC722	*F2	Q700	*D5	R231	*G2	R617	M1	R779	*D5	R906	*B2	R1729	*F2	RB415	*K2		
C209	H1	C422	*J2	C600	M1	C806	*P4	C898	N3	CL62	*F4	CL333	*J4	CL723	N5			IC723	*F2	Q701	*H4	R232	*H2	R618	M1	R780	*D4	R907	*B2	R1730	*E2	RB416	*K2	TP100	P5
C210	H4	C423	*J3	C601	*M1	C807	*N4	C899	*P2	CL63	*F4	CL334	*J4	CL724	N5	IC50	*G5	IC724	*N5	Q703	*D5	R233	*H2	R619	M1	R781	*H4	R908	D5	R1731	*F2	RB417	*J2	TP101	N5
C211	*G1	C424	*K3	C602	M1	C808	*N4	C900	B1	CL64	*F4	CL335	J4	CL725	P5	IC52	E4	IC725	*N5	Q704	*H4	R234	*H2	R620	N3	R782	*H4	R909	D5	R1738	*K5	RB418	*J2	TP102	M5
C212	*G2	C425	K3	C603	*M1	C809	*N5	C902	C2	CL65	*F4	CL336	J4	CL726	P5	IC53	F5	IC726	*N5	Q800	*N5	R235	G2	R621	N3	R783	*H4	R910	D5	R1739	F3	RB419	*K2	TP200	*H3
C213	*G2	C426	*K2	C604	*N1	C810	*N5	C903	C2	CL66	*F4	CL337	*J4	CL727	P5	IC54	E5	IC727	F3	Q801	*N5	R236	G2	R622	M3	R785	*K5	R911	D5	R1740	F3	RB420	*K3	TP201	*F3
C214	*G3	C427	*K2	C605	*N1	C811	*P5	C904	C2	CL67	*F4	CL338	*J4	CL728	P5	IC55	F5	IC728	F3	Q802	*N5	R237	G2	R623	M3	R786	D5	R912	*C3			RB500	E2	TP400	F1
C215	*G2	C428	*K2	C606	*M1	C812	*P5	C905	C1	CL68	*F4	CL339	J5	CL729	P5	IC56	*G4	IC729	F3	Q1000	*A2	R238	H2	R624	N3	R787	*D5	R913	*C3	RB50	*G5	RB501	P2	TP401	F1
C216	*H2	C429	*K1	C607	*M1	C813	*P5	C907	*D1	CL69	*F4	CL340	J5	CL730	P5	IC57	*F4	IC730	K5	Q1001	*B2	R239	H2	R625	N3	R788	*H4	R915	*B3	RB51	*F5	RB502	F1	TP600	M1
C217	*F2	C430	*K1	C608	*M2	C814	*P5	C908	*D1	CL70	*E4	CL341	J5	CL800	P5	IC58	P1	IC731	K5	Q1002	*B3	R240	H2	R626	N3	R789	*H4	R916	*B3	RB52	*G5	RB503	E2	TP601	M1
C218	*F3	C431	*J1	C609	*M2	C815	*P4	C909	*C1	CL71	*E4	CL342	J5	CL801	P5	IC59	D4	IC732	K5	Q1003	*A3	R241	*H2	R627	*M2	R790	*K5	R917	*B2	RB53	*G5	RB504	F2	TP700	M4
C219	*G3	C432	*L2	C610	*M2	C816	*P4	C910	*B1	CL72	*E4	CL400	J2	CL802	*P4	IC60	E5	IC733	*K5			R242	*H2	R628	*N2	R792	*D5	R918	*B2	RB100	*C4	RB505	E3	TP701	M4
C220	*G2	C433	L2	C611	*M2	C817	*P4	C911	*C3	CL73	*E4	CL401	*K1	CL803	P5	IC100	*C4	IC800	*N5	R50	F4	R243	*H2	R629	*N2	R793	*H4	R919	D1	RB101	*C4	RB506	E3	TP702	P1
C221	*G2	C434	*L1	C612	*N2	C818	*P4	C912	*D1	CL74	*E4	CL402	*K1	CL804	*P5	IC101	*D4	IC801	*N5	R51	E4	R244	G2	R700	*P5	R795	*D5	R920	*D1	RB102	*C4	RB507	E3	TP703	D5
C222	*G3	C435	L1	C613	*N2	C819	*P4	C913	*B2	CL75	*E4	CL403	*K1	CL805	*P5	IC102	*J5	IC802	*N5	R52	*F1	R245	*G2	R701	*P5	R796	*H4	R921	*D1	RB103	*B4	RB508	E3	TP704	H4
C223	*G2	C436	*L1	C614	*N2	C820	*N4	C914	*C2	CL200	*G3	CL404	*K1	CL806	N5	IC103	*H5	IC803	*P5	R53	*P1	R246	*H2	R702	*P5	R798	*D5	R922	*D1	RB104	*B4	RB509	E4	TP705	K5
C226	*F1	C437	L1	C615	N1	C821	*N4	C915	*E1	CL201	*F3	CL405	J1	CL807	P5	IC104	*J5	IC804	*P5	R54	*P1	R247	F2	R703	*P5	R799	*D5	R923	D1	RB105	*C4	RB510	E3	TP800	P5
C227	*F1	C438	*L1	C616	N2	C822	*N5	C916	*C2	CL202	*G3	CL406	J1	CL808	P5	IC105	E5	IC805	*N4	R55	*P1	R248	*H2	R704	P5	R800	P5	R924	C1	RB106	*C4	RB511	*G4		
C228	*F1	C439	L1	C617	*N1	C823	N5	C917	*E1	CL203	*G3	CL500	*D2	CL809	P5	IC106	*E5	IC806	*N4	R56	*P1	R249	*H2	R705	P5	R801	P5	R925	D1	RB107	*C4	RB512	*G4	X800	P3
C229	J4	C440	*L1	C618	*N2	C824	*N4	C918	E1	CL204	*G3	CL501	*D2	CL810	P5	IC107	*E5	IC807	*N4	R57	*P1	R250	*H2	R706	N5	R802	P5	R926	D1	RB108	*C4	RB513	*G4	X801	P3
C230	*H4	C441	L1	C619	*N2	C825	*N4	C919	D5	CL205	*G3	CL502	*D2	CL811	P5	IC108	*F5	IC808	*P3	R58	*P1	R251	*G1	R707	N5	R803	P4	R927	B1	RB109	*C4	RB514	*G4	X802	N3
C300	*J4	C442	*L3	C620	*M2	C826	*N4	C920	*C3	CL206	*G3	CL503	*D2	CL812	P5	IC109	*E5	IC809	*P3	R59	*P1	R252	H1	R708	*P4	R804	P4	R928	B1	RB110	*B4	RB515	*F4	X803	P3
C301	*K4	C443	L3	C621	*M2	C827	*N4	C921	*B2	CL207	*G3	CL504	*D2	CL813	P4	IC110	L5	IC810	P3	R60	*P1	R253	H4	R709	*P4	R805	P4	R930	*E1	RB111	*B4	RB516	*F4	X804	P3
C302	*K4	C444	*L2	C622	*M2	C828	*N4	C922	*C2	CL208	*F2	CL505	*D2	CL814	P4	IC111	L5	IC811	P3	R61	*P1	R254	H1	R710	*P4	R806	P4	R931	*E1	RB112	*C4	RB600	M3	X805	P3
C303	*K4	C445	L2	C623	*M2	C829	N5	C923	*B2	CL209	*F2	CL506	*D2	CL815	P4	IC112	L5	IC812	P3	R62	D5	R255	*G3	R711	*P5	R807	P4	R932	*E1	RB113	*J5	RB601	N3		
C304	*K4	C446	*L2	C624	*M2	C830	N5	C924	*B1	CL210	*E2	CL507	*D2	CL816	P4	IC113	*B4	IC813	*P3	R63	E5	R256	*G3	R712	*P5	R808	P4	R933	*E1	RB114	*J5	RB602	M3	*:B SIDE	
C305	*K4	C447	L2	C625	*M1	C831	N5	C925	*D5	CL211	*E2	CL508	*E2	CL817	P4	IC114	*C4	IC814	*P3	R64	D5	R257	J5	R713	*P5	R809	P4	R934	*E3	RB115	*H5	RB603	M3		
C306	*K4	C448	*L2	C626	*M1	C832	N5	C926	*C1	CL212	*G3	CL509	*E2	CL818	P4	IC200	G2	IC815	*P3	R65	E5	R258	*H4	R714	*P5	R810	P4	R936	*C2	RB116	*H5	RB604	N3		
C307	*K4	C449	L2	C627	*M1	C833	*N4	C927	*C1	CL213	*F3	CL510	*E2	CL819	P4	IC201	*G1	IC816	*P3	R66	F4	R259	*H4	R715	P4	R811	*P4	R940	*C2	RB117	*J5	RB605	N3		
C308	*K4	C450	*L2	C628	*M3	C834	N5	C1000	A4	CL214	*F2	CL511	*E2	CL820	P4	IC202	*G5	IC817	*P3	R67	E4	R260	*H4	R716	P5	R812	N5	R942	B1	RB118	*J5	RB606	M3		
C309	*K4	C451	L2	C629	*N3	C835	N5	C1001	*A5	CL215	*F2	CL512	*E2	CL821	P4	IC203	*H5	IC818	*P3	R68	F4	R261	*H4	R717	P5	R813	*N5	R943	B1	RB119	*L5	RB607	M3		
C310	*K4	C452	*K2	C630	*N3	C836	N5	C1002	A4	CL216	*H2	CL513	*E2	CL822	P5	IC204	H1	IC819	*P3	R100	*C4	R262	*H4	R718	N4	R814	*N5	R944	*D5	RB120	*L5	RB608	M3		
C311	*K4	C453	*K2	C631	*N3	C837	*N5	C1003	*A4	CL217	*H2	CL514	*E1	CL823	P5	IC205	G5	IC820	*P3	R101	*C4	R263	*F1	R719	*N4	R815	*N5	R945	*C5	RB121	*L5	RB609	M3		
C312	*K4	C454	*J2	C632	*N3	C838	*N5	C1004	*A5	CL218	*H3	CL515	*E1	CL824	N4	IC206	H2	IC821	*P3	R102	*K5	R264	*G1	R720	N4	R816	N5	R946	C1	RB122	*L5	RB700	P5		
C313	*K4	C455	*J2	C633	*M3	C839	*N5	C1005	*A4	CL219	*H3	CL516	*E2	CL825	N4	IC207	H1	IC822	*N3	R103	*K5	R265	*G1	R721	N4	R817	*N5	R947	C1	RB123	*L5	RB701	*M4		
C314	*J4	C456	*K2	C634	N3	C840	*N4	C1006	*B3	CL220	*F2	CL517	*E2	CL826	N5	IC208	H4	IC823	*N3	R104	J5	R266	*F1	R722	M4	R818	*P5	R948	C2	RB124	*L5	RB702	*M4		
C315	*J4	C457	*K2	C635	N3	C841	*N5	C1007	*B5	CL221	*F2	CL518	*D4	CL919	*B2	IC209	*J5	IC824	*N3	R105	J5	R267	*H1	R723	M4	R819	*N5	R949	E5	RB125	*L5	RB703	M5		
C316	*J4	C500	*D2	C636	M3	C842	*N5	C1008	*B5	CL222	*F3	CL519	*D3	CL922	*B3	IC300	K4	IC825	*P2	R106	*K5	R268	*J1	R724	M4	R820	*P2	R950	E5	RB126	*L5	RB704	M5		
C317	*J4	C501	*D2	C637	*M2	C843	*N5	C1009	*C5	CL223	*F3	CL520	*D4	CL923	*B3	IC301	*L4	IC826	*P2	R107	*K5	R269	F3	R725	M4	R821	*P2	R951	D5	RB127	*L5	RB705	M5		
C318	*J4	C502	*D2	C638	*N2	C844	*N5	C1010	*B5	CL224	*G3	CL521	*D4	CL924	*B3	IC302	L3	IC827	P2	R108	K5	R271	*G4	R726	P6	R822	*P2	R952	*C2	RB128	*L5	RB706	M5		
C319	*J4	C503	*E2	C700	*P5	C845	*N4	C1011	*A4	CL225	*G3	CL522	*D3	CL925	*B3	IC303	L4	IC828	*P2	R109	J5	R272	*H2	R727	P6	R823	*P2	R953	*C1	RB129	*K5	RB900	B2		
C320	*J4	C504	*E2	C701	*P5	C846	*P5	C1012	*C5	CL226	*H2	CL523	*D3	CL932	*C1	IC304	L4	IC829	*P2	R110	*H5	R273	*H2	R728	P6	R824	*P2	R954	*C1	RB130	*K5	RB901	B2		
C321	*K4	C505	*E2	C702	N5	C847	*N5	C1015	*A1	CL227	*H2	CL524	*D3	CL933	*B1	IC305	L5	IC830	*P2	R111	*J5	R300	J5	R729	N5	R825	*N5	R955	*C1	RB200	F3	RB902	B2		
C322	*K4	C506	*E2	C703	*P4	C848	*P2	C1017	A2	CL228	*F3	CL525	*D3	CL939	*C4	IC400	K2	IC900	B2	R112	*H5	R301	J5	R730	P4	R826	*N4	R956	*B3	RB201	F3	RB903	B1		
C323	*K4	C507	*E2	C704	*P4	C849	*P2	C1019	A2	CL229	*F3	CL526	*E3	CL942	*E1	IC401	K1	IC901	B2	R113	*H5	R302	G3	R731	P4	R827	*N5	R957	*C2	RB202	F3	RB904	B3		
C324	*K4	C508	*E2	C705	*P5	C850	*N5	C1021	B3	CL230	*H4	CL527	*E3	CL943	G4	IC402	K1	IC902	B2	R114	H5	R303	G3	R732	*P4	R828	*N5	R958	*C1	RB203	F2	RB905	B2		
C325	*K4	C509	*D2	C706	*P5	C851	*N5	C1022	B3	CL231	*H2	CL528	*E4	CL946	*C1	IC403	K1	IC903	B1	R115	H5	R304	J3	R733	*P4	R829	*P2	R959	*C1	RB204	H2	RB906	B2		
C326	*J4	C510	*D2	C707	*P4	C852	*P2	C1025	*B2	CL232	*G2	CL529	*E3	CL947	C1	IC404	J1	IC905	*D1	R116	*H5	R305	J3	R734	*N5	R830	*P2	R960	*B3	RB205	H2	RB908	B2		
C327	*J4	C511	*D2	C708	*P4	C853	*N2	C1026	*A2	CL233	*G2	CL530	*E3	CL1000	*B2	IC405	J1	IC906	*D1	R117	*H5	R306	K3	R735	*N4	R831	*P2	R961	*C1	RB206	H2	RB909	B3		
C328	*J4	C512	*D2	C709	*M5	C854	*N5	C1029	*B2	CL234	*G3	CL531	*E3	CL1002	D4	IC406	J1	IC907	*B1	R118	J5	R307	*J3	R736	N4	R832	*N2	R962	B1	RB207	H3	RB910	B2		
C329	*K4	C513	*D2	C710	*N4	C855	*P2	C1031	*A3	CL235	*G3	CL532	*E3	CL1003	D4	IC407	*L1	IC908	D1	R119	J5	R308	J3	R737	N4	R833	*P5	R963	*C1	RB208	*F2	RB911	B2		
C330	*J4	C514	*E2	C711	*N5	C856	*N5	C1032	*A3	CL236	*G2	CL533	*F3			IC408	L1	IC909	*C2	R120	J5	R309	J3	R738	N4	R834	*N5	R964	*C1	RB209	*F2	RB912	B2		
C331	*L4	C515	*E2	C712	M5	C857	*N5	C1033	B2	CL237	*G2	CL534	*E3	CN2	B4	IC409	*L2	IC910	*E1	R121	J5	R310	*K5	R739	*N4	R835	*P5	R965	*C2	RB210	*F2	RB913	B2		
C332	*L3	C516	*E2	C713	*M5	C858	*P4	C1034	B2	CL238	*G2	CL600	N1	CN3	E4	IC410	L2	IC911	E1	R122	*J5	R311	*K5	R740	*N4	R836	*P5	R1000	B2	RB211	*F3	RB914	B1		
C333	*L4	C517	*D2	C714	M5	C859	*P2	C1035	*A3	CL239	*H2	CL601	M1	CN4	G4	IC411	*K1	IC912	*E1	R123	*J5	R312	*K5	R741	N4	R837	*P2	R1001	*D5	RB212	*H2	RB918	*D1		
C334	*M3	C518	*D2	C715	*D4	C860	*P2	C1037	*B3	CL240	*G2	CL602	M1	CN22	M6	IC412	*K2	IC913	E5	R124	*J5	R313	*K5	R742	N5	R838	*N5	R1003	*A2	RB213	*H2	RB919	*C1		

HIF-1
SUFFIX: -23

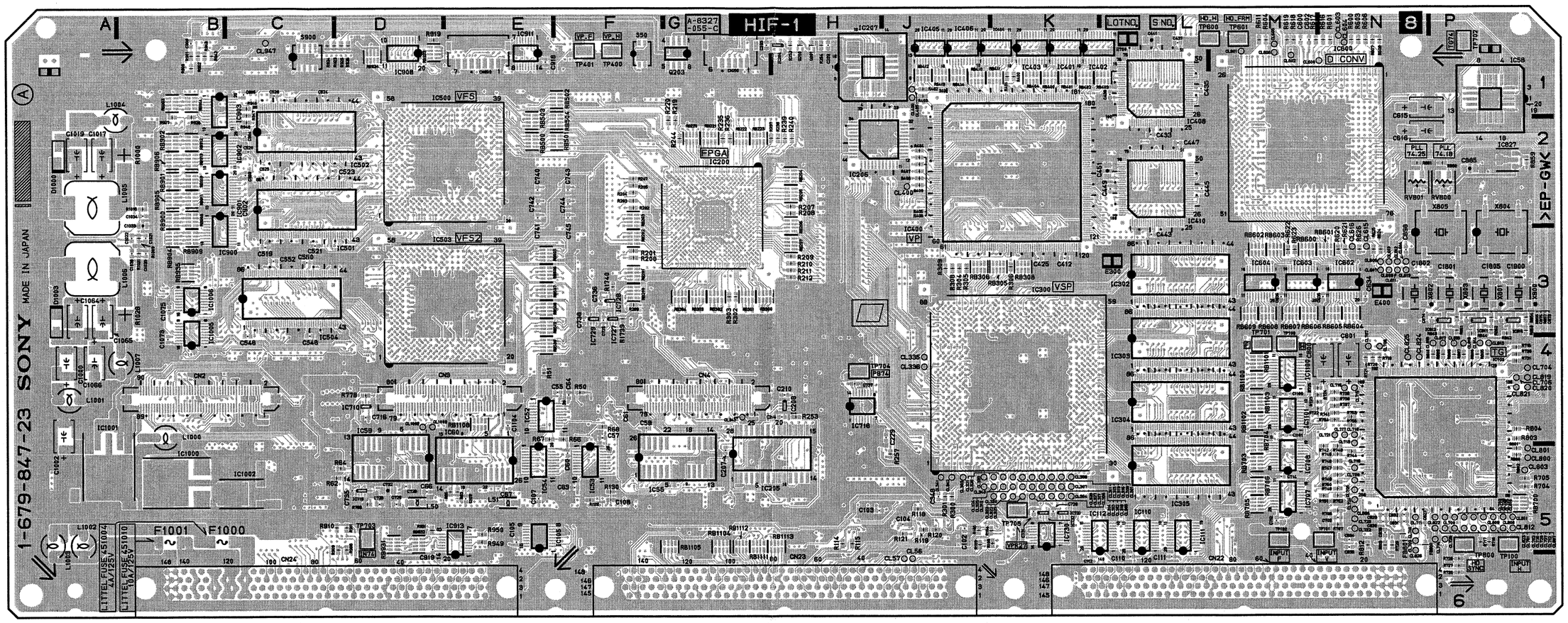
HIF-1
A-8327-055-C
SONY
MADE IN JAPAN
1-679-847-23
EP-GW
IC500 VFS
IC503 VFS2
EPGA
IC200
IC207
IC400 VP
IC300 VSP
IC600 D CONV
IC827
IC1001
IC1002
IC1900
IC716
IC305
IC304
IC303
IC302
IC206
IC208
IC205
IC913
IC915
IC1000
IC1003
IC1004
IC1005
IC1006
IC1007
IC1008
IC1009
IC1010
IC1011
IC1012
F1001
F1000
LITTEL FUSE 451004 4A/125V
LITTEL FUSE 451010 10A/125V
LOT NO.
S NO.
HD_H
HD_FRM
TP600
TP601
TP702
TP704
TP705
TP708
TP800
TP100
TP401
TP400
TP701
PS74
VP_F
VP_H
PLL 74.25
PLL 74.18
RVB01
RVB00
X605
X604
X603
X602
X601
E300
E400
Q203
D1000
D1003
D1004
D1005
D1006
D1007
D1008
D1009
D1010
D1011
D1012
D1013
D1014
D1015
D1016
D1017
D1018
D1019
D1020
D1021
D1022
D1023
D1024
D1025
D1026
D1027
D1028
D1029
D1030
D1031
D1032
D1033
D1034
D1035
D1036
D1037
D1038
D1039
D1040
D1041
D1042
D1043
D1044
D1045
D1046
D1047
D1048
D1049
D1050
D1051
D1052
D1053
D1054
D1055
D1056
D1057
D1058
D1059
D1060
D1061
D1062
D1063
D1064
D1065
D1066
D1067
D1068
D1069
D1070
D1071
D1072
D1073
D1074
D1075
D1076
D1077
D1078
D1079
D1080
D1081
D1082
D1083
D1084
L1000
L1001
L1002
L1003
L1004
L1005
L1006
L1007
L1008
L1009
L1010
L1011
L1012
L1013
L1014
L1015
L1016
L1017
L1018
L1019
L1020
L1021
L1022
L1023
L1024
L1025
L1026
L1027
L1028
L1029
L1030
L1031
L1032
L1033
L1034
L1035
L1036
L1037
L1038
L1039

HIF-1
SUFFIX: -23

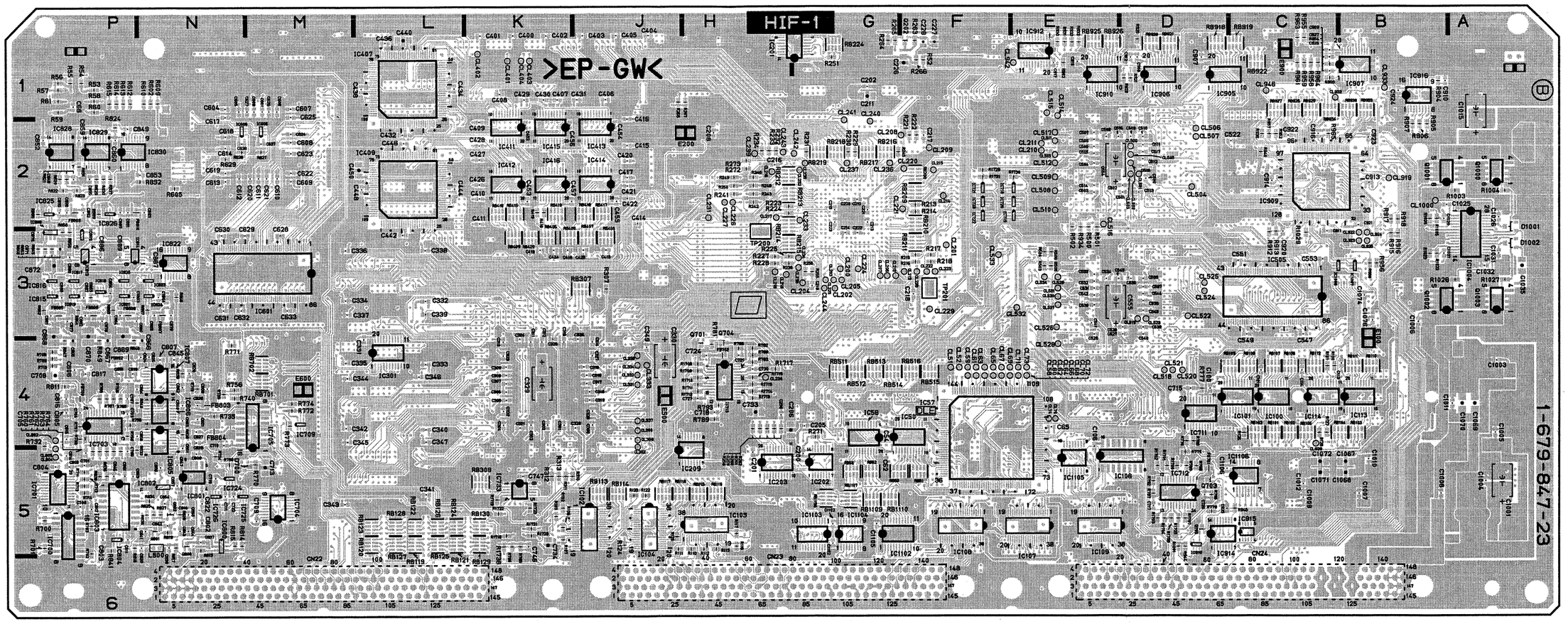

HIF-1 -B SIDE-
SUFFIX: -23

4-49 (c)

HIF-1 (1-679-847-22)

C54	*G4	C335	*M4	C519	C3	C716	D4	C862	*N4	C1039	B3	CL242	*G2	CL604	N1	CN24	C6	IC414	*J2	IC916	*B1	R127	*C4	R402	J1	R745	N5	R841	*P5	R1006	*B2	RB217	*G2	RB923	D1
C55	F4	C336	*M3	C520	C2	C717	*D5	C863	*P5	C1064	A3	CL243	*H2	CL605	M1	CN200	G1	IC415	*K1	IC919	*D5	R128	*C4	R403	J1	R746	N5	R842	P3	R1009	B3	RB218	*G2	RB924	D1
C57	F4	C337	*M3	C521	C3	C718	*H4	C864	*P4	C1065	A3	CL244	*G3	CL606	M1	CN900	E1	IC416	*K2	IC1000	B5	R129	F5	R404	J2	R747	N5	R843	P3	R1016	B2	RB219	*G2	RB925	*E1
C59	F4	C338	*L3	C522	*C2	C719	*N5	C865	*P4	C1066	A4	CL300	*J4	CL607	N3			IC500	D2	IC1001	A5	R130	F5	R405	J2	R748	N5	R844	P3	R1021	B3	RB220	G2	RB926	*E1
C60	F5	C339	*L3	C523	C2	C720	*D5	C866	*N4	C1067	*B5	CL301	K5	CL608	N3	D700	*N5	IC501	C3	IC1002	C5	R200	F3	R406	J2	R749	N5	R845	*P3	R1022	*B3	RB221	G2	RB927	*C1
C61	F4	C340	*L4	C524	C1	C721	*H4	C867	*P4	C1068	*B5	CL302	*J5	CL609	N3	D1000	A2	IC502	C2	IC1004	*A2	R201	F3	R407	J2	R750	N5	R846	*P3	R1023	*B3	RB222	G2	RB928	*C1
C62	*G5	C341	*L5	C525	C2	C722	*N5	C868	*P3	C1069	*A4	CL303	J5	CL610	N3	D1001	*A3	IC503	D3	IC1005	B4	R202	F2	R408	J2	R751	N5	R847	*P4	R1026	*A3	RB223	G2	RB929	*C1
C63	F5	C342	*M4	C526	C1	C723	D5	C869	*P3	C1070	*A4	CL304	K5	CL611	N3	D1002	*A3	IC504	C3	IC1006	B3	R203	F2	R409	J2	R752	N5	R848	*P4	R1027	*A3	RB224	*G1	RB930	*B1
C64	F4	C343	*M5	C527	*D3	C724	*H4	C870	*P3	C1071	*C5	CL305	K5	CL612	N3	D1003	A3	IC505	*C3	IC1007	*B3	R204	F2	R418	*K2	R753	N4	R849	*P4	R1028	B3	RB300	G3	RB931	D5
C65	*E4	C344	*M4	C528	*D3	C725	F3	C871	*P3	C1072	*C5	CL306	K5	CL613	N3			IC600	M2	IC1008	*C3	R205	F2	R419	*K2	R754	N4	R850	P3	R1029	*C3	RB301	G3	RB932	D5
C66	D5	C345	*M4	C529	*E3	C726	D5	C872	*P3	C1073	B4	CL307	K5	CL614	N3	E100	*B4	IC601	*M3	IC1100	M4	R207	H2	R500	*E3	R755	N4	R851	P3	R1700	*D5	RB302	G3	RB933	*B1
C67	E5	C346	*L4	C530	*E3	C727	*H4	C873	P3	C1074	*B3	CL308	K5	CL615	N3	E200	*H2	IC602	N3	IC1101	M4	R208	H2	R501	*E3	R756	*N4	R852	P3	R1701	*D5	RB303	G3	RB934	*C1
C68	*P1	C347	*L4	C531	*E3	C728	K5	C874	P3	C1075	B3	CL309	*J4	CL616	N3	E300	L3	IC603	M3	IC1102	*G5	R209	H3	R502	*E3	R757	*P4	R853	*P3	R1702	*D5	RB304	G3	RB935	B3
C100	*D4	C348	J5	C532	*E3	C729	D5	C875	P3	C1076	*B3	CL310	K5	CL700	P5	E400	N3	IC604	M3	IC1103	*G5	R210	H3	R503	*E3	R758	*P4	R854	P3	R1703	*D5	RB305	K3	RB1100	M4
C101	*C4	C349	*J4	C533	*E3	C730	*H4	C876	*P3	C1100	M4	CL311	K5	CL701	P5	E500	*J4	IC605	*M2	IC1104	*G5	R211	H3	R504	*E3	R759	*P4	R855	P3	R1704	*D5	RB306	J3	RB1101	M4
C102	J5	C400	*K1	C534	*E3	C731	K5	C877	*P3	C1101	M4	CL312	K5	CL702	P5	E600	*M4	IC606	*N2	IC1105	*E5	R212	H3	R505	*E3	R760	*P5	R856	*P3	R1705	*D5	RB307	*J3	RB1102	M4
C103	H5	C401	*K1	C535	*D3	C732	D5	C878	*P3	C1102	*G5	CL313	K5	CL703	P5	E700	L1	IC700	*P5	IC1106	*C5	R213	*F2	R506	*E3	R761	*P5	R857	P3	R1706	*D5	RB308	K3	RB1103	M4
C104	J5	C402	*K1	C536	*D3	C733	*H4	C879	*N3	C1103	*G5	CL314	K5	CL704	P4	E900	*C1	IC701	*P5			R214	*F2	R600	N1	R762	*P5	R858	*P3	R1707	*D5	RB309	*K5	RB1104	G5
C105	E5	C403	*J1	C537	*D3	C734	*K5	C880	*P3	C1104	E4	CL315	K5	CL705	N5			IC702	P4	L50	D5	R215	*F3	R601	N1	R763	*P5	R859	P2	R1708	*H4	RB400	K1	RB1105	G5
C106	*E5	C404	*J1	C538	*D3	C735	D5	C881	*P3	C1105	*G5	CL316	K5	CL706	P4	F1000	B5	IC703	*P4	L51	E5	R216	*F3	R602	*N1	R764	*P5	R860	P2	R1709	*H4	RB401	K1	RB1106	*G5
C107	E5	C405	*J1	C539	*D3	C736	F3	C882	*P3	C1106	*D5	CL317	K5	CL707	N4	F1001	B5	IC704	*M5	L800	*N5	R217	*F3	R603	N1	R765	*P4	R861	N2	R1710	*H4	RB402	K1	RB1107	*G5
C108	F5	C406	*J1	C540	*D3	C737	H4	C883	*N3	C1800	P3	CL318	K5	CL708	N4			IC705	*M4	L1000	B4	R218	*F3	R604	M1	R766	*P4	R862	*P3	R1711	*H4	RB403	L1	RB1108	E4
C109	E5	C407	*K1	C541	*E3	C738	F3	C884	*P3	C1801	P3	CL319	K5	CL709	N5	FB700	*P4	IC707	M5	L1001	A4	R219	G2	R605	*N2	R767	*P4	R863	*P3	R1712	*H4	RB404	K1	RB1109	*G5
C110	L6	C408	*K1	C542	*E3	C740	E2	C885	P2	C1802	N3	CL320	K5	CL710	N5	FB701	*D5	IC708	M5	L1002	A5	R220	G2	R606	N1	R768	*P4	R864	*P3	R1713	*H4	RB405	*K3	RB1110	*G5
C111	L6	C409	*K2	C543	*E3	C741	E2	C886	*P3	C1803	*P3	CL321	K5	CL711	N5	FB702	*H4	IC709	*M4	L1003	A5	R221	*F2	R607	N1	R769	*N5	R865	*P3	R1714	*H4	RB406	*K3	RB1111	G5
C112	K6	C410	*K2	C544	*D3	C742	E2	C887	*N3	C1804	*N3	CL322	K5	CL712	P5	FB800	N5	IC710	D4	L1004	A2	R222	*F2	R608	N1	R770	*M5	R866	*N3	R1715	*H4	RB407	*J3	RB1112	G5
C113	*B4	C411	*K2	C545	*D3	C743	F2	C888	*P3	C1805	P3	CL323	K5	CL713	N4	FB801	N5	IC711	*D4	L1005	A2	R223	*H2	R609	*N1	R771	*N4	R867	*N3	R1716	*H4	RB408	*J3	RB1113	H5
C114	*C4	C412	K3	C546	C3	C744	F2	C889	*P3			CL324	K5	CL714	P5	FB802	*P4	IC712	*D5	L1006	A3	R224	*H2	R610	*N1	R772	*M4	R868	*P2	R1717	*H4	RB409	*K3		
C200	*G5	C413	*J3	C547	*C3	C745	F2	C890	*P2	CL51	*F4	CL325	K5	CL715	N4	FB803	*N4	IC713	*H4	L1007	B4	R225	*H3	R611	M1	R773	*M4	R869	*P2	R1718	*K5	RB410	J1	RV800	P2
C201	*H5	C414	*J2	C548	C3	C746	*K5	C891	*P2	CL52	*F4	CL326	K5	CL716	N4	FB804	*N4	IC715	D5			R226	*H3	R612	*P1	R774	*M4	R900	B1	R1719	*K5	RB411	K1	RV801	N2
C202	*G1	C415	*J2	C549	*C3	C800	N4	C892	*P2	CL56	J6	CL327	K5	CL717	N4	FB805	*P3	IC716	H4	Q200	H1	R227	*H3	R613	*P1	R775	*D5	R901	B1	R1720	*K5	RB412	J1		
C203	G1	C416	*J2	C550	C3	C801	N4	C893	*N2	CL57	J6	CL328	K5	CL718	N4	FB806	*P3	IC718	*B2	Q201	H1	R228	*H3	R614	*P1	R776	*D4	R902	*E1	R1721	*K5	RB413	J1	S50	F1
C204	H4	C417	*J2	C551	*C3	C802	*N5	C894	*P3	CL58	*F4	CL329	K5	CL719	N5	FB807	*N3	IC719	*B2	Q202	*F1	R229	*G2	R615	*P1	R777	*D4	R904	*B1	R1722	*K5	RB414	J1	S900	C1
C205	*G4	C418	*K3	C552	C3	C803	*P5	C895	*P2	CL59	*F4	CL330	K5	CL720	N5	FB808	*P3	IC720	*B2	Q203	G1	R230	*G2	R616	N1	R778	D4	R905	*B2	R1723	*K5	RB415	*K2		
C206	*H4	C419	*K3	C553	*C3	C804	*P5	C896	*P3	CL60	*F4	CL331	*J4	CL721	N4	FB809	*P2	IC721	*F2	Q700	*D5	R231	*G2	R617	M1	R779	*D5	R906	*B2	R1729	*F2	RB416	*K2	TP100	P5
C207	G5	C420	*J2	C554	*E2	C805	*P4	C897	*P3	CL61	*F4	CL332	*J4	CL722	N5	FB810	*P2	IC722	*F2	Q701	*H4	R232	*H2	R618	M1	R780	*D4	R907	*B2	R1730	*E2	RB417	*J2	TP101	N5
C208	*H2	C421	*J2	C555	*E3	C806	*P4	C898	N3	CL62	*F4	CL333	*J4	CL723	N5			IC723	*F2	Q703	*D5	R233	*H2	R619	M1	R781	*H4	R908	D5	R1731	*F2	RB418	*J2	TP102	M5
C209	H1	C422	*J2	C600	M1	C807	*N4	C899	*P2	CL63	*F4	CL334	*J4	CL724	N5	IC50	*G5	IC724	*N5	Q704	*H4	R234	*H2	R620	N3	R782	*H4	R909	D5	R1738	*K5	RB419	*K2	TP400	F1
C210	H4	C423	*J3	C601	*M1	C808	*N4	C900	B1	CL64	*F4	CL335	J4	CL725	P5	IC52	E4	IC725	*N5	Q800	*N5	R235	G2	R621	N3	R783	*H4	R910	D5	R1739	F3	RB420	*K3	TP401	F1
C211	*G1	C424	*K3	C602	M1	C809	*N5	C902	C2	CL65	*F4	CL336	J4	CL726	P5	IC53	F5	IC726	*N5	Q801	*N5	R236	G2	R622	M3	R785	*K5	R911	D5			RB500	E2	TP600	M1
C212	*G2	C425	K3	C603	*M1	C810	*N5	C903	C2	CL66	*F4	CL337	*J4	CL727	P5	IC54	E5	IC727	F3	Q802	*N5	R237	G2	R623	M3	R786	D5	R912	*C3	RB50	*G5	RB501	F2	TP601	M1
C213	*G2	C426	*K2	C604	*N1	C811	*P5	C904	C2	CL67	*F4	CL338	*J4	CL728	P5	IC55	F5	IC728	F3	Q1000	*A2	R238	H2	R624	N3	R787	*D5	R913	*C3	RB51	*F5	RB502	F1	TP700	M4
C214	*G3	C427	*K2	C605	*N1	C812	*P5	C905	C1	CL68	*F4	CL339	J5	CL729	P5	IC56	*G4	IC729	F3	Q1001	*B2	R239	H2	R625	N3	R788	*H4	R915	*B3	RB52	*G5	RB503	E2	TP701	M4
C215	*G2	C428	*K2	C606	*M1	C813	*P5	C907	*D1	CL69	*F4	CL340	J5	CL730	P5	IC57	*F4	IC730	K5	Q1002	*B3	R240	H2	R626	N3	R789	*H4	R916	*B3	RB53	*G5	RB504	F2	TP702	P1
C216	*H2	C429	*K1	C607	*M1	C814	*P5	C908	*D1	CL70	*E4	CL341	J5	CL800	P5	IC58	P1	IC731	K5	Q1003	*A3	R241	*H2	R627	*M2	R790	*K5	R917	*B2	RB100	*C4	RB505	E3	TP703	D5
C217	*F2	C430	*K1	C608	*M2	C815	*P4	C909	*C1	CL71	*E4	CL342	J5	CL801	P5	IC59	D4	IC732	K5			R242	*H2	R628	*N2	R792	*D5	R918	*B2	RB101	*C4	RB506	E3	TP704	H4
C218	*F3	C431	*J1	C609	*M2	C816	*P4	C910	*B1	CL72	*E4	CL400	J2	CL802	*P4	IC60	E5	IC800	*N5	R50	F4	R243	*H2	R629	*N2	R793	*H4	R919	D1	RB102	*C4	RB507	E3	TP705	K5
C219	*G3	C432	*L2	C610	*M2	C817	*P4	C911	*C3	CL73	*E4	CL401	*K1	CL803	P5	IC100	*C4	IC801	*N5	R51	E4	R244	G2	R700	*P5	R795	*D5	R920	*D1	RB103	*B4	RB508	E3	TP800	P5
C220	*G2	C433	L2	C611	*M2	C818	*P4	C912	*D1	CL74	*E4	CL402	*K1	CL804	*P5	IC101	*D4	IC802	*N5	R52	*F1	R245	*G2	R701	*P5	R796	*H4	R921	*D1	RB104	*B4	RB509	E4		
C221	*G2	C434	*L1	C612	*N2	C819	*P4	C913	*B2	CL75	*E4	CL403	*K1	CL805	*P5	IC102	*J5	IC803	*P5	R53	*P1	R246	*H2	R702	*P5	R798	*D5	R922	*D1	RB105	*C4	RB510	E3	X800	P3
C222	*G3	C435	L1	C613	*N2	C820	*N4	C914	*C2	CL200	*G3	CL404	*K1	CL806	N5	IC103	*H5	IC804	*P5	R54	*P1	R247	F2	R703	*P5	R799	*D5	R923	D1	RB106	*C4	RB511	*G4	X801	P3
C223	*G2	C436	*L1	C614	*N2	C821	*N4	C915	*E1	CL201	*F3	CL405	J1	CL807	P5	IC104	*J5	IC805	*N4	R55	*P1	R248	*H2	R704	P5	R800	P5	R924	C1	RB107	*C4	RB512	*G4	X802	N3
C226	*F1	C437	L1	C615	N1	C822	*N5	C916	*C2	CL202	*G3	CL406	J1	CL808	P5	IC105	E5	IC806	*N4	R56	*P1	R249	*H2	R705	P5	R801	P5	R925	D1	RB108	*C4	RB513	*G4	X803	P3
C227	*F1	C438	*L1	C616	N2	C823	N5	C917	*E1	CL203	*G3	CL500	*D2	CL809	P5	IC106	*E5	IC807	*N4	R57	*P1	R250	*H2	R706	N5	R802	P5	R926	D1	RB109	*C4	RB514	*G4	X804	P3
C228	*F1	C439	L1	C617	*N1	C824	*N4	C918	E1	CL204	*G3	CL501	*D2	CL810	P5	IC107	*E5	IC808	*P3	R58	*P1	R251	*G1	R707	N5	R803	P4	R927	B1	RB110	*B4	RB515	*F4	X805	P3
C229	J4	C440	*L1	C618	*N2	C825	*N4	C919	D5	CL205	*G3	CL502	*D2	CL811	P5	IC108	*F5	IC809	*P3	R59	*P1	R252	H1	R708	*P4	R804	P4	R928	B1	RB111	*B4	RB516	*F4		
C230	*H4	C441	L1	C619	*N2	C826	*N4	C920	*C3	CL206	*G3	CL503	*D2	CL812	P5	IC109	*E5	IC810	P3	R60	*P1	R253	H4	R709	*P4	R805	P4	R930	*E1	RB112	*C4	RB600	M3	*:B SIDE	
C300	*J4	C442	*L3	C620	*M2	C827	*N4	C921	*B2	CL207	*G3	CL504	*D2	CL813	P4	IC110	L5	IC811	P3	R61	*P1	R254	H1	R710	*P4	R806	P4	R931	*E1	RB113	*J5	RB601	N3		
C301	*K4	C443	L3	C621	*M2	C828	*N4	C922	*C2	CL208	*F2	CL505	*D2	CL814	P4	IC111	L5	IC812	P3	R62	D5	R255	*G3	R711	*P5	R807	P4	R932	*E1	RB114	*J5	RB602	M3		
C302	*K4	C444	*L2	C622	*M2	C829	N5	C923	*B2	CL209	*F2	CL506	*D2	CL815	P4	IC112	L5	IC813	*P3	R63	E5	R256	*G3	R712	*P5	R808	P4	R933	*E1	RB115	*H5	RB603	M3		
C303	*K4	C445	L2	C623	*M2	C830	N5	C924	*B1	CL210	*E2	CL507	*D2	CL816	P4	IC113	*B4	IC814	*P3	R64	D5	R257	J5	R713	*P5	R809	P4	R934	*E3	RB116	*H5	RB604	N3		
C304	*K4	C446	*L2	C624	*M2	C831	N5	C925	*D5	CL211	*E2	CL508	*E2	CL817	P4	IC114	*C4	IC815	*P3	R65	E5	R258	*H4	R714	*P5	R810	P4	R936	*C2	RB117	*J5	RB605	N3		
C305	*K4	C447	L2	C625	*M1	C832	N5	C926	*C1	CL212	*G3	CL509	*E2	CL818	P4	IC200	G2	IC816	*P3	R66	F4	R259	*H4	R715	P4	R811	*P4	R940	*C2	RB118	*J5	RB606	M3		
C306	*K4	C448	*L2	C626	*M1	C833	*N4	C927	*C1	CL213	*F3	CL510	*E2	CL819	P4	IC201	*G1	IC817	*P3	R67	E4	R260	*H4	R716	P5	R812	N5	R942	B1	RB119	*L5	RB607	M3		
C307	*K4	C449	L2	C627	*M1	C834	N5	C1000	A4	CL214	*F2	CL511	*E2	CL820	P4	IC202	*G5	IC818	*P3	R68	F4	R261	*H4	R717	P5	R813	*N5	R943	B1	RB120	*L5	RB608	M3		
C308	*K4	C450	*L2	C628	*M3	C835	N5	C1001	*A5	CL215	*F2	CL512	*E2	CL821	P4	IC203	*H5	IC819	*P3	R100	*C4	R262	*H4	R718	N4	R814	*N5	R944	*D5	RB121	*L5	RB609	M3		
C309	*K4	C451	L2	C629	*N3	C836	N5	C1002	A4	CL216	*H2	CL513	*E2	CL822	P5	IC204	H1	IC820	*P3	R101	*C4	R263	*F1	R719	*N4	R815	*N5	R945	*C5	RB122	*L5	RB700	P5		
C310	*K4	C452	*K2	C630	*N3	C837	*N5	C1003	*A4	CL217	*H2	CL514	*E1	CL823	P5	IC205	G5	IC821	*P3	R102	*K5	R264	*G1	R720	N4	R816	N5	R946	C1	RB123	*L5	RB701	*M4		
C311	*K4	C453	*K2	C631	*N3	C838	*N5	C1004	*A5	CL218	*H3	CL515	*E1	CL824	N4	IC206	H2	IC822	*N3	R103	*K5	R265	*G1	R721	N4	R817	*N5	R947	C1	RB124	*L5	RB702	*M4		
C312	*K4	C454	*J2	C632	*N3	C839	*N5	C1005	*A4	CL219	*H3	CL516	*E2	CL825	N4	IC207	H1	IC823	*N3	R104	J5	R266	*F1	R722	M4	R818	*P5	R948	C2	RB125	*L5	RB703	M5		
C313	*K4	C455	*J2	C633	*M3	C840	*N4	C1006	*B3	CL220	*F2	CL517	*E2	CL826	N5	IC208	H4	IC824	*N3	R105	J5	R267	*H1	R723	M4	R819	*N5	R949	E5	RB126	*L5	RB704	M5		
C314	*J4	C456	*K2	C634	N3	C841	*N5	C1007	*B5	CL221	*F2	CL518	*D4	CL919	*B2	IC209	*J5	IC825	*P2	R106	*K5	R268	*J1	R724	M4	R820	*P2	R950	E5	RB127	*L5	RB705	M5		
C315	*J4	C457	*K2	C635	N3	C842	*N5	C1008	*B5	CL222	*F3	CL519	*D3	CL922	*B3	IC300	K4	IC826	*P2	R107	*K5	R269	F3	R725	M4	R821	*P2	R951	D5	RB128	*L5	RB706	M5		
C316	*J4	C500	*D2	C636	M3	C843	*N5	C1009	*C5	CL223	*F3	CL520	*D4	CL923	*B3	IC301	*L4	IC827	P2	R108	K5	R271	*G4	R726	P6	R822	*P2	R952	*C2	RB129	*K5	RB900	B2		
C317	*J4	C501	*D2	C637	*M2	C844	*N5	C1010	*B5	CL224	*G3	CL521	*D4	CL924	*B3	IC302	L3	IC828	*P2	R109	J5	R272	*H2	R727	P6	R823	*P2	R953	*C1	RB130	*K5	RB901	B2		
C318	*J4	C502	*D2	C638	*N2	C845	*N4	C1011	*A4	CL225	*G3	CL522	*D3	CL925	*B3	IC303	L4	IC829	*P2	R110	*H5	R273	*H2	R728	P6	R824	*P2	R954	*C1	RB200	F3	RB902	B2		
C319	*J4	C503	*E2	C700	*P5	C846	*P5	C1012	*C5	CL226	*H2	CL523	*D3	CL932	*C1	IC304	L4	IC830	*P2	R111	*J5	R300	J5	R729	N5	R825	*N5	R955	*C1	RB201	F3	RB903	B1		
C320	*J4	C504	*E2	C701	*P5	C847	*N5	C1015	*A1	CL227	*H2	CL524	*D3	CL933	*B1	IC305	L5	IC900	B2	R112	*H5	R301	J5	R730	P4	R826	*N4	R956	*B3	RB202	F3	RB904	B3		
C321	*K4	C505	*E2	C702	N5	C848	*P2	C1017	A2	CL228	*F3	CL525	*D3	CL939	*C4	IC400	K2	IC901	B2	R113	*H5	R302	G3	R731	P4	R827	*N5	R957	*C2	RB203	F2	RB905	B2		
C322	*K4	C506	*E2	C703	*P4	C849	*P2	C1019	A2	CL229	*F3	CL526	*E3	CL942	*E1	IC401	K1	IC902	B2	R114	H5	R303	G3	R732	*P4	R828	*N5	R958	*C1	RB204	H2	RB906	B2		
C323	*K4	C507	*E2	C704	*P4	C850	*N5	C1021	B3	CL230	*H4	CL527	*E3	CL943	G4	IC402	K1	IC903	B1	R115	H5	R304	J3	R733	*P4	R829	*P2	R959	*C1	RB205	H2	RB908	B2		
C324	*K4	C508	*E2	C705	*P5	C851	*N5	C1022	B3	CL231	*H2	CL528	*E4	CL946	*C1	IC403	K1	IC905	*D1	R116	*H5	R305	J3	R734	*N5	R830	*P2	R960	*B3	RB206	H2	RB909	B3		
C325	*K4	C509	*D2	C706	*P5	C852	*P2	C1025	*B2	CL232	*G2	CL529	*E3	CL947	C1	IC404	J1	IC906	*D1	R117	*H5	R306	K3	R735	*N4	R831	*P2	R961	*C1	RB207	H3	RB910	B2		
C326	*J4	C510	*D2	C707	*P4	C853	*N2	C1026	*A2	CL233	*G2	CL530	*E3	CL1000	*B2	IC405	J1	IC907	*B1	R118	J5	R307	*J3	R736	N4	R832	*N2	R962	B1	RB208	*F2	RB911	B2		
C327	*J4	C511	*D2	C708	*P4	C854	*N5	C1029	*B2	CL234	*G3	CL531	*E3	CL1002	D4	IC406	J1	IC908	D1	R119	J5	R308	J3	R737	N4	R833	*P5	R963	*C1	RB209	*F2	RB912	B2		
C328	*J4	C512	*D2	C709	*M5	C855	*P2	C1031	*A3	CL235	*G3	CL532	*E3	CL1003	D4	IC407	*L1	IC909	*C2	R120	J5	R309	J3	R738	N4	R834	*N5	R964	*C1	RB210	*F2	RB913	B2		
C329	*K4	C513	*D2	C710	*N4	C856	*N5	C1032	*A3	CL236	*G2	CL533	*F3			IC408	L1	IC910	*E1	R121	J5	R310	*K5	R739	*N4	R835	*P5	R965	*C2	RB211	*F3	RB914	B1		
C330	*J4	C514	*E2	C711	*N5	C857	*N5	C1033	B2	CL237	*G2	CL534	*E3	CN2	B4	IC409	*L2	IC911	E1	R122	*J5	R311	*K5	R740	*N4	R836	*P5	R1000	B2	RB212	*H2	RB918	*D1		
C331	*L4	C515	*E2	C712	M5	C858	*P4	C1034	B2	CL238	*G2	CL600	N1	CN3	E4	IC410	L2	IC912	*E1	R123	*J5	R312	*K5	R741	N4	R837	*P2	R1001	*D5	RB213	*H2	RB919	*C1		
C332	*L3	C516	*E2	C713	*M5	C859	*P2	C1035	*A3	CL239	*H2	CL601	M1	CN4	G4	IC411	*K1	IC913	E5	R124	*J5	R313	*K5	R742	N5	R838	*N5	R1003	*A2	RB214	*H2	RB920	*D1		
C333	*L4	C517	*D2	C714	M5	C860	*P2	C1037	*B3	CL240	*G2	CL602	M1	CN22	M6	IC412	*K2	IC914	*D5	R125	*J5	R400	K1	R743	N5	R839	*N4	R1004	*A2	RB215	*H3	RB921	*D1		
C334	*M3	C518	*D2	C715	*D4	C861	*P5	C1038	B3	CL241	*G2	CL603	N1	CN23	H6	IC413	*J1	IC915	*C5	R126	*C4	R401	K1	R744	N5	R840	*P4	R1005	*B2	RB216	*G2	RB922	*C1		

HIF-1
SUFFIX: -22

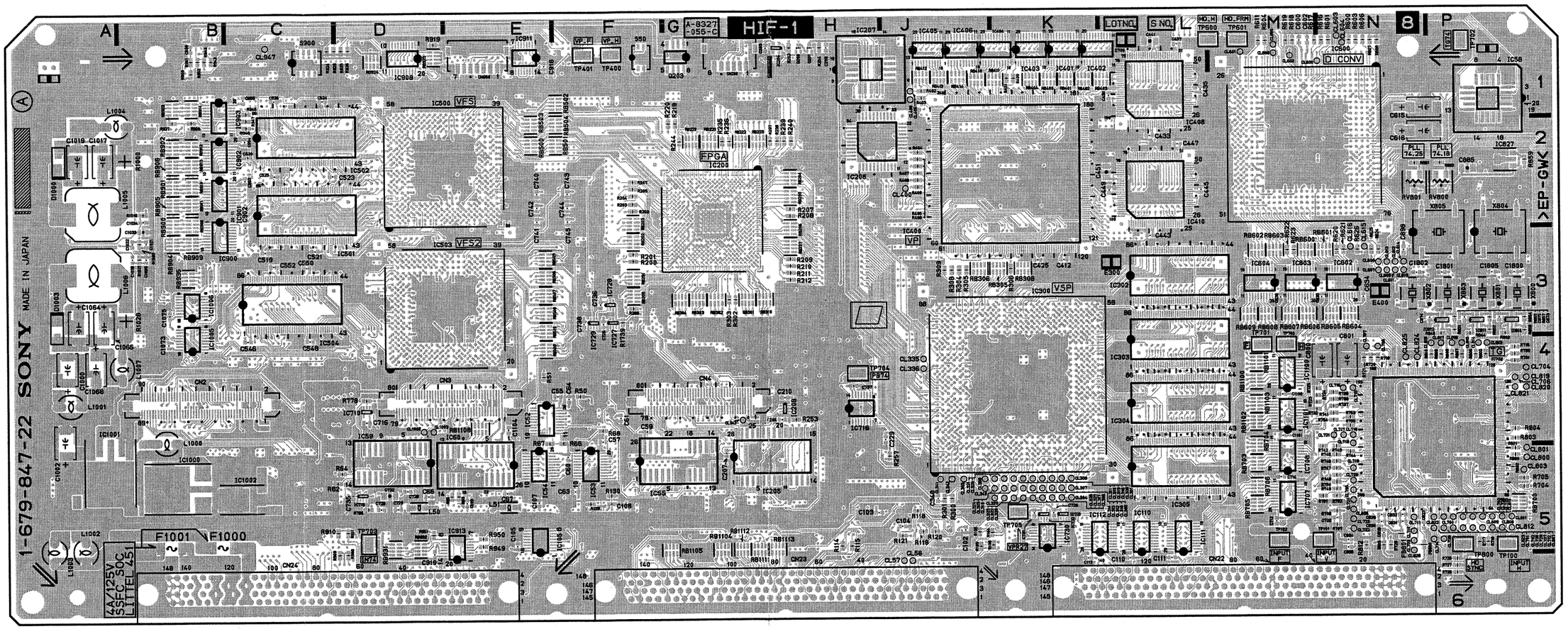

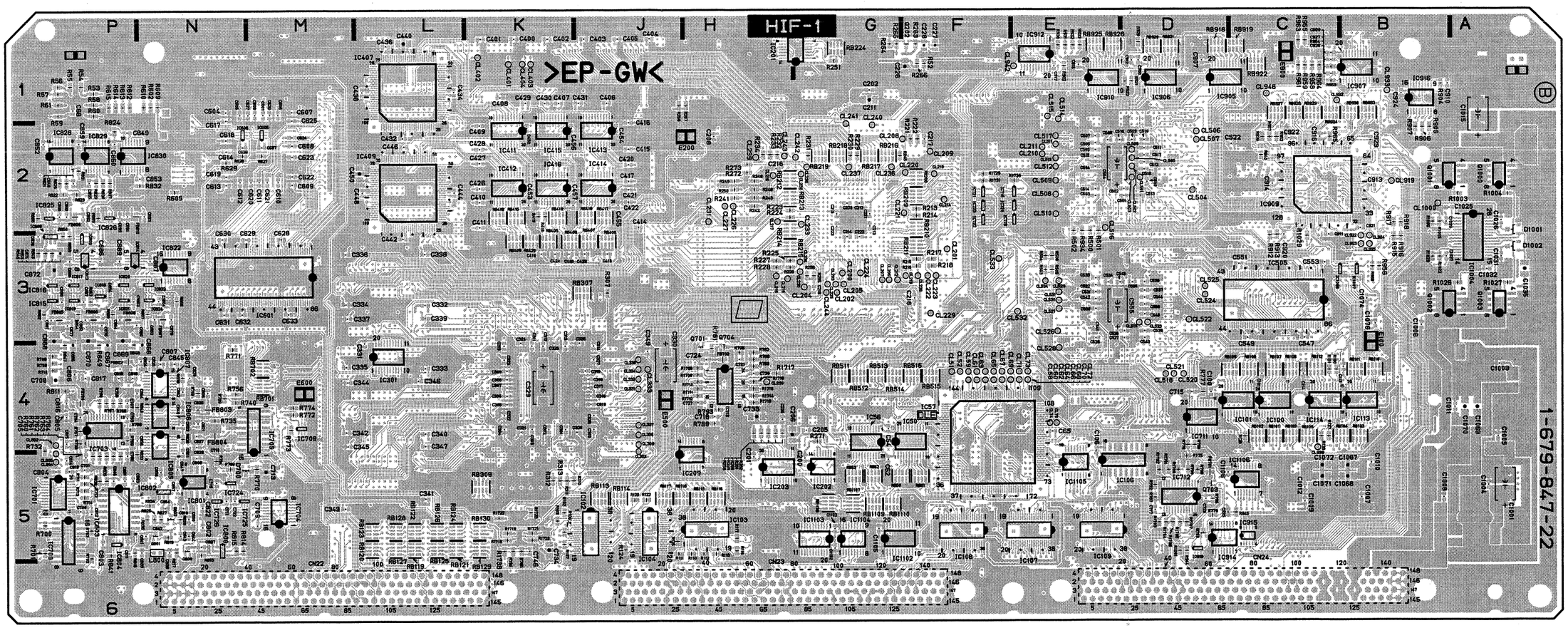

HIF-1 -B SIDE-
SUFFIX: -22

HIF-1 (1-679-847-21)

C54	*G4	C308	*L3	C506	*G2	C720	*N4	C872	P3	CL68	*E4	CL802	P5	IC51	F4	IC705	*N5	R51	E4	R209	*J5	R418	*H1	R745	P5	R902	*D1	RB123	*C4	RB900	B2
C55	F4	C309	*L4	C507	*G2	C721	*N4	C873	*P3	CL69	*E4	CL803	P5	IC52	E4	IC706	*N4	R52	G1	R210	*H5	R419	*H1	R746	P5	R904	*B1	RB124	*C4	RB901	B2
C56	F4	C310	*L5	C508	*G2	C722	*P5	C874	*P3	CL70	*E4	CL804	P5	IC53	F5	IC707	*P5	R53	*P1	R211	*H5	R500	*F2	R747	N5	R905	*B2	RB125	*B4	RB902	B2
C57	F4	C311	*M4	C509	*G2	C723	*P4	C875	*P3	CL71	*E4	CL805	P5	IC54	E5	IC708	*N4	R54	*P1	R212	H5	R501	F2	R748	P4	R906	*B2	RB126	*B4	RB903	B1
C59	F4	C312	*M5	C510	*G2	C724	*N4	C880	*P2	CL72	*E4	CL806	P5	IC55	G5	IC709	*P5	R55	*P1	R213	H5	R502	F2	R749	P4	R907	*B2	RB127	*C4	RB904	B3
C60	F5	C313	*M4	C511	*G2	C725	N5	C881	*P2	CL73	*E4	CL807	P5	IC56	*G4	IC710	*M5	R56	*P1	R214	*H5	R503	F2	R750	*P4	R908	D5	RB132	C3	RB905	B2
C61	F4	C314	*M4	C512	*F2	C726	N5	C882	*P2	CL74	E4	CL808	P4	IC57	*F4	IC712	P4	R57	*P1	R215	*H5	R504	F4	R751	*P4	R909	D5	RB133	C3	RB906	B2
C62	*G5	C315	*L4	C513	*F2	C727	*M5	C883	*N2	CL75	E4	CL809	P4	IC58	P1	IC715	*P4	R58	*P1	R216	*J5	R505	F3	R752	*N5	R910	D5	RB134	C3	RB908	B2
C63	F5	C316	*L4	C514	*G2	C732	*P4	C884	*P2	CL150	*E3	CL810	P4	IC59	D5	IC716	*M4	R59	*P1	R217	*J5	R506	F3	R754	*N4	R911	D5	RB135	B3	RB909	B3
C64	F4	C317	J5	C515	*F2	C733	*P4	C885	*P2	CL151	*E3	CL811	P5	IC60	E5	IC719	M5	R60	*P1	R218	J5	R507	F3	R755	N4	R912	*C3	RB136	B3	RB910	B2
C65	*E4	C318	*J4	C516	*G2	C734	*P5	C886	*P2	CL200	J4	CL812	P5	IC100	*D4	IC720	M5	R61	*P1	R219	J5	R600	N1	R756	N4	R913	*C3	RB200	J4	RB911	B2
C66	D5	C319	*K4	C517	*G2	C735	*P5	C900	B1	CL201	J4	CL813	N4	IC101	*C5	IC721	M4	R62	D5	R220	J5	R601	N1	R757	N4	R915	*B3	RB201	J4	RB912	B2
C67	E5	C320	*K4	C518	*G2	C736	*N4	C902	C2	CL202	J5	CL814	N4	IC102	*C3	IC722	M4	R63	E5	R221	J5	R602	*N1	R758	N5	R916	*B3	RB202	J4	RB913	B2
C68	*P1	C321	*K4	C519	*F3	C737	*P4	C903	C2	CL203	J5	CL815	N5	IC103	*C3	IC723	*M4	R64	D5	R222	*J5	R603	N1	R759	N4	R917	*B2	RB203	J5	RB914	B1
C100	C3	C322	*K4	C520	*G3	C738	*P4	C904	C2	CL204	J3	CL816	P5	IC104	*C4	IC724	*N4	R65	E5	R223	*H4	R604	M1	R760	*N4	R918	*B2	RB204	J5	RB918	*C1
C101	*B3	C323	*K4	C521	*F3	C745	M5	C905	C1	CL205	H3	CL817	P5	IC105	*C4	IC800	*P3	R66	F4	R224	*H4	R605	N2	R761	N5	R919	D1	RB205	J5	RB919	*C1
C102	C4	C324	*K4	C522	*F3	C746	M5	C907	*D1	CL206	H3	CL820	P4	IC107	*E5	IC801	P3	R67	E4	R225	*H4	R606	*L2	R769	*P4	R920	*D1	RB206	J4	RB920	*D1
C103	B4	C325	*K4	C523	*G3	C747	M4	C908	*D1	CL300	J4	CL821	P4	IC108	*F5	IC802	*P3	R68	D5	R226	*H4	R607	N1	R772	*P4	R921	*D1	RB207	*L5	RB921	*D1
C104	E5	C326	*K4	C524	*G3	C748	M4	C909	*C1	CL301	K5	CL822	P4	IC109	*E5	IC803	P2	R69	E5	R231	*H4	R608	N1	R775	*P4	R922	*D1	RB208	*L5	RB922	*C1
C105	F5	C327	*K4	C525	*G3	C749	*M5	C910	*B1	CL302	J5	CL823	P4	IC113	*D5	IC804	*N3	R100	*C5	R232	*H4	R609	N1	R776	*P5	R923	C1	RB209	*L5	RB923	D1
C106	E5	C328	*K4	C526	*G3	C750	N5	C911	*C3	CL303	J5	CL824	P4	IC114	*D5	IC805	*N3	R101	*D4	R233	*H4	R610	*N1	R777	*P5	R924	C1	RB210	*L5	RB924	D1
C110	*E5	C329	*K4	C527	*G3	C751	*N4	C912	*D1	CL304	K5	CL825	P4	IC115	D5	IC806	*P3	R102	*D4	R234	*H4	R611	*N1	R778	*P5	R925	C1	RB211	*L5	RB925	*D1
C111	*C5	C330	*K4	C528	*F3	C800	N4	C913	*B2	CL305	K5	CL826	*P4	IC116	E4	IC807	*P3	R103	*C5	R235	*H4	R612	M1	R779	*P5	R926	C1	RB212	*L5	RB926	*D1
C112	*D4	C331	*K4	C529	*G3	C801	N4	C914	*C2	CL306	K5	CL827	*P5	IC117	D4	IC808	*P3	R104	*D4	R236	*H4	R613	*P1	R780	*P5	R927	B1	RB213	*L5	RB927	*C1
C132	*D5	C332	*J4	C530	*G3	C802	*N5	C915	*E1	CL307	K5	CL828	*P5	IC118	D4	IC809	*P3	R105	*D4	R237	*H4	R614	*P1	R781	*P4	R928	B1	RB214	*L5	RB928	*C1
C133	*D5	C333	*J4	C531	*F3	C803	*P5	C916	*C2	CL308	K5	CL917	*E1	IC119	E5	IC810	*P2	R106	*C3	R238	*H4	R615	*P1	R782	*P4	R930	*E1	RB215	*L5	RB929	*C1
C134	D5	C334	*J4	C532	*F3	C804	*P5	C917	*E1	CL309	J5	CL918	*C3	IC150	D2	IC811	*P2	R107	*C3	R239	*H4	R616	*P1	R783	*P4	R931	*E1	RB216	*L5	RB930	*B1
C135	D5	C335	*J4	C533	*F3	C805	*P4	C918	*E1	CL310	K5	CL919	*B2	IC151	C2	IC812	*P3	R108	*C3	R240	H4	R617	*P1	R784	*P4	R932	*E1	RB217	*K5	RB931	D5
C136	D5	C336	*J4	C534	*G3	C806	*P4	C919	D5	CL311	K5	CL921	*C3	IC152	C2	IC813	P3	R109	*C3	R241	*K6	R618	N1	R785	*P4	R933	*E1	RB218	*K5	RB932	D5
C137	D5	C337	*J4	C535	*G3	C807	*N4	C920	*C3	CL312	K5	CL922	*B3	IC200	*J5	IC814	*P3	R110	*D4	R242	*H4	R619	N1	R788	N5	R934	*E3	RB219	K5	RB933	*B1
C138	D5	C338	*K4	C536	*G3	C808	*N4	C921	*C2	CL313	K5	CL923	*B3	IC201	*H5	IC815	*P3	R111	C3	R243	*K5	R620	M1	R789	N5	R936	*C2	RB220	J3	RB934	*C1
C139	*E3	C339	*J4	C537	*G3	C809	*N5	C922	*B2	CL314	K5	CL924	*B3	IC206	*H4	IC816	*P3	R112	*C4	R244	K5	R621	M1	R790	N5	R937	C5	RB221	J3	RB935	B3
C140	*D3	C340	*K4	C600	*M1	C810	*N5	C923	*B2	CL315	K5	CL925	*B3	IC207	H4	IC817	*N3	R113	*C4	R245	K5	R622	N1	R791	N5	R938	C5	RB222	J3	RB1000	G5
C141	*D3	C341	*K4	C601	*M1	C811	*P5	C924	*B1	CL316	K5	CL932	*C1	IC208	H4	IC870	P3	R114	*C4	R246	L5	R623	M1	R792	N5	R939	C5	RB223	J3	RB1001	G5
C142	E5	C342	*K4	C602	M1	C812	*P5	C925	*D5	CL317	K5	CL933	*B1	IC209	H5	IC871	*P3	R115	*C4	R247	L5	R624	M1	R793	*N4	R940	*C2	RB224	H3	RB1002	*B4
C150	*D2	C343	*K4	C603	M1	C813	*P5	C926	*C1	CL318	K5	CL936	*C2	IC210	K5	IC880	*P2	R123	D5	R248	L5	R625	M1	R794	*N4	R942	B1	RB225	H3	RB1004	*G5
C151	*D2	C344	*J4	C604	*M1	C814	*P5	C927	*C1	CL319	K5	CL937	*C2	IC211	K5	IC881	*P2	R124	*D5	R249	L5	R626	N3	R796	*M5	R943	B1	RB400	K2	RB1005	*G5
C152	*E2	C345	*J4	C605	*M2	C815	*P4	C1000	A4	CL320	K5	CL939	C4	IC212	L5	IC883	*P2	R125	*D5	R250	*K5	R627	N3	R797	N5	R944	*D5	RB401	K2	RB1006	G5
C153	*D2	C346	*J4	C606	*M2	C816	*P4	C1001	*A5	CL321	K5	CL941	*C2	IC213	L5	IC900	B3	R126	*D5	R251	*K5	R628	M3	R798	N5	R945	*C5	RB402	K3	RB1007	G5
C154	*D2	C347	J3	C607	*N1	C817	*P4	C1002	A4	CL322	K5	CL942	*E1	IC214	K4	IC901	B2	R127	*D5	R252	*K5	R629	M3	R799	*M4	R946	C1	RB403	K2	RB1008	H5
C155	*D2	C348	H3	C608	*N2	C818	*P4	C1003	*A4	CL323	K5	CL943	G4	IC215	*L5	IC902	B2	R128	*D5	R253	*K5	R630	N2	R800	P5	R947	C1	RB404	K2	RB1009	*G5
C156	*E2	C400	K2	C609	*N2	C819	*P4	C1004	*A5	CL324	K5	CL944	*C3	IC216	H5	IC903	B1	R129	*D5	R254	*K5	R631	N2	R801	P5	R948	C2	RB405	J3	RB1010	*G5
C157	*D2	C401	K1	C610	*M2	C820	*N4	C1005	*A4	CL325	K5	CL945	*C3	IC217	H3	IC905	*C1	R130	*D5	R255	*K5	R632	N3	R802	P5	R949	E5	RB406	J3		
C158	*D2	C402	K2	C611	*N2	C821	*N4	C1006	*B3	CL326	K5	CL1000	*B2	IC218	H4	IC906	*D1	R131	*D5	R256	*K5	R633	N3	R803	P4	R950	E5	RB407	J3	RV800	P2
C159	*E2	C403	K2	C612	*M1	C822	*N5	C1007	*B5	CL327	K5	CL1002	D4	IC219	H4	IC907	*B1	R132	*D5	R257	*K5	R634	N3	R804	P4	R951	D5	RB408	K3	RV801	P2
C160	*E2	C404	*K3	C613	*N1	C823	N5	C1008	*B5	CL328	K5	CL1003	D4	IC220	*H2	IC908	D1	R133	*D5	R258	*K5	R635	N3	R805	P4	R952	*C2	RB409	K3		
C161	*E2	C405	*J3	C614	*M2	C824	*N4	C1009	*C5	CL329	K5	CL1005	G4	IC221	*G2	IC909	*C2	R134	*D5	R259	*K5	R636	N3	R806	P4	R953	*C1	RB410	K1	S50	G1
C162	*E2	C406	*J2	C615	N1	C825	*N4	C1010	*B5	CL330	K5	CL1006	G4	IC222	*G2	IC910	*D1	R135	*D5	R260	L5	R700	N5	R807	P4	R954	*C1	RB411	K2	S900	C1
C163	*E2	C407	*H3	C616	N2	C826	*N4	C1011	*A4	CL331	J4			IC223	H1	IC911	*E1	R140	C3	R261	L5	R701	N5	R808	P4	R1000	B2	RB412	K1		
C164	*D2	C408	H1	C617	*M1	C827	*N4	C1012	*C5	CL332	J4	CN2	B4	IC224	*J5	IC912	*E1	R143	*D4	R262	L5	R702	*N5	R809	P4	R1003	*A2	RB413	K1	TP100	G1
C165	*D2	C409	J1	C618	*M2	C828	*N4	C1013	B4	CL333	J4	CN3	E4	IC300	K3	IC913	E5	R144	C5	R263	L5	R703	*N5	R810	P4	R1004	*A2	RB414	K1	TP101	F1
C166	*E2	C410	J1	C619	*M2	C829	N5	C1014	*A4	CL334	J4	CN4	G4	IC301	L3	IC914	*D5	R145	C5	R265	*J4	R704	*N5	R811	*P4	R1005	*B2	RB415	K1	TP102	G1
C167	*D2	C411	K1	C620	*N2	C830	N5	C1015	*A1	CL335	J4	CN22	M5	IC302	L4	IC915	*C5	R146	*D5	R266	*J4	R705	*P5	R812	*P3	R1006	*B2	RB416	*H2	TP200	K5
C168	*E2	C412	J1	C621	*N2	C831	N5	C1016	C5	CL336	J4	CN23	H5	IC303	L4	IC916	*B1	R147	*D5	R268	*K5	R706	*P5	R813	*N3	R1009	B3	RB417	*H2	TP201	H3
C169	C2	C413	H2	C622	*N1	C832	N5	C1017	A2	CL400	J1	CN24	C5	IC304	L5	IC917	C5	R150	E2	R269	*K5	R707	*P5	R814	P3	R1011	*B3	RB418	*H2	TP400	K2
C170	C3	C414	*H2	C623	*M2	C833	*P3	C1019	A2	CL401	K1	CN900	D1	IC305	*J5	IC918	C5	R151	E2	R270	*K5	R708	*P5	R815	P3	R1016	B2	RB419	*H1	TP401	K2
C171	C1	C415	J1	C624	*M2	C834	*N3	C1021	B3	CL601	N3			IC400	H2	IC919	D5	R152	E2	R271	*K5	R709	*N5	R816	*P3	R1021	B3	RB420	*H1	TP600	P1
C172	C3	C416	J1	C625	*M1	C835	*P4	C1022	B3	CL701	P5	D700	*N5	IC401	J2	IC1000	B5	R153	E2	R272	*J4	R710	*N4	R818	*P4	R1022	*B3	RB500	F3	TP601	N1
C173	*C2	C417	J1	C626	*M1	C836	*P4	C1025	*B2	CL702	P5	D1000	A2	IC402	*L1	IC1001	A5	R154	E2	R273	*J4	R711	*N5	R819	*P4	R1023	*B3	RB501	F2	TP602	N3
C174	C2	C418	H1	C627	*M2	C837	*P3	C1026	*A2	CL703	P5	D1001	*A3	IC403	L1	IC1002	C5	R155	E2	R274	*L5	R712	*N5	R820	*P3	R1026	*A3	RB502	F2	TP603	N3
C175	C1	C419	*H2	C628	L2	C838	*N3	C1029	*B2	CL704	P5	D1002	*A3	IC404	*L1	IC1004	*A3	R156	E2	R278	*H4	R713	*P5	R822	P3	R1027	*A3	RB503	F2	TP604	N3
C176	C2	C420	*H2	C629	*L2	C839	*P3	C1031	*A3	CL705	P4	D1003	A3	IC405	*L2	IC1005	*E5	R157	E2	R279	*H4	R714	*N5	R823	P3	R1028	B3	RB504	F2	TP700	P5
C200	J5	C421	*J3	C630	*L2	C840	*P3	C1032	*A3	CL706	N5			IC406	*K2	IC1006	*G5	R158	E2	R280	H4	R715	*P5	R824	*P3	R1030	B4	RB505	F2	TP701	M1
C201	H5	C422	*J3	C631	*L2	C841	*P3	C1033	B2	CL707	P4	E100	*H3	IC407	*J2	IC1007	*G5	R159	E2	R281	*H4	R716	*P5	R826	P3	R1032	H4	RB506	*G4	TP702	P4
C204	J5	C423	*J3	C632	L2	C842	*N3	C1034	B2	CL708	N4	E200	H5	IC409	*J2	IC1008	*G5	R160	E1	R282	*H4	R717	*P5	R827	P3			RB507	*G4	TP704	L1
C206	*H4	C424	K2	C633	K2	C843	P3	C1035	*A3	CL709	N4	E300	K3	IC410	*J2	IC1010	*C5	R161	E1	R283	*K5	R718	*P5	R828	P2	RB50	*G5	RB508	*G4		
C207	*H4	C425	K2	C634	N3	C844	P3	C1037	*B3	CL710	N5	E400	K1	IC411	*J1			R162	E1	R284	K5	R719	*P5	R832	P2	RB51	*F5	RB509	*G4	X801	P3
C208	*H4	C426	K2	C635	N3	C845	P3	C1038	B3	CL711	N5	E500	*G1	IC412	*L1	L700	*N5	R163	E1	R285	H4	R720	*P5	R835	*P3	RB52	*G5	RB510	*F4	X802	P3
C209	*H4	C427	*L1	C636	M3	C846	*P3	C1039	B3	CL712	N5	E600	*N3	IC413	*K1	L1000	B4	R164	E1	R300	*J5	R721	*N5	R836	*P3	RB53	*G5	RB511	*F4	X803	P3
C210	*H4	C428	L1	C637	*N3	C847	*P3	C1060	*G5	CL713	P5	E700	P5	IC414	*J1	L1001	A4	R165	E1	R301	*J5	R722	*N4	R837	*P3	RB100	*C3	RB600	M3	X804	P3
C211	*H4	C429	L1	C638	N3	C848	P3	C1061	B4	CL714	P5	E900	*D3	IC415	L1	L1002	A5	R166	E1	R302	J5	R723	*P4	R838	*P2	RB101	*C3	RB601	N3	X805	N3
C212	H3	C430	*L1	C639	M3	C849	*P3	C1062	*G5	CL715	N4			IC416	L1	L1003	A5	R167	E1	R303	J5	R724	*P5	R839	P2	RB102	*C3	RB602	M3	X870	P3
C213	H4	C431	K2	C700	N5	C850	*P3	C1063	*G5	CL716	N4	F1000	B5	IC417	*H1	L1004	A2	R168	F1	R304	J5	R725	*N5	R840	*P2	RB103	*C3	RB603	M3		
C214	H4	C432	*K2	C701	*N5	C851	*P3	C1064	A3	CL717	N4	F1001	B5	IC418	H2	L1005	A2	R169	F1	R305	J5	R726	*N5	R841	*N3	RB104	*B3	RB604	P2	*:B SIDE	
C215	K5	C433	*J2	C702	*N5	C852	*P3	C1065	A3	CL718	N4			IC419	H2	L1006	A3	R170	E1	R306	J5	R727	*N5	R870	P3	RB105	*B3	RB605	N2		
C216	K5	C434	K1	C703	*N5	C853	*P2	C1066	A4	CL721	N5	FB100	*D5	IC420	H2	L1007	B4	R171	F1	R400	H2	R728	*M4	R871	*P4	RB106	*C3	RB606	N3		
C217	K5	C435	*H2	C704	*P5	C854	*P2	C1067	*D5	CL724	N5	FB200	*H4	IC500	G2			R172	F1	R401	H2	R729	*M4	R872	P3	RB107	*C3	RB607	N3		
C218	*K5	C436	*H1	C705	*N5	C855	*P3			CL729	N4	FB201	K5	IC501	G3	Q100	*D5	R173	F1	R402	K2	R730	*P4	R873	P3	RB108	*C3	RB608	M3		
C219	*K5	C437	*H1	C706	*N5	C856	N3	CL51	*F4	CL730	N4	FB700	*P4	IC600	M2	Q101	*D5	R174	F1	R403	K2	R731	*P4	R874	*P3	RB109	*C3	RB609	M3		
C220	*K5	C438	L1	C707	*N5	C857	*P3	CL52	*F4	CL731	N5	FB800	N5	IC601	L2	Q200	*H4	R175	F1	R404	J1	R732	*P4	R875	*P3	RB110	*C3	RB610	M3		
C221	K5	C439	L1	C708	*N5	C858	N3	CL56	J5	CL732	P5	FB801	N5	IC602	N3	Q201	*H4	R176	E2	R405	J1	R733	P4	R880	*P2	RB111	*B3	RB611	M3		
C222	L5	C440	L2	C709	*N5	C859	*P2	CL57	J5	CL733	P5	FB802	*P4	IC603	M3	Q202	K5	R177	E2	R406	J1	R734	P5	R881	*P2	RB112	*B3	RB700	*M4		
C223	L5	C441	L2	C710	*N5	C860	*P3	CL58	*F4	CL734	P5	FB803	*N4	IC604	M3	Q203	*K5	R178	*E3	R407	J1	R735	P5	R882	*P2	RB113	*C3	RB701	*M4		
C224	L5	C442	*K1	C711	*N5	C861	*P2	CL59	*F4	CL735	P5	FB804	*N4	IC605	*N3	Q700	*N5	R200	*K5	R408	J1	R736	N4	R883	*P2	RB114	*C4	RB702	M5		
C300	K3	C443	*J1	C712	*P5	C862	*P2	CL60	*F4	CL736	P5	FB805	*N3	IC606	*N3	Q701	*N5	R201	*K5	R409	J1	R737	*N4	R884	*P2	RB115	*C4	RB703	M5		
C301	*L3	C444	*H1	C713	*P5	C863	*N2	CL61	*F4	CL737	P5	FB806	*P3	IC607	*M3	Q702	*N5	R202	J5	R411	L2	R738	N4	R885	*P2	RB116	*C4	RB704	M5		
C302	*L4	C500	*F2	C714	*P5	C864	*P3	CL62	*F4	CL738	N4	FB807	*P3	IC608	*M3	Q1000	*A2	R203	J5	R412	*H1	R739	N4	R886	*P2	RB117	*C4	RB705	M5		
C303	*M3	C501	*F2	C715	*N5	C865	*N3	CL63	*F4	CL739	N4	FB808	*P2	IC700	*N5	Q1001	*B2	R204	*K5	R413	*H1	R740	M4	R887	*P2	RB118	*B4	RB706	M4		
C304	*M4	C502	*F2	C716	*N5	C866	P2	CL64	*F4	CL740	N5	FB809	*P2	IC701	*N5	Q1002	*B3	R205	*K5	R414	L2	R741	M4	R888	*N2	RB119	*B4	RB707	M4		
C305	*M3	C503	*F2	C717	*N4	C867	P3	CL65	*F4	CL741	N5	FB870	*P3	IC702	*N4	Q1003	*A3	R206	K5	R415	L2	R742	M4	R889	*P2	RB120	*C4	RB708	M4		
C306	*M3	C504	*G2	C718	*P4	C870	*P4	CL66	*F4	CL800	P5			IC703	*P5			R207	J5	R416	L2	R743	M4	R900	B1	RB121	*C4	RB709	M4		
C307	*L3	C505	*G2	C719	*P5	C871	*P3	CL67	*F4	CL801	N5	IC50	*F4	IC704	*P5	R50	F4	R208	*H5	R417	L1	R744	P5	R901	B1	RB122	*C4	RB710	F5		

HIF-1
SUFFIX: -21

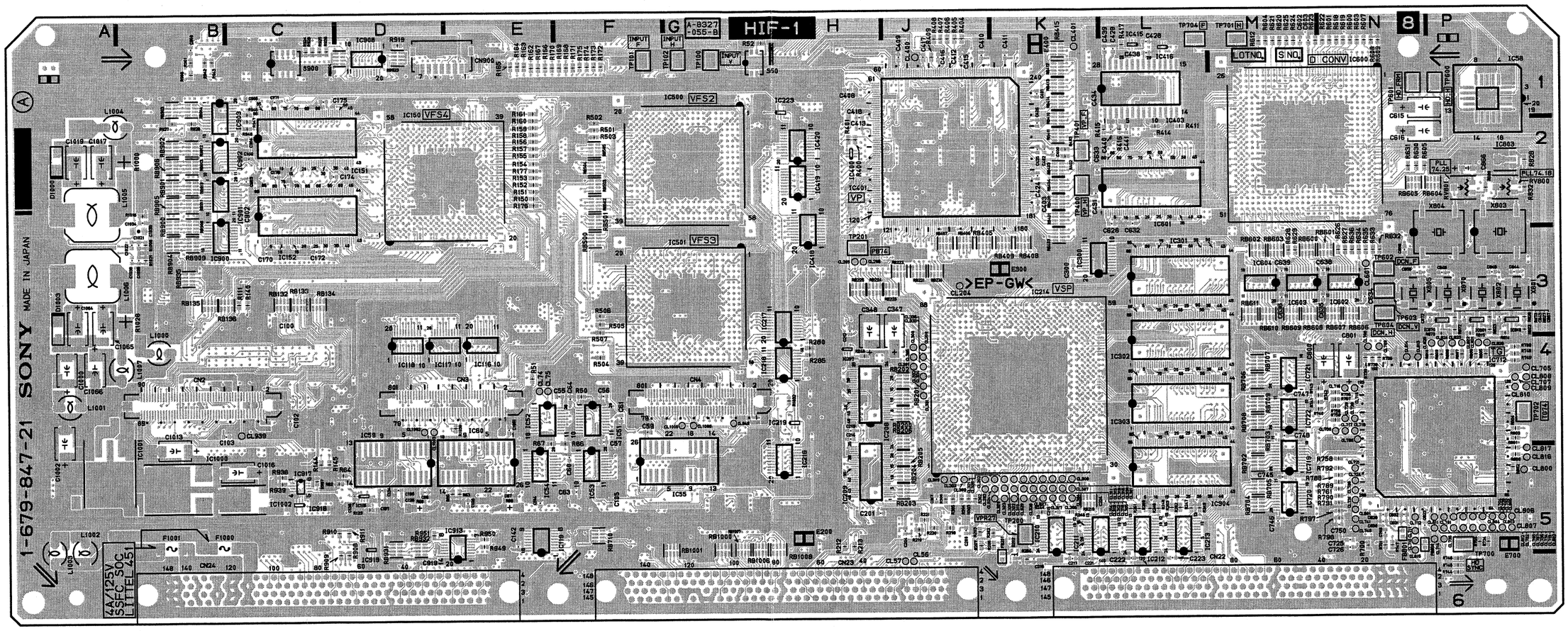

HIF-1
SUFFIX: -21

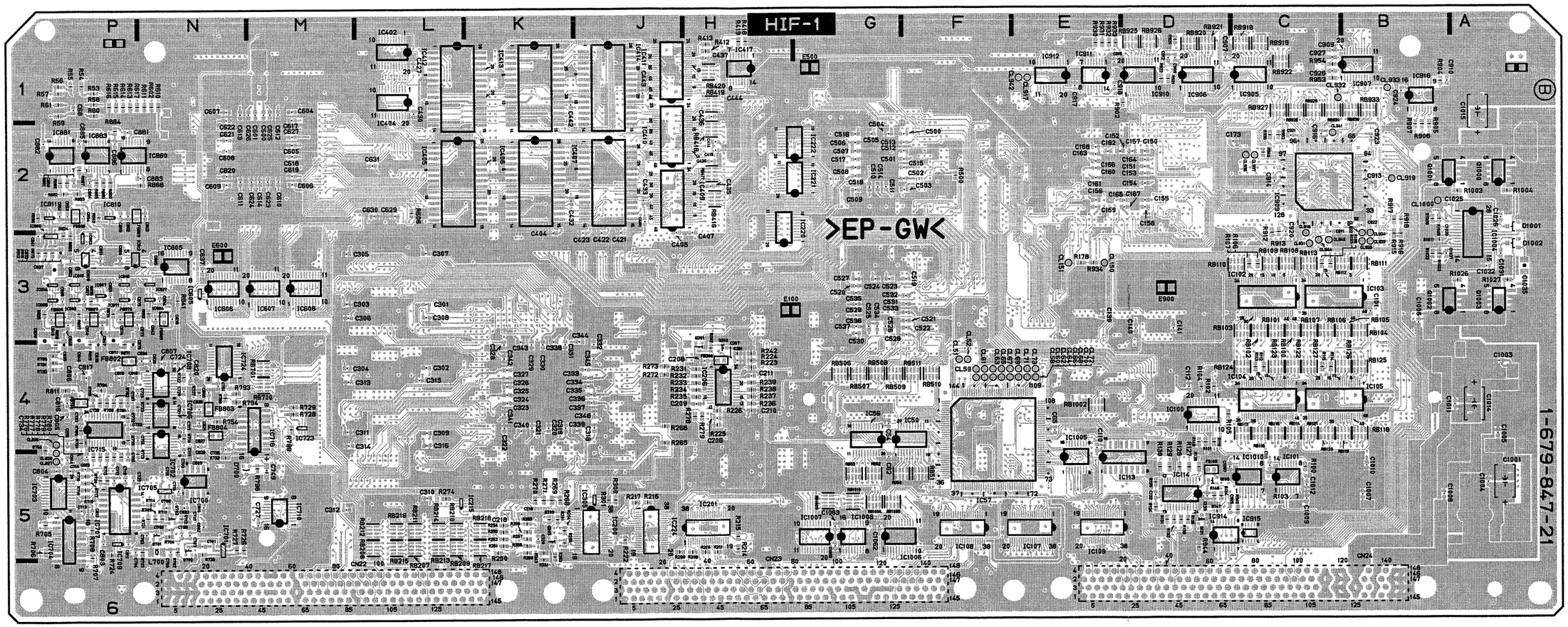

HIF-1 -B SIDE-
SUFFIX: -21

4-49 (a)

HPR-1 (1-679-754-15)

C100	*C1	C244	K1	C513	*N4	C685	L3	C811	*D4	C1029	*A5	C1266	*L2	CL1214	M2	CL5158	H4	FB1000	*E5	IC918	B3	R208	*J3	R571	M4	R933	*C5	R1052	E3	RB700	G1	X301	P4
C101	*C2	C245	*K3	C514	*N1	C686	*L3	C812	*C3	C1030	B3	C1267	*L2	CL1215	M2	CL5159	H4	FB1001	*K3	IC919	*C5	R209	*J3	R572	M4	R934	*C5	R1053	E3	RB701	G1	X302	P4
C102	*C2	C246	J1	C515	M1	C687	L3	C813	*D3	C1031	A3	C1268	M1	CL1216	M2	CL5160	H4	FB1002	E2	IC922	C4	R210	*J3	R573	*M4	R935	*C5	R1054	E3	RB702	H1	X303	P4
C103	E1	C285	L1	C516	*P1	C688	L3	C814	*D3	C1033	*B2	C1269	M1	CL1217	M2	CL5161	H4			IC923	*H3	R212	L1	R600	J5	R936	*C5	R1055	E3	RB703	G1		
C104	C1	C286	L1	C517	*M4	C689	L3	C815	*C3	C1034	*A2	C1270	*L1	CL1218	M2	CL5162	H4	IC100	C1	IC1000	K5	R213	L1	R601	J5	R938	C4	R1056	F3	RB704	E3	*:B SIDE	
C106	*C1	C287	L1	C518	N5	C690	L3	C816	*D3	C1035	*B4	C1272	L1	CL1219	M2	CL5170	J5	IC101	C2	IC1001	J5	R216	K4	R602	J5	R943	*A5	R1057	F2	RB705	E3		
C107	*C1	C288	L1	C570	*M4	C691	L3	C817	*C3	C1036	*A4	C1273	L1	CL1220	M2	CL5224	H3	IC102	C2	IC1002	L5	R217	K4	R603	J5	R944	*A5	R1058	F2	RB706	E4		
C108	*C2	C289	L1	C571	*M4	C692	*J4	C818	*D4	C1037	B1	C1274	L1	CL1221	M2	CL6011	L5	IC103	*E1	IC1003	E5	R218	K4	R604	J5	R951	*B3	R1059	E2	RB707	E4		
C109	*C2	C290	L1	C572	M4	C693	*J4	C819	*C4	C1038	*B2	C1275	K1	CL1222	M2	CL6018	M4	IC104	*D1	IC1004	K3	R219	K4	R605	J3	R952	*B3	R1060	E2	RB708	*G2		
C110	*D2	C291	M1	C573	N5	C694	*J4	C820	*D3	C1039	*B2	C1276	L1	CL1223	M2	CL6041	M4	IC107	C1	IC1005	J5	R221	J3	R606	*H4	R953	*A4	R1061	A1	RB709	*F2		
C112	*D1	C292	*K3	C600	*H4	C695	*J4	C821	*D3	C1040	*B2	C1277	L1	CL1224	L3	CL6053	L3	IC108	C1	IC1006	K5	R222	H1	R607	*H4	R954	*B4	R1062	*B2	RB710	*G2		
C113	*D1	C293	*K1	C601	J3	C696	*J4	C822	*D3	C1041	A3	C1600	*J4	CL1228	D1	CL6054	L3	IC109	C2	IC1008	A5	R223	H2	R608	*H4	R955	*B4	R1063	*B2	RB711	*G2		
C114	*D1	C294	N1	C602	J3	C697	*J4	C823	*D3	C1042	*B1	C1601	*J4	CL1234	D2	CL6070	K3	IC110	C2	IC1009	*B2	R224	*L3	R609	J3	R956	*B3	R1064	*B2	RB712	*H2		
C115	*D1	C295	*J2	C603	*J3	C698	*J4	C824	*D3	C1043	*A4	C1603	*K4	CL1293	D1	CL6071	K4	IC111	*D3	IC1010	B3	R229	*L3	R612	J5	R960	B4	R1065	*B2	RB713	*G2		
C116	*D1	C296	*J1	C604	*J3	C699	*J4	C829	D5	C1044	*A5	C1604	*L4	CL1299	C2	CL6072	K4	IC113	E1	IC1013	G5	R230	*L3	R613	H3	R961	B4	R1066	*B2	RB714	*H2		
C117	*E1	C297	*J2	C605	*H4	C700	G5	C832	C5	C1046	*B2	C1605	*L4	CL2011	J3	CL6073	K4	IC114	E2	IC1014	F5	R233	*L3	R614	H3	R962	B4	R1069	B2	RB715	*H2		
C118	*D1	C298	*J1	C606	*J4	C701	*G5	C835	H5	C1047	*B2	C1606	*L4	CL2018	K3	CL6074	K4	IC115	D1	IC1015	K5	R250	*L3	R615	L3	R963	B4	R1071	*B2	RB850	D4		
C119	*D1	C299	*H2	C607	*J4	C702	*G5	C836	G5	C1048	B2	C1607	*L5	CL2026	K2	CL6075	K4	IC116	D3	IC1016	*C4	R251	*J2	R616	*K4	R964	B4	R1072	*B2	RB851	D4		
C120	*D1	C300	P4	C608	*J4	C703	*G5	C837	H5	C1049	B2	C1608	*L5	CL2027	K2	CL6076	K4	IC200	J2			R252	K1	R617	*K4	R965	B4	R1073	*B2	RB852	D4		
C121	*D1	C303	*N4	C609	*J4	C704	*H5	C851	*D4	C1050	*B2	C1609	*L5	CL2034	K2	CL6077	K4	IC201	*K1	L1000	A2	R253	K1	R618	*K4	R968	*A5	R1074	*B3	RB853	D4		
C122	*E1	C304	*N4	C610	*J4	C705	*H4	C852	*D3	C1051	*B2	C1610	*L5	CL2035	K2	CL6078	K4	IC203	*K3	L1001	B2	R256	J3	R619	*L3	R969	*A5	R1075	*B2	RB854	D4		
C123	*D1	C306	N4	C611	*J4	C706	*H4	C853	*D3	C1052	*B2	C1611	*L4	CL2036	K2	CL6079	K4	IC204	L2	L1003	A2	R257	L3	R620	*K5	R970	*A5	R1076	A3	RB855	C4		
C124	*D1	C307	P4	C612	*J4	C707	*H4	C854	*D3	C1053	A2	C1612	L3	CL2037	K2	CL6080	K4	IC205	*L1	L1005	A4	R258	J1	R621	*K5	R971	*A5	R1080	K3	RB900	*B5		
C125	*D1	C308	P4	C613	*J4	C708	*H4	C855	*D3	C1054	A3	C1613	*L4	CL2038	K2	CL6095	*L4	IC207	*M2	L1006	B4	R259	*L1	R622	*K5	R972	*A5	R1081	E2	RB901	*B5		
C126	*D1	C309	*P4	C614	*H4	C709	H3	C856	*D3	C1055	A3	C1614	*L4	CL2039	K2	CL6111	M4	IC208	*K2	L1007	A4	R300	*N4	R623	*K5	R973	*A5	R1082	B2	RB902	*C5		
C127	*D1	C310	*P4	C615	*J4	C710	G3	C857	*D3	C1056	B2	C1615	L3	CL2040	K2	CL6126	M4	IC209	*K2	L1008	A3	R301	N4	R624	*K5	R974	*A5	R1089	*B5	RB903	*C5		
C128	*D2	C311	*P5	C616	*J4	C711	G3	C858	*D4	C1059	G5	C1616	L3	CL2041	K1	CL6137	L3	IC210	*N2	L1009	A3	R302	*N4	R627	*K5	R975	*A5	R1090	*K3	RB904	*B5		
C129	*D2	C312	*P5	C617	*J4	C712	*G4	C859	*D3	C1060	F5	C1617	*K4	CL2053	J1	CL6151	K3	IC211	K4			R303	*P4	R628	L3	R976	*A5	R1091	E2	RB905	*C5		
C130	*D2	C315	*N4	C618	*J4	C713	*F4	C861	D5	C1061	*K5	C1618	*K4	CL2054	J1	CL6152	K4	IC302	P4	Q300	*P4	R304	P4	R629	L3	R977	*A5	R1092	*D5	RB906	*C5		
C131	*D2	C316	*N4	C619	*H3	C714	*F4	C870	E3	C1200	*K2	C1619	*L5	CL2095	J3	CL6153	K4	IC304	N5	Q301	*P4	R305	P4	R638	J5	R978	*A5	R1093	*K3	RB907	*C5		
C132	*D1	C317	*N4	C620	*H4	C715	*F4	C871	*D4	C1201	*K2	C1620	*J5	CL2111	K2	CL6154	K4	IC305	N4	Q302	*P4	R306	P4	R639	*K5	R979	*C4	R1094	E2	RB908	B5		
C133	*D1	C318	*N4	C621	*H4	C716	*F4	C872	D3	C1202	*J2	C1621	*J4	CL2119	K2	CL6155	K4	IC306	*P4	Q303	*P4	R307	P4	R640	*J3	R980	*D5	R1095	*B3	RB909	B5		
C140	*E1	C319	*P3	C622	*H4	C717	*F4	C873	*D4	C1203	*J2	C1622	H3	CL2120	K2	CL6156	K4	IC421	F1	Q570	M4	R308	P4	R641	*J3	R981	*D5	R1200	*L3	RB910	B5		
C141	*E2	C320	*P4	C623	*H4	C718	*F4	C874	*D3	C1204	*J2	C1623	H3	CL2121	K2	CL6157	K4	IC500	L5	Q571	M4	R309	P4	R642	L3	R982	*D5	R1201	*L3	RB911	C5		
C151	*D1	C321	P4	C624	*H4	C719	*F4	C875	*D3	C1205	*J2	C1624	*H4	CL2122	K2	CL6158	K4	IC501	L5	Q1000	*A2	R333	*P4	R643	L3	R983	*D5	R1202	L1	RB912	C5		
C152	*D2	C322	N4	C625	*H4	C720	G3	C900	B4	C1207	*K2	C1625	*J5	CL2123	K2	CL6159	K4	IC502	M5	Q1001	*A2	R334	*P4	R644	J5	R984	*D5	R1203	*M1	RB913	C5		
C153	*D2	C323	*N3	C626	*J4	C721	G3	C901	B4	C1208	*K2	C1626	*J4	CL2124	K2	CL6160	K4	IC503	M5	Q1002	*A2	R335	P4	R645	*L4	R985	*D5	R1204	M1	RB914	C5		
C154	*D2	C324	N4	C627	J3	C722	G3	C902	*D5	C1209	*L2	C1627	*J5	CL2125	K1	CL6161	K4	IC506	N2	Q1003	*A2	R351	N4	R646	*J4	R986	*D5	R1205	*L2	RB915	*B4		
C155	*D2	C325	*N4	C628	*J4	C723	*H4	C903	*C5	C1210	*L2	C1628	*K4	CL2126	K1	CL6162	K4	IC507	P2	Q1004	*D5	R352	P4	R647	*L3	R987	*B3	R1206	*M2	RB916	*B4		
C156	*D2	C326	*N4	C629	*J4	C724	*H4	C904	*B4	C1211	*L2	C1629	*L4	CL2137	J1	CL6170	K5	IC508	L5	Q1005	*K3	R353	N4	R700	G5	R989	*C3	R1207	*M1	RB917	*B4		
C157	*D2	C327	*P4	C630	*J4	C725	*H4	C905	*C5	C1212	*L2	C1630	L3	CL2168	H2	CL6224	K3	IC509	L5	Q1006	E2	R357	*P5	R701	G5	R990	*C3			RB918	*B4		
C158	*D2	C328	*P4	C631	*J4	C726	*G5	C906	*B5	C1213	*L2	C1631	L3	CL2170	H2	CL7128	G3	IC510	N5	Q1007	*D5	R358	*P5	R702	H4	R991	*C3	RB100	E1	RB919	*C4		
C159	*D2	C329	P4	C632	*J3	C727	*G5	C907	*B5	C1214	*L2			CL2197	K2	CL7129	G3	IC511	*M5			R359	P4	R703	*G4	R992	*A5	RB101	E1	RB920	*C4		
C161	*D3	C330	*N3	C634	J3	C728	*G5	C908	*C5	C1215	*L2	CL100	C2	CL2199	K2	CL7132	G3	IC512	M3	R100	B1	R360	P4	R704	F4	R993	*A5	RB102	E2	RB921	*A5		
C162	*E2	C331	*N4	C635	J3	C729	G3	C909	B4	C1216	*L2	CL419	F1	CL2200	K2	CL7133	G3	IC513	N4	R101	B1	R361	P4	R707	E4	R994	B5	RB103	E2	RB922	*A5		
C163	*D2	C332	*N4	C636	J3	C730	G3	C910	*A5	C1217	*L2	CL600	M2	CL2201	K2	CL7134	G3	IC514	M5	R102	B1	R362	*P4	R710	E4	R995	B5	RB104	*E1	RB923	*A4		
C164	*D2	C333	*P3	C637	J3	C731	H3	C911	*A4	C1218	*L2	CL601	M2	CL3018	L3	CL7135	G3	IC515	*N5	R103	B1	R500	*M5	R711	*G3	R996	B4	RB105	*E1	RB924	*C4		
C165	*D2	C334	P4	C638	J3	C732	H3	C912	*B4	C1219	*L2	CL602	M2	CL3053	L1	CL7136	G3	IC516	N2	R104	B2	R501	*M5	R712	*G3	R997	*A5	RB106	*D1	RB925	C5		
C166	*E2	C335	*P4	C639	J3	C733	G3	C913	*A4	C1221	*K4	CL603	M2	CL3054	L1	CL7185	F4	IC517	N4	R105	B2	R502	*L5	R713	*G3	R999	C5	RB200	*K2	RB928	A4		
C167	*E1	C336	N4	C640	J3	C734	H3	C914	*A4	C1222	*H2	CL604	M2	CL3095	L3	CL7187	F4	IC518	*N5	R106	B2	R503	*L5	R714	*G3	R1000	*K5	RB201	*K2	RB929	A4		
C200	*J2	C337	*N3	C641	J3	C735	*G4	C915	*A5	C1223	*K2	CL605	M2	CL3137	L1	CL8001	*C4	IC600	J4	R107	B2	R504	*L5	R715	*G3	R1001	*K5	RB207	*K3	RB930	A4		
C201	*J2	C338	*N3	C642	J3	C736	*G4	C918	*C5	C1224	H1	CL606	M2	CL3170	K3	CL8003	C4	IC601	*J3	R108	B2	R505	*L5	R716	*G3	R1002	*L5	RB208	*K3	RB931	*A4		
C202	*K2	C339	P4	C643	J3	C737	*G4	C919	*B4	C1225	H1	CL607	M2	CL4017	N4	CL8004	C4	IC602	*L3	R109	B2	R506	*L5	R717	*G3	R1003	*K5	RB217	*M2	RB932	*E2		
C203	*J2	C340	*N4	C644	J3	C738	*H4	C921	*B5	C1226	*H2	CL608	M2	CL4021	N4	CL8041	D3	IC603	L4	R110	B2	R507	*L5	R718	*G3	R1004	K5	RB218	*M1	RB933	*E1		
C204	*J2	C341	*P4	C645	J3	C739	*G4	C923	*D5	C1227	*H2	CL609	M2	CL4022	N4	CL8042	D3	IC700	G4	R111	B2	R508	*M5	R719	*G3	R1005	K5	RB301	*N5	RB1000	*L5		
C205	*J2	C342	P4	C646	*H4	C740	*G4	C924	*B3	C1228	*J3	CL610	M2	CL4027	P4	CL8053	D3	IC707	*G4	R112	B1	R509	*M5	R720	*G3	R1006	K5	RB302	*N5	RB1001	*J5		
C206	*J2	C343	*N3	C647	*L4	C741	*G4	C925	*C5	C1229	*K2	CL611	M3	CL4029	P4	CL8058	D3	IC709	E3	R113	B1	R510	*M5	R721	*G3	R1007	*L5	RB304	N5	RB1002	*L5		
C207	*J2	C344	*N3	C648	*L4	C742	*G4	C926	*C4	C1230	K1	CL612	M3	CL4035	P4	CL8070	C3	IC711	G2	R114	B1	R511	*M5	R722	*G3	R1008	*L5	RB305	N5	RB1003	*J5		
C208	*J2	C345	*N3	C649	*M4	C743	*G4	C929	*A5	C1232	*L2	CL613	M3	CL4038	*P4	CL8076	C3	IC712	H2	R115	B1	R512	*M5	R723	*G4	R1009	*L5	RB500	*N2	RB1004	*G5		
C209	*J2	C346	*N3	C650	*L4	C744	*G4	C930	*A5	C1233	*L2	CL614	M3	CL4083	P4	CL8078	C3	IC713	*G3	R116	B2	R513	*M5	R858	*C3	R1010	*L5	RB501	*N2	RB1005	*G5		
C210	*J2	C347	*P4	C651	*L3	C745	*G4	C931	*B5	C1234	*L2	CL615	M3	CL4085	P4	CL8082	C3	IC714	*G3	R117	B2	R514	*L5	R859	*C3	R1011	*L5	RB502	N3	RB1006	*F5		
C211	*J2	C348	P4	C652	*L3	C746	*G4	C932	*B5	C1235	*L2	CL616	M3	CL4102	K1	CL8091	D4	IC715	*H3	R118	B2	R515	*L5	R860	*C3	R1012	*L5	RB503	M3	RB1007	*G5		
C212	*J2	C351	N4	C653	*L4	C747	*E3	C933	H3	C1236	*L1	CL617	M3	CL4105	P3	CL8162	C3	IC716	*H3	R119	B2	R516	*L5	R861	*C3	R1013	*L5	RB504	*N5	RB1008	*F5		
C213	*J3	C353	N4	C654	L3	C748	*E4	C934	*C4	C1237	*L1	CL618	M3	CL4149	P3	CL8228	C3	IC717	*G3	R120	B2	R517	*L5	R862	*C4	R1014	*L5	RB505	*N5	RB1009	*K5		
C214	*K2	C356	*N4	C655	*L4	C749	H5	C1000	*K5	C1238	*K2	CL619	M3	CL4150	P3	CL8234	C3	IC718	*G2	R121	B2	R518	*L5	R900	B4	R1015	E5	RB506	*M5	RB1200	*M2		
C215	*J2	C358	P5	C656	*K4	C751	G2	C1001	J5	C1239	*K2	CL620	M3	CL5011	J5	CL8293	C3	IC719	*G2	R122	B2	R519	*L5	R901	*C5	R1016	K3	RB507	*M5	RB1201	*M2		
C216	*J2	C359	P5	C657	*L4	C752	G2	C1002	*L5	C1240	*K2	CL621	M3	CL5018	J5	CL8299	C3	IC720	*H2	R123	B2	R520	*M5	R902	*B1	R1017	*E5	RB508	M4				
C217	*J1	C360	*N3	C658	L3	C753	*G2	C1003	*E5	C1241	*K2	CL622	M3	CL5041	K3			IC721	*H2	R124	*C3	R521	*M5	R903	*C1	R1018	K3	RB509	N4	S900	A1		
C218	*H2	C361	*N4	C659	*L4	C754	H2	C1004	K3	C1242	*L2	CL623	M5	CL5053	J3	CN19	M6	IC722	B4	R125	*C2	R522	*M5	R904	B4	R1019	*E5	RB510	*N2				
C219	*H2	C362	*N4	C660	*L4	C755	H2	C1005	*E5	C1243	*L2	CL624	M5	CL5054	J3	CN20	H6	IC723	B4	R126	*D2	R523	*M5	R905	*C1	R1020	K3	RB511	*N2	TP100	C1		
C220	*H2	C363	N5	C661	*M4	C756	*E4	C1006	K3	C1244	*L2	CL1001	*D2	CL5070	H3	CN21	C6	IC802	D3	R127	*D2	R524	M5	R906	A5	R1021	E5	RB512	*M2	TP101	D2		
C221	*H2	C368	N3	C662	*K4	C757	H3	C1007	*E5	C1245	*L2	CL1053	D1	CL5071	H3	CN500	M3	IC803	*D4	R128	*D2	R525	M5	R907	*H3	R1022	E5	RB513	*N2	TP102	D2		
C222	*J2	C400	*F1	C663	*L4	C758	H2	C1008	*K3	C1246	*L2	CL1058	D1	CL5072	H4	CN800	F4	IC805	*C4	R129	*C1	R526	M4	R908	*H3	R1023	E5	RB514	*N3	TP103	E1		
C223	*J2	C401	*F2	C664	*M4	C759	G2	C1009	*E5	C1247	*L2	CL1075	C1	CL5073	H4	CN900	C1	IC808	*H5	R130	*D2	R527	M3	R909	*H3	R1024	E5	RB515	*M3	TP104	E1		
C224	*J2	C402	*F1	C665	*K4	C760	G2	C1010	*K3	C1248	*L2	CL1076	D1	CL5074	H4			IC809	*G5	R137	*E1	R528	M2	R910	*H3	R1025	E5	RB516	*M3	TP200	K3		
C225	*J2	C403	F1	C666	*K4	C761	F2	C1011	*E5	C1249	*L2	CL1082	C2	CL5075	H4	D1000	A2	IC810	*H5	R138	*C3	R529	N1	R911	*H3	R1026	E5	RB517	*M3	TP201	J3		
C226	*J2	C404	*F2	C667	*K4	C762	H2	C1012	*K3	C1250	*K2	CL1087	C2	CL5076	H4	D1001	B2	IC811	*D4	R139	*C2	R530	N1	R912	*H3	R1027	E5	RB518	N5	TP202	K2		
C227	*K2	C405	*F2	C668	*K4	C763	*G2	C1013	*E5	C1251	*L2	CL1162	D2	CL5077	H4	D1002	B2	IC900	B5	R164	*D1	R550	M2	R913	*H3	R1028	K3	RB519	N5	TP204	L3		
C228	*J2	C406	*F1	C669	*K4	C764	*H2	C1014	*K3	C1252	*L1	CL1200	K3	CL5078	H4	D1003	A2	IC901	B5	R165	*D1	R551	*M2	R914	*A5	R1029	K3	RB520	*M2	TP206	K1		
C229	*K2	C407	*F2	C670	*K4	C765	*H4	C1015	*J5	C1253	*L1	CL1201	L3	CL5079	H4			IC902	C5	R166	*D1	R552	M3	R915	*H3	R1030	K3	RB521	M5	TP301	P4		
C230	*K2	C455	*F1	C671	*K4	C766	*G4	C1016	A5	C1254	*L1	CL1202	L3	CL5080	H4	E1000	N1	IC903	B4	R167	*D1	R553	M2	R916	*B5	R1031	K3	RB522	M5	TP602	H5		
C233	K1	C460	*F2	C672	*L4	C767	*G4	C1017	*K5	C1255	*L2	CL1203	L3	CL5095	*J4	E1001	H5	IC904	C5	R178	*C2	R554	*M2	R918	C4	R1032	K3	RB523	M5	TP605	K5		
C234	J1	C500	*L5	C673	*L4	C768	*G4	C1018	F2	C1256	*L2	CL1204	M2	CL5111	J5	E1002	H3	IC905	B5	R179	*C2	R555	M2	R920	B4	R1033	K3	RB524	M5	TP606	J5		
C235	J1	C501	*L5	C674	*L4	C769	*G3	C1019	E2	C1257	*K2	CL1205	M2	CL5126	K3	E1003	C3	IC906	B5	R180	*E1	R556	*M2	R924	B4	R1034	K3	RB525	N2	TP607	M4		
C236	J1	C502	*M5	C675	*L4	C803	*C4	C1020	*E3	C1258	*L2	CL1206	M2	CL5137	J3	E1004	E5	IC907	A5	R181	*C1	R557	M2	R925	B4	R1035	K3	RB526	*P2	TP1008	J5		
C237	K1	C506	*L5	C676	*L4	C804	*D3	C1021	*E3	C1259	*L2	CL1207	M2	CL5151	H3	E1005	*P5	IC908	C5	R182	*D2	R558	*N5	R926	B4	R1036	K3	RB527	*M3	TP1009	K5		
C238	K1	C507	*L5	C677	*L4	C805	*D3	C1022	*E2	C1260	*L2	CL1208	M2	CL5152	H3	E1006	*G1	IC911	B4	R200	*J3	R559	*N5	R927	B4	R1037	*K5	RB528	N2	TP1010	K5		
C239	J1	C508	N5	C680	L3	C806	*D3	C1023	*E2	C1261	*L2	CL1209	M2	CL5153	H3	E1007	*B3	IC912	*B3	R203	J3	R560	N4	R928	B4	R1038	*K5	RB529	*P2	TP1200	M2		
C240	J1	C509	*M5	C681	L3	C807	*D3	C1024	A5	C1262	*L2	CL1210	M2	CL5154	H4			IC913	C5	R204	J1	R561	N4	R929	B4	R1039	*K5	RB600	*H4	TP1201	M2		
C241	J1	C510	M4	C682	L3	C808	*D4	C1025	A2	C1263	*L2	CL1211	M2	CL5155	H4	F1000	B5	IC915	D5	R205	J1	R562	M2	R930	B4	R1049	E3	RB601	*H4	TP1202	M1		
C242	J1	C511	*M3	C683	K3	C809	*D3	C1026	A2	C1264	*K2	CL1212	M2	CL5156	H4	F1001	B5	IC916	B3	R206	*K2	R563	*M4	R931	B4	R1050	F2	RB607	*K4				
C243	K1	C512	*M4	C684	L3	C810	*D3	C1028	*B2	C1265	*L3	CL1213	M2	CL5157	H4	F1002	B5	IC917	B3	R207	*K2	R570	M4	R932	*C5	R1051	F3	RB608	*K5	X300	P4		

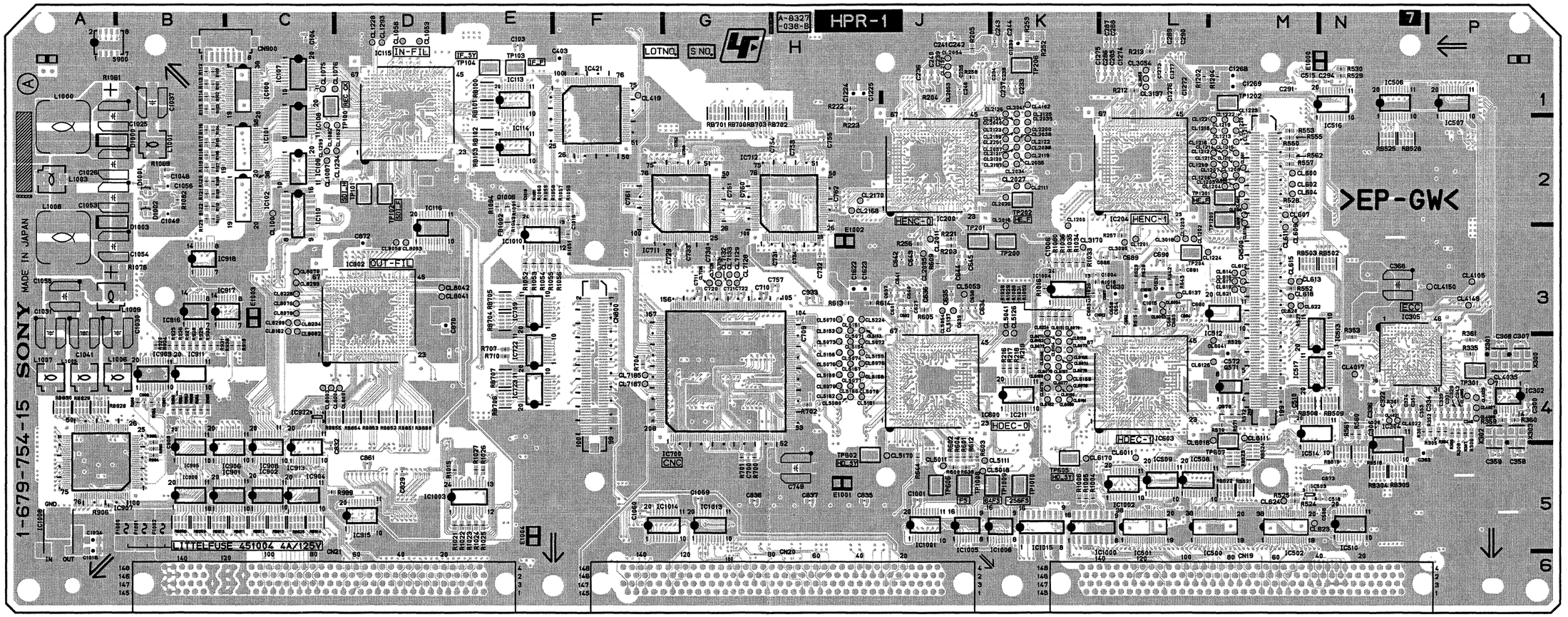

Components locations list; previous page

HPR-1 -A SIDE-
SUFFIX: -15

HPR-1
SUFFIX: -15

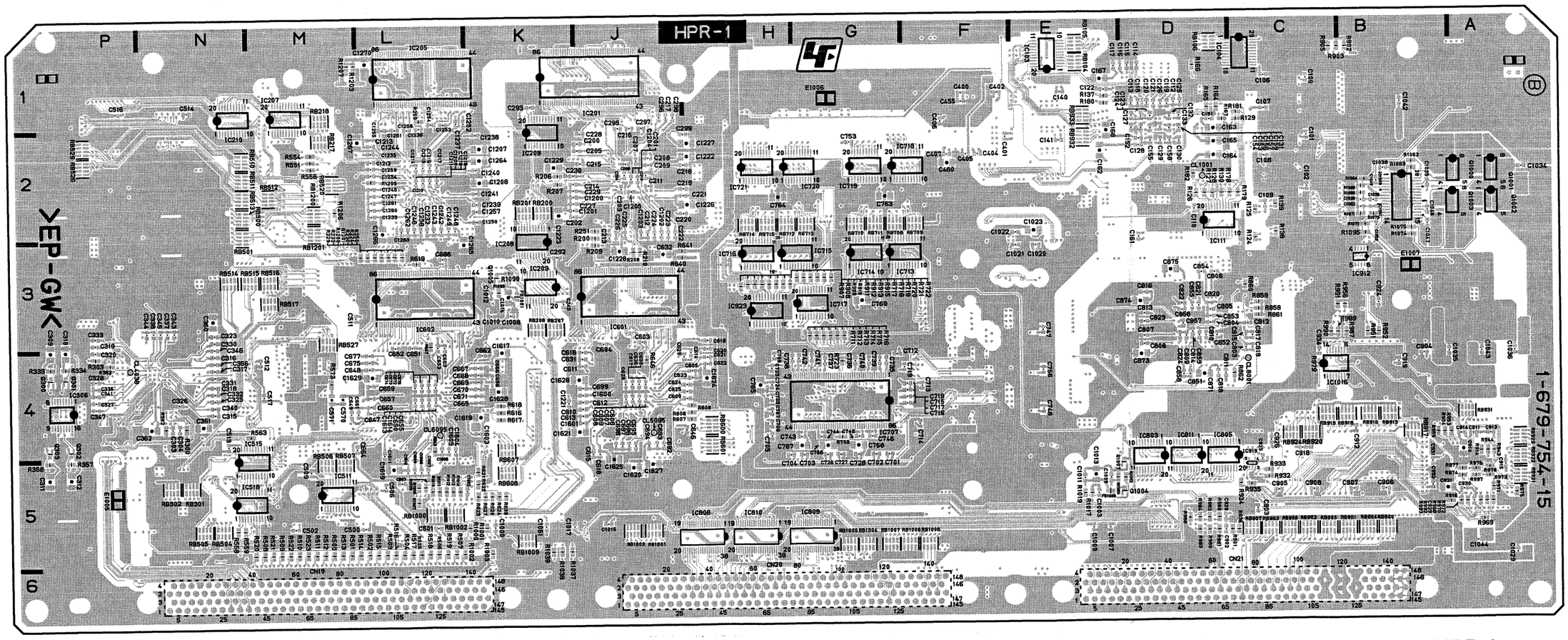

HPR-1 -B SIDE-
SUFFIX: -15

4-53 (b)

HP-101
SUFFIX: -15, 16, 18

HP-101 (1-677-262-15,16,18)

C1	C1	F1	D1	R25	*B1
C2	*C1			R26	B1
C3	C1	IC1	C1	R27	B1
C4	C1	IC2	*C1	R28	*B1
C5	C1	IC3	*B1	R29	*B1
C6	*C1	IC4	*B2		
C7	*C1	IC5	B1	RV1	B2
C8	*C1	IC6	B1		
C9	B2	IC7	*B1	RY1	A1
C10	B1	IC8	*B1		
C11	*B2			*:B SIDE	
C12	*B1	Q1	*D1		
C13	*B1				
C14	*C2	R1	C1		
C15	*C1	R2	C1		
C16	*B1	R3	*C1		
C17	C2	R4	*C1		
C18	D2	R5	C1		
C19	*C2	R6	*C1		
C20	*D2	R7	C1		
C21	D2	R8	*C1		
C22	*D2	R9	C1		
C23	*B1	R10	*C1		
C24	*B1	R11	C1		
C25	*B1	R12	*C1		
C26	*B1	R13	B2		
C27	*A2	R14	B2		
C28	*A2	R15	*B1		
		R16	*C1		
CN1	A2	R17	*C1		
CN2	D1	R18	*B1		
CN3	D1	R19	C1		
CN4	D1	R20	C1		
		R21	B1		
D1	*D1	R22	*A1		
D2	*A1	R23	*D1		
		R24	B1		

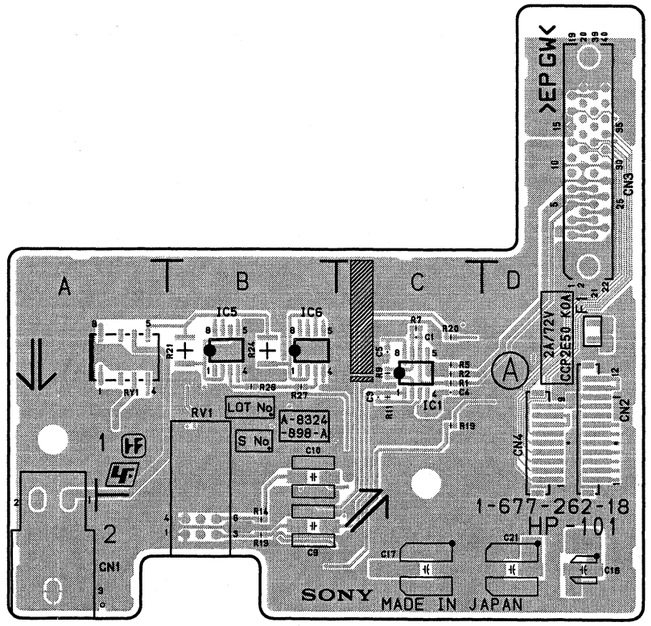

HP-101 -A SIDE-
SUFFIX: -15, 16, 18

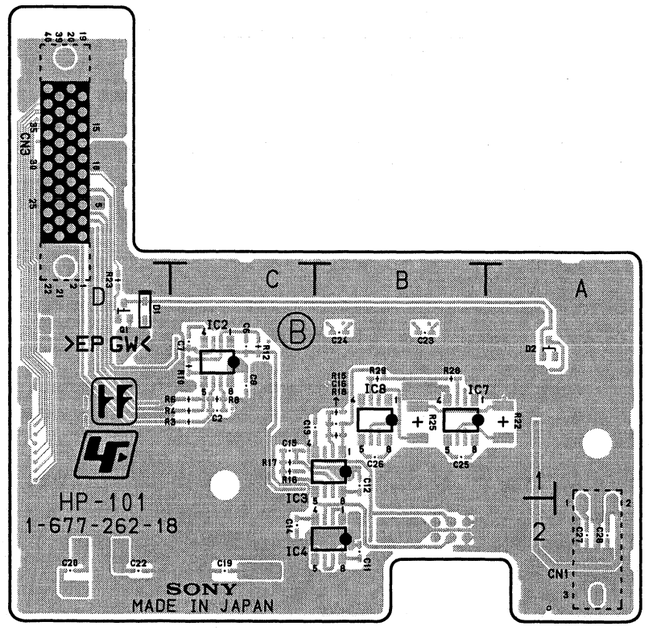

HP-101 -B SIDE-
SUFFIX: -15, 16, 18

4-54 (b)

HPR-1 (1-679-754-14)

C100	*C1	C248	*L2	C347	*P4	C656	*K4	C748	*E4	C1007	*E5	CL602	M2	CL3119	M2	CL6161	K4	IC502	M5	Q1002	*A2	R304	P4	R639	*K5	R982	*D5	RB100	E1	RB923	*A5
C101	*C2	C249	*L2	C348	P4	C657	*L4	C749	G5	C1008	*K3	CL603	M2	CL3120	M2	CL6162	K4	IC506	N2	Q1003	*A2	R305	P4	R640	*J3	R983	*D5	RB101	E1	RB924	*C4
C102	*C2	C250	*L2	C351	N4	C658	L3	C750	H5	C1009	*E5	CL604	M2	CL3121	M2	CL6170	K5	IC507	P2	Q1004	*D5	R306	P4	R641	*J3	R984	*D5	RB102	E2	RB925	C5
C106	*C1	C251	*L2	C353	N4	C659	*L4	C751	G2	C1010	*K3	CL605	M2	CL3122	M2	CL6224	K3	IC508	L5	Q1005	*K3	R307	P4	R642	L3	R985	*D5	RB103	E2	RB926	A1
C107	*C1	C252	*L2	C356	*N4	C660	*L4	C752	G2	C1011	*E5	CL606	M2	CL3123	M2	CL7128	G3	IC509	L5	Q1006	E2	R308	P4	R643	L3	R986	*D5	RB200	*K2	RB927	*A4
C108	*C2	C253	*L2	C357	P5	C661	*M4	C753	*G2	C1012	*K3	CL607	M2	CL3124	M2	CL7129	G3	IC510	M5	Q1007	*D5	R309	P4	R644	J5	R987	*B3	RB201	*K2	RB928	A4
C109	*C2	C254	*L2	C358	P5	C662	*K4	C754	H2	C1013	*E5	CL608	M2	CL3125	M2	CL7132	G3	IC511	*M5			R333	*P4	R645	*L4	R989	*C3	RB207	*K3	RB929	A4
C110	*D2	C255	*L2	C359	P5	C663	*L4	C755	H2	C1014	*K3	CL609	M2	CL3126	M2	CL7133	G3	IC512	M3	R100	B1	R334	*P4	R646	*J4	R990	*C3	RB208	*K3	RB930	A4
C112	*D1	C256	*L2	C400	*F1	C664	*L5	C756	*E4	C1015	*J5	CL610	M2	CL3137	L1	CL7134	G3	IC513	N4	R101	B1	R335	P4	R647	*L3	R991	*C3	RB210	*M2	RB931	*A4
C113	*D1	C257	*L2	C401	*F1	C665	*K4	C757	H3	C1017	*K5	CL611	M3	CL3168	K3	CL7135	G3	IC514	M5	R102	B1	R351	N4	R700	G5	R992	*A5	RB211	*M2	RB932	*E2
C114	*D1	C258	*L2	C402	*F2	C666	*K4	C758	H2	C1018	F2	CL612	M3	CL3170	K3	CL7136	G3	IC515	*N5	R103	B1	R352	P4	R701	G5	R993	A5	RB217	*M2	RB933	*E1
C115	*D1	C259	*L2	C403	F1	C667	*K4	C759	G2	C1019	E2	CL613	M3	CL3197	M2	CL7185	F4	IC516	N2	R104	B2	R353	N4	R702	H4	R994	A4	RB218	*M1	RB934	A4
C116	*D1	C260	*L2	C404	*F2	C668	*K4	C760	G2	C1020	*E3	CL614	M3	CL3199	M2	CL7187	F4	IC517	N4	R105	B2	R357	*P5	R703	*G4	R995	*A5	RB301	*N5	RB1000	*L5
C117	*E1	C261	*L2	C405	*F1	C669	*K4	C761	F2	C1021	*E3	CL615	M3	CL3200	M2	CL8001	*C4	IC600	J4	R106	B2	R358	*P5	R704	F4	R996	*A5	RB302	*N5	RB1001	*J5
C118	*D1	C262	*L1	C406	*F1	C670	*K4	C762	H2	C1022	*E2	CL616	M3	CL3201	M2	CL8003	C4	IC601	*J3	R107	B2	R359	P4	R707	E4	R997	*B5	RB304	N5	RB1002	*L5
C119	*D1	C263	*L1	C407	*F2	C671	*K4	C763	*G2	C1023	*E2	CL617	M3	CL4017	N4	CL8004	C4	IC602	*L3	R108	B2	R360	P4	R710	E4	R998	*A5	RB305	N5	RB1003	*J5
C120	*D1	C264	*K2	C408	*F1	C672	*L4	C764	*H2	C1025	A2	CL618	M3	CL4021	N4	CL8041	D3	IC603	L4	R109	B2	R361	P4	R711	*G3	R999	C5	RB400	F1	RB1004	*G5
C121	*D1	C265	*K2	C455	*F1	C673	*L4	C803	*C4	C1026	A2	CL619	M3	CL4022	N4	CL8042	D3	IC700	G4	R110	B2	R362	*P4	R712	*G3	R1000	*K5	RB401	F1	RB1005	*G5
C122	*E1	C266	*K2	C500	*L5	C674	*L4	C804	*D3	C1028	*B2	CL620	M3	CL4027	P4	CL8053	D3	IC707	*G4	R111	B2	R500	*M5	R713	*G3	R1001	*K5	RB402	F1	RB1006	*F5
C123	*D1	C267	*K2	C501	*L5	C675	*L4	C805	*D3	C1029	*A5	CL621	M3	CL4029	P4	CL8058	D3	IC709	E3	R112	B1	R501	*M5	R714	*G3	R1002	*L5	RB403	F2	RB1007	*G5
C124	*D1	C268	*L2	C502	*M5	C676	*L4	C806	*D3	C1030	B3	CL622	M3	CL4035	P4	CL8070	C3	IC711	G2	R113	B1	R502	*L5	R715	*G3	R1003	*K5	RB404	F2	RB1008	*F5
C125	*D1	C269	*L2	C506	*L5	C677	*L4	C807	*D3	C1031	A3	CL623	M5	CL4038	*P4	CL8076	C3	IC712	H2	R114	B1	R503	*L5	R716	*G3	R1004	K5	RB405	F2	RB1009	*K5
C126	*D1	C270	*L2	C507	*L5	C678	K4	C808	*D4	C1033	*B2	CL624	M5	CL4083	P4	CL8078	C3	IC713	*G3	R115	B1	R504	*L5	R717	*G3	R1005	K5	RB406	F2		
C127	*D1	C271	*L2	C508	*L5	C679	L3	C809	*D3	C1034	*A2	CL901	B5	CL4085	P4	CL8082	C3	IC714	*G3	R116	B2	R505	*L5	R718	*G3	R1006	K5	RB407	F2	S900	A1
C128	*D2	C272	*L2	C509	*M5	C680	L3	C810	*D3	C1035	*B4	CL902	B5	CL4102	K1	CL8091	D4	IC715	*H3	R117	B2	R506	*L5	R719	*G3	R1007	*L5	RB500	*N2		
C129	*D2	C273	*L2	C510	M4	C681	L3	C811	*D4	C1036	*A4	CL903	B4	CL4105	P3	CL8162	C3	IC716	*H3	R118	B2	R507	*L5	R720	*G3	R1008	*L5	RB501	*N2	TP100	C1
C130	*D2	C274	*L2	C511	*M3	C682	L3	C812	*C3	C1037	B1	CL904	A4	CL4149	P3	CL8228	C3	IC717	*G3	R119	B2	R508	*M5	R721	*G3	R1009	*L5	RB502	N3	TP101	D2
C131	*D2	C275	*L2	C512	*M4	C683	K3	C813	*D3	C1038	*B2	CL905	A5	CL4150	N3	CL8234	C3	IC718	*G2	R120	B2	R509	*M5	R722	*G3	R1010	*L5	RB503	M3	TP102	D2
C132	*D1	C276	*K2	C513	*N4	C684	L3	C814	*D3	C1039	*B2	CL906	A5	CL5011	J5	CL8293	C3	IC719	*G2	R121	B2	R510	*M5	R723	*G4	R1011	*L5	RB506	*M5	TP103	E1
C133	*D1	C277	K2	C514	*N1	C685	L3	C815	*C3	C1040	*B2	CL907	A4	CL5018	J5	CL8299	C3	IC720	*H2	R122	B2	R511	*M5	R858	*C3	R1012	*L5	RB507	*M5	TP104	E1
C140	*E1	C278	L1	C515	M1	C686	*L3	C816	*D3	C1041	A3	CL910	A5	CL5041	K3			IC721	*H2	R123	B2	R512	*M5	R859	*C3	R1013	*L5	RB508	M4	TP200	K3
C141	*E2	C279	L1	C516	*P1	C687	L3	C817	*C3	C1042	*B1	CL911	A5	CL5053	J3	CN19	M6	IC722	E4	R124	*C3	R513	*M5	R860	*C3	R1014	*L5	RB509	N4	TP201	J3
C150	D2	C280	L1	C517	*M4	C688	L3	C818	*D4	C1043	*A4	CL912	A5	CL5054	J3	CN20	H6	IC723	E4	R125	*C2	R514	*L5	R861	*C3	R1015	E5	RB510	*N2	TP202	K2
C151	*D1	C281	L1	C570	*M4	C689	L3	C819	*C4	C1044	*A5	CL1001	*D2	CL5070	H3	CN21	C6	IC802	D3	R126	*D2	R515	*L5	R862	*C4	R1016	K3	RB511	*N2	TP203	M2
C152	*D2	C282	K1	C571	*M4	C690	L3	C820	*D3	C1045	A5	CL1053	D1	CL5071	H3	CN302	P2	IC803	*D4	R127	*D2	R516	*L5	R900	B4	R1017	*E5	RB512	*M2	TP204	L3
C153	*D2	C283	L1	C572	M4	C691	L3	C821	*D3	C1046	*B2	CL1058	D1	CL5072	H4	CN303	P2	IC805	*C4	R128	*D2	R517	*L5	R901	*C5	R1018	K3	RB513	*N2	TP205	M2
C154	*D2	C284	L1	C600	*H4	C692	*J4	C822	*D3	C1047	*B2	CL1075	C1	CL5073	H4	CN304	P3	IC808	*H5	R129	*C1	R518	*L5	R904	B4	R1019	*E5	RB514	*N3	TP206	K1
C155	*D2	C285	L1	C601	J3	C693	*J4	C823	*D3	C1048	B2	CL1076	D1	CL5074	H4	CN500	M3	IC809	*G5	R130	*D2	R519	*L5	R906	B5	R1020	K3	RB515	*M3	TP207	M1
C156	*D2	C286	L1	C602	J3	C694	*J4	C824	*D3	C1049	B2	CL1082	C2	CL5075	H4	CN800	F4	IC810	*H5	R137	*E1	R520	*M5	R907	*H3	R1021	E5	RB516	*M3	TP301	P4
C157	*D2	C287	L1	C603	*J3	C695	*J4	C829	D5	C1050	*B2	CL1087	C2	CL5076	H4	CN900	C1	IC811	*D4	R138	*C3	R521	*M5	R908	*H3	R1022	E5	RB517	*M3	TP602	H5
C158	*D2	C288	L1	C604	*J3	C696	*J4	C832	C5	C1051	*B2	CL1162	D2	CL5077	H4			IC900	B5	R139	*C2	R522	*M5	R909	*H3	R1023	E5	RB518	N5	TP605	K5
C159	*D2	C289	L1	C605	*H4	C697	*J4	C835	H5	C1052	*B2	CL1228	D1	CL5078	H4	D1000	A2	IC901	B5	R164	*D1	R523	*M5	R910	*H3	R1024	E5	RB519	N5	TP606	J5
C160	E1	C290	L1	C606	*J4	C698	*J4	C836	G5	C1053	A2	CL1234	D2	CL5079	H4	D1001	B2	IC902	C5	R165	*D1	R524	M5	R911	*H3	R1025	E5	RB520	*M2	TP607	M4
C161	*D3	C291	M1	C607	*J4	C699	*J4	C837	H5	C1054	A3	CL1293	D1	CL5080	H4	D1002	B2	IC903	B4	R166	*D1	R525	M5	R912	*H3	R1026	E5	RB600	*H4	TP1008	J5
C200	*J2	C292	*K3	C608	*J4	C700	G5	C850	E3	C1055	A3	CL1299	C2	CL5095	*J4	D1003	A2	IC904	C5	R167	*D1	R528	M2	R913	*H3	R1027	E5	RB601	*H4	TP1009	K5
C201	*J2	C293	*K1	C609	*J4	C701	*G5	C851	*D4	C1056	B2	CL2011	J3	CL5111	J5			IC905	B5	R178	*C2	R529	N1	R914	*A5	R1028	K3	RB607	*K4	TP1010	K5
C202	*K2	C294	N1	C610	*J4	C702	*G5	C852	*D3	C1059	G5	CL2018	K3	CL5126	K3	E1000	N1	IC906	B5	R179	*C2	R530	N1	R915	*H3	R1029	K3	RB608	*K5		
C203	*J2	C295	*J2	C611	*J4	C703	*G5	C853	*D3	C1060	F5	CL2026	K2	CL5137	J3	E1001	H5	IC907	A5	R180	*E1	R550	M2	R918	C4	R1030	K3	RB700	G1	X300	P4
C204	*J2	C296	*J1	C612	*J4	C704	*H5	C854	*D3	C1061	*K5	CL2027	K2	CL5151	H3	E1002	H3	IC908	C5	R181	*C1	R551	*M2	R920	B4	R1031	K3	RB701	G1	X301	P4
C205	*J2	C297	*J2	C613	*J4	C705	*H4	C855	*D3	C1200	*K2	CL2034	K2	CL5152	H3	E1003	C3	IC911	B4	R182	*D2	R552	M3	R924	B4	R1032	K3	RB702	H1	X302	P4
C206	*J2	C298	*J1	C614	*H4	C706	*H4	C856	*D3	C1201	*K2	CL2035	K2	CL5153	H3	E1004	E5	IC912	*B3	R200	*J3	R553	M2	R925	B4	R1033	K3	RB703	G1	X303	P4
C207	*J2	C299	*H2	C615	*J4	C707	*H4	C857	*D3	C1202	*J2	CL2036	K2	CL5154	H4	E1005	*P5	IC913	C5	R203	J3	R554	*M2	R926	B4	R1034	K3	RB704	E3		
C208	*J2	C300	P4	C616	*J4	C708	*H4	C858	*D4	C1203	*J2	CL2037	K2	CL5155	H4	E1006	*G1	IC915	D5	R204	J1	R555	M2	R927	B4	R1035	K3	RB705	E3	*:B SIDE	
C209	*J2	C303	*N4	C617	*J4	C709	H3	C859	*D3	C1204	*J2	CL2038	K2	CL5156	H4	E1007	*B3	IC916	B3	R205	J1	R556	*M2	R928	B4	R1036	K3	RB706	E4		
C210	*J2	C304	*N4	C618	*J4	C710	G3	C860	D3	C1205	*J2	CL2039	K2	CL5157	H4			IC917	B3	R206	*K2	R557	M2	R929	B4	R1037	*K5	RB707	E4		
C211	*J2	C305	N3	C619	*H3	C711	G3	C861	D5	C1206	H1	CL2040	K2	CL5158	H4	F1000	B5	IC918	B3	R207	*K2	R558	*N5	R930	B4	R1038	*K5	RB708	*G2		
C212	*J2	C306	N4	C620	*H4	C712	*G4	C900	B4	C1207	*L2	CL2041	K1	CL5159	H4	F1001	B5	IC919	*C5	R208	*J3	R559	*N5	R931	B4	R1039	*K5	RB709	*F2		
C213	*J3	C307	P4	C621	*H4	C713	*F4	C901	B4	C1208	*L1	CL2053	J1	CL5160	H4	F1002	B5	IC920	*A1	R209	*J3	R560	N4	R932	*C5	R1049	E3	RB710	*G2		
C214	*K2	C308	P4	C622	*H4	C714	*F4	C902	*D5	C1209	*L1	CL2054	J1	CL5161	H4			IC921	*B4	R210	*J3	R561	N4	R933	*C5	R1050	F2	RB711	*G2		
C215	*J2	C313	N3	C623	*H4	C715	*F4	C903	*C5	C1210	*L1	CL2095	J3	CL5162	H4	FB1000	*E5	IC922	C4	R212	L1	R562	M2	R934	*C5	R1051	F3	RB712	*H2		
C216	*J2	C315	*N4	C624	*H4	C716	*F4	C904	*B4	C1211	*L2	CL2111	K2	CL5170	J5	FB1001	*K3	IC923	*H3	R213	L1	R563	*M4	R935	*C5	R1052	E3	RB713	*G2		
C217	*J1	C316	*N4	C625	*H4	C717	*F4	C905	*C5	C1212	*L2	CL2119	K2	CL5224	H3	FB1002	E2	IC1000	K5	R214	*L2	R570	M4	R936	*C5	R1053	E3	RB714	*H2		
C218	*H2	C317	*N4	C626	*J4	C718	*F4	C906	*B5	C1213	*K2	CL2120	K2	CL6011	L5			IC1001	J5	R215	*M2	R571	M4	R938	C4	R1054	E3	RB715	*H2		
C219	*H2	C318	*N4	C627	J3	C719	*F4	C907	*B5	C1214	*L2	CL2121	K2	CL6018	M4	IC100	C1	IC1002	L5	R216	K4	R572	M4	R943	*A5	R1055	E3	RB850	D4		
C220	*H2	C319	*P3	C628	*J4	C720	G3	C908	*C5	C1215	*L2	CL2122	K2	CL6041	M4	IC101	C2	IC1003	E5	R217	K4	R573	*M4	R944	*A5	R1056	F3	RB851	D4		
C221	*H2	C320	*P4	C629	*J4	C721	G3	C909	B4	C1216	*L2	CL2123	K2	CL6053	L3	IC102	C2	IC1004	K3	R218	K4	R600	J5	R951	*B3	R1057	F2	RB852	D4		
C222	*J2	C321	P4	C630	*J4	C722	G3	C910	B5	C1217	*L2	CL2124	K2	CL6054	L3	IC107	C1	IC1005	J5	R219	K4	R601	J5	R952	*B3	R1058	F2	RB853	D4		
C223	*J2	C322	N4	C631	*J4	C723	*H4	C911	*B5	C1218	*L2	CL2125	K1	CL6070	K3	IC108	C1	IC1006	K5	R221	J3	R602	J5	R953	*A5	R1059	E2	RB854	D4		
C224	*J2	C323	*N3	C632	H4	C724	*H4	C912	*B4	C1219	*L2	CL2126	K1	CL6071	K4	IC109	C2	IC1008	A5	R222	H1	R603	J5	R954	*B5	R1060	E2	RB855	C4		
C225	*J2	C324	N4	C633	H3	C725	*H4	C913	*A5	C1220	M1	CL2137	J1	CL6072	K4	IC110	C2	IC1009	*B2	R223	H2	R604	J5	R955	*B5	R1061	A1	RB900	*B5		
C226	*J2	C325	*N4	C634	J3	C726	*G5	C914	*A5	C1221	*K4	CL2168	H2	CL6073	K4	IC111	*D3	IC1010	E3	R224	*L3	R605	J3	R956	*B3	R1062	*B2	RB901	*B5		
C227	*K2	C326	*N4	C635	J3	C727	*G5	C915	*A5	C1600	*J4	CL2170	H2	CL6074	K4	IC113	E1	IC1013	G5	R227	*L3	R606	*H4	R960	B4	R1063	*B2	RB902	*C5		
C228	*J2	C327	*P4	C636	J3	C728	*G5	C918	*C5	C1601	*J4	CL2197	K2	CL6075	K4	IC114	E2	IC1014	F5	R228	*L3	R607	*H4	R961	B4	R1064	*B2	RB903	*C5		
C229	*K2	C328	*P4	C637	J3	C729	G3	C919	*B4	C1602	H3	CL2199	K2	CL6076	K4	IC115	D1	IC1015	K5	R229	*L3	R608	*H4	R962	B4	R1065	*B2	RB904	*B5		
C230	*K2	C329	P4	C638	J3	C730	G3	C923	*D5	C1603	*K4	CL2200	K2	CL6077	K4	IC116	D3			R230	*L3	R609	J3	R963	B4	R1066	*B2	RB905	*C5		
C231	H2	C330	*N3	C639	J3	C731	H3	C924	*B3	C1604	*L4	CL2201	K2	CL6078	K4	IC200	J2	L1000	A2	R233	*L3	R612	J5	R964	B4	R1069	B2	RB906	*C5		
C232	H1	C331	*N4	C640	J3	C732	H3	C925	*C5	C1605	*L4	CL3011	L3	CL6079	K4	IC201	*K1	L1001	B2	R234	L1	R613	H3	R965	B4	R1071	*B2	RB907	*C5		
C233	K1	C332	*N4	C641	J3	C733	G3	C926	*C4	C1606	*L4	CL3018	L3	CL6080	K4	IC203	*K3	L1003	A2	R235	M1	R614	H3	R967	*A5	R1072	*B2	RB908	B5		
C234	J1	C333	*P3	C642	J3	C734	H3	C927	*A1	C1607	*L5	CL3026	L3	CL6095	*L4	IC204	L2	L1005	A4	R250	*L3	R615	L3	R968	*A5	R1073	*B2	RB909	B5		
C235	J1	C334	P4	C643	J3	C735	*G4	C928	*B4	C1608	*L5	CL3027	L3	CL6111	M4	IC205	*L1	L1006	B4	R251	*J2	R616	*K4	R969	*A5	R1074	*B3	RB910	B5		
C236	J1	C335	*P4	C644	J3	C736	*G4	C929	A5	C1609	*L5	CL3034	M2	CL6126	M4	IC207	*M2	L1007	A4	R252	K1	R617	*K4	R970	*A5	R1075	*B2	RB911	C5		
C237	K1	C336	N4	C645	J3	C737	*G4	C930	*A5	C1610	*L5	CL3035	M2	CL6137	L3	IC208	*K2	L1008	A3	R253	K1	R618	*K4	R971	*A5	R1076	A3	RB912	C5		
C238	K1	C337	*N3	C646	*H4	C738	*H4	C931	*B4	C1611	*L4	CL3036	M2	CL6151	K3	IC209	*K2	L1009	A3	R254	*L1	R619	*L3	R972	*A5	R1080	K3	RB913	C5		
C239	J1	C338	*N3	C647	*L4	C739	*G4	C932	*B5	C1612	L3	CL3037	M2	CL6152	K4	IC210	*N2			R255	*L1	R620	*K5	R973	*A5	R1081	E2	RB914	C5		
C240	J1	C339	P4	C648	*L4	C740	*G4	C933	H3	C1613	*L4	CL3038	M2	CL6153	K4	IC211	K4	Q300	*P4	R256	J3	R621	*K5	R974	*A5	R1082	B2	RB915	*B4		
C241	J1	C340	*N4	C649	*M4	C741	*G4	C1000	*K5	C1614	*L4	CL3039	M2	CL6154	K4	IC302	P4	Q301	*P4	R257	L3	R622	*K5	R975	*A5	R1089	*E5	RB916	*B4		
C242	J1	C341	*P4	C650	*L4	C742	*G4	C1001	J5	C1615	L3	CL3040	M2	CL6155	K4	IC304	N5	Q302	*P4	R258	J1	R623	*K5	R976	*A5	R1090	*K3	RB917	*B5		
C243	K1	C342	P4	C651	*L3	C743	*G4	C1002	*L5			CL3041	M2	CL6156	K4	IC305	N4	Q303	*P4	R259	*L1	R624	*K5	R977	*A5	R1091	E2	RB918	*B4		
C244	K1	C343	*N3	C652	*L3	C744	*G4	C1003	*E5	CL100	C2	CL3053	L1	CL6157	K4	IC306	*P4	Q570	M4	R300	*N4	R627	*K5	R978	*A5	R1092	*D5	RB919	*C4		
C245	*K3	C344	*N3	C653	*L4	C745	*G4	C1004	K3	CL419	F1	CL3054	L1	CL6158	K4	IC400	F1	Q571	M4	R301	N4	R628	L3	R979	*C4	R1093	*K3	RB920	*C4		
C246	J1	C345	*N3	C654	L3	C746	*G4	C1005	*E5	CL600	M2	CL3095	L3	CL6159	K4	IC500	L5	Q1000	*A2	R302	*N4	R629	L3	R980	*D5	R1094	E2	RB921	*A5		
C247	*L2	C346	*N3	C655	*L4	C747	*E3	C1006	K3	CL601	M2	CL3111	L3	CL6160	K4	IC501	L5	Q1001	*A2	R303	*P4	R638	J5	R981	*D5	R1095	*B3	RB922	*A5		

HPR-1
SUFFIX: -14

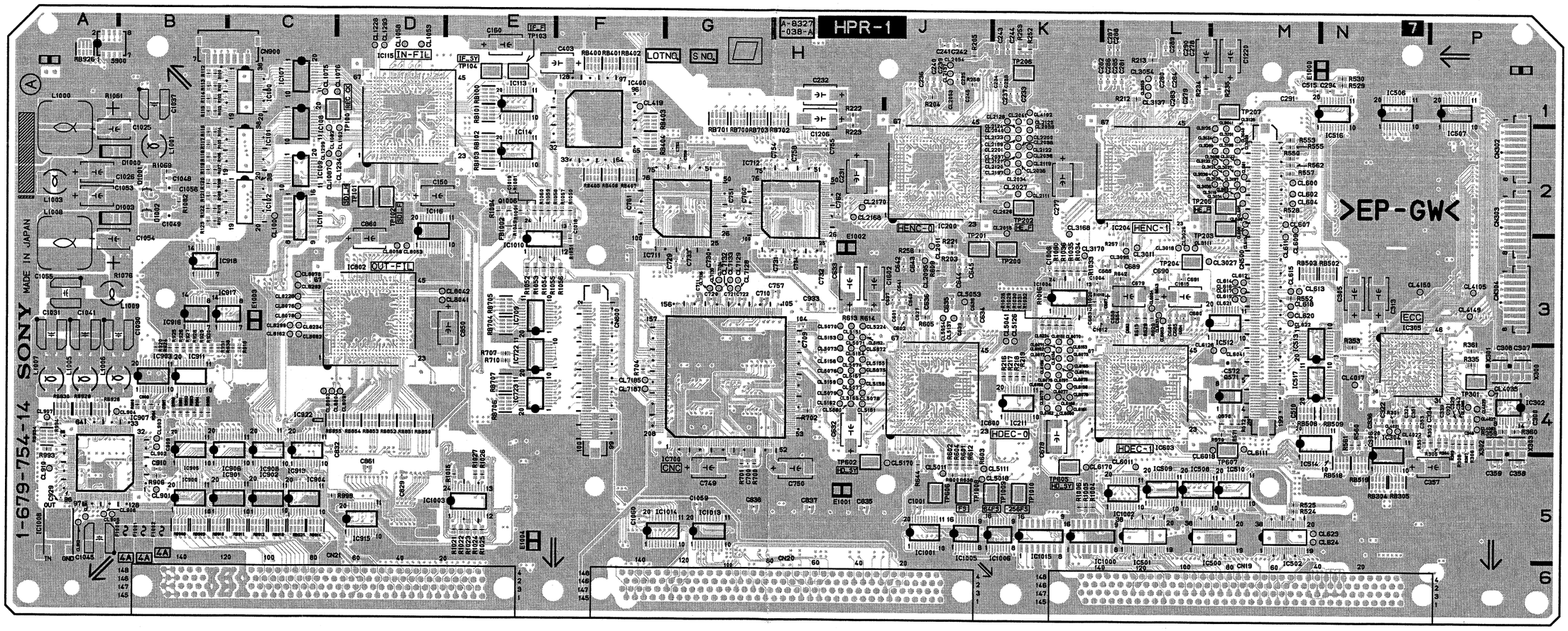

Components locations list; previous page

HPR-1 -A SIDE-
SUFFIX: -14

4-52 (a)

HPR-1
SUFFIX: -14

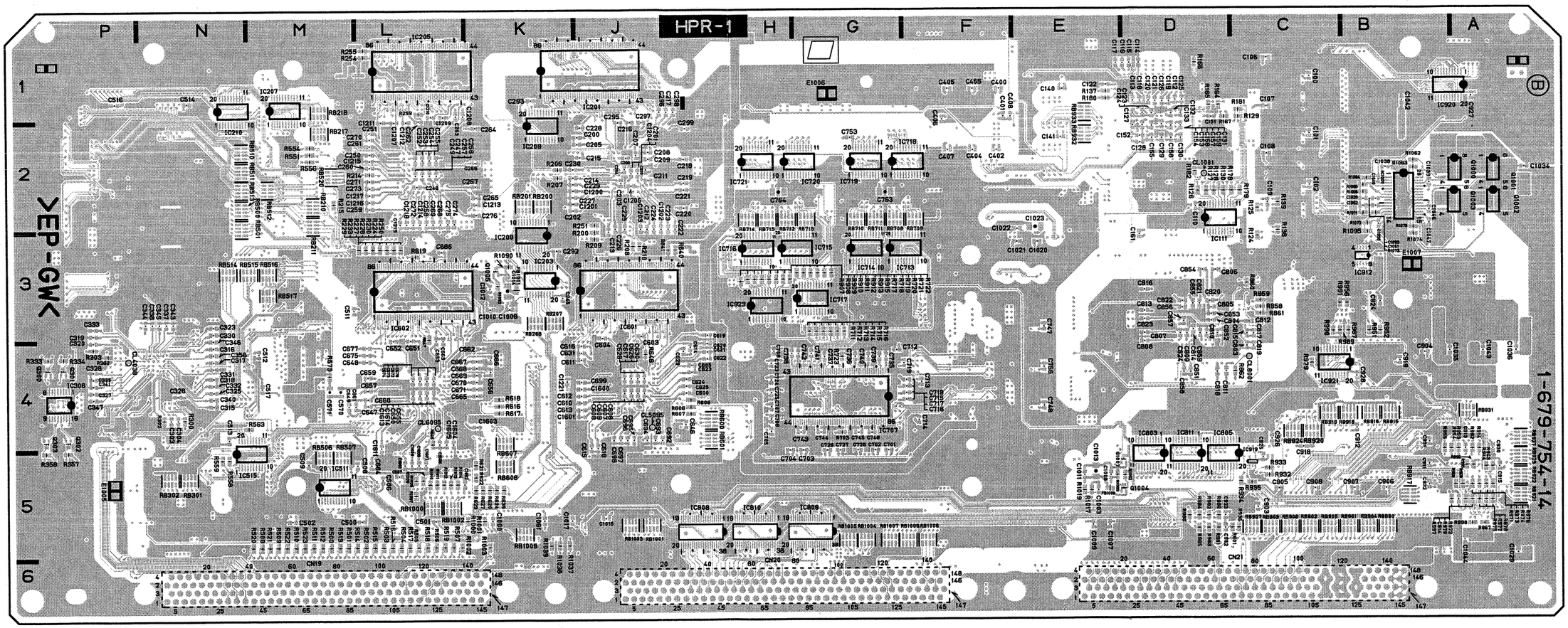

HPR-1 -B SIDE-
SUFFIX: -14

HP-101 (1-677-262-14)

C1	C1	F1	D1	R25	*B1
C2	*C1			R26	B1
C3	C1	IC1	C1	R27	B1
C4	C1	IC2	*C1	R28	*B1
C5	C1	IC3	*B1	R29	*B1
C6	*C1	IC4	*B2		
C7	*C1	IC5	B1	RV1	B2
C8	*C1	IC6	B1		
C9	B2	IC7	*B1	RY1	A1
C10	B2	IC8	*B1		
C11	*B2			*:B SIDE	
C12	*B2	Q1	*A1		
C13	*B1				
C14	*C2	R1	C1		
C15	*C1	R2	C1		
C16	*B1	R3	*C1		
C17	C2	R4	*C1		
C18	D2	R5	C1		
C19	*C2	R6	*C1		
C20	*D2	R7	C1		
C21	D2	R8	*C1		
C22	*D2	R9	C1		
C23	*B1	R10	*C1		
C24	*B1	R11	C1		
C25	*B1	R12	*C1		
C26	*B1	R13	B2		
C27	*A2	R14	B2		
C28	*A2	R15	*B1		
		R16	*C2		
CN1	A2	R17	*C2		
CN2	D1	R18	*B1		
CN3	D1	R19	C2		
CN4	D1	R20	C1		
CN5	D1	R21	B1		
		R22	*A1		
D1	*A1	R23	*A1		
D2	*A1	R24	B1		

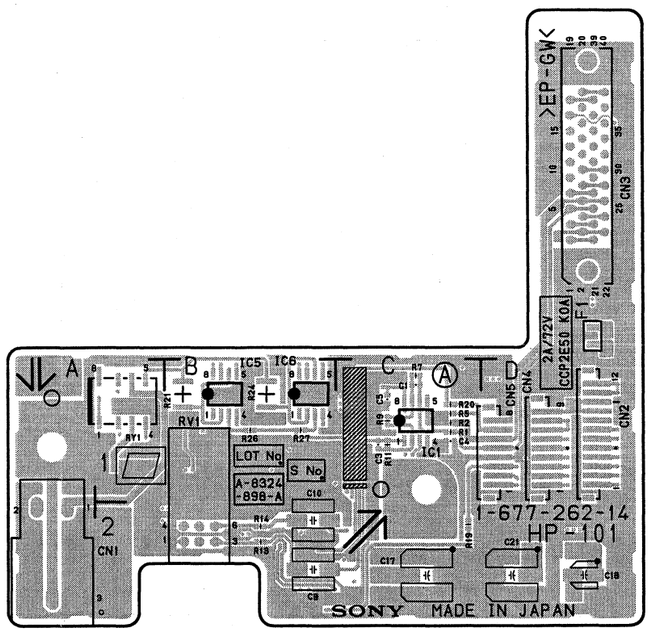

HP-101 -A SIDE-
SUFFIX: -14

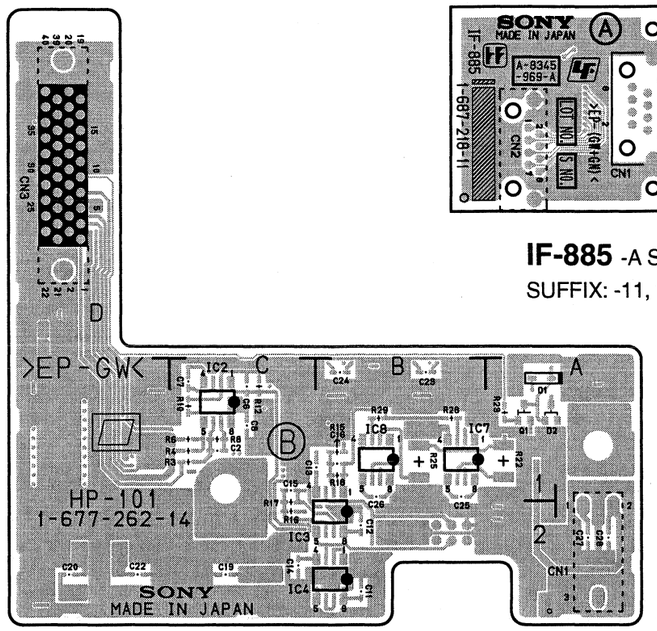

HP-101 -B SIDE-
SUFFIX: -14

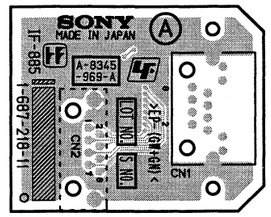

IF-885 -A SIDE-
SUFFIX: -11, 12

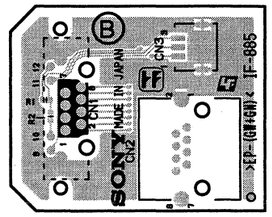

IF-885 -B SIDE-
SUFFIX: -11, 12

IF-886 (1-687-219-11,12)

C1	B2
C2	B2
C3	C2
C4	C2
C5	C2
C6	C2
C7	C2
C8	C2
CN1	*B3
CN2	B1
IC1	B2
IC2	B2
IC3	B2
IC4	B2
IC5	C2
IC6	C2
IC7	C2
IC8	C2
L1	C3
L2	C3
L3	C3
R1	B2
R2	B2
R3	C3
R4	C3
RB1	B2
RB2	B2
RB3	B2
RB4	B2
RB5	B2
RB6	B2
RB7	B3
RB8	B3
RB9	C3
RB10	C3
RB11	C3

*:B SIDE

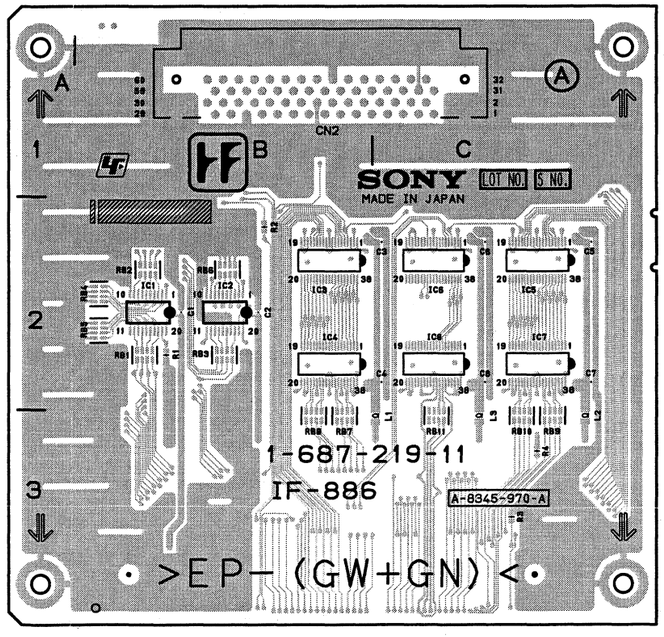

IF-886 -A SIDE-
SUFFIX: -11, 12

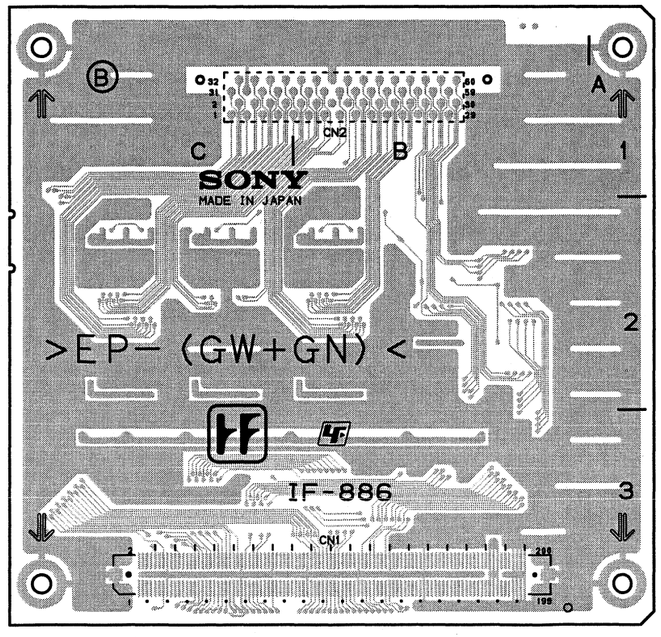

IF-886 -B SIDE-
SUFFIX: -11, 12

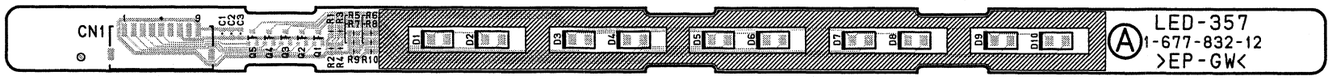

LED-357 -A SIDE-
SUFFIX: -12, 13

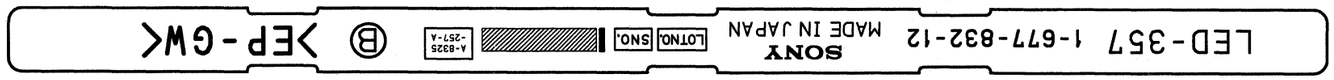

LED-357 -B SIDE-
SUFFIX: -12, 13

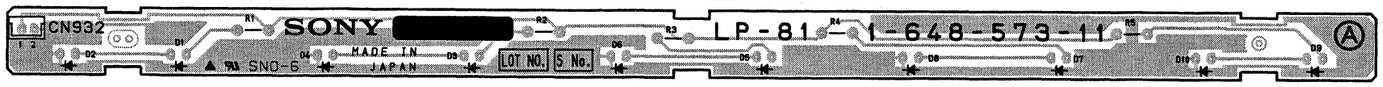

(Circuit pattern: B side)

LP-81 -A SIDE-
SUFFIX: -11, 21, 22

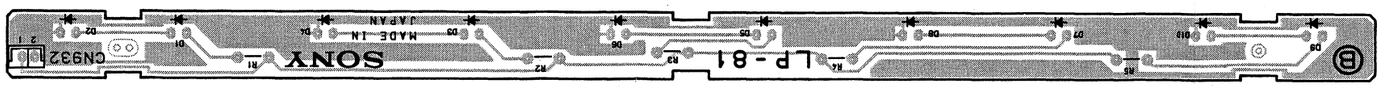

LP-81 -B SIDE-
SUFFIX: -11, 21, 22

MB-884 (1-677-263-16,17)

CN1	C4
CN3	J4
CN4	C5
CN5	F5
CN6	J5
CN7	C5
CN8	F5
CN9	J5
CN10	C6
CN13	C6
CN14	F6
CN15	J6
CN16	C7
CN17	F7
CN18	J7
CN19	C7
CN20	F7
CN21	J7
CN22	C8
CN23	F8
CN24	J8
CN25	C9
CN26	F9
CN27	J9
CN41	C9
CN42	G9
CN51	K1
CN61	C3
CN62	E3
CN65	H2
CN67	E9
CN68	H4
CN69	J2
CN71	L7
CN72	L7
CN73	H1
CN74	A3
CN100	L2
Q1	H2
Q2	H2
R1	H3
R2	H2
THP1	K3
THP2	K2
THP3	K2

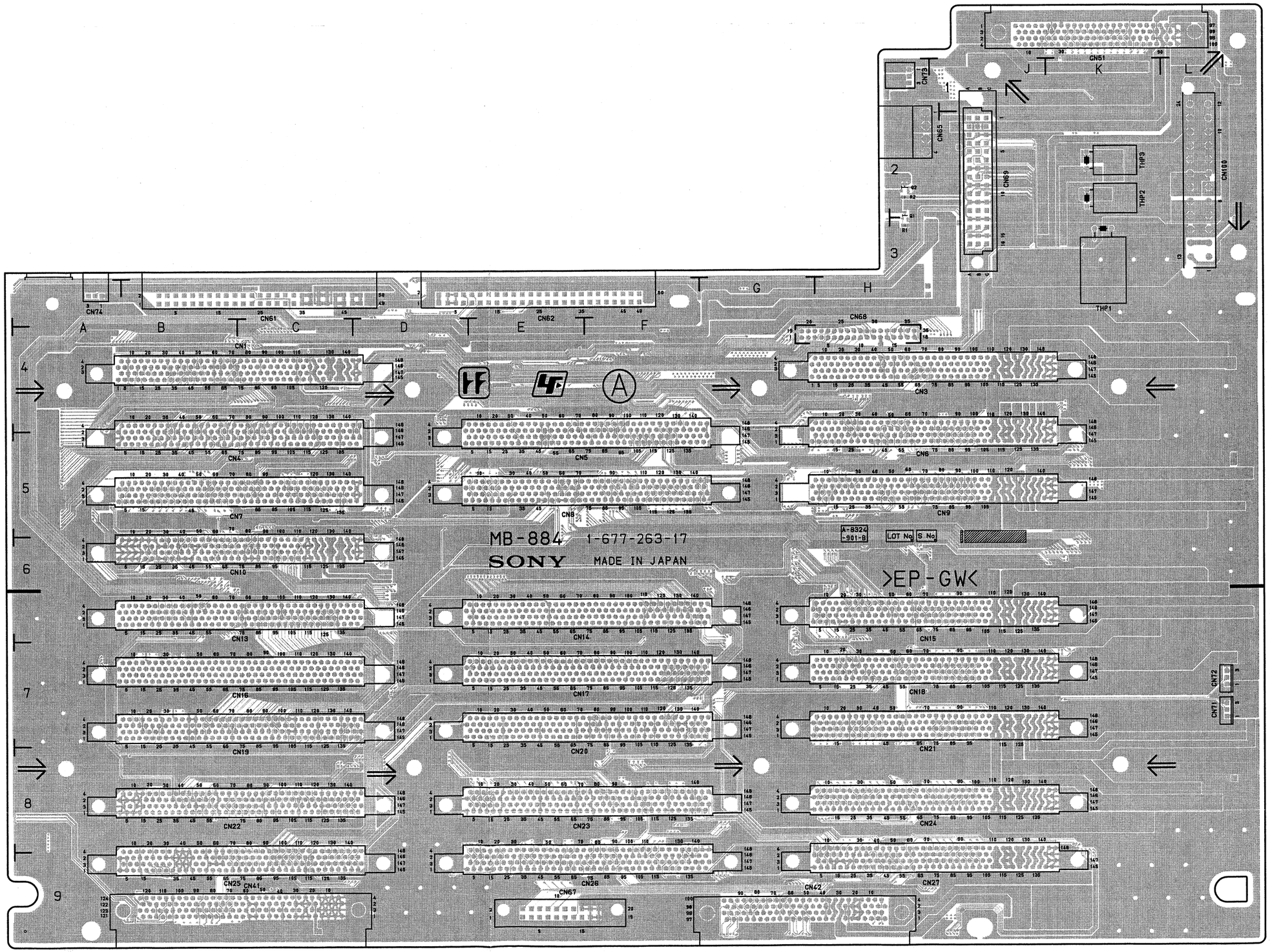

MB-884 -A SIDE-
SUFFIX: -16, 17

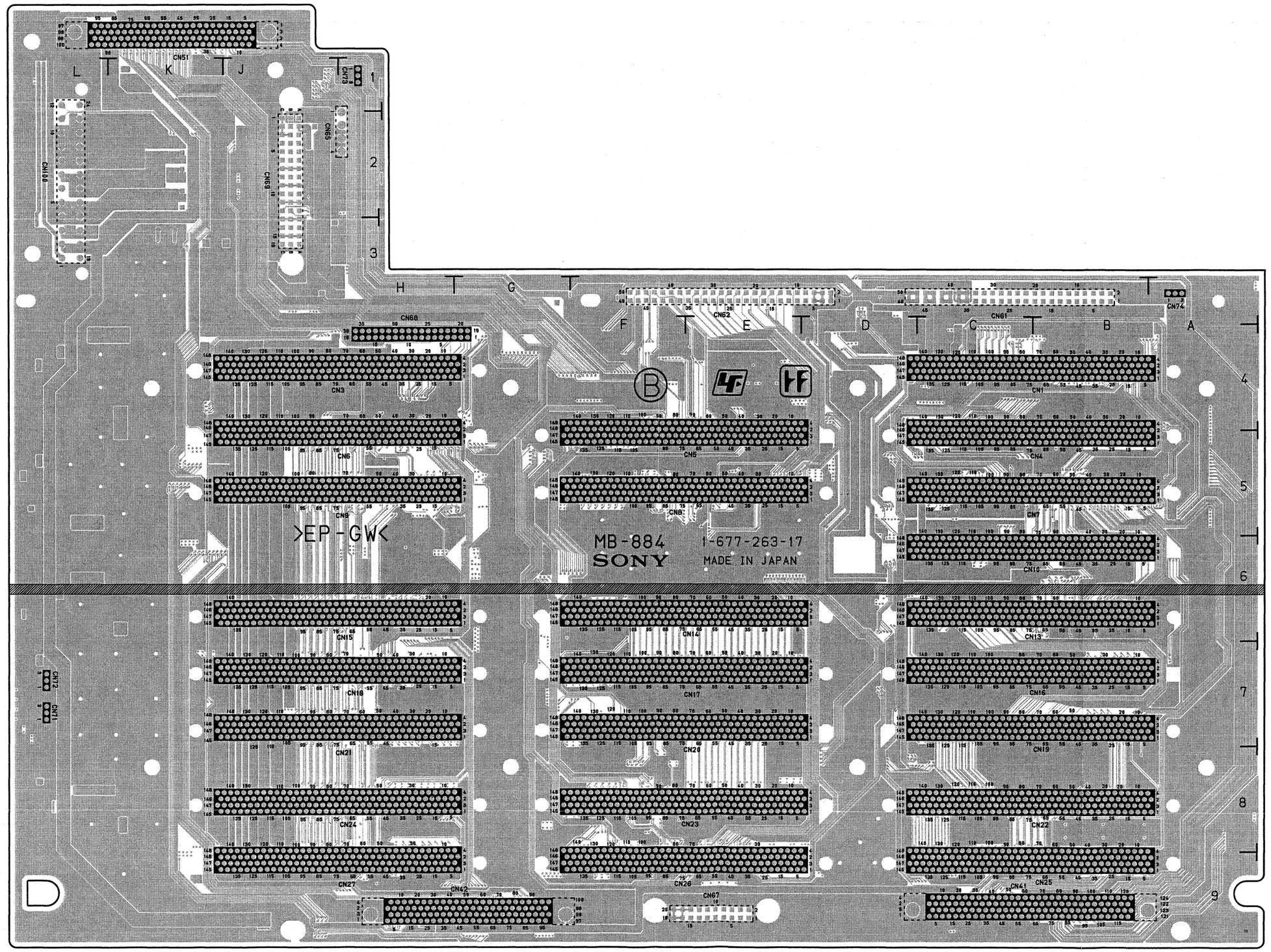

MB-884 -B SIDE-
SUFFIX: -16, 17

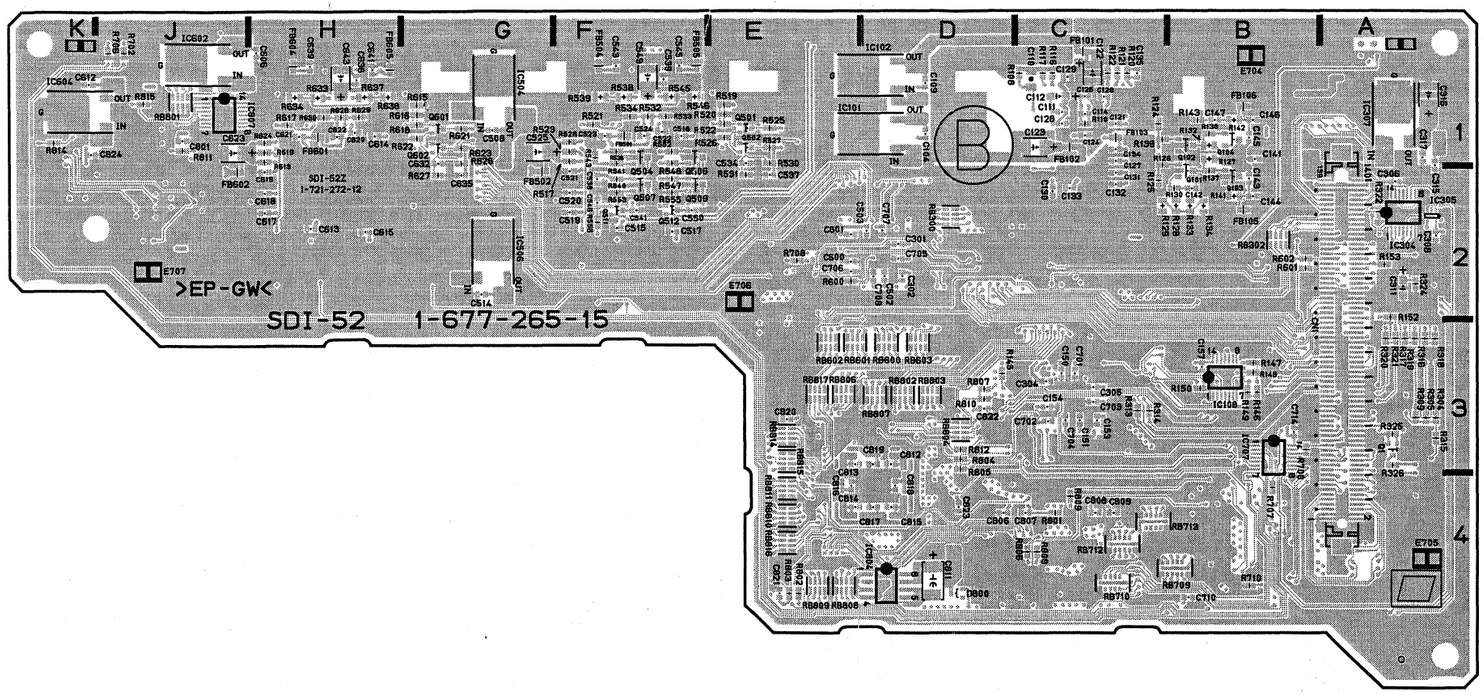

SDI-52 -B SIDE-
SUFFIX: -15

R525	*E1	R802	*E4
R526	*E1	R803	*E4
R527	*E1	R804	*D3
R528	*F1	R805	*D3
R529	F2	R806	*C4
R530	*E1	R807	*D3
R531	*E2	R808	*C4
R532	*F1	R809	*C4
R533	*F1	R810	*D3
R534	*F1	R811	*J1
R535	F1	R812	*D3
R536	*F1	R814	*K1
R537	F1	R815	*J1
R538	*F1	R816	E4
R539	*F1	R817	E4
R540	*F2	R818	E4
R541	*F1		
R542	F1	RB100	C2
R543	*F1	RB101	C2
R544	E1	RB102	C2
R545	*F1	RB103	A2
R546	*F1	RB104	B2
R547	*F2	RB105	B2
R548	*F1	RB106	B2
R549	F1	RB107	B2
R550	F1	RB300	*D2
R551	F1	RB301	A2
R552	*F1	RB302	*B2
R553	*F2	RB303	B1
R554	F1	RB304	A1
R555	*F2	RB500	E1
R556	*F2	RB501	E2
R557	F1	RB502	F2
R558	F1	RB600	*D3
R559	E1	RB601	*E3
R560	F1	RB602	*E3
R561	E1	RB603	*D3
R600	*E2	RB604	G1
R601	*B2	RB605	G2
R602	*B2	RB606	H2
R603	G2	RB612	E3
R604	H2	RB700	A4
R605	H2	RB701	A4
R606	H2	RB702	A3
R607	H2	RB703	A4
R608	H2	RB704	A4
R609	H2	RB705	B4
R610	H2	RB706	B4
R611	J2	RB707	B3
R612	J2	RB708	B3
R613	*H1	RB709	*B4
R614	H2	RB710	*C4
R615	*G1	RB711	B4
R616	*G1	RB712	*C4
R617	*H1	RB713	*C4
R618	*G1	RB801	*J1
R619	*H1	RB802	*D3
R620	J2	RB803	*D3
R621	*G1	RB804	*D3
R622	*G1	RB806	*E3
R623	*G1	RB807	*D3
R624	*H1	RB808	*E4
R625	H2	RB809	*E4
R626	*G1	RB810	*E4
R627	*G2	RB811	*E4
R628	*H1	RB813	E3
R629	*H1	RB814	*E3
R630	*H1	RB815	*E3
R631	H1	RB816	*E4
R632	H1	RB817	*E3
R633	*H1		
R634	*H1	TP100	D2
R635	H1	TP300	A4
R636	G1	TP500	E1
R637	*H1	TP501	F1
R638	*H1	TP600	G1
R639	H1	TP601	H1
R640	H1		
R641	H1	*:B SIDE	
R642	H1		
R643	H1		
R644	G1		
R645	G1		
R700	*B3		
R702	*J1		
R704	B4		
R705	B4		
R706	*J1		
R707	*B4		
R708	*E2		
R710	*B4		
R801	*C4		

SS-89 (1-677-285-17)

C100	*J1	C372	K4	C716	N2	C908	*H4	C1508	*G1	CL24	J4	D303	*J4	IC703	P4	IC2113	D5	R309	*L4	R548	*N3	R709	*P3	R801	*P4	R1302	*H5	R2130	*C5	RB1105	*D1	TP702	P2
C101	J4	C373	K4	C717	*P3	C909	*H4	C1509	*G1	CL25	J4	D304	*L5	IC704	N3	IC2131	*C5	R310	*K4	R549	*N2	R710	*P3	R802	*P4	R1303	B3	R2131	*D5	RB1106	D1	TP703	P2
C102	*L1	C374	K4	C718	P2	C910	H4	C1510	*F2	CL26	J4	D305	J4	IC705	N2	IC2132	D5	R311	*K5	R550	*N2	R711	*N2	R803	*N4	R1304	B3	R2132	*D5	RB1107	*D1	TP704	P2
C103	*L1	C375	P5	C719	*P3	C911	H3	C1511	*G2	CL27	J4	D306	*J4	IC706	N2	IC2133	E4	R312	*J5	R551	*M2	R712	*N2	R804	*N3	R1305	B3	R2133	*D5	RB1108	D1	TP705	N4
C104	*J1	C376	P5	C720	N2	C912	*H3	C1512	*G2	CL30	K2	D307	J4	IC707	N2	IC2134	P4	R313	*K4	R552	*N2	R713	*P2	R805	*P3	R1306	B3	R2134	*E5	RB1109	*D1	TP706	P4
C105	*J2	C377	P5	C721	P3	C913	*H4	C1513	*G2	CL31	K3	D308	*J4	IC708	N2	IC2301	F3	R314	*K5	R553	*M2	R714	*P2	R806	*N4	R1307	C4	R2135	*D5	RB1110	D1	TP707	M5
C106	*K1	C378	K5	C722	P2	C914	B5	C1514	*G2	CL32	L2	D309	*K4	IC709	N1	IC2302	G3	R315	*J5	R554	*M3	R715	*P3	R807	*P4	R1308	C4	R2136	*D5	RB1111	*C1	TP708	M5
C107	*K1	C500	*M5	C723	P3	C915	B5	C1515	*G2	CL100	C3	D310	*K5	IC710	N3	IC2303	G4	R316	*J4	R555	*M2	R716	*P3	R808	*N4	R1309	*C4	R2137	*D5	RB1112	C1	TP709	N4
C108	*J2	C501	N4	C724	*N1	C916	B5	C1516	*G2	CL101	C3	D311	J4	IC711	P2	IC2304	H4	R317	*K5	R556	*M2	R717	*N2	R809	*P4	R1310	C4	R2138	*D5	RB1113	*C1	TP710	P4
C109	*J1	C502	*M5	C725	*N2	C917	A5	C1517	*F2	CL102	C3	D312	*J4	IC712	P2	IC2305	H4	R318	*K4	R557	*M2	R718	*P2	R810	*P4	R1311	*C5	R2139	*D5	RB1114	C1	TP711	N3
C110	*J1	C503	M4	C726	*P1	C918	*J5	C1518	*G2	CL103	*C3	D313	K4	IC713	N4	IC2306	E2	R319	*K5	R558	*M3	R719	*P2	R811	*P4	R1312	*E3	R2140	*D5	RB1115	*C1	TP712	P3
C111	*L1	C505	*K5	C727	*P2	C919	A5	C1519	*F2	CL104	C3	D314	*K4	IC714	N3	IC2307	G3	R320	J4	R559	*M2	R720	*N2	R812	*N4	R1313	*E4	R2141	*C5	RB1116	C1	TP713	P2
C112	L1	C509	*J5	C728	*P3	C920	*H5	C1520	*G2	CL105	C3	D315	K4	IC715	P3	IC2308	*G3	R321	J4	R562	*M2	R721	P3	R813	*N4	R1318	*H5	R2142	*F5	RB1117	A2	TP900	H1
C113	L2	C510	*J5	C729	*P4	C921	*H5	C1521	*G2	CL106	C2	D316	*K4	IC716	N4	IC2309	*G3	R322	*J1	R563	*M2	R722	P3	R814	*N4	R1319	*H5	R2143	*D5	RB1500	*A1	TP1100	F1
C114	*L1	C511	*J5	C730	P2	C922	J5	C1522	*G2	CL108	C3	D317	*H5	IC717	N5	IC2310	F3	R323	*L3	R564	*M2	R723	*P3	R815	*N4	R1320	*H5	R2144	*D5	RB1501	*B1	TP1101	F1
C116	*L4	C512	*J5	C731	N2	C923	*J5	C1523	*F1	CL109	C3	D500	*M2	IC718	N5			R324	K4	R567	*M2	R724	*P4	R816	*P4	R1321	*H5	R2306	G3	RB1502	*F2	TP1300	B4
C117	J2	C513	*J5	C732	P1	C1100	*E1	C1524	*G2	CL111	*C3	D700	*M5	IC719	N5	L300	H2	R325	K4	R568	*M2	R725	*N2	R817	*P4	R1340	*B3	R2307	H5	RB1700	*E5	TP1500	E1
C118	J2	C514	*J5	C733	N1	C1101	*B3	C1525	*F1	CL112	C3	D701	*M5	IC720	M5	L301	H3	R326	K4	R569	*M2	R726	*P2	R818	*P4	R1506	*F1	R2308	*H4	RB1701	*E5	TP1501	E1
C119	L2	C515	*K5	C734	*P3	C1102	B3	C1526	*F2	CL113	*C3	D900	*H4	IC721	N4	L902	*B5	R327	P5	R570	*M2	R727	*P4	R819	*P4	R1507	*G1	R2309	*H4	RB1702	*E5	TP1502	F1
C120	L2	C516	*K5	C735	*P3	C1103	*F3	C1527	*E1	CL114	B3	D901	*H2	IC722	P4	L904	*A5	R328	P5	R571	*M3	R728	*P4	R820	*P4	R1508	*F1	R2310	*H4	RB2100	*B4	TP1503	F1
C121	J2	C517	K5	C736	*P3	C1104	*E3	C1528	*F2	CL115	*C3	D902	J5	IC723	P4	L1300	A3	R329	*L4	R572	*M2	R729	*N2	R821	*P4	R1509	*G2	R2311	*G5	RB2101	*B4	TP1504	B1
C122	*J2	C518	*J5	C737	*P3	C1105	*C2	C1529	*F2	CL116	*D4	D1100	E1	IC725	P3	L1301	A4	R330	K4	R573	*M2	R730	*P2	R822	*P4	R1510	*G1	R2312	*H5	RB2102	*E5	TP1505	B1
C300	*H1	C519	K5	C738	*P2	C1106	*B1	C1530	*F2	CL117	*D4	D1101	D1	IC726	*P2			R331	P5	R574	*M2	R731	*P2	R823	*P4	R1511	*G1	R2313	*G5	RB2103	*F5	TP1506	A1
C301	*L4	C520	*M4	C739	*N3	C1107	B2	C1531	G2	CL118	D4	D1102	D1	IC727	P4	Q100	*K1	R332	P5	R575	*M2	R732	*N2	R824	*P4	R1512	*G1	R2314	*H5	RB2104	*F5		
C302	*L5	C521	M4	C740	*P3	C1108	*B2	C1532	*G1	CL119	D2	D1301	*B3	IC909	H4	Q101	*K1	R333	L2	R576	*M2	R733	*N1	R825	*P4	R1513	*G1	R2315	*H5	RB2105	*E5	X100	J4
C303	*L5	C523	*H5	C741	*P2	C1109	B2	C1700	*E5	CL120	*B3	D1500	*G2	IC910	H4	Q102	*K1	R334	M5	R577	*M3	R734	*P1	R826	*P2	R1514	*G2	R2316	*H4	RB2106	*F5	X1100	B3
C304	*L5	C524	*J5	C742	*P2	C1110	B2	C1701	*E4	CL122	B3	D1501	F1	IC911	A5	Q300	K4	R335	M5	R578	*M3	R735	*N1	R827	*P2	R1515	*F2	R2317	*H4	RB2107	*F5		
C305	*L5	C525	*H5	C743	*N3	C1111	B2	C1702	*E4	CL123	B3	D1502	F1	IC912	H3	Q303	K5	R336	M5	R579	*M3	R736	*P1	R828	*P4	R1516	*G2	R2318	H4	RB2108	*F5	*:B SIDE	
C306	*L5	C526	*J5	C744	*P3	C1112	*B2	C1703	*E5	CL124	*B4	D1503	F1	IC913	H1	Q500	*M4	R337	M5	R580	*M3	R737	*P1	R829	*P4	R1517	*G1	R2319	*G4	RB2109	*F5		
C307	*J5	C527	*J5	C745	*N3	C1113	B1	C1704	*E5	CL125	B3	D2300	*H5	IC914	H1	Q700	N2	R338	M5	R581	*N3	R738	*N1	R830	*P4	R1518	*G1	R2320	*H4	RB2110	*F5		
C308	*J5	C528	*J5	C746	*P3	C1114	*B2	C1705	*E5	CL126	*B4	D2301	*H5	IC915	H2	Q701	P2	R339	N5	R582	*N3	R739	*N2	R831	*P4	R1519	*G2	R2321	*H4	RB2111	*E5		
C309	*J4	C529	*M4	C747	*N4	C1115	*B1	C2100	*C5	CL127	B4			IC1100	B3	Q900	H5	R340	*L4	R583	*M3	R740	*P2	R832	N5	R1520	*G2	R2322	*H4	RB2112	*F5		
C310	*J4	C530	*N4	C748	*P4	C1116	C2	C2101	*E5	CL128	B4	E300	K5	IC1102	E4	Q901	H5	R341	*K4	R584	*M3	R741	*P2	R833	N5	R1521	*G2	R2323	*G4	RB2113	*F5		
C311	*J4	C531	*M4	C749	N4	C1117	C1	C2102	*F5	CL129	B3	E500	N2	IC1103	D2	Q902	J5	R342	K4	R585	*N3	R742	*P2	R834	*P4	R1522	*G1	R2324	*H4	RB2114	*E5		
C312	*J5	C534	N2	C750	N5	C1118	C1	C2103	*F5	CL130	B3	E700	N5	IC1106	C3	Q903	J5	R343	*M5	R586	*M3	R743	*P2	R835	*P4	R1523	*G1	R2325	*G4	RB2115	*F5		
C313	*J4	C535	N2	C751	*N5	C1119	*C1	C2104	*E5	CL131	*C4	E1300	A2	IC1107	E3	Q1100	*E1	R344	*M5	R587	*N3	R744	*N3	R836	*N4	R1524	*G1	R2326	*G4	RB2116	*F5		
C314	*J4	C536	M4	C752	N5	C1120	*E2	C2105	*F5	CL132	C4	E1500	H2	IC1108	E3	Q1101	*D1	R345	*H5	R588	N3	R745	*P3	R837	*P4	R1525	*G1	R2327	*G4	RB2117	*F5		
C315	*J4	C537	*N2	C753	N4	C1121	*E3	C2106	*F5	CL133	*C4	E2300	G3	IC1109	A3	Q1102	*D1	R346	J4	R589	*N3	R746	*P2	R900	*H1	R1526	*G2	R2328	*G4	RB2118	*F5		
C316	*J5	C538	*N2	C754	*N5	C1122	*A3	C2107	*C5	CL134	C4			IC1110	*B2	Q1500	*F1	R347	J5	R590	*N3	R747	*P2	R901	*H1	R1527	*F1	R2329	*G4	RB2119	*C5		
C317	*L5	C539	*M3	C755	N4	C1123	D2	C2108	*D5	CL135	C4	F900	B5	IC1111	B2	Q1501	*F1	R348	J5	R591	*M3	R748	*P2	R902	*H1	R1528	*G2	R2330	*G4	RB2120	*D5		
C318	K4	C540	*M2	C756	N5	C1124	D2	C2109	*C5	CL137	C4	F901	B5	IC1112	F3	Q1502	*F1	R349	J4	R592	M3	R749	*N3	R903	*H2	R1529	*B1	R2331	*G4	RB2121	*C5		
C320	*L4	C541	*M3	C757	*N5	C1300	*B4	C2110	*C5	CL138	*B4	F902	B5	IC1113	*C2	Q2300	*G4	R350	*N5	R593	*M3	R750	*P3	R904	*H5	R1530	*B1	R2332	*H4	RB2122	*D5		
C321	*K4	C542	*M2	C758	*N5	C1301	*E2	C2111	*D5	CL139	*B4	F903	A5	IC1114	C2	Q2301	*G4	R351	*N5	R594	*M3	R751	*N2	R905	*J5	R1531	*A1	R2333	*G4	RB2123	*C5		
C322	*K5	C543	*M2	C759	M4	C1302	*E2	C2112	*C5	CL140	B4			IC1115	D2	Q2302	*G4	R352	*N5	R595	*N3	R752	*N2	R906	*H5	R1532	*G2	R2334	*G4	RB2124	*C5		
C323	*L5	C546	*M2	C760	M5	C1303	*E2	C2113	*D5	CL141	B4	IC103	K3	IC1116	D2	Q2303	*G4	R353	M5	R596	*M3	R753	*P2	R907	*J5	R1533	A2	R2335	*G4	RB2125	*D5		
C324	*K4	C551	*M2	C761	P4	C1304	*H5	C2114	*B4	CL142	B4	IC104	L2	IC1300	C5			R501	*L5	R597	*M4	R754	*P2	R908	*H5	R1534	*G2	R2336	*G4	RB2126	*D5		
C326	*J5	C552	M2	C762	P4	C1305	A3	C2115	*F4	CL143	C4	IC105	L2	IC1301	E3	R100	*J3	R502	J5	R598	*N3	R755	*N5	R909	*H5	R1535	*F1	R2337	*G4	RB2127	*C5		
C327	*J4	C553	M2	C763	P4	C1306	*C4	C2120	*E4	CL2300	F4	IC106	L3	IC1302	E3	R101	*H3	R503	*K5	R599	*M3	R756	*N5	R910	*H3	R1536	*B1	R2338	*G3	RB2128	*C5		
C328	*J5	C554	M2	C764	N4	C1307	*C4	C2306	*G3	CL2301	F4	IC107	K1	IC1303	*E4	R102	J3	R504	*K5	R600	*M4	R757	N5	R911	*H3	R1537	*F1	R2339	*G4	RB2129	*C5		
C329	*J4	C555	*N3	C765	N4	C1308	*C4	C2307	*G3	CL2302	F4	IC108	J2	IC1304	E4	R103	J3	R505	*M4	R601	*N3	R758	*N5	R912	*H3	R1538	*B1	R2340	*G3	RB2130	*D5		
C330	*K5	C556	*M3	C766	P4	C1309	*B4	C2308	*G3	CL2303	F4	IC109	*J2	IC1305	E4	R104	*K1	R506	*M4	R602	*M3	R759	*N5	R913	*H4	R1539	*F1	R2341	*G3				
C331	*K4	C557	*N3	C767	*N4	C1310	*B3	C2309	*F3	CL2304	F4	IC111	*J1	IC1306	E2	R105	*K1	R507	*K5	R603	*N3	R760	*N5	R914	*H4	R1540	*A1	R2342	*G4	RV300	J1		
C332	*K5	C558	*M3	C768	*P4	C1311	*B3	C2310	H4	CL2305	F4	IC112	*L4	IC1307	E2	R106	*J3	R508	*K5	R604	*N3	R761	*N5	R915	*H4	R1700	*E5	R2343	*G4				
C333	*J5	C559	*M4	C769	*N4	C1312	*C3	C2311	G5	CL2306	F4	IC113	J2	IC1308	E2	R107	*K1	R509	*K5	R605	*M3	R762	*N5	R916	*H3	R1701	*E5	R2344	G4	S100	K1		
C334	*J4	C560	*M3	C770	*N4	C1313	*C3	C2312	H5	CL2307	F4	IC114	*K1	IC1309	E2	R108	*L1	R510	*K5	R606	*M3	R763	*N5	R917	*H4	R1702	*E5	R2345	G4	S101	P1		
C335	*J5	C561	*N3	C771	*N4	C1314	*D3	C2313	G4	CL2308	F4	IC115	L2	IC1310	E4	R109	*K2	R511	*K5	R607	*M4	R764	N5	R918	*H4	R1703	*E5	R2346	*E3	S102	K2		
C336	*J4	C562	*M3	C772	P4	C1315	*D3	C2314	G4	CL2310	F3	IC116	L2	IC1311	H5	R110	L2	R512	*K5	R608	*L4	R765	*N5	R919	*H4	R1704	*E5	R2347	*F3	S300	J1		
C337	*K5	C563	N3	C773	*P4	C1316	*D4	C2315	G4	CL2311	F3	IC117	*J2	IC1312	E4	R111	L2	R513	*J5	R609	*L4	R766	*N5	R920	*H4	R1705	*E5	R2348	E4	S900	J1		
C338	*K4	C564	M3	C774	*N4	C1317	*C4	C2316	*H4	CL2312	F3	IC300	J5	IC1500	F2	R112	*H1	R514	*J5	R610	*M3	R767	N3	R921	*H1	R1706	*E5	R2349	E3	S1100	E1		
C339	H2	C565	*M4	C775	P4	C1318	*B3	C2317	*G4	CL2313	F3	IC301	J5	IC1501	G1	R113	*H1	R515	*J5	R611	*M3	R768	P3	R922	*H1	R1707	*E5	R2350	*F3	S1101	A2		
C340	*K4	C566	*N3	C776	P4	C1319	*C3	C2318	*G4	CL2314	F3	IC302	J5	IC1502	F2	R114	M1	R516	*N4	R612	*L4	R769	*N5	R923	*J5	R1708	*E5	R2351	*F3	S1500	A1		
C341	J2	C567	*M3	C777	*P4	C1320	*C3	C2319	*G4	CL2315	F3	IC303	J5	IC1503	G2	R115	*L1	R517	*J5	R613	*M3	R770	*N5	R924	*J5	R1709	*E5	R2352	*F3	S1501	A1		
C342	*K4	C568	*N3	C778	*P4	C1321	*C3	C2320	*G4	CL2316	F3	IC304	K5	IC1504	G2	R124	L1	R518	*J5	R614	*M3	R771	*M5	R925	*H1	R1710	*E5	R2353	*F3	S1502	B1		
C343	*J3	C569	*M3	C779	*P4	C1322	*C3	C2321	*G4	CL2317	F3	IC305	P5	IC1505	G2	R125	L1	R519	K5	R615	*M3	R772	*N5	R926	*J5	R2100	*C4	R2354	*F3				
C344	*J3	C570	*N3	C780	*P4	C1323	*D3	C2322	*H4	CL2318	F3	IC306	K5	IC1506	F2	R126	*L1	R520	*J5	R616	*M3	R773	*M5	R927	*J5	R2101	*B4	R2355	G3	SL1500	G2		
C345	*J3	C571	*M3	C781	*P4	C1324	*D3	C2323	*H4	CL2319	F3	IC309	L5	IC1507	F2	R127	*L1	R521	K5	R617	*M3	R774	*N5	R928	*J5	R2102	*C4	R2356	G3				
C346	*J2	C572	*M4	C782	*P4	C1325	*D4	C2324	*H4	CL2320	F3	IC310	L4	IC1508	G2	R128	*K4	R522	*J5	R618	*M3	R775	*M5	R1100	*E1	R2103	*B4	R2357	G3	TP100	L1		
C347	*K2	C573	*M4	C783	*P4	C1326	*D4	C2325	*G4	CL2321	E3	IC312	P5	IC1509	F1	R129	L2	R523	*J5	R619	*L4	R776	*M5	R1101	*E1	R2104	*C5			TP101	L1		
C348	*K2	C574	*M4	C784	*P4	C1327	*D4	C2326	*G4	CL2322	E3	IC313	P5	IC1510	*F1	R130	*K2	R524	*J5	R620	*M4	R777	*M5	R1102	B3	R2105	*B5	RB100	J3	TP300	H1		
C349	*K3	C575	M3	C785	*P4	C1328	*B4	C2327	*G4	CL2324	E3	IC500	L5	IC1511	E2	R131	*K2	R525	*J5	R621	*M4	R778	*M5	R1103	*B3	R2107	*F5	RB101	*K1	TP301	L2		
C350	*K3	C576	M3	C786	*P4	C1329	*C4	C2328	G4	CL2325	E3	IC502	J5	IC1512	F2	R132	*K2	R526	*J5	R622	*M4	R779	N4	R1104	B3	R2108	*F5	RB102	*P1	TP302	L2		
C351	*K3	C577	*L4	C787	P4	C1330	*C4	C2329	G3	CL2326	E3	IC503	K5	IC1513	F2	R133	*K2	R527	*J5	R623	*M4	R780	N4	R1105	*E1	R2109	*F5	RB103	*L1	TP303	N1		
C352	*K4	C578	*M4	C788	P4	C1331	*B4	C2330	G4	CL2327	F4	IC504	J5	IC1514	H2	R134	*K2	R528	*H5	R624	*M4	R781	*N4	R1106	*E3	R2110	*F5	RB104	M1	TP304	L2		
C353	*J4	C579	*M2	C789	N4	C1332	A4	C2331	G4			IC505	N4	IC1515	G1	R135	*K2	R529	*J5	R625	*M4	R782	*N4	R1107	*E3	R2111	*F4	RB105	*M1	TP305	L3		
C354	*K2	C580	*M3	C790	*P2	C1333	*C4	C2332	*G3	CN7	M5	IC506	*M4	IC1700	E5	R136	*K2	R530	*H5	R626	*J5	R783	*N4	R1108	*E3	R2112	*F5	RB106	M1	TP306	L3		
C355	*J4	C581	*L3	C793	*P2	C1334	*E3	C2333	*E2	CN8	H5	IC508	N2	IC1701	E4	R137	*L2	R531	*J5	R627	J5	R784	*N5	R1109	*F3	R2113	*F5	RB107	*M1	TP308	J4		
C356	*J3	C700	*N3	C796	P2	C1335	E2	C2334	*F3	CN9	C5	IC509	M3	IC1703	E5	R138	*H1	R532	*J5	R628	*J5	R785	*N5	R1110	*F3	R2114	*G5	RB108	M1	TP309	J4		
C357	*J3	C701	*P3	C797	*P3	C1336	*E4	C2335	*F3	CN100	M1	IC510	M2	IC1704	E4	R139	J2	R533	*J5	R629	*J5	R786	*N5	R1111	D2	R2115	*F5	RB109	*M1	TP310	L3		
C358	*J3	C702	*P3	C798	*N5	C1337	*E3	C2336	*E3	CN101	K1	IC511	M2	IC1705	E5	R140	*K2	R534	*M4	R630	*N4	R787	*P4	R1112	D2	R2116	*D5	RB110	M1	TP500	N1		
C359	*J3	C703	*P3	C799	P4	C1338	*E4	C2337	*F3	CN200	H1	IC512	M2	IC1706	E5	R141	*K2	R535	*M4	R631	*M2	R788	*N4	R1113	*A2	R2117	*F5	RB111	*M1	TP501	N1		
C360	*J2	C704	*N3	C800	*N4	C1339	*E4	C2338	G5	CN702	E1	IC513	M3	IC2100	C5	R142	*K2	R536	*N2	R632	*M2	R789	*P4	R1114	*A2	R2118	*F5	RB112	M1	TP502	J5		
C361	*K2	C705	*P3	C801	P4	C1340	B3	C2339	H5	CN1100	C1	IC514	M3	IC2101	B4	R143	*J2	R537	*N3	R633	*M2	R790	*P4	R1115	*A2	R2119	*F5	RB113	*M1	TP503	J5		
C362	*K2	C706	*P3	C802	*N4	C1341	B4			CN1102	G1	IC515	N3	IC2102	E5	R144	*J2	R538	*N2	R634	*M2	R791	*P4	R1116	*A2	R2120	*F5	RB114	L1	TP504	J5		
C363	*K2	C707	*N2	C803	*P4	C1342	*B3	CL1	J3			IC516	M3	IC2103	F5	R300	*H1	R539	*N2	R700	*N3	R792	*N4	R1117	*A2	R2121	*D5	RB115	*L2	TP505	M2		
C364	*K3	C708	*P2	C900	H1	C1343	*H5	CL2	J3	D100	H3	IC517	M4	IC2104	F5	R301	*L4	R540	*N2	R701	*P3	R793	*P4	R1118	*B2	R2122	*D5	RB300	P5	TP506	M2		
C365	*K3	C709	*P3	C901	H1	C1344	*E2	CL3	J3	D101	K1	IC518	M4	IC2105	E5	R302	*L5	R541	*N3	R702	*P3	R794	*N5	R1119	*B2	R2123	*D5	RB301	*L4	TP507	M3		
C366	*K3	C710	*P3	C902	*H1	C1502	*F1	CL4	J3	D102	K1	IC519	L4	IC2106	F5	R303	*L5	R542	*N2	R703	*N3	R795	P4	R1120	*B2	R2124	*D5	RB302	*L4	TP508	M2		
C367	*K3	C711	*N3	C903	H2	C1503	*G1	CL5	J3	D103	K1	IC520	*M3	IC2107	F5	R304	*J4	R543	*N2	R704	*P3	R796	*P4	R1121	*E4	R2125	*D5	RB1100	*B3	TP509	M3		
C368	*K4	C712	*P3	C904	*J5	C1504	*G2	CL6	J3	D106	*J3	IC521	L4	IC2108	C5	R305	*L5	R544	*N2	R705	*N3	R797	*P4	R1122	*E4	R2126	*D5	RB1101	D4	TP510	M3		
C369	J3	C713	*N2	C905	H5	C1505	*G2	CL7	J1	D300	J4	IC700	N3	IC2110	D5	R306	*L5	R545	*N2	R706	*P3	R798	*N5	R1125	*A3	R2127	*D5	RB1102	D4	TP511	L4		
C370	H2	C714	*P2	C906	H5	C1506	*G1	CL22	J4	D301	*J4	IC701	P3	IC2111	C5	R307	*J4	R546	*N2	R707	*P3	R799	*N4	R1300	*H5	R2128	*C5	RB1103	D1	TP700	N3		
C371	K4	C715	*P3	C907	*H4	C1507	*G1	CL23	J4	D302	J4	IC702	P3	IC2112	C5	R308	*L5	R547	*N2	R708	*P3	R800	P4	R1301	*H5	R2129	*C5	RB1104	*C1	TP701	P3		

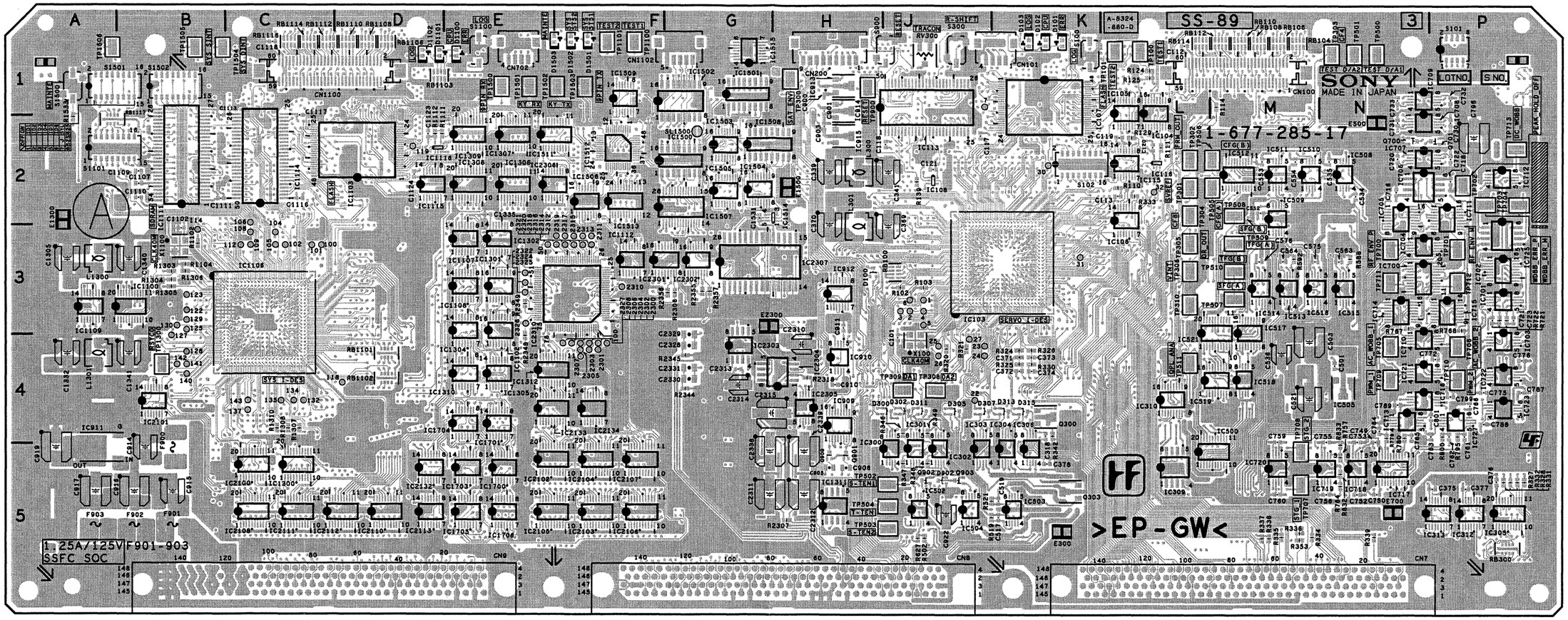

Components locations list; previous page

SS-89 -A SIDE-
SUFFIX: -17

SS-89
SUFFIX: -17

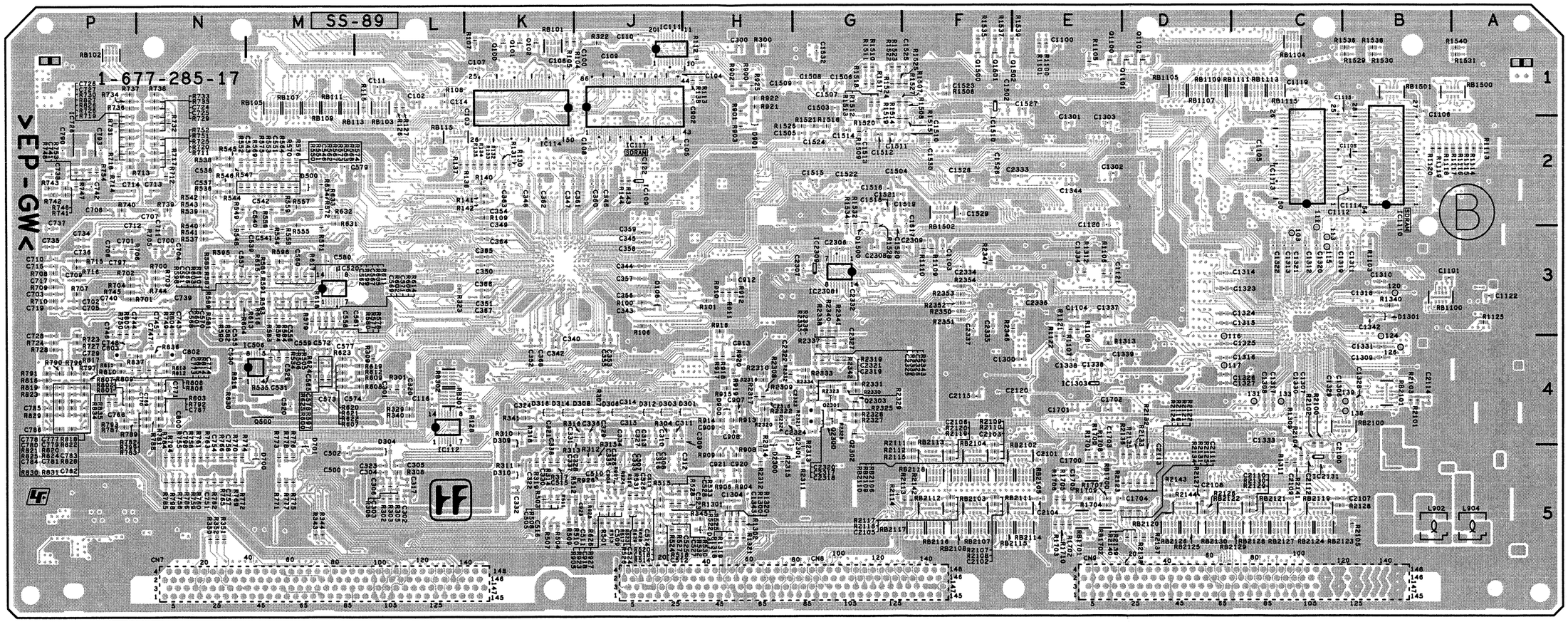

SS-89 -B SIDE-
SUFFIX: -17

SS-89 (1-677-285-16)

C100	*J1	C373	K4	C717	*P3	C909	*H4	C1509	*G1	CL22	J4	D301	*J4	IC702	P3	IC2113	D5	R304	*J4	R547	*N2	R708	*P3	R800	P4	R1305	B3	R2133	*D5	RB1108	D1	TP705	N4
C101	J4	C374	K4	C718	P2	C910	H4	C1510	*F2	CL23	J4	D302	J4	IC703	P4	IC2131	*C5	R305	*L5	R548	*N3	R709	*P3	R801	*P4	R1306	B3	R2134	*E5	RB1109	*D1	TP706	P4
C102	*L1	C375	P5	C719	*P3	C911	H3	C1511	*G2	CL24	J4	D303	*J4	IC704	N3	IC2132	D5	R306	*L5	R549	*N2	R710	*P3	R802	*P4	R1307	C4	R2135	*D5	RB1110	D1	TP707	M5
C103	*L1	C376	P5	C720	N2	C912	*H3	C1512	*G2	CL25	J4	D304	*L5	IC705	N2	IC2133	E4	R307	*J4	R550	*N2	R711	*N2	R803	*N4	R1308	C4	R2136	*D5	RB1111	*C1	TP708	M5
C104	*J1	C377	P5	C721	P3	C913	*H4	C1513	*G2	CL26	J4	D305	J4	IC706	N2	IC2134	F4	R308	*L5	R551	*M2	R712	*N2	R804	*N3	R1309	*C4	R2137	*D5	RB1112	C1	TP709	N4
C105	*J2	C378	K5	C722	P2	C914	B5	C1514	*G2	CL27	J4	D306	*J4	IC707	N2	IC2301	F3	R309	*L4	R552	*N2	R713	*P2	R805	*P3	R1310	C4	R2138	*D5	RB1113	*C1	TP710	P4
C106	*K1	C500	*M5	C723	P3	C915	B5	C1515	*G2	CL30	K2	D307	J4	IC708	N2	IC2302	G3	R310	*K4	R553	*M2	R714	*P2	R806	*N4	R1311	*C5	R2139	*D5	RB1114	C1	TP711	N3
C107	*K1	C501	N4	C724	*N1	C916	B5	C1516	*G2	CL31	K3	D308	*J4	IC709	N1	IC2303	G4	R311	*K5	R554	*M3	R715	*P3	R807	*P4	R1312	*E3	R2140	*D5	RB1115	*C1	TP712	P3
C108	*J2	C502	*M5	C725	*N2	C917	A5	C1517	*F2	CL32	L2	D309	*K4	IC710	N3	IC2304	H4	R312	*J5	R555	*M2	R716	*P3	R808	*N4	R1313	*E4	R2141	*C5	RB1116	C1	TP713	P2
C109	*J1	C503	M4	C726	*P1	C918	*J5	C1518	*G2	CL100	C3	D310	*K5	IC711	P2	IC2305	H4	R313	*K4	R556	*M2	R717	*N2	R809	*P4	R1318	*H5	R2142	*F5	RB1117	A2	TP900	H1
C110	*J1	C505	*K5	C727	*P2	C919	A5	C1519	*F2	CL101	C3	D311	J4	IC712	P2	IC2306	E2	R314	*K5	R557	*M2	R718	*P2	R810	*P4	R1319	*H5	R2143	*D5	RB1500	*A1	TP1100	F1
C111	*L1	C509	*J5	C728	*P3	C920	*H5	C1520	*G2	CL102	C3	D312	*J4	IC713	N4	IC2307	G3	R315	*J5	R558	*M3	R719	*P2	R811	*P4	R1320	*H5	R2144	*D5	RB1501	*B1	TP1101	F1
C112	L1	C510	*J5	C729	*P4	C921	*H5	C1521	*G2	CL103	*C3	D313	K4	IC714	N3	IC2308	*G3	R316	*J4	R559	*M2	R720	*N2	R812	*N4	R1321	*H5	R2306	G3	RB1502	*F2	TP1300	B4
C113	L2	C511	*J5	C730	P2	C922	J5	C1522	*G2	CL104	C3	D314	*K4	IC715	P3	IC2309	*G3	R317	*K5	R562	*M2	R721	P3	R813	*N4	R1340	*B3	R2307	H5	RB1700	*E5	TP1500	E1
C114	*L1	C512	*J5	C731	N2	C923	*J5	C1523	*F1	CL105	C3	D315	K4	IC716	N4	IC2310	F3	R318	*K4	R563	*M2	R722	P3	R814	*N4	R1506	*F1	R2308	*H4	RB1701	*E5	TP1501	E1
C115	*G1	C513	*J5	C732	P1	C1100	*E1	C1524	*G2	CL106	C2	D316	*K4	IC717	N5			R319	*K5	R564	*M2	R723	*P3	R815	*N4	R1507	*G1	R2309	*H4	RB1702	*E5	TP1502	F1
C116	*L4	C514	*J5	C733	N1	C1101	*B3	C1525	*F1	CL108	C3	D317	*H5	IC718	N5	L300	H2	R320	J4	R567	*M2	R724	*P4	R816	*P4	R1508	*F1	R2310	*H4	RB2100	*B4	TP1503	F1
C117	J2	C515	*K5	C734	*P3	C1102	B3	C1526	*F2	CL109	C3	D500	*M2	IC719	N5	L301	H3	R321	J4	R568	*M2	R725	*N2	R817	*P4	R1509	*G2	R2311	*G5	RB2101	*B4	TP1504	B1
C118	J2	C516	*K5	C735	*P3	C1103	*F3	C1527	*E1	CL111	*C3	D700	*M5	IC720	M5	L902	*B5	R322	*J1	R569	*M2	R726	*P2	R818	*P4	R1510	*G1	R2312	*H5	RB2102	*E5	TP1505	B1
C119	L2	C517	K5	C736	*P3	C1104	*E3	C1528	*F2	CL112	C3	D701	*M5	IC721	N4	L904	*A5	R323	*L3	R570	*M2	R727	*P4	R819	*P4	R1511	*G1	R2313	*G5	RB2103	*F5	TP1506	A1
C120	L2	C518	*J5	C737	*P3	C1105	*C2	C1529	*F2	CL113	*C3	D900	*H4	IC722	P4	L1300	A3	R324	K4	R571	*M3	R728	*P4	R820	*P4	R1512	*G1	R2314	*H5	RB2104	*F5		
C300	*H1	C519	K5	C738	*P2	C1106	*B1	C1530	*F2	CL114	B3	D901	*H2	IC723	P4	L1301	A4	R325	K4	R572	*M2	R729	*N2	R821	*P4	R1513	*G1	R2315	*H5	RB2105	*E5	X100	J4
C301	*L4	C520	*M4	C739	*N3	C1107	B2	C1531	G2	CL115	*C3	D902	J5	IC725	P3			R326	K4	R573	*M2	R730	*P2	R822	*P4	R1514	*G2	R2316	*H4	RB2106	*F5	X1100	B3
C302	*L5	C521	M4	C740	*P3	C1108	*B2	C1700	*E5	CL116	*D4	D1100	E1	IC726	*P2	Q100	*K1	R327	P5	R574	*M2	R731	*P2	R823	*P4	R1515	*F2	R2317	*H4	RB2107	*F5		
C303	*L5	C523	*H5	C741	*P2	C1109	B2	C1701	*E4	CL117	*D4	D1101	D1	IC727	P4	Q101	*K1	R328	P5	R575	*M2	R732	*N2	R824	*P4	R1516	*G2	R2318	H4	RB2108	*F5	*:B SIDE	
C304	*L5	C524	*J5	C742	*P2	C1110	B2	C1702	*E4	CL118	D4	D1102	D1	IC909	H4	Q102	*K1	R329	*L4	R576	*M2	R733	*N1	R825	*P4	R1517	*G1	R2319	*G4	RB2109	*F5		
C305	*L5	C525	*H5	C743	*N3	C1111	B2	C1703	*E5	CL119	D2	D1301	*B3	IC910	H4	Q300	K4	R330	K4	R577	*M3	R734	*P1	R826	*P2	R1518	*G1	R2320	*H4	RB2110	*F5		
C306	*L5	C526	*J5	C744	*P3	C1112	*B2	C1704	*E5	CL120	*B3	D1500	*G2	IC911	A5	Q303	K5	R331	P5	R578	*M3	R735	*N1	R827	*P2	R1519	*G2	R2321	*H4	RB2111	*E5		
C307	*J5	C527	*J5	C745	*N3	C1113	B1	C1705	*E5	CL122	B3	D1501	F1	IC912	H3	Q500	*M4	R332	P5	R579	*M3	R736	*P1	R828	*P4	R1520	*G2	R2322	*H4	RB2112	*F5		
C308	*J5	C528	*J5	C746	*P3	C1114	*B2	C2100	*C5	CL123	B3	D1502	F1	IC913	H1	Q700	N2	R333	L2	R580	*M3	R737	*P1	R829	*P4	R1521	*G2	R2323	*G4	RB2113	*F5		
C309	*J4	C529	*M4	C747	*N4	C1115	*B1	C2101	*E5	CL124	*B4	D1503	F1	IC914	H1	Q701	P2	R334	M5	R581	*N3	R738	*N1	R830	*P4	R1522	*G1	R2324	*H4	RB2114	*E5		
C310	*J4	C530	*N4	C748	*P4	C1116	C2	C2102	*F5	CL125	B3	D2300	*H5	IC915	H2	Q900	H5	R335	M5	R582	*N3	R739	*N2	R831	*P4	R1523	*G1	R2325	*G4	RB2115	*F5		
C311	*J4	C531	*M4	C749	N4	C1117	C1	C2103	*F5	CL126	*B4	D2301	*H5	IC1100	B3	Q901	H5	R336	M5	R583	*M3	R740	*P2	R834	*P4	R1524	*G1	R2326	*G4	RB2116	*F5		
C312	*J5	C534	N2	C750	N5	C1118	C1	C2104	*E5	CL127	B4			IC1102	E4	Q902	J5	R337	M5	R584	*M3	R741	*P2	R835	*P4	R1525	*G1	R2327	*G4	RB2117	*F5		
C313	*J4	C535	N2	C751	*N5	C1119	*C1	C2105	*F5	CL128	B4	E300	K5	IC1103	D2	Q903	J5	R338	M5	R585	*N3	R742	*P2	R836	*N4	R1526	*G2	R2328	*G4	RB2118	*F5		
C314	*J4	C536	M4	C752	N5	C1120	*E2	C2106	*F5	CL129	B3	E500	N2	IC1106	C3	Q1100	*E1	R339	N5	R586	*M3	R743	*P2	R837	*P4	R1527	*F1	R2329	*G4	RB2119	*C5		
C315	*J4	C537	*N2	C753	N4	C1121	*E3	C2107	*C5	CL130	B3	E700	N5	IC1107	E3	Q1101	*D1	R340	*L4	R587	*N3	R744	*N3	R900	*H1	R1528	*G2	R2330	*G4	RB2120	*D5		
C316	*J5	C538	*N2	C754	*N5	C1122	*A3	C2108	*D5	CL131	*C4	E1300	A2	IC1108	E3	Q1102	*D1	R341	*K4	R588	N3	R745	*P3	R901	*H1	R1529	*B1	R2331	*G4	RB2121	*C5		
C317	*L5	C539	*M3	C755	N4	C1123	D2	C2109	*C5	CL132	C4	E1500	H2	IC1109	A3	Q1500	*F1	R342	K4	R589	*N3	R746	*P2	R902	*H1	R1530	*B1	R2332	*H4	RB2122	*D5		
C318	K4	C540	*M2	C756	N5	C1124	D2	C2110	*C5	CL133	*C4	E2300	G3	IC1110	*B2	Q1501	*F1	R343	*M5	R590	*N3	R747	*P2	R903	*H2	R1531	*A1	R2333	*G4	RB2123	*C5		
C320	*L4	C541	*M3	C757	*N5	C1300	*B4	C2111	*D5	CL134	C4			IC1111	B2	Q1502	*F1	R344	*M5	R591	*M3	R748	*P2	R904	*H5	R1532	*G2	R2334	*G4	RB2124	*C5		
C321	*K4	C542	*M2	C758	*N5	C1301	*E2	C2112	*C5	CL135	C4	F900	B5	IC1112	F3	Q2300	*G4	R345	*H5	R592	M3	R749	*N3	R905	*J5	R1533	A2	R2335	*G4	RB2125	*D5		
C322	*K5	C543	*M2	C759	M4	C1302	*E2	C2113	*D5	CL137	C4	F901	B5	IC1113	*C2	Q2301	*G4	R346	J4	R593	*M3	R750	*P3	R906	*H5	R1534	*G2	R2336	*G4	RB2126	*D5		
C323	*L5	C546	*M2	C760	M5	C1303	*E2	C2114	*B4	CL138	*B4	F902	B5	IC1114	C2	Q2302	*G4	R347	J5	R594	*M3	R751	*N2	R907	*J5	R1535	*F1	R2337	*G4	RB2127	*C5		
C324	*K4	C551	*M2	C761	P4	C1304	*H5	C2115	*F4	CL139	*B4	F903	A5	IC1115	D2	Q2303	*G4	R348	J5	R595	*N3	R752	*N2	R908	*H5	R1536	*B1	R2338	*G3	RB2128	*C5		
C326	*J5	C552	M2	C762	P4	C1305	A3	C2120	*E4	CL140	B4			IC1116	D2			R349	J4	R596	*M3	R753	*P2	R909	*H5	R1537	*F1	R2339	*G4	RB2129	*C5		
C327	*J4	C553	M2	C763	P4	C1306	*C4	C2306	*G3	CL141	B4	IC103	K3	IC1300	C5	R100	*J3	R501	*J5	R597	*M4	R754	*P2	R910	*H3	R1538	*B1	R2340	*G3	RB2130	*D5		
C328	*J5	C554	M2	C764	N4	C1307	*C4	C2307	*G3	CL142	B4	IC104	L2	IC1301	E3	R101	*H3	R502	J5	R598	*N3	R755	*N5	R911	*H3	R1539	*P1	R2341	*G3				
C329	*J4	C555	*N3	C765	N4	C1308	*C4	C2308	*G3	CL143	C4	IC105	L2	IC1302	E3	R102	J3	R503	*K5	R599	*M3	R756	*N5	R912	*H3	R1540	*A1	R2342	*G4	RV300	J1		
C330	*K5	C556	*M3	C766	P4	C1309	*B4	C2309	*F3	CL2300	F4	IC106	L3	IC1303	*E4	R103	J3	R504	*K5	R600	*M4	R757	N5	R913	*H4	R1700	*E5	R2343	*G4				
C331	*K4	C557	*N3	C767	*N4	C1310	*B3	C2310	H4	CL2301	F4	IC107	K1	IC1304	E4	R104	*K1	R505	*M4	R601	*N3	R758	*N5	R914	*H4	R1701	*E5	R2344	G5	S100	K1		
C332	*K5	C558	*M3	C768	*P4	C1311	*B3	C2311	G5	CL2302	F4	IC110	G1	IC1305	E4	R105	*K1	R506	*M4	R602	*M3	R759	*N5	R915	*H4	R1702	*E5	R2345	F4	S101	P1		
C333	*J5	C559	*M4	C769	*N4	C1312	*C3	C2312	H5	CL2303	F4	IC111	*J1	IC1306	E2	R106	*J3	R507	*K5	R603	*N3	R760	*N5	R916	*H3	R1703	*E5	R2346	*E3	S102	K2		
C334	*J4	C560	*M3	C770	*N4	C1313	*C3	C2313	G4	CL2304	F4	IC112	*L4	IC1307	E2	R107	*K1	R508	*K5	R604	*N3	R761	*N5	R917	*H4	R1704	*E5	R2347	*F3	S300	J1		
C335	*J5	C561	*N3	C771	*N4	C1314	*D3	C2314	G4	CL2305	F4	IC113	J2	IC1308	E2	R108	*L1	R509	*K5	R605	*M3	R762	*N5	R918	*H4	R1705	*E5	R2348	E4	S900	J1		
C336	*J4	C562	*M3	C772	P4	C1315	*D3	C2315	G4	CL2306	F4	IC114	*K1	IC1309	E2	R109	*K2	R510	*K5	R606	*M3	R763	*N5	R919	*H4	R1706	*E5	R2349	E3	S1100	E1		
C337	*K5	C563	N3	C773	*P4	C1316	*D4	C2316	*H4	CL2307	F4	IC115	L2	IC1310	E4	R110	L2	R511	*K5	R607	*M4	R764	N5	R920	*H4	R1707	*E5	R2350	*F3	S1101	A2		
C338	*K4	C564	M3	C774	*N4	C1317	*C4	C2317	*G4	CL2308	F4	IC116	L2	IC1311	H5	R111	L2	R512	*K5	R608	*L4	R765	*N5	R921	*H1	R1708	*E5	R2351	*F3	S1500	A1		
C339	H2	C565	*M4	C775	P4	C1318	*B3	C2318	*G4	CL2310	F3	IC117	*J2	IC1312	E4	R112	*H1	R513	*J5	R609	*L4	R766	*N5	R922	*H1	R1709	*E5	R2352	*F3	S1501	A1		
C340	*K4	C566	*N3	C776	P4	C1319	*C3	C2319	*G4	CL2311	F3	IC300	J5	IC1500	F2	R113	*H1	R514	*J5	R610	*M3	R767	N3	R923	*J5	R1710	*E5	R2353	*F3	S1502	B1		
C341	J2	C567	*M3	C777	*P4	C1320	*C3	C2320	*G4	CL2312	F3	IC301	J5	IC1501	G1	R114	M1	R515	*J5	R611	*M3	R768	P3	R924	*J5	R2100	*C4	R2354	*F3				
C342	*K4	C568	*N3	C778	*P4	C1321	*C3	C2321	*G4	CL2313	F3	IC302	J5	IC1502	F2	R115	*L1	R516	*N4	R612	*L4	R769	*N5	R925	*H1	R2101	*B4	R2355	G3	SL1500	G2		
C343	*J3	C569	*M3	C779	*P4	C1322	*C3	C2322	*H4	CL2314	F3	IC303	J5	IC1503	G2	R116	H1	R517	*J5	R613	*M3	R770	*N5	R926	*J5	R2102	*C4	R2356	G3				
C344	*J3	C570	*N3	C780	*P4	C1323	*D3	C2323	*H4	CL2315	F3	IC304	K5	IC1504	G2	R117	H1	R518	*J5	R614	*M3	R771	*M5	R927	*J5	R2103	*B4	R2357	G3	TP100	L1		
C345	*J3	C571	*M3	C781	*P4	C1324	*D3	C2324	*H4	CL2316	F3	IC305	P5	IC1505	G2	R118	H1	R519	K5	R615	*M3	R772	*N5	R928	*J5	R2104	*C5			TP101	L1		
C346	*J2	C572	*M4	C782	*P4	C1325	*D4	C2325	*G4	CL2317	F3	IC306	K5	IC1506	F2	R119	H1	R520	*J5	R616	*M3	R773	*M5	R1100	*E1	R2105	*B5	RB100	J3	TP300	H1		
C347	*K2	C573	*M4	C783	*P4	C1326	*D4	C2326	*G4	CL2318	F3	IC309	L5	IC1507	F2	R120	G1	R521	K5	R617	*M3	R774	*N5	R1101	*E1	R2107	*F5	RB101	*K1	TP301	L2		
C348	*K2	C574	*M4	C784	*P4	C1327	*D4	C2327	*G4	CL2319	F3	IC310	L4	IC1508	G2	R121	G1	R522	*J5	R618	*M3	R775	*M5	R1102	B3	R2108	*F5	RB102	*P1	TP302	L2		
C349	*K3	C575	M3	C785	*P4	C1328	*B4	C2328	G4	CL2320	F3	IC312	P5	IC1509	F1	R122	G1	R523	*J5	R619	*L4	R776	*M5	R1103	*B3	R2109	*F5	RB103	*L1	TP303	N1		
C350	*K3	C576	M3	C786	*P4	C1329	*C4	C2329	F4	CL2321	E3	IC313	P5	IC1510	*F1	R123	G1	R524	*J5	R620	*M4	R777	*M5	R1104	B3	R2110	*F5	RB104	M1	TP304	L2		
C351	*K3	C577	*L4	C787	P4	C1330	*C4	C2330	G4	CL2322	E3	IC500	L5	IC1511	E2	R124	L1	R525	*J5	R621	*M4	R778	*M5	R1105	*E1	R2111	*F4	RB105	*M1	TP305	L3		
C352	*K4	C578	*M4	C788	P4	C1331	*B4	C2331	G4	CL2324	E3	IC502	J5	IC1512	F2	R125	L1	R526	*J5	R622	*M4	R779	N4	R1106	*E3	R2112	*F5	RB106	M1	TP306	L3		
C353	*J4	C579	*M2	C789	N4	C1332	A4	C2332	*G3	CL2325	E3	IC503	K5	IC1513	F2	R126	*L1	R527	*J5	R623	*M4	R780	N4	R1107	*E3	R2113	*F5	RB107	*M1	TP308	J4		
C354	*K2	C580	*M3	C790	*P2	C1333	*C4	C2333	*E2	CL2326	E3	IC504	J5	IC1514	H2	R127	*L1	R528	*H5	R624	*M4	R781	*N4	R1108	*E3	R2114	*G5	RB108	M1	TP309	J4		
C355	*J4	C581	*L3	C793	*P2	C1334	*E3	C2334	*F3	CL2327	F4	IC505	N4	IC1700	E5	R128	*K4	R529	*J5	R625	*M4	R782	*N4	R1109	*F3	R2115	*F5	RB109	*M1	TP310	L3		
C356	*J3	C700	*N3	C796	P2	C1335	E2	C2335	*F3			IC506	*M4	IC1701	E4	R129	L2	R530	*H5	R626	*J5	R783	*N4	R1110	*F3	R2116	*D5	RB110	M1	TP500	N1		
C357	*J3	C701	*P3	C797	*P3	C1336	*E4	C2336	*E3	CN7	M5	IC508	N2	IC1703	E5	R130	*K2	R531	*J5	R627	J5	R784	*N5	R1111	D2	R2117	*F5	RB111	*M1	TP501	N1		
C358	*J3	C702	*P3	C798	*N5	C1337	*E3	C2337	*F3	CN8	H5	IC509	M3	IC1704	E4	R131	*K2	R532	*J5	R628	*J5	R785	*N5	R1112	D2	R2118	*F5	RB112	M1	TP502	J5		
C359	*J3	C703	*P3	C799	P4	C1338	*E4	C2338	G5	CN9	C5	IC510	M2	IC1705	E5	R132	*K2	R533	*J5	R629	*J5	R786	*N5	R1113	*A2	R2119	*F5	RB113	*M1	TP503	J5		
C360	*J2	C704	*N3	C800	*N4	C1339	*E4	C2339	H5	CN100	M1	IC511	M2	IC1706	E5	R133	*K2	R534	*M4	R630	*N4	R787	*P4	R1114	*A2	R2120	*F5	RB114	L1	TP504	J5		
C361	*K2	C705	*P3	C801	P4	C1340	B3	C2340	G4	CN101	K1	IC512	M2	IC2100	C5	R134	*K2	R535	*M4	R631	*M2	R788	*N4	R1115	*A2	R2121	*D5	RB115	*L2	TP505	M2		
C362	*K2	C706	*P3	C802	*N4	C1341	B4	C2341	F4	CN200	H1	IC513	M3	IC2101	B4	R135	*K2	R536	*N2	R632	*M2	R789	*P4	R1116	*A2	R2122	*D5	RB300	P5	TP506	M2		
C363	*K2	C707	*N2	C803	*P4	C1342	*B3	C2342	G5	CN702	E1	IC514	M3	IC2102	E5	R136	*K2	R537	*N3	R633	*M2	R790	*P4	R1117	*A2	R2123	*D5	RB301	*L4	TP507	M3		
C364	*K3	C708	*P2	C900	H1	C1343	*H5	C2343	G5	CN1100	C1	IC515	N3	IC2103	F5	R137	*L2	R538	*N2	R634	*M2	R791	*P4	R1118	*B2	R2124	*D5	RB302	*L4	TP508	M2		
C365	*K3	C709	*P3	C901	H1	C1344	*E2			CN1102	G1	IC516	M3	IC2104	F5	R138	*H1	R539	*N2	R700	*N3	R792	*N4	R1119	*B2	R2125	*D5	RB1100	*B3	TP509	M3		
C366	*K3	C710	*P3	C902	*H1	C1502	*F1	CL1	J3			IC517	M4	IC2105	E5	R140	*K2	R540	*N2	R701	*P3	R793	*P4	R1120	*B2	R2126	*D5	RB1101	D4	TP510	M3		
C367	*K3	C711	*N3	C903	H2	C1503	*G1	CL2	J3	D100	H3	IC518	M4	IC2106	F5	R141	*K2	R541	*N3	R702	*P3	R794	*N5	R1125	*A3	R2127	*D5	RB1102	D4	TP511	L4		
C368	*K4	C712	*P3	C904	*J5	C1504	*G2	CL3	J3	D101	K1	IC519	L4	IC2107	F5	R142	*K2	R542	*N2	R703	*N3	R795	P4	R1300	*H5	R2128	*C5	RB1103	D1	TP700	N3		
C369	J3	C713	*N2	C905	H5	C1505	*G2	CL4	J3	D102	K1	IC520	*M3	IC2108	C5	R300	*H1	R543	*N2	R704	*P3	R796	*P4	R1301	*H5	R2129	*C5	RB1104	*C1	TP701	P3		
C370	H2	C714	*P2	C906	H5	C1506	*G1	CL5	J3	D103	K1	IC521	L4	IC2110	D5	R301	*L4	R544	*N2	R705	*N3	R797	*P4	R1302	*H5	R2130	*C5	RB1105	*D1	TP702	P2		
C371	K4	C715	*P3	C907	*H4	C1507	*G1	CL6	J3	D106	*J3	IC700	N3	IC2111	C5	R302	*L5	R545	*N2	R706	*P3	R798	*N5	R1303	B3	R2131	*D5	RB1106	D1	TP703	P2		
C372	K4	C716	N2	C908	*H4	C1508	*G1	CL7	J1	D300	J4	IC701	P3	IC2112	C5	R303	*L5	R546	*N2	R707	*P3	R799	*N4	R1304	B3	R2132	*D5	RB1107	*D1	TP704	P2		

SS-89
SUFFIX: -16

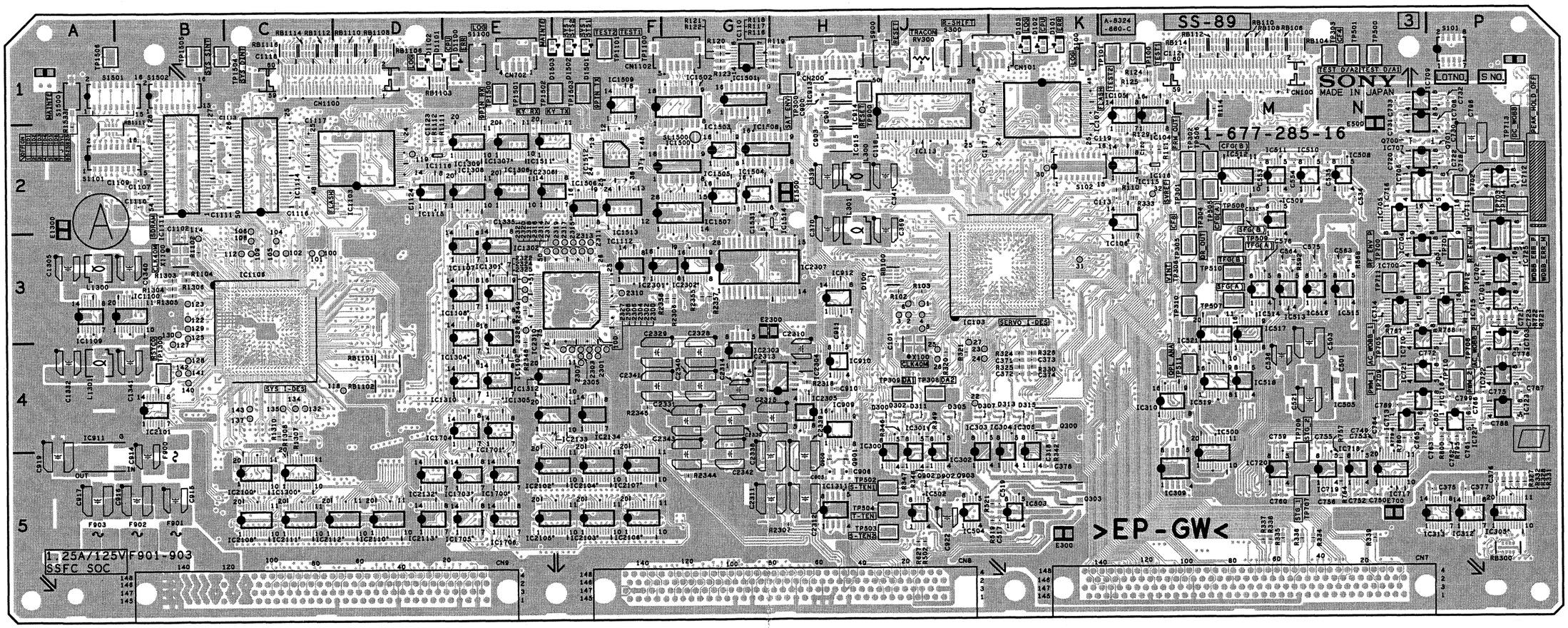

SS-89
SUFFIX: -16

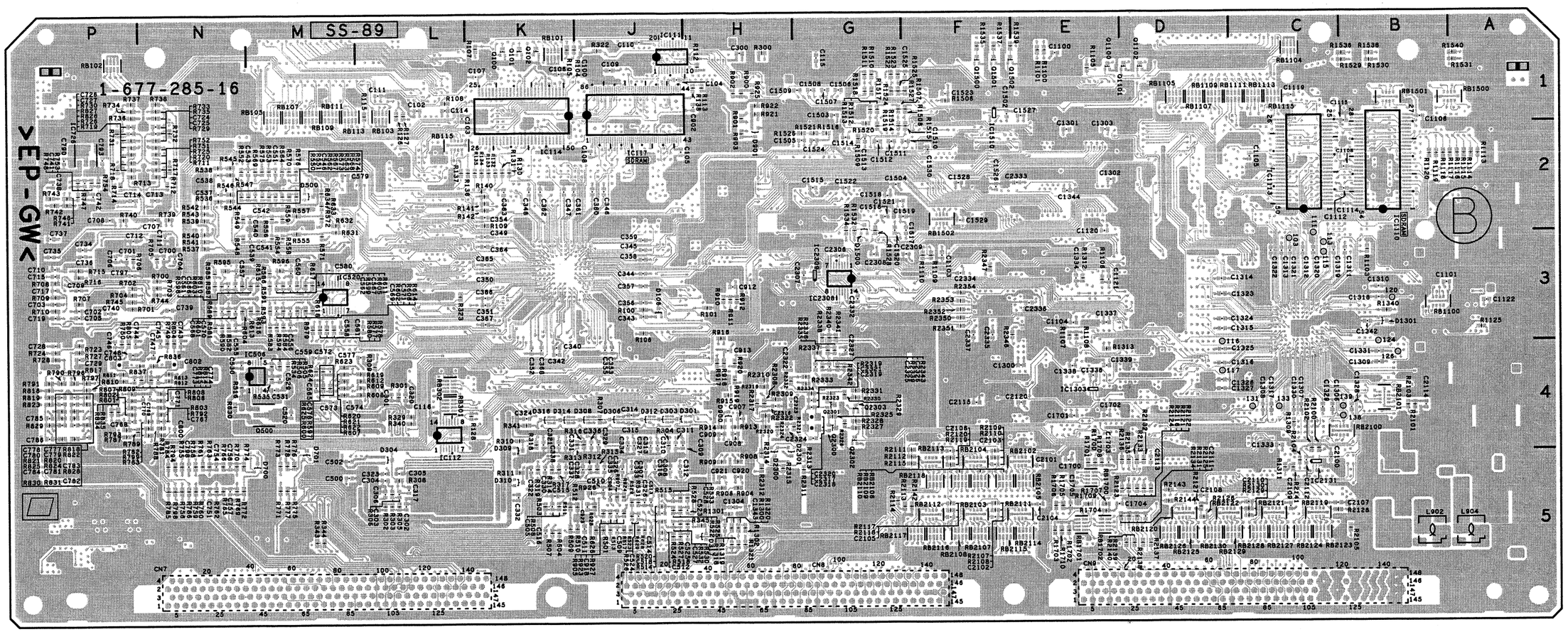

SS-89 -B SIDE-
SUFFIX: -16

4-63 (a)

VN-13 (1-687-221-13)

C1	*E1	C327	A3	C652	*H5	CL1	D3	E302	A1	R4	*D1	R313	A3	R641	*G2	R776	*F2	RB415	K4
C2	E1	C328	J4	C653	H5	CL2	*D3	E303	C4	R5	D2	R314	D5	R642	*H3	R777	*F2	RB416	*K4
C3	E1	C329	A3	C654	*G4	CL3	D3	E304	D1	R6	D2	R315	C5	R643	F4	R778	*E2	RB417	*K4
C4	*D1	C331	D5	C655	*G4	CL4	*D3	E401	E5	R7	*C3	R316	C5	R644	*F4	R779	*E2	RB418	K4
C6	*A2	C336	C5	C656	*G4	CL5	D4	E402	N5	R8	*C3	R317	*D5	R645	*F4	R780	*E2	RB419	*K3
C7	*E2	C340	*D5	C657	*G4	CL6	*E5	E405	P1	R9	*D2	R318	*D5	R646	F4	R781	*E2	RB424	*J2
C8	*B4	C401	*H2	C658	*G4	CL7	*E5	E406	B4	R10	D2	R319	*D5	R647	F4	R782	*E2	RB425	*J2
C9	*B3	C402	H2	C659	*G5	CL8	*E5	E651	F5	R11	*C3	R320	*D5	R648	F4	R783	*F2	RB426	*J2
C10	*B4	C403	*G2	C662	*H4	CL9	*E4	E652	K5	R12	*D3	R321	J3	R649	F4	R784	*F2	RB427	J2
C11	*B3	C404	*G2	C663	*H5	CL10	*E4	E653	K2	R13	*C3	R322	A4	R650	*F4	R785	*F2	RB428	*J2
C12	*B4	C405	G2	C664	*H4	CL11	E5			R14	*D2	R323	J3	R651	*F4	R786	*F2	RB429	*K4
C13	*B3	C406	G2	C665	*H4	CL12	E4	F301	*A5	R15	*C2	R324	J3	R652	*F4	R787	*F2	RB430	K3
C14	*B4	C407	*H5	C666	*H4	CL13	E5	F302	*A5	R16	*C2	R325	A3	R653	*F4	R788	*E2	RB431	*K3
C15	*B3	C408	*L5	C667	*G4	CL14	*E5	F303	*B5	R17	*C3	R326	A4	R654	F4	R789	*E2	RB432	K3
C16	D3	C409	*L5	C668	*G5	CL15	E5			R18	*C3	R327	D5	R655	J5	R790	*E2	RB433	K4
C17	D2	C411	G5	C669	*H4	CL16	*E5	IC1	C3	R19	*C2	R328	J4	R656	J5	R791	F1	RB434	K4
C18	*C3	C412	*J2	C670	*H5	CL101	*B5	IC2	D4	R20	*C2	R329	A3	R657	H4	R792	F1	RB436	K4
C19	*C3	C413	L4	C671	*G5	CL102	*B5	IC4	*B2	R21	*C3	R330	A3	R663	*H5	R793	F1	RB437	*K3
C20	*C3	C414	L5	C672	*G5	CL103	*C5	IC6	E2	R22	*C3	R331	J4	R664	F5	R794	*E3	RB444	*K3
C21	*C3	C415	K5	C673	*H5	CL104	*C5	IC7	*B3	R23	*D3	R332	A3	R666	*H5	R795	F3	RB445	*L3
C22	*D3	C416	*J5	C674	*H5	CL105	*B2	IC8	*B4	R27	*C2	R335	D5	R667	*H5	R796	*E3	RB446	*K4
C23	*D3	C417	*K5	C675	*H5	CL106	A2	IC9	B3	R28	*D3	R341	J3	R705	E3	R797	*H5	RB447	*L3
C24	*C2	C418	*K5	C676	*H5	CL110	*B5	IC10	B4	R29	*D3	R342	A4	R706	F4			RB503	*P5
C25	*C2	C419	K5	C677	*G4	CL111	*C5	IC11	E1	R30	*D3	R401	H2	R707	*F3	RB17	C2	RB504	P5
C27	*D2	C420	J5	C678	*G4	CL113	*B5	IC12	*D5	R31	*D3	R402	G5	R708	E3	RB18	C2	RB505	P5
C28	*D2	C421	J4	C679	*G4	CL301	J3	IC13	D1	R32	*D3	R403	G5	R709	*F3	RB19	*C2	RB506	*P5
C29	*D2	C422	K4	C680	*G4	CL302	A3	IC101	C5	R33	*C3	R404	G5	R710	F3	RB20	*C2	RB507	P5
C30	*D3	C423	*J5	C681	*H4	CL411	*K5	IC102	C5	R34	*D2	R405	*K5	R711	F3	RB21	*C3	RB508	*P5
C31	D2	C426	*K2	C682	*H4	CL412	*K5	IC103	*C5	R35	*D3	R408	*K3	R712	F3	RB22	*C3	RB509	P5
C32	*C2	C427	*L3	C683	*H4	CL413	*K4	IC104	*B1	R36	*D3	R413	*J5	R713	F3	RB23	C3	RB510	*P5
C33	*C3	C428	*L4	C684	*H4	CL414	K5	IC105	A1	R37	*C3	R414	*J5	R714	F3	RB24	C3	RB511	*N5
C34	*D3	C429	*K4	C690	*H5	CL415	*K4	IC106	*D3	R38	*D3	R416	*K3	R715	F3	RB25	D2	RB512	N5
C35	*D2	C430	*L3	C691	*H3	CL416	J5	IC107	E3	R39	*D3	R418	*H2	R716	F3	RB26	C2	RB513	*N5
C36	*D5	C431	*K3	C692	*H3	CL418	*L3	IC108	*K1	R40	*D2	R424	L3	R717	F4	RB27	*C2	RB514	N5
C38	*D5	C432	*K3	C693	*H4	CL419	*K4	IC109	C5	R42	*C3	R425	K5	R718	*F4	RB28	*D2	RB515	N5
C39	*D5	C433	*K3	C694	*H4	CL423	*L3	IC110	*C1	R43	*D3	R426	K5	R719	*F4	RB29	*D3	RB601	*H4
C40	*D4	C434	*L3	C695	*G4	CL424	*J2	IC301	A4	R44	*D3	R427	K5	R720	*F4	RB30	*C3	RB602	H4
C41	*D4	C435	*K3	C696	*G4	CL425	*K4	IC302	J4	R45	*D3	R429	*L4	R721	F4	RB31	C3	RB603	*H4
C42	*D5	C436	*K3	C697	*G4	CL426	*K4	IC303	A3	R46	*C3	R430	*K4	R722	F4	RB32	D3	RB604	H4
C43	*E4	C437	*L3	C698	*H4	CL427	*L3	IC306	*D5	R47	*C3	R431	*K3	R723	F4	RB34	D5	RB605	H4
C44	*E4	C438	*L4	C699	*G4	CL428	*K3	IC307	C5	R48	*D3	R432	*K4	R724	E3	RB36	*D4	RB606	*H4
C45	*D4	C439	*L3	C700	*G4	CL429	*K3	IC401	*H2	R49	*D3	R434	*K4	R725	*E4	RB37	*D4	RB651	*G5
C46	*E5	C440	*K3	C701	E3	CL431	*L3	IC402	H2	R50	*D3	R455	*L3	R726	E4	RB38	*D4	RB652	*G5
C47	*D4	C441	*K3	C702	*F3	CL432	*L3	IC403	*G2	R51	*D3	R456	*K4	R727	*E4	RB39	*D4	RB653	*G5
C48	*D4	C442	*K3	C703	*F3	CL433	*J2	IC404	*H2	R52	*D3	R457	*K4	R728	E4	RB40	*D4	RB654	*G5
C101	C4	C446	K5	C704	*F3	CL434	*J2	IC405	G2	R53	*D2	R458	*K4	R729	E4	RB41	*E4	RB655	*G4
C102	*C5	C447	*K2	C705	F1	CL435	*J2	IC406	H2	R54	*D2	R459	K5	R730	*E4	RB42	*E4	RB656	*G4
C103	*D5	C601	*J4	C706	*F2	CL501	N5	IC407	*F5	R55	*D2	R460	K5	R731	E4	RB43	*E4	RB657	*G4
C104	B5	C602	*J5	C707	*F2	CL601	J4	IC408	H5	R56	*D3	R461	*J5	R732	*E4	RB44	*E4	RB658	*G4
C105	C5	C603	J4	C708	*F2	CL602	J4	IC409	*L5	R57	*D5	R502	*P4	R733	*F4	RB45	*E4	RB659	F4
C106	*C5	C604	*H3	C709	*E2	CL603	J4	IC410	*L5	R58	*D5	R503	*P4	R734	*F4	RB46	*E5	RB660	F5
C107	*C5	C605	J3	C710	*E2	CL604	J4	IC412	K3	R61	*D4	R504	*P4	R735	*E3	RB47	*E5	RB661	F4
C108	*C5	C606	*J3	C711	E2	CL605	J5	IC413	K5	R62	*D4	R601	*J4	R736	*E2	RB48	*E5	RB662	F4
C109	C5	C607	J2	C712	F2	CL606	J5	IC414	J2	R63	*D4	R602	*J5	R737	*E2	RB101	C5		
C110	C5	C608	*J3	C713	*F2	CL607	J5	IC415	*K5	R64	D5	R603	J2	R738	*E3	RB102	*D5	S101	B1
C111	C5	C609	H3	C714	*F3	CL608	J3	IC416	L2	R65	*E5	R604	J2	R739	E3	RB103	C5	S102	A1
C112	C5	C610	*H2	C715	*F3	CL609	H3	IC420	K5	R66	*D5	R605	J2	R740	*E3	RB104	B5	S104	J1
C113	C5	C611	H3	C716	*F3	CL610	H3	IC601	G4	R67	*D2	R606	H3	R741	E3	RB105	C5	S105	E1
C114	B2	C612	*J3	C717	*E3	CL651	H5	IC602	*J5	R101	C5	R607	*J3	R742	E3	RB106	C5		
C115	B2	C613	J3	C718	*E3	CL701	F3	IC603	J4	R102	C5	R608	J3	R743	E3	RB107	C5	TP101	B1
C116	*E3	C614	*J2	C719	*F3	CL702	F3	IC604	*H3	R103	C5	R609	*H3	R744	E3	RB108	C5	TP102	B1
C117	*D3	C615	J3	C720	*F3	CL703	F3	IC605	J3	R104	C5	R610	*H2	R745	*P1	RB109	*B1	TP401	M3
C118	*D3	C616	*J3	C721	*E3	CL704	F4	IC606	*J3	R105	*C5	R611	*H2	R746	*P1	RB110	*C5	TP402	F5
C119	*K1	C617	J3	C722	*E3	CL705	F4	IC607	J3	R106	*A1	R612	*H2	R747	*P1	RB111	*B1	TP403	F5
C120	B5	C618	J2	C723	E3	CL706	F4	IC608	*F3	R107	*A1	R613	J3	R748	*P1	RB112	*K1	TP404	F5
C121	*C1	C619	*J3	C724	*F3	CL707	F3	IC609	G3	R108	*E1	R614	J2	R749	*P1	RB113	*A2	TP601	J5
C301	B5	C620	*F3	C725	*E3	CL708	F3	IC610	*G3	R109	*E1	R615	J2	R750	*P1	RB114	*A2	TP602	J4
C302	*B5	C621	F3	C726	*E3			IC611	H3	R110	*E1	R616	J2	R751	*E3	RB115	B2	TP651	H5
C303	A5	C622	*G3	C727	*F3	CN1	D1	IC612	*F5	R111	*B2	R617	*J3	R752	*E3	RB116	B2		
C304	A5	C623	G3	C728	*F3	CN5	H1	IC613	F5	R112	*A1	R618	*J2	R753	*E3	RB117	*E3	X1	E1
C305	*A5	C624	*G3	C729	*F3	CN6	P3	IC614	*J4	R113	*C5	R619	*J2	R754	*E3	RB118	*E3	X651	H5
C306	*A5	C625	G2	C730	*F3	CN22	M5	IC701	F3	R114	*K1	R620	*J2	R755	*F2	RB119	*E3	X701	F3
C307	*B5	C626	*F2	C731	*F3	CN23	H5	IC702	F2	R115	*K1	R621	*J3	R756	*F2	RB120	*D3		
C308	A5	C627	F3	C732	*H5	CN24	C5			R116	*K1	R622	J3	R757	*F2	RB121	E3	*:B SIDE	
C309	B5	C628	*G2	C733	*G3	CN101	K1	L101	C5	R117	*C5	R623	F3	R758	*F2	RB122	D3		
C310	*B4	C629	G3	C734	*G3	CN102	C1	L102	B5	R118	*C5	R624	*G3	R759	*F2	RB123	E3		
C311	B4	C630	*H3	C735	*G4	CN110	M1	L301	A5	R119	*C5	R625	G3	R760	*E2	RB124	E3		
C312	J3	C631	G3	C736	*G4	CN501	N5	L302	B5	R120	C5	R626	G2	R761	*E2	RB301	D5		
C313	A4	C632	*H3	C737	*G4	CN701	F2	L303	J4	R121	C5	R627	G2	R762	*E2	RB401	F5		
C314	J3	C633	H3	C738	*G4	CN702	F1	L304	A3	R122	*C1	R628	G2	R763	*F2	RB402	J5		
C315	A4	C634	H2	C739	*G4			L401	H2	R301	B5	R629	*F3	R764	*F2	RB403	L5		
C316	J3	C635	*G3	C740	*G4	D102	E1	L402	G2	R302	B5	R630	*F2	R765	*F2	RB404	L5		
C317	A3	C636	*F5	C741	*H4	D103	E1	L403	G2	R303	*A4	R631	*F2	R766	*F2	RB405	K3		
C318	J4	C637	F5	C742	*H4	D104	E1	L651	H5	R304	*A4	R632	*F2	R767	*F2	RB406	J5		
C319	A3	C638	*F4	C743	*H4	D701	P1			R305	*A4	R633	H3	R768	*E2	RB407	L5		
C320	J4	C639	F4	C744	*H4	D702	P1	Q301	B5	R306	B5	R634	H2	R769	*E2	RB408	K5		
C321	A3	C640	*F4	C745	*H4	D703	P1	Q302	*B5	R307	B4	R635	H2	R770	*E2	RB409	H5		
C322	J4	C641	F4	C746	*H3	D704	P1	Q303	D5	R308	J3	R636	H2	R771	*E2	RB410	*J2		
C323	A3	C642	*F5	C747	*G5	D705	P1			R309	A3	R637	G3	R772	*E2	RB411	*G5		
C324	J4	C643	F5	C748	*H4	D706	P1	R1	E1	R310	J3	R638	*G3	R773	*F2	RB412	*G5		
C325	A3	C644	*J4	C749	*G5			R2	*D1	R311	A3	R639	*G2	R774	*F2	RB413	*L3		
C326	J4	C651	*H5	C750	*H3	E301	F2	R3	*D1	R312	J3	R640	*G2	R775	*F2	RB414	K4		

VN-13
SUFFIX: -13

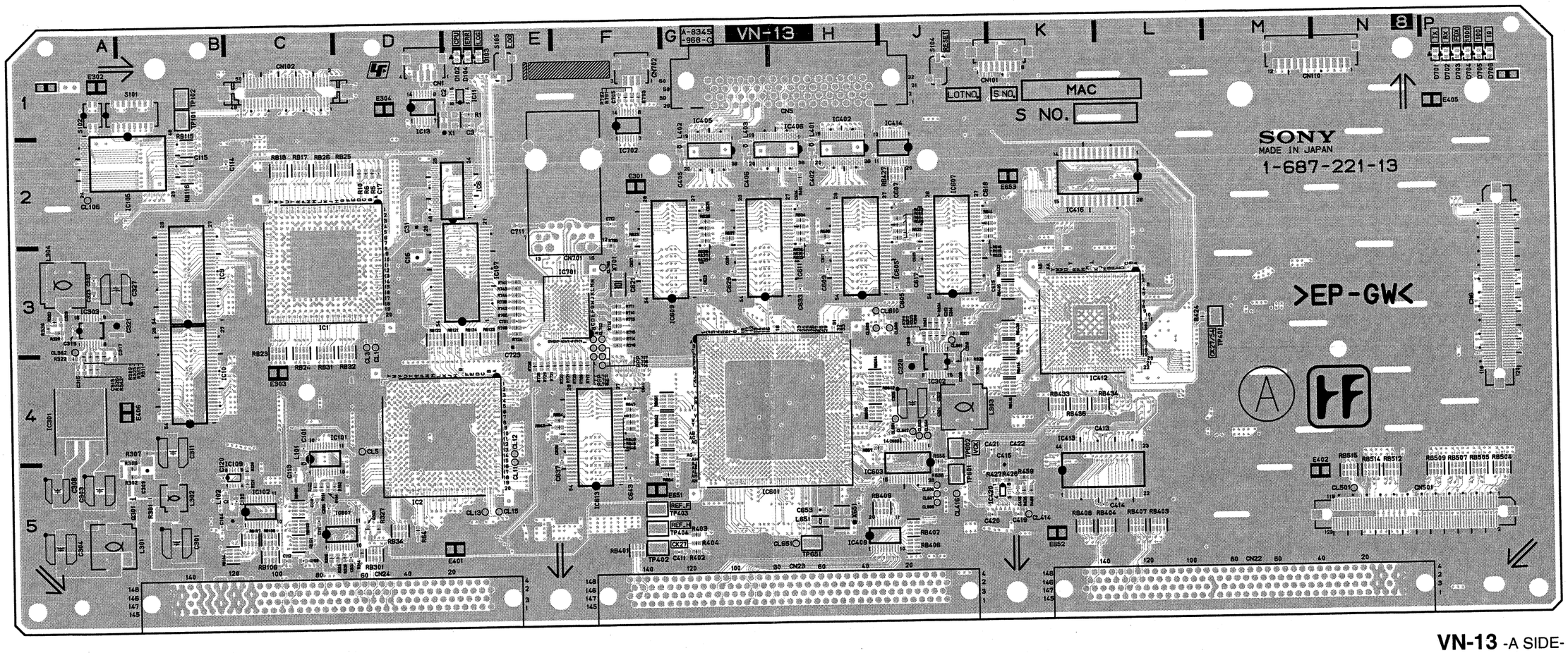

VN-13 -A SIDE-
SUFFIX: -13

Components locations list; previous page

4-66 (c)

VN-13
SUFFIX: -13

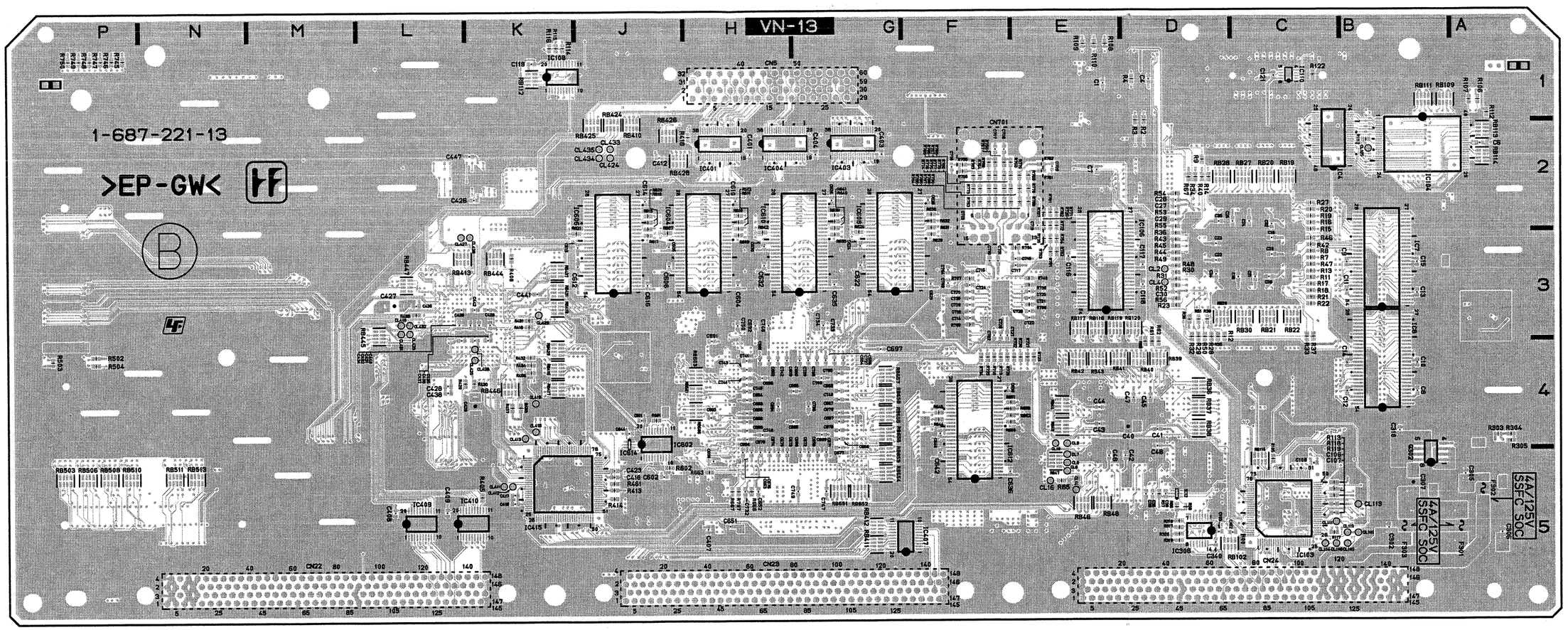

VN-13 -B SIDE-
SUFFIX: -13

4-67 (c)

SWC-40 (1-677-264-13,14)

C102	*B1						
C103	C1						
CN1	B1						
D102	B2						
Q100	*C2						
Q101	*B2						
Q102	*A2						
Q103	*A2						
R100	*C1						
R101	*C1						
R102	*A1						
R103	*A1						
R104	*B1						
R105	*B1						
R106	*A1						
S100	C2						
S101	B2						
S102	A2						

*:B SIDE

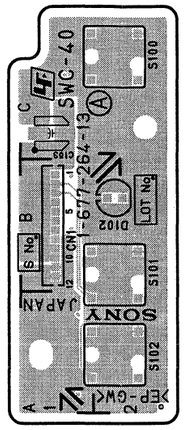

SWC-40 -A SIDE-
SUFFIX: -13, 14

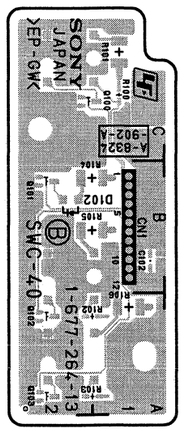

SWC-40 -B SIDE-
SUFFIX: -13, 14

TC-104 (1-677-260-14)

C100	A1	D100	C1	R106	A1	T300	B3
C101	B1	D400	E3	R107	A1		
C102	B1	D401	D1	R108	C1	TP100	A1
C103	B1			R109	B1	TP101	A1
C104	B1	E100	A2	R110	B1	TP102	A4
C105	B1	E400	A3	R111	B1	TP200	A2
C106	B1			R112	B1	TP201	A2
C107	C1	IC100	A1	R113	B1	TP204	B2
C108	C1	IC101	B1	R114	B1	TP301	A3
C109	C1	IC102	B1	R115	B1	TP400	A3
C110	C1	IC103	B1	R116	C1	TP401	A4
C111	C1	IC104	C1	R117	C1		
C112	C1	IC105	C1	R118	C1		
C113	C1	IC200	D2	R119	C1		
C114	B1	IC300	C3	R120	C1		
C115	B1	IC400	D4	R121	C1		
C117	B1	IC401	D3	R122	C1		
C200	C2	IC402	D1	R123	C1		
C201	C2	IC403	E2	R124	C1		
C202	C2	IC404	E2	R125	C1		
C203	C2	IC900	D3	R126	C1		
C204	B2			R127	C1		
C205	B2	L200	C2	R200	D2		
C206	C2	L300	C2	R201	C2		
C209	A2	L400	D3	R202	B2		
C210	A2	L401	D2	R203	D2		
C211	C2			R205	D2		
C300	C3	LV200	A2	R206	C2		
C301	C3			R207	C2		
C302	C3	PS400	D4	R208	C2		
C303	C3	PS401	D4	R209	C2		
C304	B3	PS402	D2	R210	A2		
C305	B3			R211	B2		
C307	C3	Q100	A1	R212	D2		
C308	C3	Q101	B1	R213	B2		
C400	D3	Q102	B1	R300	C3		
C401	D2	Q200	D2	R301	C3		
C402	D3	Q203	C2	R302	C3		
C403	D3	Q205	C2	R303	C3		
C404	D2	Q206	C2	R304	C3		
C405	C2	Q300	C3	R305	C3		
C406	C3	Q302	C3	R306	C3		
C407	E2	Q303	C3	R307	A3		
C408	E2	Q304	C3	R401	D2		
C411	E3	Q401	D2	R402	E2		
C412	D2	Q402	E2	R403	E2		
C413	D3	Q900	D2	R404	E1		
C414	E2	Q901	C3	R405	E1		
C902	B1			R900	B1		
		R100	A1	R901	C3		
CN100	A1	R101	A1	R902	C3		
CN200	C4	R102	B1				
CN300	A3	R103	B1	RB401	C4		
CN500	B3	R104	B1				
CN600	B4	R105	A1	T200	C2		

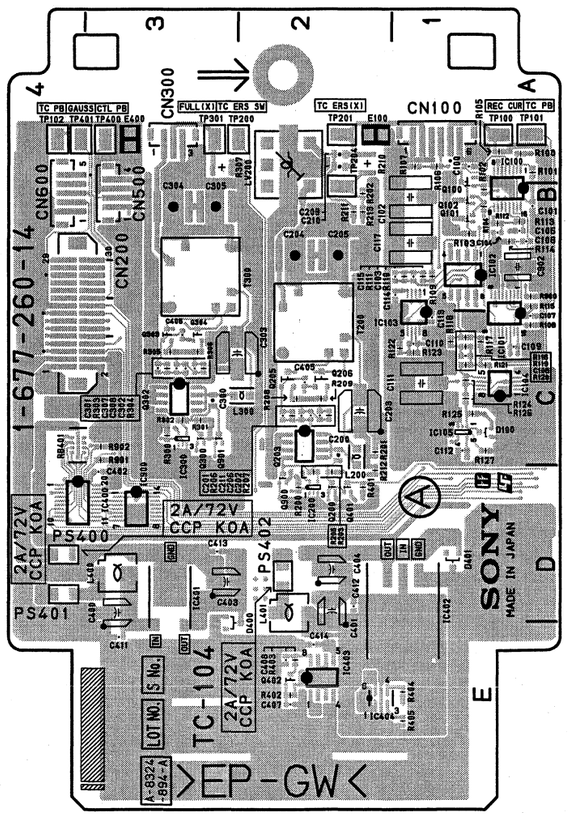

TC-104 -A SIDE-
SUFFIX: -14

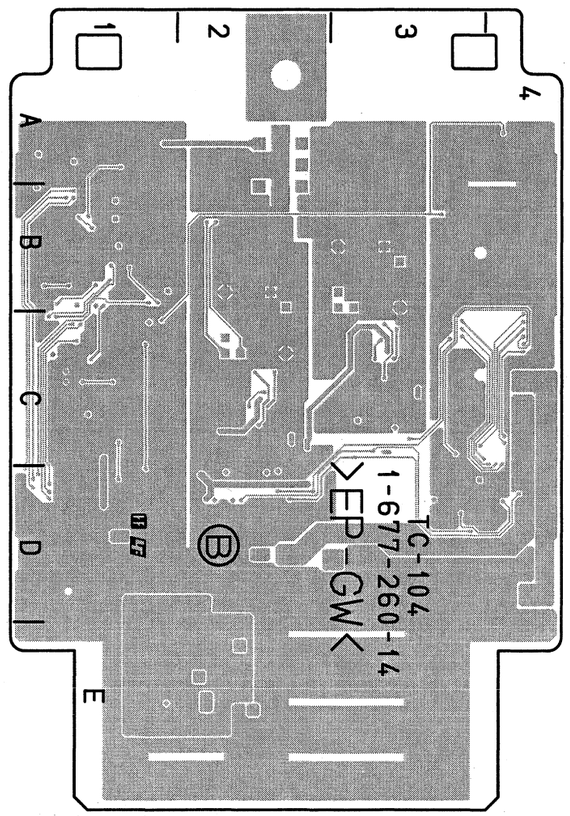

TC-104 -B SIDE-
SUFFIX: -14

VN-13 (1-687-221-12)

C1	*E1	C326	J4	C643	F5	C748	*H4	CN1	D1	IC605	J3	R103	C5	R609	*H3	R743	E3	RB106	C5	S105	E1
C2	E1	C327	A3	C644	*J4	C749	*G5	CN2	A2	IC606	*J3	R104	C5	R610	*H2	R744	E3	RB107	C5		
C3	E1	C328	J4	C651	*H5	C750	*H3	CN5	H1	IC607	J3	R105	*C5	R611	*H2	R745	*P1	RB108	C5	TP101	B1
C4	*D1	C329	A3	C652	*H5			CN6	P3	IC608	*F3	R106	*A1	R612	*H2	R746	*P1	RB109	*B1	TP102	B1
C6	*A2	C331	D5	C653	H5	CL1	D3	CN22	M5	IC609	G3	R107	*A1	R613	J3	R747	*P1	RB110	*C5	TP401	M3
C7	*E2	C336	C5	C654	*G4	CL2	*D3	CN23	H5	IC610	*G3	R108	*E1	R614	J2	R748	*P1	RB111	*B1	TP402	F5
C8	*B4	C340	*D5	C655	*G4	CL3	D3	CN24	C5	IC611	H3	R109	*E1	R615	J2	R749	*P1	RB112	*K1	TP403	F5
C9	*B3	C401	*H2	C656	*G4	CL4	*D3	CN101	K1	IC612	*F5	R110	*E1	R616	J2	R750	*P1	RB113	*A2	TP404	F5
C10	*B4	C402	H2	C657	*G4	CL5	D4	CN102	C1	IC613	F5	R111	*B2	R617	*J3	R751	*E3	RB114	*A2	TP601	J5
C11	*B3	C403	*G2	C658	*G4	CL6	*E5	CN110	M1	IC614	*J4	R112	*A1	R618	*J2	R752	*E3	RB115	B2	TP602	J4
C12	*B4	C404	*G2	C659	*G5	CL7	*E5	CN501	N5	IC701	F3	R114	*K1	R619	*J2	R753	*E3	RB116	B2	TP651	H5
C13	*B3	C405	G2	C662	*H4	CL8	*E5	CN701	F2	IC702	F2	R115	*K1	R620	*J2	R754	*E3	RB117	*E3		
C14	*B4	C406	G2	C663	*H5	CL9	*E4	CN702	F1			R116	*K1	R621	*J3	R755	*F2	RB118	*E3	X1	E1
C15	*B3	C407	*H5	C664	*H4	CL10	*E4			L101	C5	R117	*C5	R622	J3	R756	*F2	RB119	*E3	X651	H5
C16	D3	C408	*L5	C665	*H4	CL11	E5	D102	E1	L102	B5	R118	*C5	R623	F3	R757	*F2	RB120	*D3	X701	F3
C17	D2	C409	*L5	C666	*H4	CL12	E4	D103	E1	L301	A5	R119	*C5	R624	*G3	R758	*F2	RB121	E3		
C18	*C3	C410	M5	C667	*G4	CL13	E5	D104	E1	L302	B5	R120	C5	R625	G3	R759	*F2	RB122	D3	*:B SIDE	
C19	*C3	C411	G5	C668	*G5	CL14	*E5	D701	P1	L303	J4	R121	C5	R626	G2	R760	*E2	RB123	E3		
C20	*C3	C412	*J2	C669	*H4	CL15	E5	D702	P1	L304	A3	R122	*C1	R627	G2	R761	*E2	RB124	E3		
C21	*C3	C413	K4	C670	*H5	CL16	*E5	D703	P1	L401	H2	R301	B5	R628	G2	R762	*E2	RB301	D5		
C22	*D3	C414	K5	C671	*G5	CL101	*B5	D704	P1	L402	G2	R302	B5	R629	*F3	R763	*F2	RB401	F5		
C23	*D3	C415	K5	C672	*G5	CL102	*B5	D705	P1	L403	G2	R303	*A4	R630	*F2	R764	*F2	RB402	J5		
C24	*C2	C416	*J5	C673	*H5	CL103	*C5	D706	P1	L651	H5	R304	*A4	R631	*F2	R765	*F2	RB403	L5		
C25	*C2	C417	*K5	C674	*H5	CL104	*C5					R305	*A4	R632	*F2	R766	*F2	RB404	L5		
C26	A2	C418	*K5	C675	*H5	CL105	*B2	E301	F2	Q301	B5	R306	B5	R633	H3	R767	*F2	RB405	K3		
C27	*D2	C419	K5	C676	*H5	CL106	A2	E302	A1	Q302	*B5	R307	B4	R634	H2	R768	*E2	RB406	J5		
C28	*D2	C420	J5	C677	*G4	CL110	*B5	E303	C4	Q303	D5	R308	J3	R635	H2	R769	*E2	RB407	L5		
C29	*D2	C421	J4	C678	*G4	CL111	*C5	E304	D1			R309	A3	R636	H2	R770	*E2	RB408	K5		
C30	*D3	C422	K4	C679	*G4	CL112	*B5	E401	E5	R1	E1	R310	J3	R637	G3	R771	*E2	RB410	*J2		
C31	D2	C423	*J5	C680	*G4	CL113	*B5	E402	N5	R2	*D1	R311	A3	R638	*G3	R772	*E2	RB411	*G5		
C32	*C2	C424	M5	C681	*H4	CL116	*C5	E405	P1	R3	*D1	R312	J3	R639	*G2	R773	*F2	RB412	*G5		
C33	*C3	C426	*K2	C682	*H4	CL301	J3	E406	B4	R4	*D1	R313	A3	R640	*G2	R774	*F2	RB413	*L3		
C34	*D3	C427	*L3	C683	*H4	CL302	A3	E651	F5	R5	D2	R314	D5	R641	*G2	R775	*F2	RB414	K4		
C35	*D2	C428	*L4	C684	*H4	CL411	*K5	E652	K5	R6	D2	R315	C5	R642	*H3	R776	*F2	RB415	K4		
C36	*D5	C429	*K4	C690	*H5	CL412	*K5	E653	K2	R7	*C3	R316	C5	R643	F4	R777	*F2	RB416	*K4		
C38	*D5	C430	*L3	C691	*H3	CL413	*K4			R8	*C3	R317	*D5	R644	*F4	R778	*E2	RB417	*K4		
C39	*D5	C431	*K3	C692	*H3	CL414	K5	F301	*A5	R9	*D2	R318	*D5	R645	*F4	R779	*E2	RB418	K4		
C40	*D4	C432	*K3	C693	*H4	CL415	*K4	F302	*A5	R10	D2	R319	*D5	R646	F4	R780	*E2	RB419	*K3		
C41	*D4	C433	*K3	C694	*H4	CL416	J5	F303	*B5	R11	*C3	R320	*D5	R647	F4	R781	*E2	RB420	*L4		
C42	*D5	C434	*L3	C695	*G4	CL418	*L3			R12	*D3	R321	J3	R648	F4	R782	*E2	RB424	*J2		
C43	*E4	C435	*K3	C696	*G4	CL419	*K4	FL401	M5	R13	*C3	R322	A4	R649	F4	R783	*F2	RB425	*J2		
C44	*E4	C436	*K3	C697	*G4	CL423	*L3	FL402	M5	R14	*D2	R323	J3	R650	*F4	R784	*F2	RB426	*J2		
C45	*D4	C437	*L3	C698	*H4	CL424	*J2			R15	*C2	R324	J3	R651	*F4	R785	*F2	RB427	J2		
C46	*E5	C438	*L4	C699	*G4	CL425	*K4	IC1	C3	R16	*C2	R325	A3	R652	*F4	R786	*F2	RB428	*J2		
C47	*D4	C439	*L3	C700	*G4	CL426	*K4	IC2	D4	R17	*C3	R326	A4	R653	*F4	R787	*F2	RB429	*K4		
C48	*D4	C440	*K3	C701	E3	CL427	*L3	IC4	*B2	R18	*C3	R327	D5	R654	F4	R788	*E2	RB430	K3		
C101	C4	C441	*K3	C702	*F3	CL428	*K3	IC5	*A2	R19	*C2	R328	J4	R655	J5	R789	*E2	RB431	*K3		
C102	*C5	C442	*K3	C703	*F3	CL429	*K3	IC6	E2	R20	*C2	R329	A3	R656	J5	R790	*E2	RB432	K3		
C103	*D5	C446	K5	C704	*F3	CL431	*L3	IC7	*B3	R21	*C3	R330	A3	R657	H4	R791	F1	RB433	K4		
C104	B5	C447	*K2	C705	F1	CL432	*L3	IC8	*B4	R22	*C3	R331	J4	R658	H4	R792	F1	RB434	K4		
C105	C5	C601	*J4	C706	*F2	CL433	*J2	IC9	B3	R23	*D3	R332	A3	R663	*H5	R793	F1	RB435	K3		
C106	*C5	C602	*J5	C707	*F2	CL434	*J2	IC10	B4	R27	*C2	R335	D5	R664	F5	R794	*E3	RB436	K4		
C107	*C5	C603	J4	C708	*F2	CL435	*J2	IC11	E1	R28	*D3	R341	J3	R666	*H5	R795	F3	RB437	*K3		
C108	*C5	C604	*H3	C709	*E2	CL501	N5	IC12	*D5	R29	*D3	R342	A4	R667	*H5	R796	*E3	RB444	*K3		
C109	C5	C605	J3	C710	*E2	CL601	J4	IC13	D1	R30	*D3	R401	H2	R705	E3	R797	*H5	RB445	*L3		
C110	C5	C606	*J3	C711	E2	CL602	J4	IC101	C5	R31	*D3	R402	G5	R706	F4			RB446	*K4		
C111	C5	C607	J2	C712	F2	CL603	J4	IC102	C5	R32	*D3	R403	G5	R707	*F3	RB17	C2	RB447	*L3		
C112	C5	C608	*J3	C713	*F2	CL604	J4	IC103	*C5	R33	*C3	R404	G5	R708	E3	RB18	C2	RB503	*P5		
C113	C5	C609	H3	C714	*F3	CL605	J5	IC104	*B1	R34	*D2	R405	*K5	R709	*F3	RB19	*C2	RB504	P5		
C114	B2	C610	*H2	C715	*F3	CL606	J5	IC105	A1	R35	*D3	R408	*K3	R710	F3	RB20	*C2	RB505	P5		
C115	B2	C611	H3	C716	*F3	CL607	J5	IC106	*D3	R36	*D3	R413	*J5	R711	F3	RB21	*C3	RB506	*P5		
C116	*E3	C612	*J3	C717	*E3	CL608	J3	IC107	E3	R37	*C3	R414	*J5	R712	F3	RB22	*C3	RB507	P5		
C117	*D3	C613	J3	C718	*E3	CL609	J3	IC108	*K1	R38	*D3	R416	*K3	R713	F3	RB23	C3	RB508	*P5		
C118	*D3	C614	*J2	C719	*F3	CL610	K3	IC109	C5	R39	*D3	R418	*H2	R714	F3	RB24	C3	RB509	P5		
C119	*K1	C615	J3	C720	*F3	CL611	K2	IC110	*C1	R40	*A2	R424	L3	R715	F3	RB25	D2	RB510	*P5		
C120	B5	C616	*J3	C721	*E3	CL612	K2	IC301	A4	R41	*A1	R425	K5	R716	F3	RB26	C2	RB511	*N5		
C121	*C1	C617	J3	C722	*E3	CL613	K2	IC302	J4	R42	*C3	R426	K5	R717	F4	RB27	*C2	RB512	N5		
C301	B5	C618	J2	C723	E3	CL614	G3	IC303	A3	R43	*D3	R427	K5	R718	*F4	RB28	*D2	RB513	*N5		
C302	*B5	C619	*J3	C724	*F3	CL615	G2	IC306	*D5	R44	*D3	R429	*L4	R719	*F4	RB29	*D3	RB514	N5		
C303	A5	C620	*F3	C725	*E3	CL616	G2	IC307	C5	R45	*D3	R430	*K4	R720	*F4	RB30	*C3	RB515	N5		
C304	A5	C621	F3	C726	*E3	CL617	G2	IC401	*H2	R46	*C3	R431	*K3	R721	F4	RB31	C3	RB601	*H4		
C305	*A5	C622	*G3	C727	*F3	CL618	F3	IC402	H2	R47	*C3	R432	*K4	R722	F4	RB32	D3	RB602	H4		
C306	*A5	C623	G3	C728	*F3	CL619	G3	IC403	*G2	R48	*D3	R433	*K3	R723	F4	RB33	*A2	RB603	*H4		
C307	*B5	C624	*G3	C729	*F3	CL620	H3	IC404	*H2	R49	*D3	R434	*K4	R724	E3	RB34	D5	RB604	H4		
C308	A5	C625	G2	C730	*F3	CL621	H2	IC405	G2	R50	*D3	R455	*L3	R725	*E4	RB36	*D4	RB605	H4		
C309	B5	C626	*F2	C731	*F3	CL622	H2	IC406	H2	R51	*D3	R456	*K4	R726	E4	RB37	*D4	RB606	*H4		
C310	*B4	C627	F3	C732	*H5	CL623	H2	IC407	*F5	R52	*D3	R457	*K4	R727	*E4	RB38	*D4	RB651	*G5		
C311	B4	C628	*G2	C733	*G3	CL624	F4	IC408	H5	R53	*D2	R458	*K4	R728	E4	RB39	*D4	RB652	*G5		
C312	J3	C629	G3	C734	*G3	CL625	F4	IC409	*L5	R54	*D2	R459	K5	R729	E4	RB40	*D4	RB653	*G5		
C313	A4	C630	*H3	C735	*G4	CL626	F4	IC410	*L5	R55	*D2	R460	K5	R730	*E4	RB41	*E4	RB654	*G5		
C314	J3	C631	G3	C736	*G4	CL627	F4	IC411	M5	R56	*D3	R501	*P4	R731	E4	RB42	*E4	RB655	*G4		
C315	A4	C632	*H3	C737	*G4	CL628	E4	IC412	K3	R57	*D5	R502	*P4	R732	*E4	RB43	*E4	RB656	*G4		
C316	J3	C633	H3	C738	*G4	CL629	F4	IC413	K5	R58	*D5	R503	*P4	R733	*F4	RB44	*E4	RB657	*G4		
C317	A3	C634	H2	C739	*G4	CL651	H5	IC414	J2	R61	*D4	R504	*P4	R734	*F4	RB45	*E4	RB658	*G4		
C318	J4	C635	*G3	C740	*G4	CL701	F3	IC415	*K5	R62	*D4	R601	*J4	R735	*E3	RB46	*E5	RB659	F4		
C319	A3	C636	*F5	C741	*H4	CL702	F3	IC416	L2	R63	*D4	R602	*J5	R736	*E2	RB47	*E5	RB660	F5		
C320	J4	C637	F5	C742	*H4	CL703	F3	IC420	K5	R64	D5	R603	J2	R737	*E2	RB48	*E5	RB661	F4		
C321	A3	C638	*F4	C743	*H4	CL704	F4	IC421	M5	R65	*E5	R604	J2	R738	*E3	RB101	C5	RB662	F4		
C322	J4	C639	F4	C744	*H4	CL705	F4	IC601	G4	R66	*D5	R605	J2	R739	E3	RB102	*D5				
C323	A3	C640	*F4	C745	*H4	CL706	F4	IC602	*J5	R67	*D2	R606	H3	R740	*E3	RB103	C5	S101	B1		
C324	J4	C641	F4	C746	*H3	CL707	F3	IC603	J4	R101	C5	R607	*J3	R741	E3	RB104	B5	S102	A1		
C325	A3	C642	*F5	C747	*G5	CL708	F3	IC604	*H3	R102	C5	R608	J3	R742	E3	RB105	C5	S104	J1		

VN-13
SUFFIX: -12

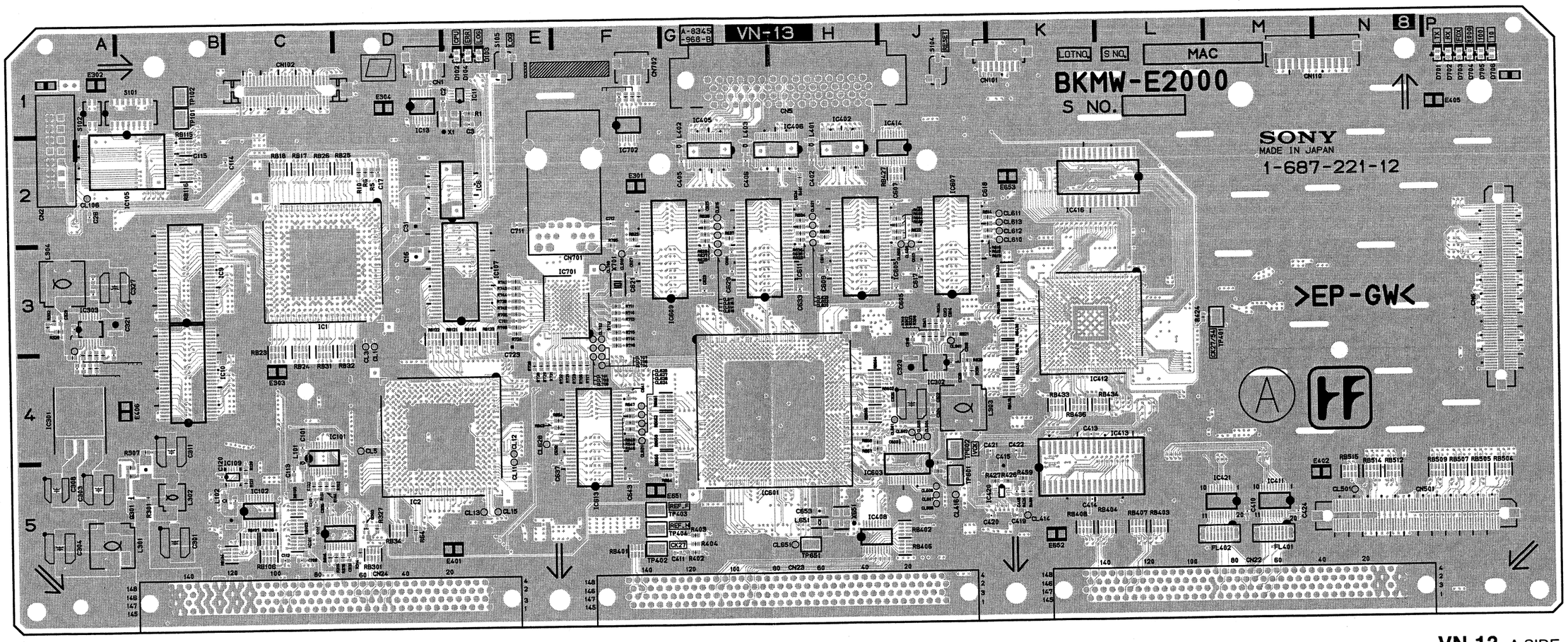

Components locations list; previous page

VN-13 -A SIDE-
SUFFIX: -12
For BKMW-E2000

4-66 (b)

VN-13
SUFFIX: -12

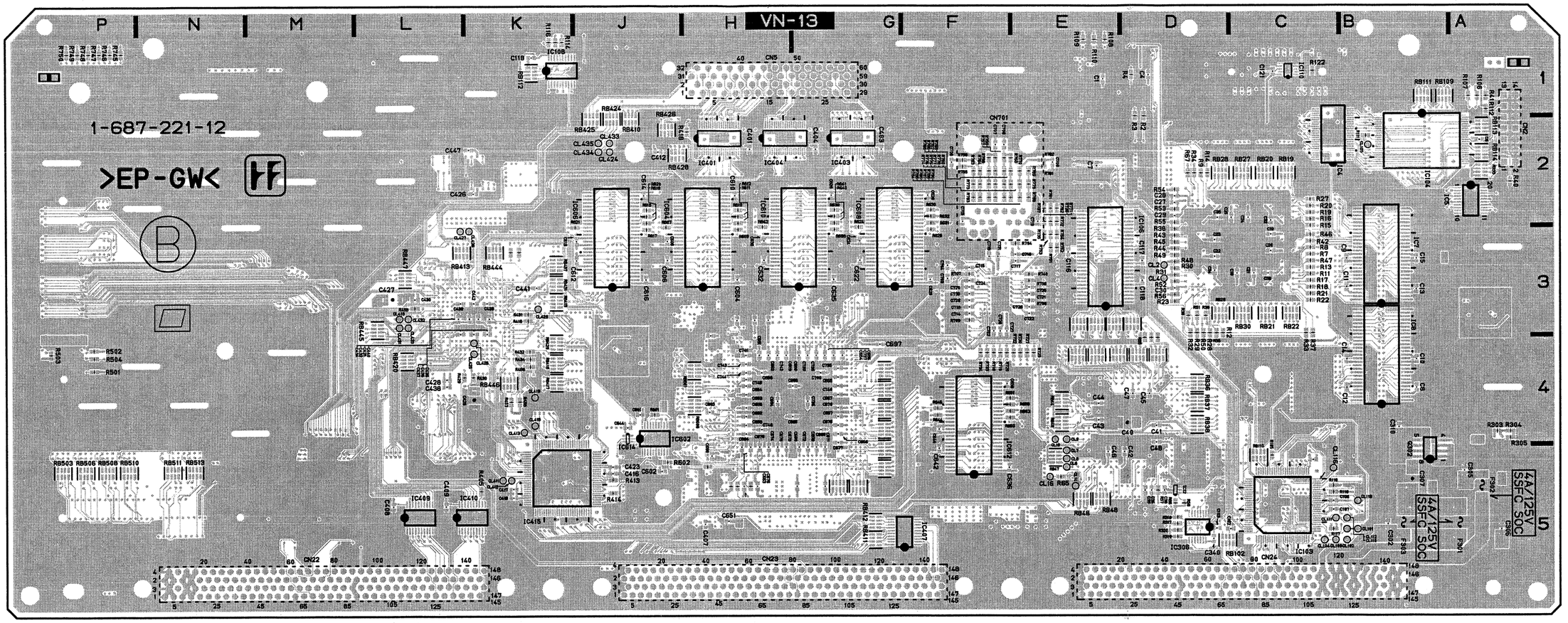

VN-13 -B SIDE-
SUFFIX: -12
For BKMW-E2000

4-67 (b)

SW-1106, SWC-40, TC-104
SUFFIX: -12 SUFFIX: -13

TC-104, SWC-40, SW-1106
SUFFIX: -13 SUFFIX: -12

SWC-40 (1-677-264-12)

C102	*B1				
C103	C1				
CN1	B1				
D102	B2				
Q100	*C2				
Q101	*B2				
Q102	*A2				
Q103	*A2				
R100	*C1				
R101	*C1				
R102	*A1				
R103	*A1				
R104	*B1				
R105	*B1				
R106	*A1				
S100	C2				
S101	B2				
S102	A2				

*:B SIDE

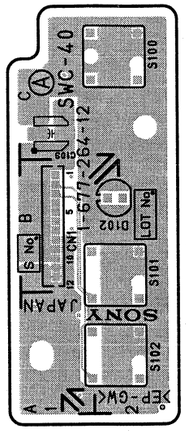

SWC-40 -A SIDE-
SUFFIX: -12

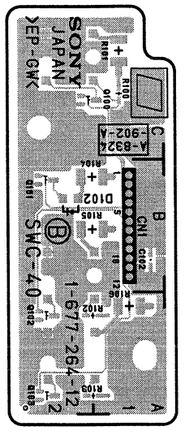

SWC-40 -B SIDE-
SUFFIX: -12

SW-1106 (1-687-220-11,12)

C1	*B3	IC5	A1	R21	*B2
C2	*B2	IC6	A1	R23	*B2
C3	*A2	IC7	B3	R26	*B3
C4	*B2	IC8	B2	R29	*B3
C5	A2	IC9	A1		
C6	*B3	IC10	B3	S1	B1
C7	*B2			S2	B2
C8	*B2	Q1	*B1	S3	B2
C9	*B2	Q2	*B1	S4	B3
C10	*B2	Q3	*B2		
C11	*B3	Q4	*B3	*:B SIDE	
C12	*B3	Q5	*B3		
		Q6	*B3		
CN1	*A2				
CN2	*A1	R1	*B2		
		R6	A1		
D1	B2	R8	*B1		
D2	B3	R9	*B1		
		R11	*B2		
IC1	B2	R13	*B2		
IC2	B2	R14	*B3		
IC3	A1	R16	A1		
IC4	A1	R20	*B3		

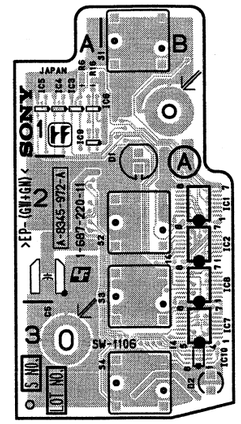

SW-1106 -A SIDE-
SUFFIX: -11, 12

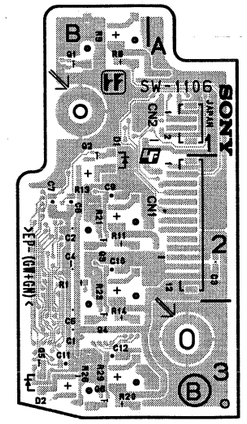

SW-1106 -B SIDE-
SUFFIX: -11, 12

TC-104 (1-677-260-13)

C100	B1	IC400	D4	R122	C1
C101	B1	IC401	D3	R123	C1
C102	B1	IC402	D1	R124	C1
C103	B1	IC900	D3	R125	C1
C104	B1			R126	C1
C105	B1	L200	C2	R127	C1
C106	B1	L300	C3	R200	D2
C107	B1	L400	D3	R203	D2
C108	C1	L401	D2	R205	D2
C109	C1			R206	C2
C110	C1	LV200	B2	R207	C2
C111	C1			R208	C2
C112	C1	PS400	D4	R209	C2
C200	C2	PS401	D4	R210	A2
C201	C2	PS402	D2	R300	C3
C202	C2			R301	C3
C203	C2	Q100	B1	R302	C3
C204	B2	Q101	B1	R303	C3
C205	B2	Q102	B1	R304	C3
C206	C2	Q200	D2	R305	C3
C300	C3	Q202	D2	R306	C3
C301	C3	Q203	C2	R307	B3
C302	C3	Q205	C2	R401	D2
C303	C3	Q206	C2	R900	B1
C304	B3	Q300	C3	R901	C3
C305	B3	Q301	C3	R902	C3
C306	C3	Q302	C3		
C400	D3	Q303	C3	RB401	C4
C401	D2	Q304	C3		
C402	D3	Q401	D2	T200	C2
C403	D3	Q900	D2	T300	B3
C404	D1	Q901	C3		
C405	C2			TP100	A1
C406	C3	R100	A1	TP101	A1
C902	B1	R101	B1	TP102	A4
		R102	B1	TP200	A2
CN100	A1	R103	B1	TP201	A2
CN200	B4	R104	B1	TP301	A3
CN300	A3	R105	A1	TP400	A3
CN500	B3	R106	B1	TP401	A4
CN600	B4	R107	B1		
		R108	C1		
D100	C1	R109	B1		
D400	E3	R110	B1		
D401	D1	R111	B1		
		R112	B1		
E100	A2	R113	B1		
E400	A3	R114	B1		
		R115	B1		
IC100	B1	R116	C1		
IC101	B1	R117	C1		
IC102	B1	R118	C1		
IC103	B1	R119	C1		
IC104	C1	R120	C1		
IC105	C1	R121	C1		

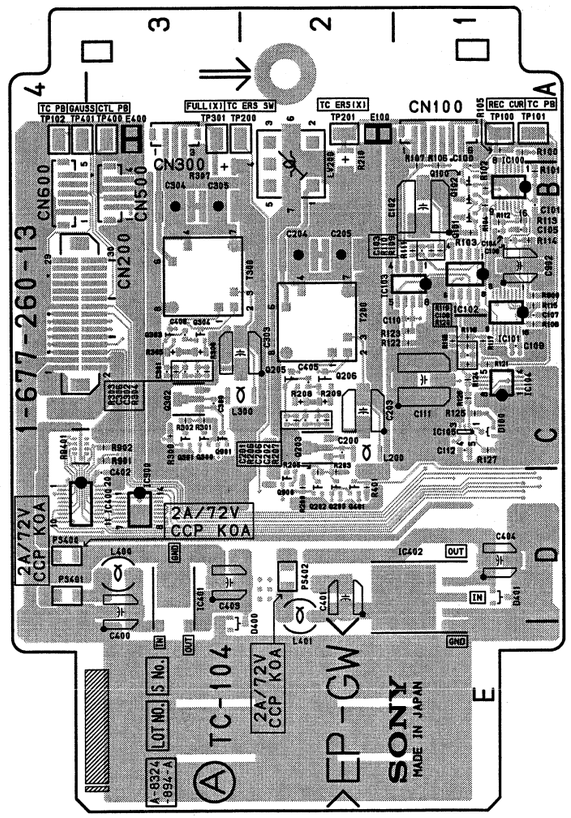

TC-104 -A SIDE-
SUFFIX: -13

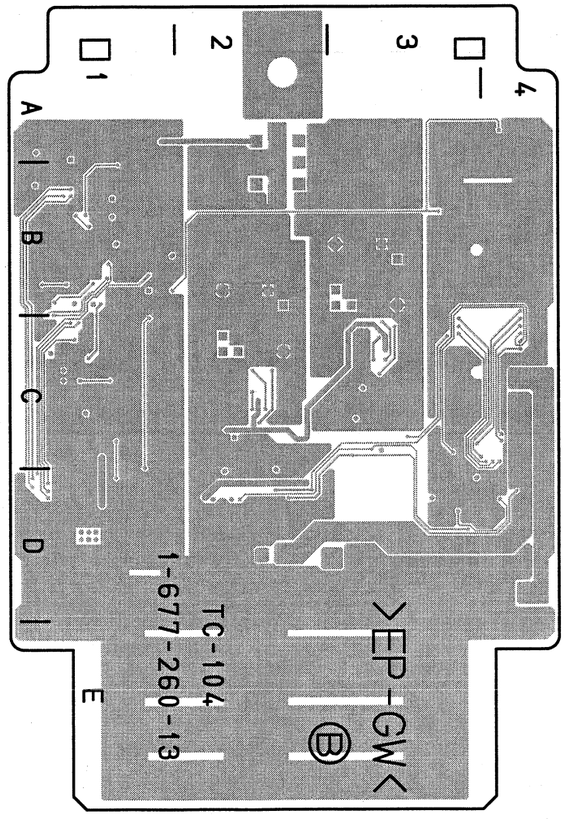

TC-104 -B SIDE-
SUFFIX: -13

4-64 (a)

VN-13 (1-687-221-11)

C1	*B2	C334	*B5	C628	H5	C1003	*F4	CL401	*L2	CL718	G4	IC1	C3	R4	*B3	R312	*A5	R416	*K2	R1038	J2	RB14	*C3	RB439	*M3
C2	*D4	C335	B5	C629	H5	C1004	F4	CL402	*L2	CL719	G4	IC2	E5	R5	*D2	R313	*A3	R417	J2	R1039	J2	RB15	C4	RB441	*M3
C3	*D2	C336	*B4	C630	H5	C1005	*F4	CL403	*L2	CL720	G4	IC3	*A2	R6	*C2	R314	*A3	R418	*H1	R1040	J2	RB16	*C4	RB444	*K2
C5	C2	C337	B4	C631	H5	C1006	F4	CL404	*L2	CL721	*G4	IC4	*D4	R7	*B3	R315	*A4	R419	*J2	R1041	J2	RB17	C2	RB445	*K3
C6	*C2	C401	*G2	C632	G4	C1007	*F3	CL405	*L2	CL722	G4	IC5	*D2	R8	*B3	R316	*A4	R420	*K1	R1042	*H2	RB18	C2	RB446	*K3
C7	*C2	C402	G2	C633	H5	C1008	F3	CL406	*L2	CL723	*G4	IC101	C5	R9	*C2	R317	A3	R421	*J1	R1043	*H2	RB19	*C2	RB501	J3
C8	*C2	C403	*F2	C634	H3	C1009	G3	CL407	*L2	CL724	G4	IC102	*E1	R10	*B2	R318	*N3	R422	*K1	R1044	*H2	RB20	*C2	RB502	J4
C9	*C2	C404	*G2	C635	J4	C1010	*F3	CL408	*L2	CL801	*J4	IC104	*E2	R11	*C3	R319	N3	R423	*K1	R1045	*H2	RB21	*C3	RB503	*L5
C10	*C3	C405	F2	C636	G3	C1011	G2	CL409	*K3	CL802	*J4	IC105	*D1	R12	*D3	R320	N5	R424	*J2	R1046	H2	RB22	*C3	RB504	*L5
C11	*C3	C406	G2	C637	H3	C1012	*F2	CL410	*K3	CL803	*J4	IC107	B4	R13	*D3	R321	*N5	R425	M3	R1047	*J2	RB23	C4	RB505	*L5
C12	*C3	C407	F5	C638	*H3	C1013	H3	CL411	*N3	CL804	*J3	IC108	B2	R14	*D3	R322	*N5	R426	M3	R1048	H2	RB24	C4	RB506	*L5
C13	*C3	C408	*K5	C639	*G3	C1014	*F3	CL412	*N4	CL1001	G3	IC109	B3	R15	*D3	R323	*N5	R427	M3	R1102	*E3	RB25	C4	RB507	*M5
C15	B2	C409	*K5	C640	*H3	C1015	H2	CL413	*N3	CL1002	G4	IC110	*D3	R16	*D3	R324	N5	R428	M3	R1103	*G3	RB26	*A2	RB508	*M5
C16	*C2	C411	F5	C641	*G3	C1016	*F2	CL414	*M4	CL1003	G4	IC111	D3	R17	*B3	R325	N5	R429	*K3	R1104	*E3	RB27	*D4	RB509	*M5
C17	*C2	C412	H2	C642	*H3	C1017	*H3	CL415	*M3	CL1004	G4	IC113	*C5	R18	*D3	R326	N5	R430	*L3	R1105	*E3	RB28	*E4	RB510	*M5
C18	*C3	C413	M3	C643	*H3	C1018	F3	CL416	*M4	CL1005	G4	IC114	*D5	R19	*D3	R327	N4	R431	*L2	R1106	*E3	RB29	*E4	RB511	*M5
C19	*C3	C414	L3	C644	*H3	C1019	*H2	CL417	*K2	CL1006	F4	IC115	*C2	R20	*C3	R328	N4	R432	*L2	R1108	*E3	RB30	*E4	RB512	*N5
C20	*D2	C415	*N3	C645	*H3	C1020	F2	CL418	*K2	CL1007	G4	IC301	*A3	R21	*A2	R329	*N4	R433	*L2	R1109	*E2	RB31	*D4	RB513	*N5
C21	*D2	C416	*M3	C646	*H3	C1021	*G3	CL419	*L3	CL1008	F4	IC303	A5	R22	*D3	R330	*N3	R501	*K5	R1110	*E2	RB32	*E4	RB514	*N5
C22	*D2	C417	*M4	C647	H3	C1022	F3	CL420	*L3	CL1009	F2	IC304	*A3	R23	*D3	R331	*N4	R502	*K4	R1111	*E3	RB33	*D5	RB515	*N5
C23	*D3	C418	*M3	C648	*H3	C1023	F2	CL421	*L3	CL1010	F2	IC305	*A3	R24	*D3	R332	*N5	R503	*L4	R1112	*E3	RB34	*D4	RB701	*F4
C24	*E5	C419	*M3	C649	H3	C1024	*G2	CL422	*L3	CL1011	F2	IC306	*D5	R25	*D3	R333	N5	R504	*L4	R1113	*E3	RB35	*F5	RB702	*F4
C25	*E5	C420	*N4	C650	*H3	C1025	*H3	CL423	*L3	CL1012	F2	IC307	*D5	R26	*C3	R334	*N5	R604	*J4	R1114	*E3	RB36	*F4	RB703	*F4
C26	E5	C421	*N4	C651	H3	C1026	H3	CL424	*H3	CL1013	*F2	IC401	*H2	R27	*C3	R335	*N4	R605	*J5	R1115	*E3	RB37	*E5	RB708	F3
C28	*E4	C422	*M4	C652	*J4	C1027	*H2	CL425	*H3	CL1014	*F2	IC402	H1	R28	*B3	R336	*N4	R606	*J4	R1116	*E3	RB38	*F5	RB709	G3
C29	*E4	C423	*M3	C653	*J4	C1028	H2	CL426	*H3	CL1015	F2	IC403	*G2	R29	*B3	R337	*N4	R607	*J4	R1117	*E3	RB39	*E5	RB710	*F3
C30	*E4	C424	*M3	C654	*J4	C1029	*J3	CL503	*L5	CL1016	F2	IC404	*G2	R30	*D3	R338	N4	R608	*J4	R1118	*N1	RB40	*E5	RB711	G3
C31	*E5	C425	K2	C655	J4	C1030	J3	CL504	L3	CL1017	F2	IC405	G1	R31	*D2	R339	N3	R609	*J4	R1119	*N1	RB50	C5	RB712	*G3
C32	*E5	C426	*L3	C656	*J4	C1031	*J2	CL505	L3	CL1018	F2	IC406	G1	R32	*D2	R340	N5	R610	*J4	R1120	*N1	RB102	*A1	RB713	F3
C33	*E5	C427	*J3	C657	J4	C1032	J2	CL506	L3	CL1019	J2	IC407	F5	R33	*D2	R341	*N5	R611	*J5	R1121	*P1	RB103	*C5	RB714	*F3
C34	*E5	C428	*J3	C658	J4	C1101	*E3	CL507	L3	CL1020	J2	IC408	F5	R34	*D3	R342	*N5	R612	*G4	R1122	*P1	RB104	*B1	RB715	F4
C35	*E5	C429	*L2	C659	*J4	C1102	*E3	CL508	L3	CL1021	J2	IC409	*K5	R35	*D5	R343	N5	R616	*J4	R1123	*P1	RB105	*C5	RB716	F4
C36	*D2	C430	*L2	C660	*J4	C1103	*F3	CL509	K3	CL1022	J2	IC410	*K5	R36	*D5	R344	*N4	R617	*J4	R1124	*E3	RB106	*B5	RB717	F4
C101	*B5	C431	*L2	C661	*J4	C1104	*F3	CL510	K3	CL1023	H2	IC412	K3	R37	*D5	R345	N4	R618	*J3	R1125	*E3	RB107	*B5	RB718	F4
C102	*B5	C432	*L2	C662	*J4	C1105	F2	CL511	K3	CL1024	J2	IC413	M3	R38	*D4	R346	N4	R701	*F4	R1126	*E2	RB108	*B4	RB719	*F3
C104	*E1	C433	*L2	C663	J4	C1106	*F2	CL512	*K3	CL1104	*F3	IC414	H1	R39	*D4	R347	N4	R702	G4	R1127	*E2	RB109	*C4	RB720	J2
C105	*D2	C434	*K2	C664	*J4	C1107	*E2	CL513	*K3	CL1105	*F3	IC415	*M3	R40	*D4	R348	*N4	R703	G3	R1128	*F2	RB110	*B4	RB721	*J2
C107	E2	C435	*K2	C665	J4	C1108	*E2	CL514	*K4	CL1106	*F3	IC416	*L3	R41	*E5	R349	N3	R704	G3	R1129	*F2	RB111	*B4	RB722	*J2
C109	D5	C436	*K3	C666	*J4	C1109	*E2	CL515	*K3	CL1107	*F3	IC417	K1	R42	*B3	R350	*N3	R705	G3	R1130	*E2	RB112	*A2	RB723	J2
C110	*C5	C437	*K3	C667	J4	C1110	*E3	CL516	*K4	CL1108	*F3	IC418	J2	R43	*D3	R351	N5	R706	*J5	R1131	*E2	RB113	*A2	RB724	J3
C111	D5	C438	*K2	C668	H5	C1111	*E3	CL517	*K4	CL1109	*F3	IC419	*K1	R44	F5	R352	N5	R707	*J5	R1132	*E2	RB114	*D3	RB725	J2
C112	*C4	C439	*L3	C669	H5	C1112	*E3	CL518	*K3	CL1110	*F3	IC420	M3	R45	*A1	R353	*N5	R708	G5	R1133	*E2	RB115	*D3	RB726	*J2
C113	*B5	C440	*L3	C670	*H5	C1113	*E3	CL519	*K4	CL1111	F3	IC501	K4	R101	*B5	R354	*N4	R709	*G3	R1134	*E2	RB116	*D3	RB727	*J3
C114	D4	C441	*K3	C671	*H5	C1115	*E3	CL520	*J4			IC502	*L4	R102	*C5	R355	N4	R901	M2	R1135	*E2	RB117	*D3	RB801	J3
C115	*C5	C442	*L3	C672	*H5	C1116	*E3	CL521	*J4	CN1	D1	IC503	L4	R104	*C5	R356	N4	R902	*M2	R1136	*E2	RB118	D3	RB802	J3
C116	D5	C443	*J2	C673	*H5	C1117	*E3	CL522	*J4	CN2	A2	IC603	H4	R106	B5	R357	N3	R905	*N2	R1137	*E2	RB119	D3	RB803	*J3
C117	*C4	C444	J2	C674	*H5	C1118	*E3	CL523	*J4	CN5	G1	IC901	M2	R107	*D4	R358	*N4	R906	M2	R1138	*E2	RB120	D3	RB804	*J3
C118	*C5	C445	*K1	C675	*H5	C1119	*E3	CL524	*J4	CN22	L5	IC903	*M2	R108	*C4	R359	*N5	R907	M3	R1139	*E2	RB121	D3	RB805	*J2
C119	*B4	C446	M3	C676	*H5	C1120	*E3	CL525	*J4	CN23	G5	IC904	M2	R109	*C4	R360	*N5	R908	M3	R1140	*E2	RB122	*C5	RB806	*H2
C120	*B3	C501	*L4	C677	*G5	C1121	*E3	CL526	*J4	CN24	C5	IC905	*M2	R110	*C4	R361	N5	R909	M3	R1141	*E2	RB123	*C5	RB807	*H2
C121	A2	C502	*M4	C678	*G5	C1122	*E3	CL527	*J4	CN102	C1	IC906	N2	R111	*C5	R362	N5	R911	*J1	R1142	*E2	RB124	*C5	RB808	H2
C122	D3	C503	*J4	C679	G5	C1123	*E3	CL528	*K4	CN110	M1	IC907	*N2	R112	*D1	R363	*N5	R912	*J1	R1143	*E2	RB125	*C5	RB809	H2
C124	*D3	C504	*J4	C680	*G5	C1124	*E3	CL529	*J4	CN401	K1	IC908	*J1	R113	*D1	R364	*N5	R913	J1	R1144	*E2	RB126	*C1	RB810	H3
C125	*E3	C505	*L4	C681	G5	C1125	*E3	CL530	*J4	CN501	M5	IC909	M2	R116	*E1	R365	N5	R914	J1	R1145	*E2	RB127	*B1	RB811	G2
C126	*D4	C506	*K4	C682	*H5	C1126	*E3	CL531	*K4	CN802	P4	IC910	M3	R118	E2	R366	*N4	R915	*M2	R1146	*E2	RB128	D5	RB812	H2
C127	*C4	C507	*L3	C683	G5	C1127	*E3	CL532	*J4	CN803	P3	IC1001	*F4	R119	*C4	R367	N4	R1001	*F4	R1147	*E2	RB129	C5	RB813	*G3
C128	D4	C508	*K3	C684	*G5	C1128	*E3	CL533	*J4	CN901	J1	IC1002	F4	R120	*C4	R368	N4	R1002	F4	R1148	*E2	RB401	F5	RB814	*H2
C130	*C1	C509	*K5	C685	*G4	C1129	*E3	CL534	*J4	CN1102	F1	IC1003	G3	R121	*C5	R369	*N4	R1003	F4	R1149	*E2	RB402	F5	RB815	*G2
C131	*C5	C510	*K3	C686	*G4	C1130	*E3	CL535	*J4	CN1103	E2	IC1004	*F3	R122	*A1	R370	N4	R1004	F4	R1150	*E2	RB403	K5	RB816	*H3
C132	*C5	C511	*K4	C687	G4	C1131	*E3	CL536	N5			IC1005	*G3	R123	*A1	R371	*N4	R1005	F4	R1151	*E2	RB404	K5	RB817	G2
C133	*C5	C512	*L4	C688	*G4	C1132	E3	CL601	*J4	D101	D1	IC1006	F3	R124	*D1	R372	N4	R1006	F4	R1152	*E2	RB406	G5	RB818	G3
C134	*D1	C513	*L4	C689	G5			CL602	*G4	D102	D1	IC1007	*H3	R125	*D1	R373	N4	R1007	*F4	R1153	*E2	RB407	K5	RB901	*J1
C301	A2	C514	*L4	C690	*G4	CL1	C3	CL603	*G4	D103	D1	IC1008	J3	R126	*D1	R374	*A3	R1008	*F4	R1158	*E3	RB408	K5	RB1101	F3
C302	A3	C515	*K4	C691	G4	CL2	C3	CL604	*G4	D104	D1	IC1101	E3	R127	*B2	R375	*A3	R1009	*F4	R1159	*F3	RB410	*H1	RB1102	F3
C303	A4	C516	*K5	C692	G4	CL3	*D3	CL605	*J5	D301	A4	IC1102	F1	R128	*E2	R376	*D5	R1010	*F4	R1160	*E3	RB411	F5	RB1103	E4
C304	*A3	C517	*K5	C693	*G4	CL4	*D3	CL606	*J4	D302	*A4			R129	*C5	R377	*D5	R1011	*F4	R1161	*E3	RB412	F5	RB1104	*E4
C305	*A3	C518	*K4	C694	*G4	CL5	F5	CL607	*J5	D303	*A4	L1	*D4	R130	*D5	R378	*D5	R1012	F4	R1162	*E3	RB413	*L2	RB1105	E4
C306	*A3	C519	M4	C695	G4	CL6	F5	CL608	*J5	D304	A4	L2	*D4	R131	*D5	R379	*D5	R1013	*F2	R1163	*E2	RB414	K3	RB1106	E4
C307	*A4	C520	L4	C696	G3	CL7	*E5	CL609	*J4	D901	M2	L301	A3	R132	*D5	R380	*D5	R1014	G2	R1164	*E2	RB415	K3	RB1107	E4
C308	*A3	C602	*J4	C697	G4	CL8	*E5	CL610	*J4	D1101	N1	L302	A4	R133	*D5	R382	*N5	R1015	G2	R1165	*E2	RB416	*K3		
C310	B5	C604	*G4	C698	J4	CL9	F5	CL611	*J4	D1102	N1	L305	B5	R138	*D1	R383	*C5	R1016	*F2	R1166	*E2	RB417	*K3	S101	B1
C311	A5	C606	*G4	C699	G4	CL10	F5	CL612	*J4	D1103	N1	L306	A5	R139	*D1	R384	*D5	R1017	*F2	R1167	*E2	RB418	K3	S102	A1
C312	A5	C607	*G4	C700	G4	CL11	D5	CL613	*J3	D1104	P1	L308	A4	R140	*D1	R385	*D5	R1018	*F2	R1168	*E2	RB419	*K2	S103	D1
C314	*B5	C608	*J4	C701	G5	CL101	B5	CL614	*J3	D1105	P1	L309	A3	R142	*B4	R386	*N3	R1019	*F2	R1169	*E2	RB420	*K2	S104	J1
C315	*A5	C610	G3	C702	*G4	CL102	C5	CL615	*G4	D1106	P1	L401	G2	R143	D4	R387	*C5	R1020	H2	R1170	*E2	RB421	K2		
C316	*A5	C611	J3	C703	J5	CL103	C5	CL701	G4			L402	F2	R144	B4	R388	*N4	R1021	H2	R1171	*F1	RB422	K2	TP1	F5
C317	*A4	C612	G5	C704	*G5	CL104	C5	CL702	G4	E301	M4	L403	G2	R145	D4	R389	B5	R1022	H2	R1172	*F1	RB423	*K2	TP101	B1
C318	*A4	C613	J5	C705	*G4	CL106	B2	CL703	G4	E302	D1	L404	M3	R146	D4	R390	A5	R1023	H2	R1173	*F1	RB424	*J2	TP102	B1
C319	*A4	C614	G4	C706	*J4	CL107	B5	CL704	*G4	E303	D5			R147	*C5	R391	A5	R1024	*F2			RB425	*H2	TP401	J2
C320	*A4	C615	G4	C707	*J5	CL108	C4	CL705	*G4	E304	A2	Q1	M3	R148	*D1	R392	B4	R1025	F2	RB1	C2	RB426	*H1	TP402	F5
C321	A3	C616	G4	C902	M2	CL109	C4	CL706	G4	E401	F1	Q2	M3	R149	*D1	R401	*J2	R1026	F2	RB2	C2	RB427	*H2	TP403	F5
C322	*A3	C617	G4	C904	*M2	CL110	C4	CL707	*G4	E402	J5	Q301	*A4	R301	A3	R402	F5	R1027	*H2	RB3	*C2	RB428	*H2	TP404	F5
C323	*A3	C618	H3	C905	N2	CL111	C4	CL708	*G4	E405	L3	Q302	*A4	R302	*A4	R403	F5	R1028	*G2	RB4	*C2	RB429	K3		
C325	*A3	C619	H3	C906	*N2	CL112	B5	CL709	G4	E406	J3	Q303	*A4	R303	*A4	R404	F5	R1029	*G2	RB5	*C4	RB430	*K3	X101	*B5
C326	A5	C620	H3	C907	N2	CL113	D5	CL710	G4	E501	L5	Q304	*A4	R304	*A3	R405	*K3	R1030	*G2	RB6	*C4	RB431	*K2	X601	J4
C327	A4	C621	H3	C908	*N2	CL114	D5	CL711	*G4	E600	G5	Q305	*C5	R305	*A3	R408	*K3	R1031	*G2	RB7	*C4	RB432	K2	X1101	F3
C328	A3	C622	H3	C909	*J1	CL115	D5	CL712	G4	E601	G3	Q306	B5	R306	*A3	R409	*M3	R1032	*H2	RB8	*C4	RB433	K3		
C329	A3	C623	J4	C910	M3	CL116	D5	CL713	*G4			Q307	*B5	R307	*A3	R411	*K2	R1033	F2	RB9	C2	RB434	K3	*:B SIDE	
C330	*A3	C624	J4	C911	M2	CL117	D5	CL714	G4	F301	*B5			R308	*A4	R412	*K2	R1034	F2	RB10	C2	RB435	*K2		
C331	*D5	C625	J4	C912	M3	CL118	D5	CL715	*G4	F302	*A5	R1	*D3	R309	*A3	R413	*M4	R1035	F2	RB11	*C2	RB436	*K3		
C332	*D5	C626	J4	C1001	*F4	CL119	D5	CL716	G4	F303	*A5	R2	*D2	R310	*A5	R414	*M4	R1036	F2	RB12	*C2	RB437	*L3		
C333	*D5	C627	H5	C1002	F4	CL301	A3	CL717	*G4			R3	*D2	R311	*A5	R415	*K3	R1037	*J2	RB13	*C3	RB438	*K1		

VN-13
SUFFIX: -11

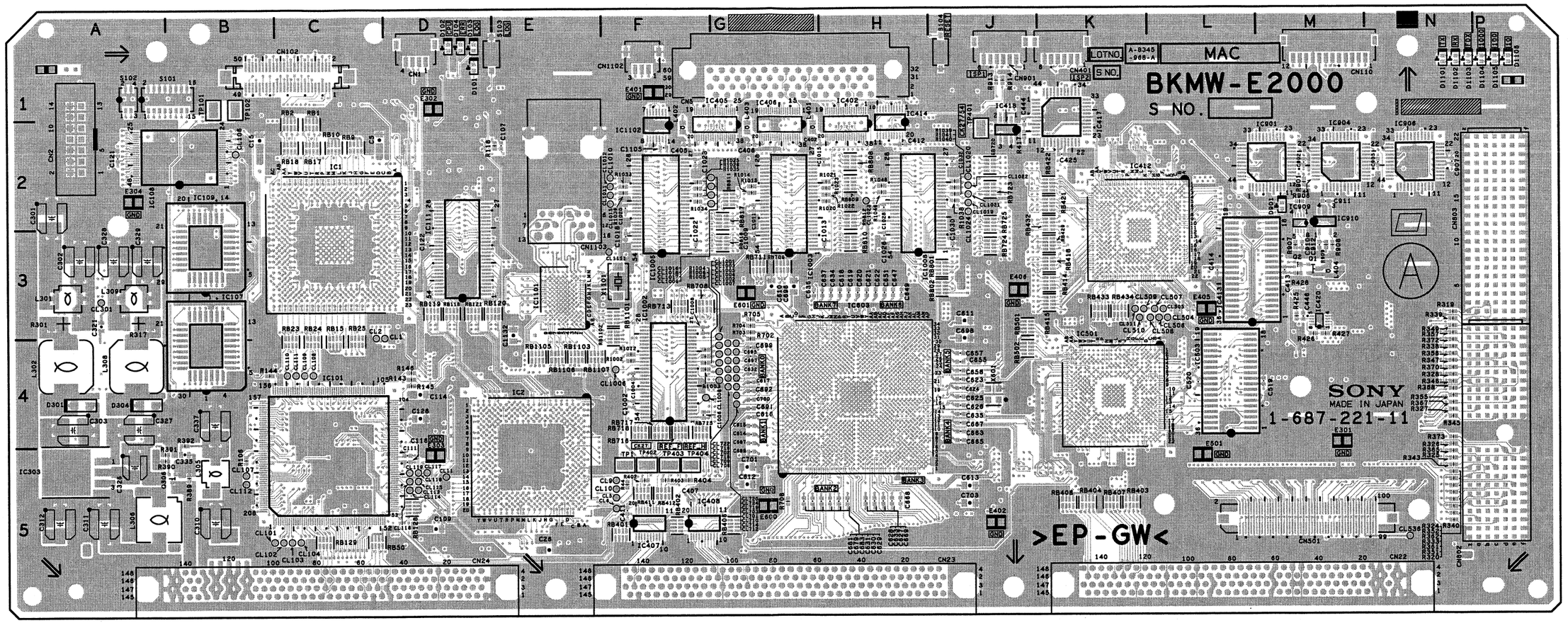

Components locations list; previous page

VN-13 -A SIDE-
SUFFIX: -11
For BKMW-E2000

4-66 (a)

VN-13
SUFFIX: -11

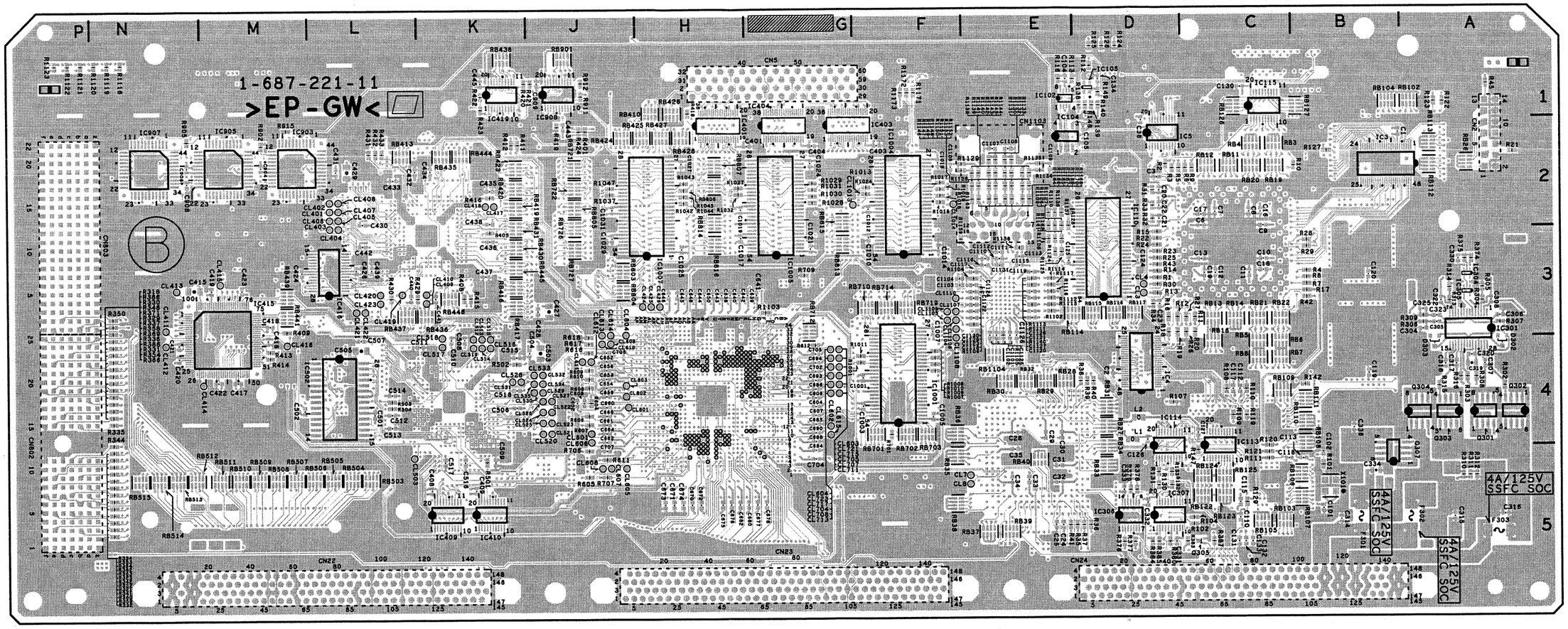

VN-13 -B SIDE-
SUFFIX: -11
For BKMW-E2000

4-67 (a)

VPR-64 (1-677-286-17)

C100	*P5	C220	N4	C547	*P1	C755	F3	C959	L3	C1107	*A2	C1273	D3	C1445	*F5	CL743	F3	D700	F2	IC141	*P3	IC915	*L3	IC1406	F5	Q103	*N5	R110	N5	R223	*P4	R428	L2	R576	*N1
C101	J2	C222	*P5	C548	*P2	C756	F3	C960	*L4	C1108	A2	C1274	*D3	C1446	*F5	CL744	F4	D900	*H4	IC142	*P4	IC916	*L4	IC1407	F5	Q104	*P5	R111	*P5	R224	*P4	R429	L2	R577	*N1
C102	*P5	C223	*N5	C549	*N1	C790	*G3	C961	*L4	C1109	A2	C1275	*D3	C1447	*F5	CL745	F4	D901	*M5	IC143	*P3	IC917	*H4	IC1408	F5	Q105	*P4	R112	N4	R225	*P4	R430	L2	R578	*N1
C103	*P5	C224	N2	C550	*N1	C791	*F4	C962	*L3	C1110	*A2	C1276	*C3	C1448	G5	CL746	G3	D902	*K3	IC144	*P3	IC918	*H4	IC1409	*H5	Q106	*P5	R113	N4	R226	*P4	R431	*K2	R579	*N1
C104	P5	C225	*P3	C551	M1	C792	*G4	C963	*L3	C1111	*A1	C1277	*C3	C1449	*H5	CL747	F4	D903	H3	IC145	*N3	IC919	*J4	IC1413	F5	Q107	*N3	R115	N4	R227	*N5	R432	*K1	R580	*P2
C105	P5	C226	*P3	C552	*N2	C793	*G3	C964	*L3	C1112	*A2	C1278	*C3	C1450	*F5	CL748	G3	D904	J2	IC146	P4	IC920	L3	IC1417	F5	Q108	*N3	R116	*N4	R228	*P5	R433	*K1	R581	*P1
C106	*N5	C227	*N3	C553	*P2	C794	*G4	C968	*L3	C1113	A2	C1279	*C4	C1451	*F5	CL755	G4	D1100	*C1	IC147	N4	IC922	M2	IC1418	F5	Q109	*P4	R117	N3	R229	M3	R435	*M1	R582	*P2
C107	*N5	C228	*N3	C554	*N1	C795	*G3	C969	*L3	C1114	*A2	C1280	*C4	C1452	*F5	CL756	H2	D1101	*B2	IC148	N5	IC923	M3	IC1419	F5	Q110	*P4	R118	*N4	R230	P5	R439	*M2	R583	*P2
C108	P5	C229	*N3	C555	*P1	C796	*G3	C970	*K4	C1115	A2	C1281	*D4	C1505	A5	CL800	G3	D1103	*B1	IC149	N4	IC924	M4	IC1420	E5	Q111	*N5	R119	*N4	R231	P5	R440	M2	R584	*P1
C109	*N5	C230	*N3	C556	*N2	C797	*F3	C971	*L3	C1116	*B2	C1282	*D4	C1507	*A5	CL804	G2	D1200	*D3	IC150	P3	IC925	M4	IC1421	E5	Q112	M2	R120	*N4	R232	N3	R441	*M1	R585	*P2
C110	*N5	C231	*P3	C557	*P2	C800	*J5	C972	*L3	C1117	*B1	C1283	C3	C1508	B5	CL805	G1	D1201	B2	IC151	N3	IC926	*L4	IC1422	E5	Q113	N3	R121	*N4	R233	N3	R443	*K2	R586	*M1
C112	*P5	C232	*P3	C558	*N2	C801	*J5	C973	L4	C1118	*A1	C1284	D4	C1509	*B5	CL806	H3	D1203	*C3	IC152	*P3	IC927	*M3	IC1423	E5	Q114	N5	R122	*N5	R234	J1	R444	K2	R587	*N1
C113	*N4	C233	*P3	C559	*N1	C802	*H5	C974	L4	C1120	*D5	C1285	D4	C1510	B5	CL807	H3	D1204	*C3	IC153	*P3	IC928	*M3	IC1426	G5	Q115	*P2	R123	*N4	R235	*P2	R445	*J1	R588	N2
C114	*N3	C234	*N5	C560	*N2	C803	*H5	C975	M5	C1122	*B1	C1286	D3	C1511	*B5	CL808	H3	D1205	*B3	IC154	*P5	IC929	*M4	IC1427	H5	Q116	*P3	R124	*N5	R236	*P2	R446	*K1	R589	N1
C119	*N4	C235	*P5	C562	*N1	C804	*H5	C976	*K2	C1123	A1	C1287	*C3	C1534	*C4	CL809	G1	D1401	*F5	IC301	K2	IC930	*M5	IC1428	G5	Q117	N3	R125	*N5	R237	*P3	R447	M1	R590	N2
C120	N4	C236	*N3	C564	K1	C805	*F2	C977	*L5	C1124	A1	C1288	*C3	C1535	B5	CL810	G1			IC302	J2	IC931	*M3	IC1429	F5	Q300	*J1	R126	P5	R238	*P3	R448	M2	R591	N2
C121	*N4	C302	K2	C565	*L1	C806	F1	C978	*M5	C1125	*B1	C1289	*C4	C1536	C5	CL811	G1	E101	P4	IC303	J1	IC932	*M3	IC1430	*F5	Q301	*J1	R127	*N4	R239	*P2	R449	J1	R592	N1
C122	*N4	C303	L2	C566	*M1	C807	*F2	C979	M3	C1126	*B1	C1290	D4	C1538	C5	CL812	G1	E300	J1	IC304	*J2	IC933	*M4	IC1431	*F5	Q302	*J1	R128	P5	R240	*P3	R450	*J1	R593	N1
C125	*N4	C305	L1	C567	*L1	C808	F1	C980	M4	C1127	*B1	C1291	*C4	C1539	B5	CL813	G2	E500	*N2	IC305	J1	IC934	*M5	IC1432	G5	Q303	*J1	R130	*P5	R242	*P2	R453	K1	R594	*L1
C127	*N4	C307	*M1	C568	*L1	C809	*F1	C981	*M3	C1128	A2	C1292	*C4	C1540	*A5	CL814	G3	E700	*F4	IC308	K1	IC935	M5	IC1433	*H5	Q304	*J1	R131	N3	R243	*P2	R454	K1	R595	*L1
C129	*N5	C309	*M2	C569	*L1	C810	E2	C982	*M5	C1129	A1	C1293	*C4	C1541	*C5	CL815	G1	E900	L4	IC313	L1	IC936	M5	IC1434	*E5	Q500	*N2	R132	N3	R244	*P3	R500	*N2	R596	M1
C130	*N4	C311	*L2	C570	*L1	C811	*F1	C983	*M2	C1130	A2	C1294	*C4	C1542	B4	CL816	G3	E1200	C3	IC316	K1	IC937	M3	IC1505	*C5	Q501	*P2	R133	N3	R245	*P2	R501	*N2	R597	M1
C131	*N3	C313	*K1	C573	*L1	C812	E2	C984	*M2	C1131	*A2	C1295	*C4	C1543	*D5	CL817	G3	E1201	D1	IC317	K1	IC938	M3	IC1509	*B4	Q502	*N2	R134	N3	R246	*N3	R502	*N2	R598	*N2
C132	N3	C314	*K2	C576	*L1	C813	*F1	C985	*M4	C1134	*A1	C1296	*C4	C1544	B5	CL818	G3			IC319	*J1	IC939	M4	IC1510	*C5	Q503	*P1	R135	*N4	R247	*N5	R504	*P2	R599	*N1
C133	N3	C315	*J1	C577	*M2	C814	E2	C986	*M4	C1135	*D1	C1297	*C4	C1545	*A4	CL819	G3	F1500	B5	IC320	*K1	IC940	M5	IC1511	*D5	Q504	*P2	R136	*N4	R248	N3	R505	P3	R600	*N2
C134	*N3	C316	*K1	C578	*L1	C815	F2	C987	*M3	C1136	*B2	C1298	*C4	C1546	B4	CL820	G3	F1501	B5	IC321	M1	IC941	M5	IC1512	A5	Q505	*N2	R137	*N3	R249	N3	R506	P1	R601	*K1
C135	*N4	C317	*J1	C579	*L2	C816	E2	C988	*M3	C1137	B1	C1299	D4	C1547	B4	CL821	G3	F1502	C5	IC323	K2	IC943	*H4	IC1513	*J2	Q506	P3	R138	*N5	R250	N3	R507	P2	R602	*K1
C136	*P4	C318	K1	C580	*L1	C817	G1	C989	*M4	C1141	C2	C1300	D4	C1548	J2	CL822	G3			IC324	K2	IC944	*K3	IC1514	*A4	Q507	P1	R139	*N4	R251	N3	R508	*N2	R603	*L1
C137	P3	C320	*K1	C581	*L1	C818	E1	C990	*M4	C1142	*C1	C1301	D4	C1549	*A3	CL823	G3	FB1	*J3	IC325	*K1	IC945	*J3	IC1522	*A5	Q508	P2	R140	*P5	R252	*N3	R509	*N2	R604	*L2
C138	*N5	C321	*K1	C582	*L1	C819	*G1	C991	*L3	C1143	*C1	C1302	D4	C1550	*B3	CL824	G3	FB300	*J1	IC326	*J1	IC947	*J3	IC1525	B4	Q509	P2	R142	N3	R253	P5	R510	P1	R605	*L2
C140	P5	C322	*J1	C583	*L2	C820	E1	C992	*M2	C1144	*C2	C1303	D4	C1552	*J2	CL825	G3	FB301	*J1	IC327	*J1	IC949	*L2	IC1526	*B3	Q510	P1	R143	*N4	R254	*P5	R511	*P1	R606	*L1
C141	*N4	C325	*J1	C584	*L1	C821	F2	C993	*M3	C1145	*C1	C1304	C4	C1555	*J2	CL826	G3	FB1201	*C3	IC328	*J2	IC950	J2	IC1527	*B4	Q511	P2	R144	*N4	R255	P5	R512	P2	R607	*L2
C142	*P5	C326	K1	C585	*L2	C822	F2	C994	*M4	C1146	*B1	C1305	*D3	C1556	*A4	CL827	G3	FB1204	*E3	IC502	N2	IC951	*J3	IC1528	*C4	Q512	*M2	R145	*N4	R256	*P5	R513	*P2	R608	*L1
C143	N3	C327	*K1	C586	*L1	C823	F1	C995	*M4	C1147	*C2	C1306	*D4	C1559	*J2	CL828	G3	FB1207	*C3	IC503	M2	IC952	H4	IC1529	*C4	Q513	N2	R146	*N5	R257	P5	R514	*P1	R609	*L1
C144	N3	C328	*K2	C587	N1	C824	F1	C996	*M3	C1148	*B2	C1307	*D4	C1560	B3	CL829	G3			IC504	*N2	IC1100	*B1	IC1530	A5	Q514	*P2	R147	*N4	R258	*N5	R515	*P1	R610	*L1
C145	*P5	C330	*K1	C588	N1	C825	F1	C997	M2	C1149	E4	C1308	*C3	C1561	*B3	CL834	G3	FL100	N5	IC505	*N1	IC1101	*B1	IC1531	B5	Q515	N1	R148	*N4	R259	*N3	R516	*P2	R611	*L1
C146	*N5	C333	*J1	C589	K2	C826	G1	C998	*M3	C1150	*A4	C1309	*D3	C1563	*C4	CL835	G3	FL500	P2	IC506	*N2	IC1103	*A2	IC1532	D5	Q516	*P1	R149	N4	R260	*P5	R517	*N1	R612	*L1
C147	*N4	C335	J2	C590	*K2	C827	F2	C999	*M3	C1151	*A4	C1310	*D3	C1565	*A5	CL836	G3	FL501	P1	IC507	M2	IC1104	D5	IC1533	C5	Q517	N2	R150	*N4	R261	N5	R518	*M1	R613	*L1
C148	*N4	C336	*J1	C593	*M2	C828	*G1	C1000	*M4	C1152	*A4	C1311	*D1	C1568	*A4	CL837	*G1	FL502	P2	IC509	*N1	IC1105	B1	IC1534	C5	Q518	*P2	R151	*P4	R262	N5	R519	*M1	R614	*L2
C149	*N4	C337	*K2	C594	*M2	C829	E1	C1001	*M4	C1153	*E3	C1312	*C3	C1569	*M5	CL838	*G1	FL700	*K5	IC510	*M1	IC1107	B2	IC1535	C5	Q519	*M2	R152	*P4	R304	*L1	R521	M2	R615	*L1
C150	*N4	C338	K2	C595	*L2	C838	*J5	C1002	*M4	C1154	E3	C1313	E3	C1570	M5	CL839	*H1	FL701	*K4	IC511	*L2	IC1113	A2	IC1536	C5	Q520	N2	R153	*P4	R311	*M1	R522	*P3	R616	*L2
C151	*N4	C339	*M2	C596	*L2	C839	*J5	C1003	M4	C1200	*E3	C1314	D2	C1571	L5	CL840	*H1	FL702	*K5	IC513	*L1	IC1114	A1	IC1537	B5	Q521	N1	R154	*P3	R315	L2	R523	P1	R617	*L1
C152	*N4	C340	*M1	C597	N2	C840	*K5	C1004	*L3	C1203	*D4	C1315	*D2	C1572	*L5	CL841	*G1	FL703	*K5	IC514	*P2	IC1117	*B1	IC1538	*A5	Q522	N2	R155	*P4	R316	K2	R524	P2	R618	*L2
C154	*P4	C341	*M2	C598	*M2	C849	*F4	C1005	*M2	C1204	*D4	C1316	*E2	C1573	B3	CL842	*G1	FL800	*K5	IC515	*L2	IC1118	D2	IC1539	*A4	Q523	*L2	R156	*P5	R317	L2	R525	*P3	R620	*L1
C155	*P5	C342	L2	C599	*L1	C850	*G3	C1006	*M3	C1205	*E4	C1319	*P4	C1575	C5	CL843	*G1	FL801	*K5	IC516	*P1	IC1119	D1	IC1540	J2	Q524	*L1	R157	*P5	R318	L2	R526	*P3	R621	*L2
C156	*N3	C344	*M2	C600	*M2	C851	*G3	C1007	*M4	C1206	*E3	C1320	*P4	C1577	*C5	CL844	*G1	FL802	*K5	IC517	*P2	IC1120	A2	IC1541	D5	Q525	*L2	R159	*P4	R332	*M1	R527	P1	R623	*L1
C158	*N3	C346	L2	C601	M2	C852	*F3	C1008	*M4	C1207	*C3	C1321	*P4	C1578	B5	CL845	*G1	FL900	M3	IC518	*N1	IC1121	C2	IC1542	L5	Q526	*L1	R160	*P5	R333	*K1	R528	P2	R624	N1
C160	N3	C348	M1	C602	*M2	C853	E4	C1014	*L4	C1208	*D4	C1322	*E4	C1579	*D4	CL846	*G1	FL901	M3	IC519	M1	IC1122	C1	IC1543	L5	Q527	*L2	R162	*P3	R335	*K1	R529	P3	R625	N2
C161	N3	C350	*L2	C603	N1	C854	*F4	C1015	*M3	C1209	*E3	C1323	*E4	C1590	*B5	CL847	*H3	FL902	M4	IC520	*K1	IC1123	*C2	IC1544	*M5	Q528	*L2	R163	*P4	R336	*K1	R530	P1	R626	*L1
C162	*P5	C352	K1	C604	*N1	C855	E4	C1016	*M3	C1210	*E4	C1324	*P4	C1591	*B5	CL848	*H3	FL903	M4	IC521	*M1	IC1124	C2	IC1545	B3	Q700	*D4	R164	*N3	R339	*K1	R531	P2	R627	*L1
C163	*P4	C356	K1	C605	*M2	C856	*F4	C1017	*M4	C1211	*D3	C1325	*P4			CL849	*H3	FL1400	*E5	IC522	*K2	IC1125	C1	IC1546	B5	Q900	*M5	R165	*P4	R340	K1	R532	*N1	R628	*L1
C166	*P3	C358	*K1	C606	N2	C857	F3	C1018	*M4	C1213	*C3	C1326	E2	CL300	M1	CL850	*H3	FL1401	*E5	IC523	*M2	IC1126	*C1	IC1547	*C4	Q901	*M5	R166	*P4	R343	*K1	R533	N2	R629	*L1
C167	*P3	C359	*K1	C608	*P1	C858	F3	C1019	*L5	C1214	*E4	C1400	*P5	CL301	L1	CL851	*H3	FL1402	*E5	IC524	*M2	IC1127	C2	IC1548	*C3	Q902	*H3	R167	*N2	R344	K1	R534	P1	R630	*L1
C168	*P4	C360	*K1	C609	M2	C859	E3	C1028	*L5	C1215	*C3	C1401	*P5	CL302	L1	CL852	*H3	FL1403	*E5	IC525	*M1	IC1128	C1			Q903	*H3	R168	*N3	R345	K1	R535	P2	R631	*L1
C170	*N4	C362	*J2	C610	*N1	C860	E3	C1037	*M5	C1216	*D3	C1402	*E5	CL303	L1	CL853	*H3	FL1404	*E5	IC526	*N1	IC1129	*B1	L101	*N5	Q904	*J3	R169	*P4	R346	K1	R536	*N2	R632	*K2
C171	P3	C364	*J1	C611	*N1	C901	H3	C1038	*M5	C1217	*D3	C1403	*E5	CL705	G1	CL854	*H3	FL1405	*E5	IC700	G3	IC1130	*E4	L102	*N5	Q905	*J3	R170	*N3	R347	*J1	R537	*N2	R633	*K2
C172	*P4	C365	K2	C612	*M2	C903	*H3	C1039	*M5	C1218	*E3	C1404	*E5	CL706	G1	CL855	*G1	FL1406	H5	IC701	G2	IC1131	*E3	L104	*N3	Q906	*M3	R171	*P4	R348	K1	R538	P1	R634	*L2
C175	*N3	C366	K2	C613	*M2	C904	J3	C1040	*M5	C1220	*C3	C1405	*E5	CL707	H2	CL856	*G1	FL1407	H5	IC702	L5	IC1132	*E3	L105	*N3	Q907	*M3	R172	*P4	R349	K1	R539	P2	R635	*K2
C176	*P4	C367	M1	C614	*M2	C905	H3	C1041	*M3	C1221	E3	C1406	*P5	CL708	H2	CL857	*H2	FL1408	H5	IC703	L5	IC1134	*E3	L106	*N3	Q908	*M4	R173	*N3	R350	*J1	R540	P2	R636	*L2
C177	*P3	C503	*M2	C700	*L4	C907	*J4	C1042	*M3	C1222	*D3	C1407	*P5	CL709	H2	CL858	*H2	FL1409	H5	IC704	L5	IC1200	*E3	L107	*N3	Q909	*M5	R174	*P4	R351	*J1	R541	P1	R637	*L2
C178	*N3	C504	*M1	C701	*L5	C908	*K3	C1043	*M4	C1223	*D4	C1408	*H5	CL710	H1	CL859	*H3	FL1410	H5	IC705	K5	IC1201	*D4	L500	*N2	Q1100	*A2	R175	*N4	R352	*J1	R542	P2	R638	*L2
C179	*N3	C506	*P2	C702	*L5	C911	*K3	C1045	*M3	C1224	*D3	C1410	*G5	CL711	H1	CL860	*H2	FL1411	G5	IC707	*F2	IC1202	*E4	L700	*F2	Q1101	*A2	R176	*N4	R353	*K2	R543	N2	R639	*L2
C180	*P3	C507	*N2	C703	*K4	C912	*J3	C1046	*M3	C1225	*D4	C1411	*G5	CL712	H1	CL900	J3	FL1412	H5	IC708	K5	IC1204	*D4	L900	*J2	Q1102	*A1	R177	*N3	R354	*K2	R544	P1	R640	*L2
C181	*P4	C509	*N2	C704	*F2	C915	*J4	C1047	*M3	C1227	*D4	C1412	*G5	CL713	H1	CL901	J4	FL1413	G5	IC709	K5	IC1212	E4	L903	*L3	Q1103	*A1	R178	*P3	R355	*K2	R545	P2	R641	*L2
C182	P4	C510	*N2	C714	*K5	C916	*K3	C1048	*M3	C1228	*E3	C1413	*H5	CL715	H2	CL902	K4	FL1414	*G5	IC710	K5	IC1214	*D3	L904	K2	Q1104	*A2	R179	*N3	R356	*K1	R546	*M2	R643	*L2
C183	*P5	C511	*P2	C715	*K4	C917	*K3	C1049	*M4	C1229	*C3	C1415	*G5	CL716	H2	CL906	M5	FL1415	H5	IC711	K5	IC1216	E4	L905	*L5	Q1105	*A2	R180	*N3	R357	J1	R547	*N2	R644	N2
C185	*P4	C512	P1	C716	*K5	C918	*J3	C1050	*M4	C1231	*D3	C1416	*G5	CL717	G1	CL1205	D4			IC712	*F1	IC1220	C3	L906	*M5	Q1107	*A4	R181	*N3	R358	J1	R548	M2	R645	*M2
C186	*P3	C513	P2	C717	*K5	C919	*J4	C1052	*M5	C1232	*D4	C1417	*G5	CL718	H2	CL1206	D4	IC100	*P5	IC713	*E2	IC1221	C3	L907	M2	Q1200	*E3	R182	*P5	R359	J1	R550	*M2	R646	*P1
C187	*N3	C514	*P3	C718	*G1	C921	*K3	C1053	*M5	C1233	*C4	C1418	*H5	CL719	G3	CL1207	E4	IC101	J2	IC714	*F3	IC1226	D3	L908	M4	Q1201	*E3	R183	*P3	R360	J1	R551	N2	R647	N1
C189	*P4	C515	*P1	C719	*G2	C923	*K3	C1054	*M5	C1234	*E4	C1420	*G5	CL720	G3	CL1500	J2	IC103	N5	IC715	E2	IC1230	*C4	L909	M3	Q1204	*E2	R184	*P4	R361	*J2	R552	*P2	R648	N1
C191	*N3	C516	*P2	C720	*H2	C924	*J4	C1055	*M5	C1235	E3	C1421	*G5	CL721	G3			IC104	N4	IC716	*E1	IC1231	*D2	L910	M4	Q1205	*B2	R185	*N2	R362	*K2	R553	N1	R651	*M1
C192	*P4	C517	M2	C721	*H1	C925	*J4	C1056	*M5	C1236	*E2	C1422	*G5	CL722	G3	CN1	B3	IC107	P5	IC717	*F1	IC1232	*C3	L911	M3	Q1206	*C2	R186	*N2	R363	*J2	R554	*P1	R652	*L1
C193	*N3	C518	*P3	C722	*H1	C926	*J4	C1057	*M5	C1237	C3	C1423	*P5	CL723	G3	CN25	M6	IC109	*N4	IC801	J5	IC1234	*D3	L912	M5	Q1207	*D3	R194	*N3	R364	*J2	R555	N2	R653	*N2
C195	*N3	C519	*P3	C723	*G2	C927	*J4	C1060	*L2	C1238	C2	C1424	*H5	CL724	G3	CN26	H6	IC110	N3	IC802	J5	IC1235	*B3	L913	*L5	Q1208	*D3	R195	*N3	R365	*J1	R556	*P2	R654	*M1
C196	*N3	C520	P1	C724	*G2	C928	*J4	C1061	L2	C1239	E4	C1426	*G5	CL725	G3	CN27	C6	IC112	P4	IC803	J5	IC1236	C2	L914	L3	Q1209	*D3	R196	*P4	R366	*J1	R557	N2	R655	*M1
C197	*N3	C521	P2	C725	*G2	C929	H4	C1062	*H2	C1241	*E3	C1427	*G5	CL726	F3	CN700	D1	IC113	*N3	IC804	J5	IC1237	*C2	L1100	A2	Q1210	*D3	R197	*P4	R368	M1	R558	N1	R656	*M2
C198	N3	C522	*N1	C726	*H2	C930	*J4	C1063	K3	C1242	D2	C1428	*G5	CL727	F3			IC114	*P5	IC805	H5	IC1238	*D3	L1101	A2	Q1211	*D3	R198	*N3	R377	M1	R559	N2	R657	*M2
C199	N3	C523	*N2	C727	*H2	C931	*H4	C1064	K3	C1245	*D3	C1429	*H5	CL728	F3	D100	*N4	IC115	*P4	IC806	*F1	IC1239	*C3	L1102	*A2	Q1212	*B2	R199	*N3	R378	M1	R560	*P2	R658	*M2
C201	*P4	C524	P2	C728	*G2	C932	J2	C1065	K2	C1246	C2	C1431	*G5	CL729	F3	D101	*P4	IC116	*N4	IC807	*F1	IC1240	*D3	L1104	*E4	Q1500	*J2	R201	*N3	R399	L2	R561	*P1	R659	*M2
C202	*P4	C525	P1	C729	*H2	C935	*J2	C1066	*J3	C1249	*D3	C1432	*G5	CL730	F3	D102	*P5	IC117	P4	IC808	F1	IC1241	*D4	L1200	*B3	Q1501	*D4	R202	*P4	R407	K1	R562	*P1	R700	*L5
C203	*P4	C526	P2	C730	*G1	C937	*H4	C1067	*K3	C1250	C2	C1433	*G5	CL731	F3	D103	*J1	IC118	*N3	IC809	J5	IC1243	*D4	L1201	*D4	Q1590	*B5	R203	*P4	R409	K1	R564	*M2	R701	*J2
C207	*N2	C528	*M2	C731	*G2	C938	*L3	C1068	*J3	C1251	C2	C1434	*P5	CL732	F3	D104	*N4	IC119	P3	IC810	J5	IC1244	E3	L1202	*D4	Q1591	*C5	R204	*P4	R410	K1	R565	*N2	R703	*G2
C208	*P3	C537	*M1	C732	*H1	C940	*L3	C1069	*L4	C1252	B2	C1435	*P5	CL733	F3	D300	*K1	IC120	N3	IC811	K5	IC1245	*B3	L1203	*D4			R207	*P4	R411	K1	R566	*N1	R706	*G1
C209	P3	C538	*P2	C733	*G1	C942	*H4	C1070	L3	C1254	B3	C1436	*H5	CL734	F3	D301	*K1	IC121	P4	IC813	E4	IC1247	*D2	L1204	*D4	R100	N5	R214	*N3	R412	*K1	R567	*N1	R708	*F1
C210	*P3	C539	*P1	C734	*G2	C944	*H4	C1071	*L3	C1256	C3	C1437	*G5	CL735	F3	D302	*K1	IC122	P5	IC901	H3	IC1248	*D1	L1205	*C4	R101	N5	R215	*P4	R414	*K1	R568	*M2	R711	K4
C212	*P3	C540	*P2	C735	*G2	C945	*H4	C1072	J3	C1258	*C2	C1438	*G5	CL736	F3	D303	*K2	IC126	P5	IC902	J3	IC1249	D1	L1206	D4	R102	P5	R216	*P4	R415	*K1	R569	*M1	R712	*G1
C213	*P3	C541	*P2	C736	*E2	C947	J4	C1100	*C1	C1259	D3	C1439	*G5	CL737	F3	D304	*K2	IC129	P4	IC903	*H4	IC1250	*D2			R103	*N3	R217	*P4	R416	*K1	R570	*M1	R713	F1
C214	*P3	C542	*P1	C739	E2	C948	*J4	C1102	B1	C1261	*B2	C1440	*G5	CL738	F3	D500	*P2	IC130	*N4	IC906	*K3	IC1251	C2	OSC1	*C3	R104	P5	R218	*P4	R420	*K1	R571	*M1	R722	*G4
C215	*P3	C543	*P2	C751	*F1	C950	*J4	C1103	C1	C1265	*B3	C1441	*G5	CL739	F3	D501	*P1	IC132	P4	IC910	*J3	IC1252	*D2			R105	*P3	R219	*P4	R421	*K1	R572	*M1	R727	*D4
C216	*P4	C544	*M1	C752	*F1	C952	*L4	C1104	*B1	C1266	*C3	C1442	G5	CL740	F3	D502	*P2	IC134	P3	IC912	*H4	IC1253	*D2	Q100	P5	R106	P5	R220	*P4	R422	*K2	R573	*M1	R729	*F3
C217	N4	C545	*M1	C753	*E2	C955	*L4	C1105	*C1	C1267	*C2	C1443	H5	CL741	F3	D503	N2	IC139	*N5	IC913	*L3	IC1256	*F4	Q101	P5	R107	*N5	R221	N3	R423	*J2	R574	*N2	R733	*F4
C219	*N4	C546	*P2	C754	*F3	C956	*L4	C1106	*B1	C1272	D4	C1444	G5	CL742	F3	D504	*N1	IC140	*P3	IC914	*L3	IC1401	F5	Q102	*P5	R108	*N5	R222	*P4	R427	*J2	R575	*N2	R734	*F4

R735	*G4	R995	M4	R1101	*A2	R1255	*D3	R1354	D5	R1517	*D5	TP902	H1
R736	*G2	R996	*M3	R1102	*A2	R1256	*D3	R1355	D5	R1518	*D5	TP903	G1
R740	L5	R997	M3	R1103	*A2	R1257	*D3	R1356	D3	R1519	*A5	TP904	G1
R741	*F1	R998	M4	R1104	*A2	R1258	*D3	R1381	E4	R1520	*A5	TP905	G1
R742	*E3	R999	*M5	R1105	*A2	R1259	*C3	R1382	E3	R1521	B4	TP906	F1
R743	*E3	R1000	M3	R1106	*A2	R1260	*D3	R1383	D3	R1522	B4	TP907	F1
R744	F3	R1001	M3	R1107	A2	R1261	*D4	R1384	D3	R1523	B4	TP908	M3
R745	F3	R1002	M4	R1108	*A2	R1262	*D3	R1385	*C3	R1524	B4	TP909	M3
R746	F3	R1003	M5	R1109	A1	R1263	*D3	R1386	E3	R1525	*J2	TP910	M4
R747	F3	R1004	M3	R1110	*A1	R1264	*C3	R1387	*B2	R1526	*J2	TP911	M5
R748	F3	R1005	M3	R1111	*A1	R1266	*E3	R1388	*F4	R1527	*J2	TP1100	A2
R749	*E1	R1006	M4	R1112	*A1	R1267	*D4	R1389	*F4	R1530	*C5	TP1200	E1
R750	*G4	R1007	M4	R1113	*A1	R1269	*D4	R1390	*E4	R1531	*C5	TP1201	E1
R751	*G4	R1008	*M3	R1114	*A1	R1270	*E3	R1391	*D4	R1532	*C5		
R752	*G4	R1009	*M3	R1115	*A1	R1271	*E4	R1392	*D4	R1533	*C5	X300	J1
R753	*E2	R1010	*M3	R1116	*A1	R1272	*E3	R1393	*F4	R1534	*C5	X301	J1
R754	*E2	R1011	*M3	R1117	*B1	R1274	C2	R1394	*C3	R1535	*C5	X302	*J2
R755	E4	R1012	*M4	R1118	*B1	R1275	D3	R1401	*G5	R1536	*D5	X900	*J3
R800	*F2	R1013	*M4	R1119	*B1	R1276	D3	R1402	*G5	R1537	*D5	X901	*K3
R801	*E1	R1014	*M4	R1120	A2	R1277	D3	R1403	*G5	R1538	A4	X1203	*C3
R802	E1	R1015	*M5	R1121	*A2	R1278	D2	R1404	*F5	R1539	A5	X1204	D3
R803	G1	R1016	*M2	R1122	*B1	R1279	D2	R1405	*F5	R1540	A4	X1205	D3
R804	*G3	R1017	*M3	R1124	*A2	R1280	C2	R1406	*H5	R1541	A5	X1206	*C3
R805	*F4	R1018	*M4	R1126	*A2	R1281	C2	R1407	*H5	R1542	*B5		
R806	E3	R1019	*M4	R1127	*B2	R1282	*D2	R1409	*G5	R1543	*B5	*:B SIDE	
R807	*H5	R1020	*M2	R1129	*B2	R1283	*D2	R1410	*G5	R1544	*D5		
R901	H3	R1021	*M3	R1130	*B1	R1284	B2	R1411	*G5	R1545	*D5		
R905	*H3	R1022	*M4	R1132	*B2	R1285	C2	R1412	*F5	R1546	*D5		
R906	*H3	R1023	*M4	R1135	*A2	R1286	C2	R1413	*F5	R1547	*D5		
R907	*H3	R1024	*M2	R1136	*A2	R1287	C2	R1414	*F5	R1548	L5		
R908	*J4	R1025	*M3	R1138	*A2	R1288	*D2	R1415	*F5	R1549	M5		
R909	*J4	R1026	*M4	R1139	*C2	R1289	C3	R1416	*H5	R1550	M5		
R910	*J4	R1027	*M4	R1140	*C2	R1290	C3	R1418	*G5	R1551	L5		
R911	*J4	R1028	*L3	R1141	*C2	R1291	*E2	R1419	*G5	R1552	M5		
R912	*J4	R1029	*M3	R1142	*C2	R1292	*E2	R1420	*G5	R1553	L5		
R913	*J4	R1030	*M3	R1143	C2	R1293	C3	R1421	*F5	R1554	*D4		
R914	*J4	R1031	*M3	R1144	C2	R1294	C3	R1422	*F5	R1555	*C5		
R915	*H4	R1032	*M3	R1145	C2	R1295	*C2	R1423	*H5	R1556	*D4		
R916	*J3	R1033	*M4	R1146	B2	R1296	*C2	R1424	*H5	R1557	*A4		
R917	*K4	R1034	*M4	R1148	*D5	R1297	*C2	R1427	*G5	R1558	*B5		
R918	*K4	R1035	*M5	R1149	E3	R1298	C3	R1428	*G5	R1590	*B5		
R919	*K4	R1036	*M4	R1150	*E3	R1299	*B2	R1429	*G5	R1591	*B5		
R921	*K4	R1037	*L4	R1151	*A2	R1300	*B2	R1430	*G5	R1592	*B5		
R924	H4	R1038	*L4	R1152	E3	R1301	*B2	R1431	*G5	R1593	*C5		
R925	H3	R1039	*L5	R1153	*C2	R1302	*C2	R1432	*G5	R1594	*D4		
R926	*H3	R1040	*L5	R1154	B3	R1303	*C2	R1433	*H5				
R927	*H3	R1041	*L5	R1155	B3	R1304	*C2	R1435	*G5	RB700	*L5		
R932	*J4	R1042	*M3	R1156	B3	R1305	*C3	R1436	*G5	RB701	*L5		
R933	*J4	R1043	*M3	R1157	C3	R1310	D4	R1437	*G5	RB702	*K4		
R934	*J4	R1044	*M4	R1161	*A4	R1311	C4	R1438	*G5	RB703	*L5		
R935	*K4	R1045	*M5	R1200	E3	R1312	D4	R1439	*G5	RB704	*L5		
R938	*K4	R1046	*M5	R1201	E3	R1313	C4	R1440	*G5	RB705	*L4		
R939	*K4	R1047	*M5	R1202	E3	R1314	*D3	R1441	*G5	RB719	*K5		
R953	*J3	R1048	*M5	R1203	E3	R1315	*D3	R1442	*G5	RB720	*E2		
R954	*J3	R1049	*M3	R1204	*E3	R1316	*D3	R1443	*G5	RB800	*J5		
R955	*H4	R1050	*M3	R1209	D4	R1317	*C2	R1444	*F5	RB801	*J5		
R956	*J3	R1051	*M4	R1210	D3	R1318	C2	R1445	*F5	RB802	*J5		
R957	*K4	R1052	*M3	R1211	D3	R1319	*C2	R1446	*G5	RB803	*J5		
R960	*J4	R1053	*M3	R1212	C4	R1320	*C2	R1447	*G5	RB804	*H5		
R961	*J4	R1054	*M4	R1213	C4	R1321	*C2	R1448	*G5	RB805	*J5		
R962	*L4	R1055	*M5	R1214	C4	R1322	*C2	R1449	*G5	RB806	*J5		
R963	*L3	R1056	*M5	R1215	C4	R1323	*C2	R1450	H5	RB807	*J5		
R964	*L4	R1057	*M5	R1216	C4	R1324	*C2	R1451	*F5	RB808	*J5		
R965	*J4	R1058	*M5	R1217	C4	R1325	*D4	R1452	*E5	RB809	*H5		
R966	*L4	R1061	M3	R1218	C4	R1326	*D4	R1453	*E5	RB1100	*D5		
R967	*L3	R1062	M3	R1219	C4	R1327	*C3	R1454	*E5	RB1101	*D5		
R968	*L4	R1063	M4	R1220	*C4	R1328	*C3	R1455	*E5	RB1500	*C5		
R969	*L4	R1064	M5	R1221	*C4	R1329	*C3	R1456	*E5	RB1501	*D4		
R970	*L3	R1065	M5	R1222	*C4	R1330	*D3	R1457	*G5	RB1502	C5		
R971	*L4	R1066	M5	R1223	C3	R1331	*D3	R1458	*G4	RB1503	D5		
R972	*J4	R1069	*K3	R1225	C3	R1332	*D2	R1459	G5	RB1504	*B4		
R973	*J4	R1070	*J3	R1226	D3	R1333	*D2	R1460	F4	RB1505	*B4		
R974	*J4	R1072	G1	R1227	*D4	R1334	*C2	R1461	F5	RB1506	*A4		
R975	*L4	R1073	F1	R1231	*D3	R1335	*D2	R1462	G5	RB1507	*A4		
R976	*L4	R1074	K4	R1232	*D3	R1336	C3	R1463	F5	RB1508	*B5		
R977	*L4	R1075	K4	R1236	*E3	R1337	*D3	R1500	D5	RB1509	*B5		
R979	*M5	R1076	L4	R1237	*E4	R1338	*D3	R1501	D5				
R980	*M5	R1077	*M5	R1238	*D4	R1339	*D3	R1502	*D4	RV1	N3		
R981	*M5	R1078	*M5	R1239	*C3	R1340	*D1	R1503	*C5	RV2	P3		
R982	*M3	R1079	*K3	R1240	*D3	R1341	*C4	R1504	*C5				
R983	*M4	R1080	*J3	R1242	*D4	R1342	*C3	R1505	*C5	TH100	*E3		
R984	*M4	R1081	*J3	R1243	*D3	R1343	*C4	R1506	*C5				
R985	*M5	R1082	*H4	R1244	*C3	R1344	*C3	R1507	*C5	TP103	P3		
R986	M3	R1083	*M3	R1245	*E4	R1345	*D2	R1508	*C5	TP105	J1		
R987	M3	R1084	*M3	R1246	*C3	R1346	*D2	R1509	*C5	TP300	J1		
R988	M4	R1085	*M3	R1247	*C3	R1347	*D4	R1510	*C5	TP503	N2		
R989	M5	R1086	*M3	R1248	*D3	R1348	*D4	R1511	*C5	TP504	N1		
R990	M3	R1087	*M4	R1249	*D3	R1349	*C4	R1512	*C5	TP505	N1		
R991	M3	R1088	*M4	R1250	*D3	R1350	*C4	R1513	*D5	TP506	N1		
R992	M3	R1089	*M5	R1252	*C3	R1351	*D4	R1514	*D5	TP800	F3		
R993	M4	R1090	*M5	R1253	*D3	R1352	*C4	R1515	*D5	TP900	H1		
R994	M4	R1091	*L4	R1254	*E3	R1353	*C4	R1516	*D5	TP901	H1		

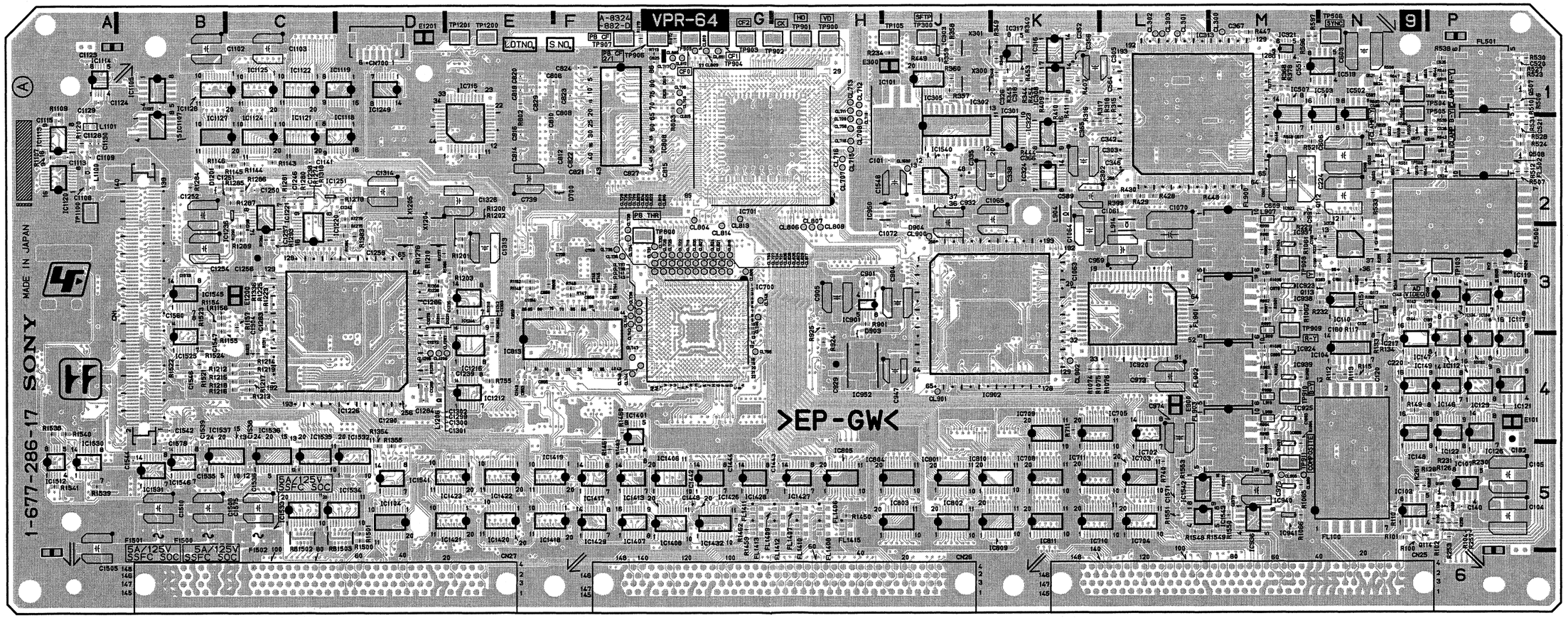

Components locations list; previous page

VPR-64 -A SIDE-
SUFFIX: -17

VPR-64
SUFFIX: -17

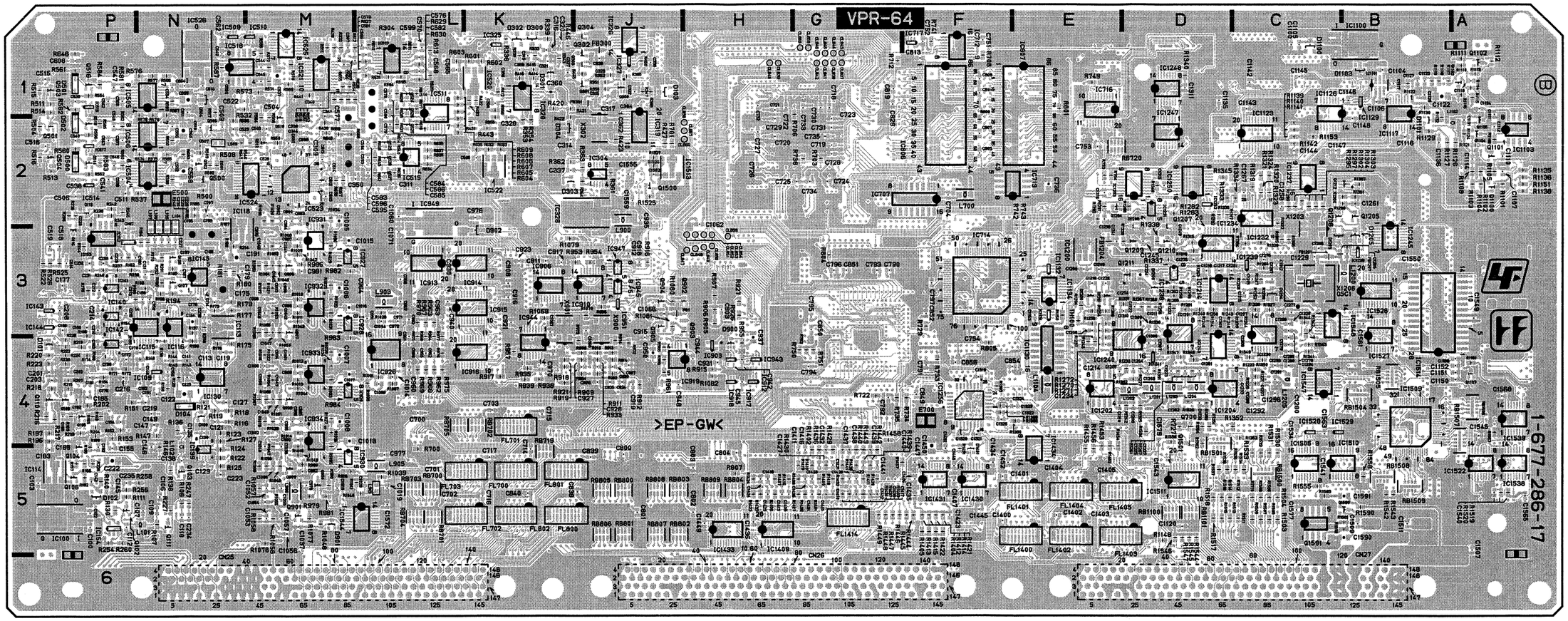

VPR-64 -B SIDE-
SUFFIX: -17

4-71 (b)

VPR-64 **SUFFIX: -15**

VPR-64 (1-677-286-15)

C100	*P5	C219	*N4	C547	*P1	C756	F3	C959	*L3	C1104	*B1	C1261	*B2	C1441	*G5	CL739	F3	D901	*M5	IC147	N4	IC924	M4	IC1421	E5	Q110	*P4	R119	*N4	R235	*P2	R502	*N2	R602	*K1
C102	*P5	C220	N4	C548	*P2	C790	*G3	C960	*L4	C1105	*C1	C1265	*B3	C1442	G5	CL740	F3	D903	H3	IC148	N5	IC925	M4	IC1422	E5	Q111	*N5	R120	*N4	R236	*P2	R504	*P2	R603	*L1
C103	*P5	C222	*P5	C549	*N1	C791	*F4	C961	*L4	C1107	*A2	C1266	*C3	C1443	H5	CL741	F3	D1100	*C1	IC149	N4	IC926	*L4	IC1423	E5	Q112	M2	R121	*N4	R237	*P3	R505	P3	R604	*L2
C104	P5	C223	*N5	C550	*N1	C792	*G4	C962	*L3	C1108	A2	C1267	*C2	C1444	G5	CL742	F3	D1101	*B2	IC150	P3	IC927	*M3	IC1426	G5	Q113	N3	R122	*N5	R238	*P3	R506	P1	R605	*L2
C105	P5	C224	N2	C551	M1	C793	*G3	C963	*L3	C1109	A2	C1272	D4	C1445	*F5	CL743	F3	D1102	B2	IC151	N3	IC928	*M3	IC1427	H5	Q114	N5	R123	*N4	R239	*P2	R507	P2	R606	*L1
C106	*N5	C225	*P3	C552	*N2	C794	*G4	C964	*L3	C1110	*A2	C1273	D3	C1446	*F5	CL744	F4	D1200	*D3	IC152	*P3	IC929	*M4	IC1428	G5	Q115	*P2	R124	*N5	R240	*P3	R508	*N2	R607	*L2
C107	*N5	C226	*P3	C553	*P2	C795	*G3	C968	*L3	C1111	*A1	C1274	*D3	C1447	*F5	CL745	F4	D1201	B2	IC153	*P3	IC930	*M5	IC1429	F5	Q116	*P3	R125	*N5	R242	*P2	R509	*N2	R608	*L1
C108	P5	C227	*N3	C554	*N1	C796	*G3	C969	*L3	C1112	*A2	C1275	*D3	C1448	G5	CL746	G3	D1203	*C3	IC301	J2	IC931	*M3	IC1430	*F5	Q117	N3	R126	P5	R243	*P2	R510	P1	R609	*L1
C109	*N5	C228	*N3	C555	*P1	C797	*F3	C970	*K4	C1113	A2	C1276	*C3	C1449	*H5	CL747	F4	D1204	*C3	IC302	J2	IC932	*M3	IC1431	*F5	Q300	*J1	R127	*N4	R244	*P3	R511	*P1	R610	*L1
C110	*N5	C229	*N3	C556	*N2	C800	*J5	C971	*L3	C1114	*A2	C1277	*C3	C1450	*F5	CL748	G3	D1401	*F5	IC303	J1	IC933	*M4	IC1432	G5	Q301	*J1	R128	P5	R245	*P2	R512	P2	R611	*L1
C112	*P5	C230	*N3	C557	*P2	C801	*J5	C972	*L3	C1115	A2	C1278	*C3	C1451	*F5	CL755	G4			IC304	*J2	IC934	*M5	IC1433	*H5	Q302	*J1	R130	*P5	R246	*N3	R513	*P2	R612	*L1
C113	*N4	C231	*P3	C558	*N2	C802	*H5	C973	*L3	C1116	*B2	C1279	*C4	C1452	*F5	CL756	H2	E101	P4	IC305	J1	IC935	M5	IC1434	*E5	Q303	*J1	R131	N3	R247	*N5	R514	*P1	R613	*L1
C114	*N3	C232	*P3	C559	*N1	C803	*H5	C974	*L4	C1118	*A1	C1280	*C4	C1505	A5	CL800	G3	E300	J1	IC308	K1	IC936	M5	IC1505	*C5	Q304	*J1	R132	N3	R248	N3	R515	*P1	R614	*L2
C119	*N4	C233	*P3	C560	*N2	C804	*H5	C975	M5	C1120	*D5	C1281	*D4	C1507	*A5	CL804	G2	E500	*N2	IC313	L1	IC937	M3	IC1509	*B4	Q500	*N2	R133	N3	R249	N3	R516	*P2	R615	*L1
C120	N4	C234	*N5	C562	*N1	C805	*F2	C976	*K2	C1122	*B1	C1282	*D4	C1508	B5	CL805	G1	E700	*F4	IC316	K1	IC938	M3	IC1510	*C5	Q501	*P2	R134	N3	R250	N3	R517	*N1	R616	*L2
C121	*N4	C302	K2	C564	*L1	C806	F1	C977	*L5	C1123	A1	C1283	C3	C1509	*B5	CL806	H3	E900	L4	IC317	K1	IC939	M4	IC1511	*D5	Q502	*N2	R135	*N4	R251	N3	R521	M2	R617	*L1
C122	*N4	C303	L2	C565	*L1	C807	*F2	C978	*M5	C1124	A1	C1284	D4	C1510	B5	CL807	H3	E1200	C3	IC319	*J1	IC940	M5	IC1512	A5	Q503	*P1	R136	*N4	R252	*N3	R522	*P3	R618	*L2
C125	*N4	C305	L1	C566	*M1	C808	F1	C979	M3	C1125	*B1	C1285	D4	C1511	*B5	CL808	H3	E1201	D1	IC320	*K1	IC941	M5	IC1513	*J2	Q504	*P2	R137	*N3	R304	*L1	R523	P1	R620	*L1
C126	*N4	C307	*M1	C567	*L1	C809	*F1	C980	M4	C1126	*B1	C1286	D3	C1534	*C4	CL809	G1			IC321	M1	IC943	*H4	IC1514	*A4	Q505	*N2	R138	*N5	R311	*M1	R524	P2	R621	*L2
C127	*N4	C309	*M2	C568	*L1	C810	E2	C981	*M3	C1127	*B1	C1287	*C3	C1535	B5	CL810	G1	F1500	B5	IC323	K2	IC944	*K3	IC1522	*A5	Q506	P3	R139	*N4	R315	L2	R525	*P3	R623	*L1
C129	*N5	C311	*L2	C569	*L1	C811	*F1	C982	*M5	C1128	A2	C1288	*C3	C1536	C5	CL811	G1	F1501	B5	IC324	K2	IC945	*J3	IC1525	B4	Q507	P1	R140	*P5	R316	K2	R526	*P3	R624	N1
C130	*N4	C313	*K1	C570	*L1	C812	E2	C983	*M2	C1129	A1	C1289	*C4	C1538	C5	CL812	G1	F1502	C5	IC325	*K1	IC947	*J3	IC1526	*B3	Q508	P2	R142	N3	R317	L2	R527	P1	R625	N2
C131	*N3	C314	*K2	C573	*L1	C813	*F1	C984	*M2	C1130	A2	C1290	D4	C1539	B5	CL813	G2			IC326	*J1	IC949	*L2	IC1527	*B4	Q509	P2	R143	*N4	R318	L2	R528	P2	R626	*L1
C132	N3	C315	*J1	C576	*L1	C814	E2	C985	*M4	C1131	*A2	C1291	*C4	C1540	*A5	CL814	G3	FB1	*J3	IC327	*J1	IC950	H2	IC1528	*C4	Q510	P1	R144	*N4	R332	*M1	R529	P3	R627	*L1
C133	N3	C316	*K1	C577	*M2	C815	F2	C986	*M4	C1134	*A1	C1292	*C4	C1541	*C5	CL815	G1	FB300	*J1	IC502	N2	IC951	*J3	IC1529	*C4	Q511	P2	R145	*N4	R333	*K1	R530	P1	R628	*L1
C134	*N3	C317	*J1	C578	*L1	C816	E2	C987	*M3	C1135	*D1	C1293	*C4	C1542	B4	CL816	G3	FB301	*J1	IC503	M2	IC1100	*B1	IC1530	A5	Q512	*M2	R146	*N5	R335	*K1	R531	P2	R629	*L1
C135	*N4	C318	K1	C579	*L2	C817	G1	C988	*M3	C1136	*B2	C1294	*C4	C1543	*D5	CL817	G3	FB1201	*C3	IC504	*N2	IC1103	*A2	IC1531	B5	Q513	*N2	R147	*N4	R336	*K1	R532	*N1	R630	*L1
C136	*P4	C320	*K1	C580	*L1	C818	E1	C989	*M4	C1137	B1	C1295	*C4	C1544	B5	CL818	G3	FB1204	*E3	IC505	*N1	IC1104	D5	IC1532	D5	Q514	*P2	R148	*N4	R339	*K1	R533	N2	R631	*L1
C137	P3	C321	*K1	C581	*L1	C819	*G1	C990	*M4	C1141	C2	C1296	*C4	C1545	*A4	CL819	G3	FB1207	*C3	IC506	*N2	IC1105	B1	IC1533	C5	Q515	N1	R149	N4	R340	*K1	R534	P1	R632	*K2
C138	*N5	C322	*J1	C582	*L1	C820	E1	C991	*L3	C1142	*C1	C1297	*C4	C1546	B4	CL820	G3			IC507	M2	IC1107	B2	IC1534	C5	Q516	*P1	R150	*N4	R343	*K1	R535	P2	R633	*K2
C139	*N3	C325	*J1	C583	*L2	C821	F2	C992	*M2	C1143	*C1	C1298	*C4	C1547	B4	CL821	G3	FL100	N5	IC509	*N1	IC1113	A2	IC1535	C5	Q517	N2	R151	*P4	R344	K1	R536	*N2	R634	*L2
C140	P5	C326	K1	C584	*L1	C822	F2	C993	*M3	C1144	*C2	C1299	D4	C1548	*J2	CL822	G3	FL500	P2	IC510	*M1	IC1114	A1	IC1536	C5	Q518	*P2	R152	*P4	R345	K1	R537	*N2	R635	*K2
C141	*N4	C327	*K1	C585	*L2	C823	F1	C994	*M4	C1145	*C1	C1300	D4	C1549	*A3	CL823	G3	FL501	P1	IC511	*L2	IC1117	*B1	IC1537	B5	Q519	*M2	R153	*P4	R346	K1	R538	P1	R636	*L2
C142	*P5	C328	*K2	C586	*L1	C824	F1	C995	*M4	C1146	*B1	C1301	D4	C1550	*B3	CL824	G3	FL502	P2	IC513	*L1	IC1118	D2	IC1538	*A5	Q520	N2	R154	*P3	R347	*J1	R539	P2	R637	*L2
C143	N3	C330	*K1	C587	N1	C825	F1	C996	*M3	C1147	*C2	C1302	D4	C1552	*J2	CL825	G3	FL700	*K5	IC514	*P2	IC1119	D1	IC1539	*A4	Q521	N1	R155	*P4	R348	K1	R540	P2	R638	*L2
C144	N3	C333	*J1	C588	N1	C826	G1	C997	M2	C1148	*B2	C1303	D4	C1555	*J2	CL826	G3	FL701	*K4	IC515	*L2	IC1120	A2	IC1540	J2	Q522	N2	R156	*P5	R349	K1	R541	P1	R639	*L2
C145	*P5	C335	J2	C589	*K2	C827	F2	C998	*M3	C1149	E4	C1304	C4	C1556	*A4	CL827	G3	FL702	*K5	IC516	*P1	IC1121	C2	IC1541	D5	Q523	*L2	R157	*P5	R350	*J1	R542	P2	R640	*L2
C146	*N5	C336	*J1	C590	*K2	C828	*G1	C999	*M3	C1150	*A4	C1305	*D3	C1559	*J2	CL828	G3	FL703	*K5	IC517	*P2	IC1122	C1	IC1542	L5	Q524	*L1	R159	*P4	R351	*J1	R543	N2	R641	*L2
C147	*N4	C337	*K2	C593	*M2	C829	E1	C1000	*M4	C1151	*A4	C1306	*D4	C1560	B3	CL829	G3	FL800	*K5	IC518	*N1	IC1123	*C2	IC1543	L5	Q525	*L2	R160	*P5	R352	*J1	R544	P1	R643	*L2
C148	*N4	C338	J2	C594	*M2	C838	*J5	C1001	*M4	C1152	*A4	C1307	*D4	C1561	*B3	CL834	G3	FL801	*K5	IC519	M1	IC1124	C2	IC1544	*M5	Q526	*L1	R162	*P3	R353	*K2	R545	P2	R644	N2
C149	*N4	C339	*M2	C595	*L2	C839	*J5	C1002	*M4	C1153	*E3	C1308	*C3	C1563	*C4	CL835	G3	FL802	*K5	IC520	*K1	IC1125	C1	IC1545	B3	Q527	*L2	R163	*P4	R354	*K2	R546	*M2	R645	*M1
C150	*N4	C340	*M1	C596	*L2	C840	*K5	C1003	M4	C1154	E3	C1309	*D3	C1565	*A5	CL836	G3	FL900	M3	IC521	*M1	IC1126	*C1	IC1546	B5	Q528	*L2	R164	*N3	R355	*K2	R547	*N2	R646	*P1
C151	*N4	C341	*M2	C597	N2	C849	*F4	C1004	*L3	C1155	B2	C1310	*D3	C1568	*A4	CL837	*G1	FL901	M3	IC522	*K2	IC1127	C2	IC1547	*C4	Q700	*D4	R165	*P4	R356	*K1	R548	M2	R647	N1
C152	*N4	C342	L2	C598	*M2	C850	*G3	C1005	*M2	C1200	*E3	C1311	D1	C1569	*M5	CL838	*G1	FL902	M4	IC523	*M2	IC1128	C1	IC1548	*C3	Q900	*M5	R166	*P4	R357	J1	R550	*M2	R648	N1
C154	*P4	C344	*M2	C599	*L1	C851	*G3	C1006	*M3	C1203	*D4	C1312	*C3	C1570	M5	CL839	*H1	FL903	M4	IC524	*M2	IC1129	*B1			Q901	*M5	R169	*P4	R358	J1	R551	N2	R653	*N2
C155	*P5	C346	L2	C600	*M2	C852	*F3	C1007	*M4	C1204	*D4	C1313	E3	C1571	L5	CL840	*H1	FL1400	*E5	IC525	*M1	IC1130	*B4	L101	*N5	Q902	*H3	R170	*N3	R359	J1	R552	*P2	R700	*L5
C156	*N3	C348	M1	C601	M2	C853	E4	C1008	*M4	C1205	*E4	C1314	D2	C1572	*L5	CL841	*G1	FL1401	*E5	IC526	*N1	IC1131	*B3	L102	*N5	Q903	*H3	R171	*P4	R360	J1	R553	N1	R701	J2
C158	*N3	C350	*L2	C602	*M2	C854	*F4	C1009	*M3	C1206	*E3	C1315	*D2	C1573	B3	CL842	*G1	FL1402	*E5	IC700	G3	IC1132	*B3	L103	*P5	Q904	*J3	R172	*P4	R361	*J2	R554	*P1	R703	*G2
C160	N3	C352	K1	C603	N1	C855	E4	C1010	*M3	C1207	*C3	C1316	*E2	C1575	C5	CL843	*G1	FL1403	*E5	IC701	G2	IC1134	*B3	L104	*N2	Q905	*J3	R173	*N3	R362	*K2	R555	N2	R706	*G1
C161	N3	C356	K1	C604	*N1	C856	*F4	C1011	*M4	C1208	*D4	C1319	*P4	C1577	*C5	CL844	*G1	FL1404	*E5	IC702	L5	IC1135	B2	L105	*N2	Q906	*M3	R174	*P4	R363	*J2	R556	*P2	R708	*F1
C162	*P5	C358	*K1	C606	N2	C857	F3	C1012	*M4	C1209	*E3	C1320	*P4	C1578	B5	CL845	*G1	FL1405	*E5	IC703	L5	IC1136	B2	L106	*N2	Q907	*M3	R175	*N4	R364	*J2	R557	N2	R711	K4
C163	*P4	C359	*K1	C608	*P1	C858	F3	C1014	*L4	C1210	*E4	C1321	*P4	C1579	*D4	CL846	*G1	FL1406	H5	IC704	L5	IC1200	*E3	L107	*N2	Q908	*M4	R176	*N4	R365	*J1	R558	N1	R712	*G1
C166	*P3	C360	*K1	C609	M2	C859	E3	C1015	*M3	C1211	*D3	C1322	*E4	C1590	*B5	CL847	*H3	FL1407	H5	IC705	K5	IC1201	*D4	L500	*N2	Q909	*M5	R177	*N3	R366	*J1	R559	N2	R713	F1
C167	*P3	C361	*K1	C610	*N1	C860	E3	C1016	*M3	C1213	*C3	C1323	*E4	C1591	*B5	CL848	*H3	FL1408	H5	IC707	*F2	IC1202	*E4	L700	*F2	Q1100	*A2	R178	*P3	R368	M1	R560	*P2	R722	*G4
C168	*P4	C362	*J2	C611	*N1	C901	H3	C1017	*M4	C1214	*E4	C1324	*F4			CL849	*H3	FL1409	H5	IC708	K5	IC1204	*D4	L900	*J2	Q1101	*A2	R179	*N3	R377	M1	R561	*P1	R727	*D4
C170	*N4	C364	*J1	C612	*M2	C903	H3	C1018	*M4	C1215	*C3	C1325	*F4	CL300	M1	CL850	*H3	FL1410	H5	IC709	K5	IC1212	E4	L903	*L3	Q1102	*A1	R180	*N3	R378	M1	R562	*P1	R729	*F3
C171	P3	C365	K2	C613	*M2	C904	*H3	C1019	*L5	C1216	*D3	C1400	*F5	CL301	L1	CL851	*H3	FL1411	G5	IC710	K5	IC1214	*D3	L904	K2	Q1103	*A1	R181	*N3	R399	L2	R564	*M2	R733	*F4
C172	*P4	C366	K2	C614	*M2	C905	H3	C1028	*L5	C1217	*D3	C1401	*F5	CL302	L1	CL852	*H3	FL1412	H5	IC711	K5	IC1216	E4	L905	*L5	Q1104	*A2	R182	*P5	R407	K1	R565	*N2	R734	*F4
C175	*N3	C367	M1	C700	*L4	C907	*J4	C1037	*M5	C1218	*E3	C1402	*E5	CL303	L1	CL853	*H3	FL1413	G5	IC712	*F1	IC1220	C3	L906	*M5	Q1105	*A2	R183	*P3	R409	K1	R566	*N1	R735	*G4
C176	*P4	C503	*M2	C701	*L5	C908	*K3	C1038	*M5	C1220	*C3	C1403	*E5	CL705	G1	CL854	*H3	FL1414	*G5	IC713	*E2	IC1221	C3	L907	M2	Q1106	B2	R184	*P4	R410	K1	R567	*N1	R736	*G2
C177	*P3	C504	*M1	C702	*L5	C911	*K3	C1039	*M5	C1221	E3	C1404	*E5	CL706	G1	CL855	*G1	FL1415	H5	IC714	*F3	IC1226	D3	L908	M4	Q1107	*A4	R194	*N3	R411	K1	R568	*M2	R740	L5
C178	*N3	C506	*P2	C703	*K4	C912	*J3	C1040	*M5	C1222	*D3	C1405	*E5	CL707	H2	CL856	*G1			IC715	E2	IC1230	*C4	L909	M3	Q1200	*E3	R195	*N3	R412	*K1	R569	*M1	R741	*F1
C179	*N3	C507	*N2	C704	*P2	C915	*J4	C1041	*M3	C1223	*D4	C1406	*F5	CL708	H2	CL857	*H2	IC100	*P5	IC716	*E1	IC1231	*D2	L910	M4	Q1201	*E3	R196	*P4	R414	*K1	R570	*M1	R742	*E3
C180	*P3	C509	*N2	C714	*K5	C916	*K3	C1042	*M3	C1224	*D3	C1407	*F5	CL709	H2	CL858	*H2	IC103	N5	IC717	*F1	IC1232	*C3	L911	M3	Q1204	*E2	R197	*P4	R415	*K1	R571	*M1	R743	*E3
C181	*P4	C510	*N2	C715	*K4	C917	*K3	C1043	*M4	C1225	*D4	C1408	*H5	CL710	H1	CL859	*H3	IC104	N4	IC801	J5	IC1234	*D3	L912	M5	Q1205	*B2	R198	*N3	R416	*K1	R572	*M1	R744	F3
C182	P4	C511	*P2	C716	*K5	C918	*J3	C1045	*M3	C1227	*D4	C1410	*G5	CL711	H1	CL860	*H2	IC107	P5	IC802	J5	IC1235	*B3	L913	*L5	Q1206	*C2	R199	*N3	R420	*K1	R573	*M1	R745	F3
C183	*P5	C512	P1	C717	*K5	C919	*J4	C1046	*M3	C1228	*E3	C1411	*G5	CL712	H1	CL900	J3	IC109	*N4	IC803	J5	IC1236	C2	L914	L3	Q1207	*D3	R201	*N3	R421	*K1	R574	*N2	R746	F3
C185	*P4	C513	P2	C718	*G1	C921	*K3	C1047	*M3	C1229	*C3	C1412	*G5	CL713	H1	CL901	J4	IC110	N3	IC804	J5	IC1237	*C2	L1100	A2	Q1208	*D3	R202	*P4	R422	*K2	R575	*N2	R747	F3
C186	*P3	C514	*P3	C719	*G2	C923	*K3	C1048	*M3	C1230	*D3	C1413	*H5	CL715	H2	CL902	K4	IC112	P4	IC805	H5	IC1238	*D3	L1101	A2	Q1209	*D3	R203	*P4	R423	*J2	R576	*N1	R748	F3
C187	*N3	C515	*P1	C720	*H2	C924	*J4	C1049	*M4	C1231	*D3	C1415	*G5	CL716	H2	CL906	M5	IC113	*N3	IC806	*F1	IC1239	*C3	L1102	*A2	Q1210	*D3	R204	*P4	R427	*J2	R577	*N1	R749	*E1
C189	*P4	C516	*P2	C721	*H1	C925	*J4	C1050	*M4	C1232	*D4	C1416	*G5	CL717	G1	CL1205	D4	IC114	*P5	IC807	*F1	IC1240	*D3	L1103	B1	Q1211	*E3	R207	*P4	R428	L2	R578	*N1	R750	*G4
C191	*N3	C517	M2	C722	*H1	C926	*J4	C1052	*M5	C1233	*C4	C1417	*G5	CL718	H2	CL1206	D4	IC115	*P4	IC808	F1	IC1241	*D4	L1104	*E4	Q1212	*B2	R214	*N3	R429	L2	R579	*N1	R751	*G4
C192	*P4	C518	*P3	C723	*G2	C927	*J4	C1053	*M5	C1234	*E4	C1418	*H5	CL719	G3	CL1207	E4	IC116	*N4	IC809	J5	IC1243	*D4	L1200	*B3	Q1500	*J2	R215	*P4	R430	L2	R580	*P2	R752	*G4
C193	*N3	C519	*P3	C724	*G2	C928	*J4	C1054	*M5	C1235	E3	C1420	*G5	CL720	G3	CL1500	J2	IC117	P4	IC810	J5	IC1244	E3	L1201	*D4	Q1501	*D4	R216	*P4	R431	*K2	R581	*P1	R753	*E2
C195	*N3	C520	P1	C725	*G2	C929	H4	C1055	*M5	C1236	*E2	C1421	*G5	CL721	G3			IC118	*N3	IC811	K5	IC1245	*B3	L1202	*D4	Q1590	*B5	R217	*P4	R432	*K1	R582	*P2	R754	*E2
C196	*N3	C521	P2	C726	*H2	C930	*J4	C1056	*M5	C1237	C3	C1422	*G5	CL722	G3	CN1	B3	IC119	P3	IC813	E4	IC1247	*D2	L1203	*D4	Q1591	*C5	R218	*P4	R433	*K1	R583	*P2	R755	E4
C197	*N3	C522	*N1	C727	*H2	C931	*H4	C1057	*M5	C1238	C2	C1423	*P5	CL723	G3	CN25	M6	IC120	N3	IC901	H3	IC1248	*D1	L1204	*D4			R219	*P4	R435	*M1	R584	*P1	R800	*P2
C198	N3	C523	*N2	C728	*G2	C932	J2	C1060	*L2	C1239	E4	C1424	*H5	CL724	G3	CN26	H6	IC121	P4	IC902	J3	IC1249	D1	L1205	*C4	R100	N5	R220	*P4	R439	*M2	R585	*P2	R801	*E1
C199	N3	C524	P2	C729	*H2	C935	*J2	C1061	L2	C1241	*E3	C1426	*G5	CL725	G3	CN27	C6	IC122	P5	IC903	*H4	IC1250	*D2	L1206	D4	R101	N5	R221	N3	R440	M2	R586	*M1	R802	E1
C201	*P4	C525	P1	C730	*G1	C937	*H4	C1062	*H2	C1242	D2	C1427	*G5	CL726	F3	CN700	D1	IC126	P5	IC906	*K3	IC1251	C2			R102	P5	R222	*P4	R441	*M1	R587	*N1	R803	G1
C202	*P4	C526	P2	C731	*G2	C938	*L3	C1063	K3	C1245	*D3	C1428	*G5	CL727	F3			IC129	P4	IC910	*J3	IC1252	*D2	OSC1	*C3	R104	P5	R223	*P4	R443	*K2	R588	N2	R804	*G3
C203	*P4	C528	*M2	C732	*H1	C940	*L3	C1064	K3	C1246	C2	C1429	*H5	CL728	F3	D100	*N4	IC130	*N4	IC912	*H4	IC1253	*D2			R106	P5	R224	*P4	R444	K2	R589	N1	R805	*F4
C207	*N2	C537	*M1	C733	*G1	C942	*H4	C1065	K2	C1249	*D3	C1431	*G5	CL729	F3	D101	*P4	IC132	P4	IC913	*L3	IC1256	*F4	Q100	P5	R107	*N5	R225	*P4	R445	*J1	R590	N2	R806	E3
C208	*P3	C538	*P2	C734	*G2	C944	*H4	C1066	*J3	C1250	C2	C1432	*G5	CL730	F3	D300	*K1	IC134	P3	IC914	*L3	IC1406	F5	Q101	P5	R108	*N5	R226	*P4	R446	*K1	R591	N2	R807	*H5
C209	P3	C539	*P1	C735	*G2	C945	*H4	C1067	*K3	C1251	C2	C1433	*G5	CL731	F3	D301	*K1	IC139	*N5	IC915	*L3	IC1407	F5	Q102	*P5	R110	N5	R227	*N5	R447	M1	R592	N1	R901	H3
C210	*P3	C540	*P2	C736	*E2	C947	J4	C1068	*J3	C1252	B2	C1434	*F5	CL732	F3	D303	*K2	IC140	*P3	IC916	*L4	IC1408	F5	Q103	*N5	R111	*P5	R228	*P5	R448	M2	R593	N1	R905	H3
C212	*P3	C541	*P2	C739	E2	C948	*J4	C1069	*L4	C1253	B2	C1435	*P5	CL733	F3	D304	*K2	IC141	*P3	IC917	*H4	IC1409	*H5	Q104	*P5	R112	N4	R229	M3	R449	J1	R596	M1	R906	H3
C213	*P3	C542	*P1	C751	*F1	C950	*J4	C1070	L3	C1254	B3	C1436	*H5	CL734	F3	D500	*P2	IC142	*P4	IC918	*H4	IC1413	F5	Q105	*P4	R113	N4	R230	P5	R450	*J1	R597	M1	R907	H3
C214	*P3	C543	*P2	C752	*F1	C952	*L4	C1071	*L3	C1255	B3	C1437	*G5	CL735	F3	D501	*P1	IC143	*P3	IC919	*J4	IC1417	F5	Q106	*P5	R115	N4	R231	P5	R453	K1	R598	*N2	R908	*J4
C215	*P3	C544	*M1	C753	*E2	C953	*J4	C1100	*C1	C1256	C3	C1438	*G5	CL736	F3	D502	*P2	IC144	*P3	IC920	L3	IC1418	F5	Q107	*N3	R116	*N4	R232	N3	R454	K1	R599	*N1	R909	*J4
C216	*P4	C545	*M1	C754	*F3	C955	*L4	C1102	B1	C1258	*C2	C1439	*G5	CL737	F3	D503	N2	IC145	*N3	IC922	M2	IC1419	F5	Q108	*N3	R117	N3	R233	N3	R500	*N2	R600	*N2	R910	*J4
C217	N4	C546	*P2	C755	F3	C956	*L4	C1103	C1	C1259	D3	C1440	*G5	CL738	F3	D900	*H4	IC146	P4	IC923	M3	IC1420	E5	Q109	*P4	R118	*N4	R234	J1	R501	*N2	R601	*K1	R911	*J4

4-68 (a)

VPR-64
SUFFIX: -15

R912	*J4	R1031	*M3	R1144	C2	R1291	*E2	R1420	*G5	R1590	*B5
R913	*J4	R1032	*M3	R1145	C2	R1292	*E2	R1421	*F5	R1591	*B5
R914	*J4	R1033	*M4	R1146	B2	R1293	C3	R1422	*F5	R1592	*B5
R915	*H4	R1034	*M4	R1148	*D5	R1294	C3	R1423	*H5	R1593	*C5
R916	*J3	R1035	*M5	R1149	E3	R1295	*C2	R1424	*H5	R1594	*D4
R917	*K4	R1036	*M4	R1150	*E3	R1296	*C2	R1427	*G5		
R918	*K4	R1037	*L4	R1151	*A2	R1297	*C2	R1428	*G5	RB700	*L5
R919	*K4	R1038	*L4	R1152	E3	R1298	C3	R1429	*G5	RB701	*L5
R921	*K4	R1039	*L5	R1153	*C2	R1299	*B2	R1430	*G5	RB702	*K4
R924	H4	R1040	*L5	R1154	B3	R1300	*B2	R1431	*G5	RB703	*L5
R925	H3	R1041	*L5	R1155	B3	R1301	*B2	R1432	*G5	RB704	*L5
R926	H3	R1042	*M3	R1156	B3	R1302	*C2	R1433	*H5	RB705	*L4
R927	H3	R1043	*M3	R1157	C3	R1303	*C2	R1435	*G5	RB719	*K5
R932	*J4	R1044	*M4	R1158	B2	R1304	*C2	R1436	*G5	RB720	*E2
R933	*J4	R1045	*M5	R1159	B2	R1305	*C3	R1437	*G5	RB800	*J5
R934	*J4	R1046	*M5	R1160	B2	R1310	D4	R1438	*G5	RB801	*J5
R935	*K4	R1047	*M5	R1161	*A4	R1311	C4	R1439	*G5	RB802	*J5
R938	*K4	R1048	*M5	R1200	E3	R1312	D4	R1440	*G5	RB803	*J5
R939	*K4	R1049	*M3	R1201	E3	R1313	C4	R1441	*G5	RB804	*H5
R953	*J3	R1050	*M3	R1202	E3	R1314	*D3	R1442	*G5	RB805	*J5
R954	*J3	R1051	*M4	R1203	E3	R1315	*D3	R1443	*G5	RB806	*J5
R955	*H4	R1052	*M3	R1204	*E3	R1316	*D3	R1444	*F5	RB807	*J5
R956	*J3	R1053	*M3	R1209	D4	R1317	*C2	R1445	*F5	RB808	*J5
R957	*K4	R1054	*M4	R1210	D3	R1318	C2	R1446	*G5	RB809	*H5
R960	*J4	R1055	*M5	R1211	D3	R1319	*C2	R1447	*G5	RB1100	*D5
R961	*J4	R1056	*M5	R1212	C4	R1320	*C2	R1448	*G5	RB1101	*D5
R962	*L4	R1057	*M5	R1213	C4	R1321	*C2	R1449	*G5	RB1500	*C5
R963	*L3	R1058	*M5	R1214	C4	R1322	*C2	R1450	H5	RB1501	*D4
R964	*L4	R1061	M3	R1215	C4	R1323	*C2	R1451	*F5	RB1502	C5
R965	*J4	R1062	M3	R1216	C4	R1324	*C2	R1452	*E5	RB1503	D5
R966	*L4	R1063	M4	R1217	C4	R1325	*D4	R1453	*E5	RB1504	*B4
R967	*L3	R1064	M5	R1218	C4	R1326	*D4	R1454	*E5	RB1505	*B4
R968	*L4	R1065	M5	R1219	C4	R1327	*C3	R1455	*E5	RB1506	*A4
R969	*L4	R1066	M5	R1220	*C4	R1328	*C3	R1456	*E5	RB1507	*A4
R970	*L3	R1069	*K3	R1221	*C4	R1329	*C3	R1457	*G5	RB1508	*B5
R971	*L4	R1070	*J3	R1222	*C4	R1330	*D3	R1500	D5	RB1509	*B5
R972	*J4	R1072	G1	R1223	C3	R1331	*D3	R1501	D5		
R975	*L4	R1073	F1	R1225	C3	R1332	*D2	R1502	*D4	RV1	N3
R976	*L4	R1074	K4	R1226	D3	R1333	*D2	R1503	*C5	RV2	P3
R977	*L4	R1075	K4	R1227	*D4	R1334	*C2	R1504	*C5		
R979	*M5	R1076	L4	R1231	*D3	R1335	*D2	R1505	*C5	THP100	*E3
R980	*M5	R1077	*M5	R1232	*D3	R1336	C3	R1506	*C5		
R981	*M5	R1078	*M5	R1236	*E3	R1337	*D3	R1507	*C5	TP103	P3
R982	*M3	R1079	*K3	R1237	*E4	R1338	*D3	R1508	*C5	TP105	J1
R983	*M4	R1080	*J3	R1238	*D4	R1339	*D3	R1509	*C5	TP300	J1
R984	*M4	R1081	*J3	R1239	*C3	R1340	D1	R1510	*C5	TP503	N2
R985	*M5	R1082	*H4	R1240	*D3	R1341	*C4	R1511	*C5	TP504	N1
R986	M3	R1083	*M3	R1242	*D4	R1342	*C3	R1512	*C5	TP505	N1
R987	M3	R1084	*M3	R1243	*D3	R1343	*C4	R1513	*D5	TP506	N1
R988	M4	R1085	*M3	R1244	*C3	R1344	*C3	R1514	*D5	TP800	G3
R989	M5	R1086	*M3	R1245	*E4	R1345	*D2	R1515	*D5	TP900	H1
R990	M3	R1087	*M4	R1246	*C3	R1346	*D2	R1516	*D5	TP901	H1
R991	M3	R1088	*M4	R1247	*C3	R1347	*D4	R1517	*D5	TP902	H1
R992	M3	R1089	*M5	R1248	*D3	R1348	*D4	R1518	*D5	TP903	G1
R993	M4	R1090	*M5	R1249	*D3	R1349	*C4	R1519	*A5	TP904	G1
R994	M4	R1091	*L4	R1250	*D3	R1350	*C4	R1520	*A5	TP905	G1
R995	M4	R1101	*A2	R1252	*C3	R1351	*D4	R1521	B4	TP906	F1
R996	*M3	R1102	*A2	R1253	*D3	R1352	*C4	R1522	B4	TP907	F1
R997	M3	R1103	*A2	R1254	*E3	R1353	*C4	R1523	B4	TP908	M3
R998	M4	R1104	*A2	R1255	*D3	R1354	D5	R1524	B4	TP909	M3
R999	*M5	R1105	*A2	R1256	*D3	R1355	D5	R1525	*J2	TP910	M4
R1000	M3	R1106	*A2	R1257	*D3	R1356	D3	R1526	*J2	TP911	M5
R1001	M3	R1107	A2	R1258	*D3	R1381	E4	R1527	*J2	TP1100	A2
R1002	M4	R1108	*A2	R1259	*C3	R1382	E3	R1530	*C5	TP1200	E1
R1003	M5	R1109	A1	R1260	*D3	R1383	D3	R1531	*C5	TP1201	E1
R1004	M3	R1110	*A1	R1261	*D4	R1384	D3	R1532	*C5		
R1005	M3	R1111	*A1	R1262	*D3	R1385	*C3	R1533	*C5	X300	J1
R1006	M4	R1112	*A1	R1263	*D3	R1386	E3	R1534	*C5	X301	J1
R1007	M4	R1113	*A1	R1264	*C3	R1387	*B2	R1535	*C5	X302	*J2
R1008	*M3	R1114	*A1	R1266	*E3	R1388	*F4	R1536	*D5	X900	*J3
R1009	*M3	R1115	*A1	R1267	*D4	R1389	*F4	R1537	*D5	X901	*K3
R1010	*M3	R1116	*A1	R1269	*D4	R1390	*E4	R1538	A4	X1203	*C3
R1011	*M3	R1117	*B1	R1270	*E3	R1391	*D4	R1539	A5	X1204	D3
R1012	*M4	R1118	*B1	R1271	*E4	R1392	*D4	R1540	A4	X1205	D3
R1013	*M4	R1119	*B1	R1272	*E3	R1393	*F4	R1541	A5		
R1014	*M4	R1120	A2	R1274	C2	R1401	*G5	R1542	*B5	*:B SIDE	
R1015	*M5	R1121	*A2	R1275	D3	R1402	*G5	R1543	*B5		
R1016	*M2	R1122	*B1	R1276	D3	R1403	*G5	R1544	*D5		
R1017	*M3	R1124	*A2	R1277	D3	R1404	*F5	R1545	*D5		
R1018	*M4	R1126	*A2	R1278	D2	R1405	*F5	R1546	*D5		
R1019	*M4	R1127	*B2	R1279	D2	R1406	*H5	R1547	*D5		
R1020	*M2	R1129	*B2	R1280	C2	R1407	*H5	R1548	L5		
R1021	*M3	R1130	*B1	R1281	C2	R1409	*G5	R1549	M5		
R1022	*M4	R1132	*B2	R1282	*D2	R1410	*G5	R1550	M5		
R1023	*M4	R1135	*A2	R1283	*D2	R1411	*G5	R1551	L5		
R1024	*M2	R1136	*A2	R1284	B2	R1412	*F5	R1552	M5		
R1025	*M3	R1138	*A2	R1285	C2	R1413	*F5	R1553	L5		
R1026	*M4	R1139	*C2	R1286	C2	R1414	*F5	R1554	*D4		
R1027	*M4	R1140	*C2	R1287	C2	R1415	*F5	R1555	*C5		
R1028	*L3	R1141	*C2	R1288	*D2	R1416	*H5	R1556	*D4		
R1029	*M3	R1142	*C2	R1289	C3	R1418	*G5	R1557	*A4		
R1030	*M3	R1143	C2	R1290	C3	R1419	*G5	R1558	*B5		

4-69 (a)

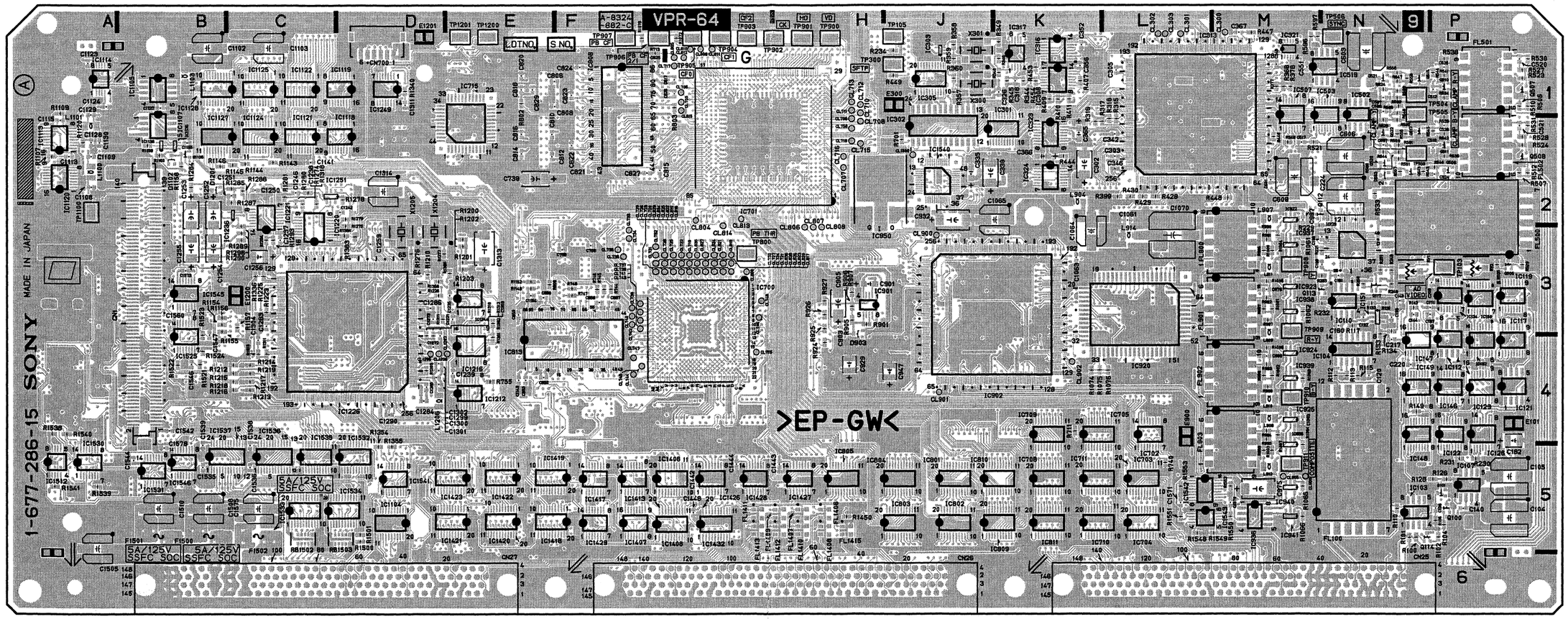

Components locations list; previous page

VPR-64 -A SIDE-
SUFFIX: -15

MB-884 (1-677-263-15)

CN1	C4
CN3	J4
CN4	C5
CN5	F5
CN6	J5
CN7	C5
CN8	F5
CN9	J5
CN10	C6
CN13	C6
CN14	F6
CN15	J6
CN16	C7
CN17	F7
CN18	J7
CN19	C7
CN20	F7
CN21	J7
CN22	C8
CN23	F8
CN24	J8
CN25	C9
CN26	F9
CN27	J9
CN41	C9
CN42	G9
CN51	K1
CN61	C3
CN62	E3
CN65	H2
CN67	E9
CN68	H4
CN69	J2
CN71	L7
CN72	L7
CN73	H1
CN74	A3
CN81	B5
CN82	C4
CN83	B4
CN84	H4
CN85	C5
CN86	C5
CN87	C4
CN100	L2
Q1	H2
Q2	H2
R1	H2
R2	H2
SL1	*A4
SL2	*H4
SL3	*A4
SL4	*A4
SL5	*B4
SL6	*B4
SL7	*B4
SL8	*B4
SL9	*B4
SL10	*B4
SL11	*B4
SL12	*B4
SL13	*B4
SL14	*H4
SL15	*H4
SL16	*H4
SL17	*H4
SL18	*H4
SL19	*H4
SL20	*H4
SL21	*H4
SL22	*H4
SL23	*H4
SL24	*H4
THP1	K3
THP2	K2
THP3	K2

*:B SIDE

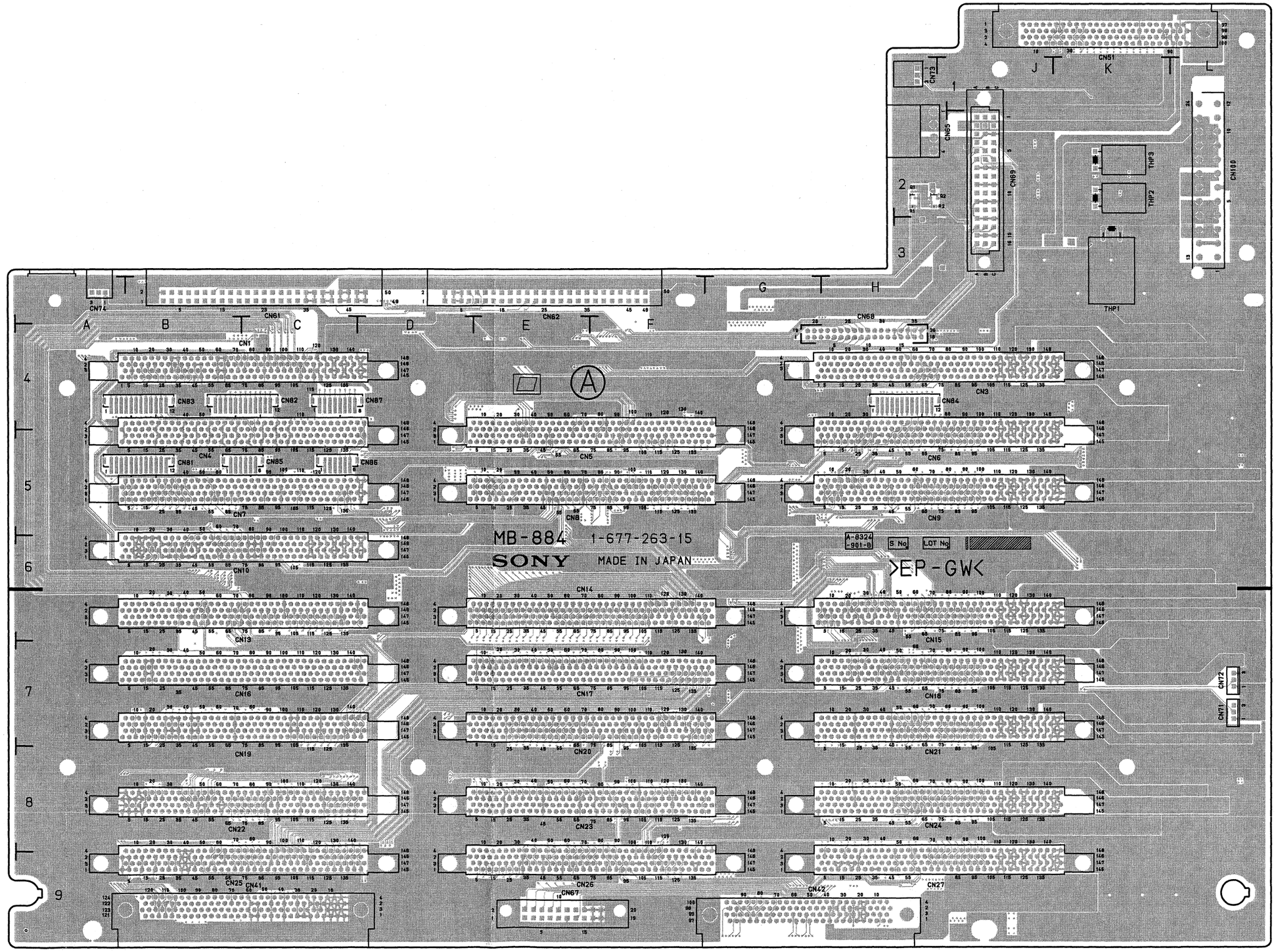

MB-884 -A SIDE-
SUFFIX: -15

MB-884 -B SIDE-
SUFFIX: -15

SDI-52 SUFFIX: -17

SDI-52 (1-677-265-17)

C100	*B2	C517	*F2	C713	B4	FB503	F1	R110	*C1
C101	B2	C518	F2	C714	*B3	FB504	*F1	R111	C1
C102	*D1	C519	*F2	C801	*J1	FB505	*F1	R112	C1
C103	B2	C520	*F2	C802	C4	FB600	H2	R113	C1
C104	*D1	C521	*F2	C803	C4	FB601	*H1	R114	C1
C105	D1	C522	*F1	C804	C4	FB602	*J2	R115	C2
C106	C1	C523	*F1	C805	D4	FB603	H1	R116	*C1
C107	C1	C524	*F1	C806	*D4	FB604	*H1	R117	*C1
C108	*D1	C525	*G1	C807	*C4	FB605	*H1	R118	C2
C109	*D1	C526	F2	C808	*C4			R119	C2
C110	*C1	C527	F2	C809	*C4	IC100	B2	R120	*C1
C111	*C1	C528	F2	C810	D4	IC101	*D1	R121	*C1
C112	*C1	C529	F1	C811	*D4	IC102	*D1	R122	*C1
C113	D2	C530	F2	C812	*D3	IC103	C1	R123	C1
C114	*C1	C531	F2	C813	*E3	IC104	C2	R124	*C1
C115	C1	C532	F1	C814	*E4	IC105	C2	R125	*C2
C116	C1	C533	F1	C815	*D4	IC106	C3	R126	*C1
C117	C2	C534	*E1	C816	*E4	IC107	B3	R127	*B1
C118	C1	C535	F1	C817	*D4	IC108	*B3	R128	*B2
C119	C1	C536	F2	C818	*D4	IC109	B3	R129	*C2
C120	C1	C537	*E2	C819	*D3	IC300	A3	R130	*B2
C121	*C1	C538	*F2	C820	*E3	IC301	D2	R131	C2
C122	*C1	C539	*F1	C821	*E4	IC302	A2	R132	*B1
C123	*C1	C540	F1	C822	*D3	IC303	A2	R133	*B2
C124	*C1	C541	*F2	C823	*D4	IC304	*A2	R134	*B2
C125	*C1	C542	F1	C824	*K1	IC305	*A2	R135	C2
C126	*C1	C543	*F1			IC306	B1	R136	C2
C127	*C1	C544	F1	CL100	C1	IC307	A1	R137	*B2
C128	*C1	C545	*F1	CL101	C1	IC502	E1	R138	*B1
C129	*C1	C546	*F2	CL102	D2	IC503	E2	R139	*C1
C130	*C2	C547	F1	CL103	C2	IC504	*G2	R140	C2
C131	*C2	C548	E1	CL104	C2	IC505	G2	R141	*B2
C132	*C2	C549	*F1	CL300	A3	IC506	*G2	R142	*B1
C133	*C2	C550	*F2	CL500	D2	IC507	F2	R143	*B1
C134	*C1	C551	F1	CL501	D2	IC600	G1	R144	B1
C135	*C1	C552	E1	CL502	D1	IC601	G2	R145	*D3
C136	C1	C600	*E2	CL503	D2	IC602	*H2	R146	*B3
C137	C1	C601	*E2	CL504	D2	IC603	D4	R147	*B3
C138	C1	C602	G1	CL600	A2	IC604	*H2	R148	*B3
C139	C2	C603	G2	CL601	A3	IC605	H2	R149	*B3
C140	C2	C604	*H2	CL602	D2	IC606	J2	R150	*B3
C141	*B1	C605	*H2	CL603	D2	IC700	B4	R151	A2
C142	*B2	C606	*H2	CL604	D1	IC701	B4	R152	*A2
C143	*B2	C607	J2	CL605	D1	IC704	B4	R153	*A2
C144	*B2	C608	H2	CL700	B3	IC707	*B3	R300	A3
C145	*B1	C609	*H2	CL701	B4	IC801	K1	R301	A3
C146	*B1	C610	H2	CL702	A3	IC802	C4	R302	A3
C147	*B1	C611	H2	CL703	C4	IC804	*D4	R303	A3
C148	B1	C612	*H2	CL704	E2	IC805	J1	R304	*A3
C149	B1	C613	*H2	CL800	C4	IC806	J2	R305	*A3
C150	*C3	C614	*H1	CL801	C4	IC807	*J1	R306	A3
C151	*C3	C615	*H2	CL802	D4			R307	A3
C152	B3	C616	H2	CL804	E3	L100	D1	R308	A3
C153	*C3	C617	*H2	CL805	D3	L300	A1	R309	*A3
C154	*C3	C618	*H2	CL806	D4			R310	A3
C155	B3	C619	*H2	CL807	E4	Q1	*A3	R311	A3
C156	B3	C620	*H1	CL808	C4	Q100	B2	R312	A3
C157	*B3	C621	*H1	CL809	C4	Q101	*B2	R313	*C3
C300	A3	C622	*H1			Q102	*B1	R314	*C3
C301	*D2	C623	*J1	CN1	*A3	Q103	*B2	R315	*A3
C302	*D2	C624	H2	CN100	D1	Q104	*B1	R316	*A3
C303	A2	C625	H2	CN101	B1	Q500	F2	R317	*A3
C304	*C3	C626	H2	CN500	G1	Q501	*E1	R318	*A3
C305	*C3	C627	H1	CN501	E1	Q502	*E1	R319	*A3
C306	*A2	C628	H2	CN600	G1	Q503	F1	R320	*A3
C307	A2	C629	H2	CN800	J1	Q504	*F1	R321	*A3
C308	*A2	C630	H1			Q505	F1	R322	*A2
C309	A2	C631	H1	D300	A2	Q506	*F1	R323	A2
C310	B1	C632	*G1	D301	A2	Q507	*F2	R324	*A2
C311	*A2	C633	H1	D700	J1	Q508	F1	R325	*A3
C312	A1	C634	H2	D701	J1	Q509	*F2	R326	*A3
C313	A1	C635	*G2	D800	*D4	Q510	F1	R327	A1
C314	*A1	C636	*H1			Q511	*F2	R328	A1
C315	*A1	C637	H1	E700	B1	Q512	*F2	R329	A2
C316	*A1	C638	H1	E701	A4	Q600	H2	R500	E2
C317	*A1	C639	*H1	E702	E2	Q601	*G1	R501	E3
C318	A1	C640	H1	E703	J2	Q602	*G1	R502	E3
C502	*D2	C641	*H1	E704	*B1	Q603	H1	R503	E3
C503	*D2	C642	G1	E705	*A4	Q604	H1	R507	E2
C504	E1	C643	*H1	E706	*E2	Q605	H1	R508	F2
C505	E2	C644	G1	E707	*J2	Q606	H1	R509	F2
C506	*G2	C700	B4					R510	F2
C507	*G2	C701	*C3	FB100	B2	R100	B2	R511	F2
C508	*G2	C702	*C3	FB101	*C1	R101	B2	R512	F2
C509	G2	C703	*C3	FB102	*C1	R102	B2	R513	F2
C510	F2	C704	*C3	FB103	*C1	R103	B2	R514	F2
C511	*G2	C705	*D2	FB104	B1	R104	B2	R515	G2
C512	F2	C706	*E2	FB105	*B2	R105	D1	R516	G2
C513	F2	C707	*D2	FB106	*B1	R106	B2	R517	*F1
C514	*G2	C708	*D2	FB500	G2	R107	B2	R518	F2
C515	*F2	C709	B4	FB501	*F1	R108	*C1	R519	*E1
C516	*F1	C710	*B4	FB502	*G2	R109	D2	R520	*E1

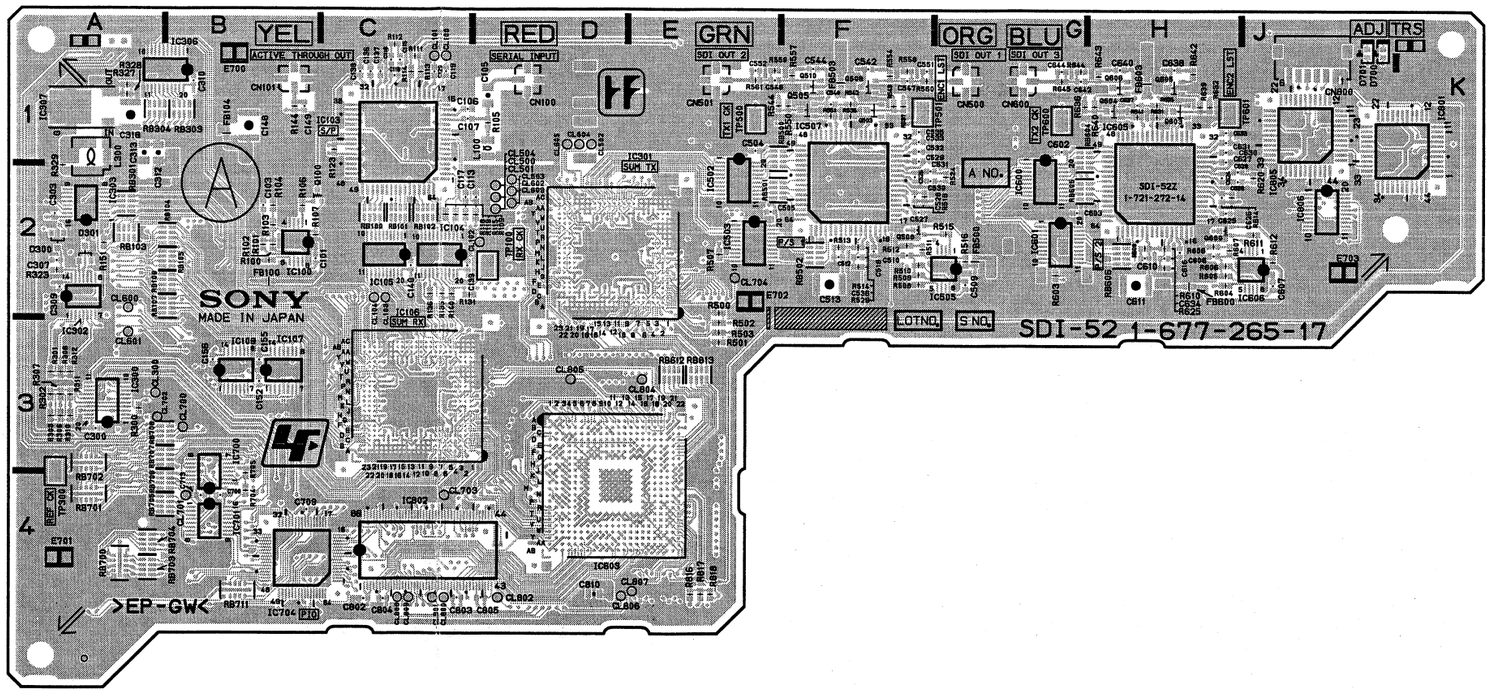

SDI-52 -A SIDE-
SUFFIX: -17

4-58 (b)

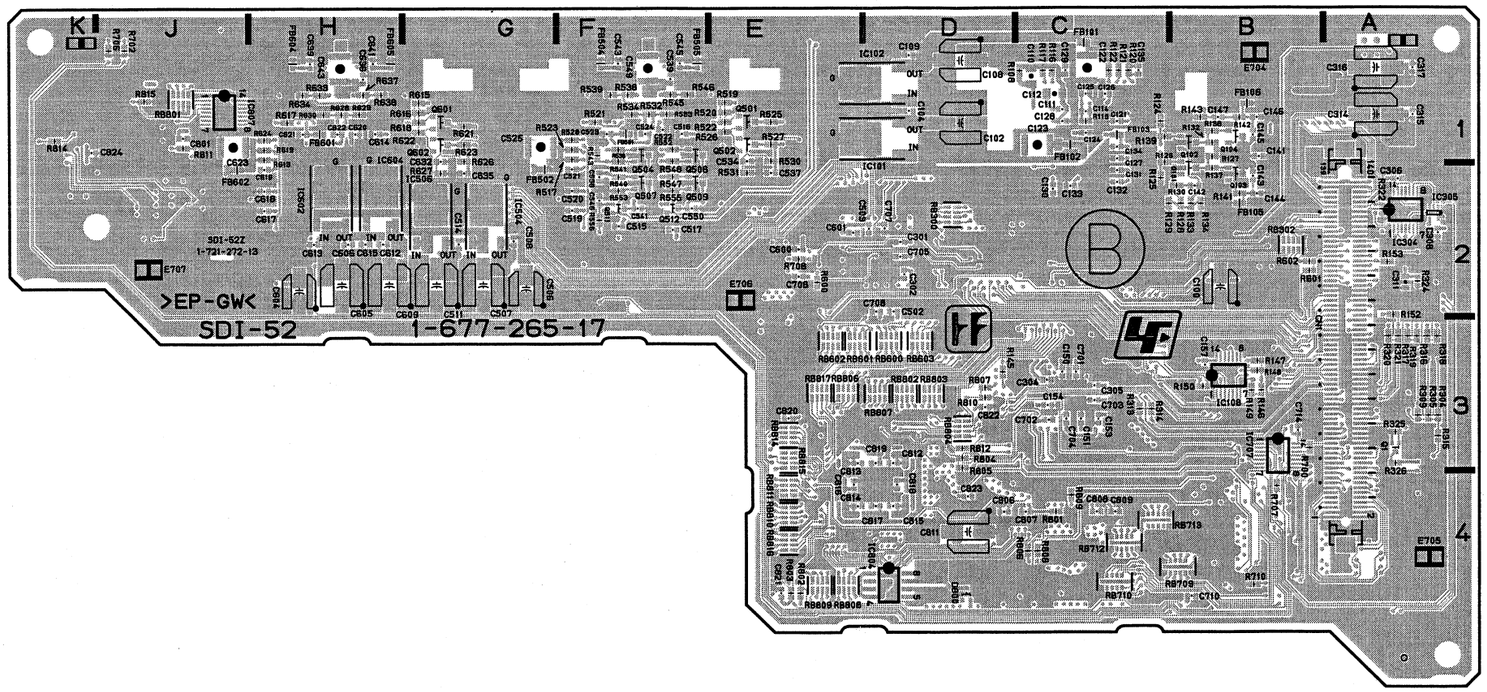

SDI-52 -B SIDE-
SUFFIX: -17

R521	*F1	R707	*B4
R522	*E1	R708	*E2
R523	*F1	R710	*B4
R524	G2	R801	*C4
R525	*E1	R802	*E4
R526	*E1	R803	*E4
R527	*E1	R804	*D3
R528	*F1	R805	*D3
R529	F2	R806	*C4
R530	*E1	R807	*D3
R531	*B2	R808	*C4
R532	*F1	R809	*C4
R533	*F1	R810	*D3
R534	*F1	R811	*J1
R535	F1	R812	*D3
R536	*F1	R814	*K1
R537	F1	R815	*J1
R538	*F1	R816	E4
R539	*F1	R817	E4
R540	*F2	R818	E4
R541	*F1		
R542	F1	RB100	C2
R543	*F1	RB101	C2
R544	E1	RB102	C2
R545	*F1	RB103	A2
R546	*F1	RB104	B2
R547	*F2	RB105	B2
R548	*F1	RB106	B2
R549	F1	RB107	B2
R550	F1	RB300	*D2
R551	F1	RB301	A2
R552	*F1	RB302	*B2
R553	*F2	RB303	B1
R554	F1	RB304	A1
R555	*F2	RB500	E1
R556	*F2	RB501	B2
R557	F1	RB502	F2
R558	F1	RB600	*D3
R559	E1	RB601	*E3
R560	F1	RB602	*E3
R561	E1	RB603	*D3
R600	*E2	RB604	G1
R601	*B2	RB605	G2
R602	*B2	RB606	H2
R603	G2	RB612	E3
R604	H2	RB700	A4
R605	H2	RB701	A4
R606	H2	RB702	A3
R607	H2	RB703	A4
R608	H2	RB704	A4
R609	H2	RB705	B4
R610	H2	RB706	B4
R611	J2	RB707	B3
R612	J2	RB708	B3
R613	*H1	RB709	*B4
R614	H2	RB710	*C4
R615	*G1	RB711	B4
R616	*G1	RB712	*C4
R617	*H1	RB713	*C4
R618	*G1	RB801	*J1
R619	*H1	RB802	*D3
R620	J2	RB803	*D3
R621	*G1	RB804	*D3
R622	*G1	RB806	*E3
R623	*G1	RB807	*D3
R624	*H1	RB808	*E4
R625	H2	RB809	*E4
R626	*G1	RB810	*E4
R627	*G2	RB811	*E4
R628	*H1	RB813	E3
R629	*H1	RB814	*E3
R630	*H1	RB815	*E3
R631	H1	RB816	*E4
R632	H1	RB817	*E3
R633	*H1		
R634	*H1	TP100	D2
R635	H1	TP300	A4
R636	G1	TP500	E1
R637	*H1	TP501	F1
R638	*H1	TP600	G1
R639	H1	TP601	H1
R640	H1		
R641	H1	*:B SIDE	
R642	H1		
R643	H1		
R644	G1		
R645	G1		
R700	*B3		
R702	*J1		
R704	B4		
R705	B4		
R706	*J1		

SDI-52 (1-677-265-15)

C100	C2	C518	F2	C714	*B3	FB504	*F1	R111	C1
C101	B2	C519	*F2	C801	*J1	FB505	*F1	R112	C1
C102	D1	C520	*F2	C802	C4	FB600	J2	R113	C1
C103	B2	C521	*F2	C803	C4	FB601	*H1	R114	C1
C104	*D1	C522	*F1	C804	C4	FB602	*J2	R115	C2
C105	D1	C523	*F1	C805	D4	FB603	H1	R116	*C1
C106	C1	C524	*F1	C806	*D4	FB604	*H1	R117	*C1
C107	C1	C525	*G1	C807	*C4	FB605	*H1	R118	C2
C108	D1	C526	F2	C808	*C4			R119	C2
C109	*D1	C527	F2	C809	*C4	IC100	B2	R120	*C1
C110	*C1	C528	F2	C810	D4	IC101	*D1	R121	*C1
C111	*C1	C529	F1	C811	*D4	IC102	*D1	R122	*C1
C112	*C1	C530	F2	C812	*D3	IC103	C1	R123	C1
C113	D2	C531	F2	C813	*E3	IC104	C2	R124	*C1
C114	*C1	C532	F1	C814	*E4	IC105	C2	R125	*C2
C115	C1	C533	F1	C815	*D4	IC106	C3	R126	*C1
C116	C1	C534	*E1	C816	*E4	IC107	B3	R127	*B1
C117	C2	C535	F1	C817	*D4	IC108	*B3	R128	*B2
C118	C1	C536	F2	C818	*D4	IC109	B3	R129	*C2
C119	C1	C537	*E2	C819	*D3	IC300	A3	R130	*B2
C120	C1	C538	*F2	C820	*E3	IC301	D2	R131	C2
C121	*C1	C539	*F1	C821	*E4	IC302	A2	R132	*B1
C122	*C1	C540	F1	C822	*D3	IC303	A2	R133	*B2
C123	*C1	C541	*F2	C823	*D4	IC304	*A2	R134	*B2
C124	*C1	C542	F1	C824	*K1	IC305	*A2	R135	C2
C125	*C1	C543	*F1			IC306	B1	R136	C2
C126	*C1	C544	F1	CL100	C1	IC307	*A1	R137	*B2
C127	*C1	C545	*F1	CL101	C1	IC502	E1	R138	*B1
C128	*C1	C546	*F2	CL102	D2	IC503	E2	R139	*C1
C129	*C1	C547	F1	CL103	C2	IC504	*G1	R140	C2
C130	*C2	C548	E1	CL104	C2	IC505	G2	R141	*B2
C131	*C2	C549	*F1	CL300	A3	IC506	*G2	R142	*B1
C132	*C2	C550	*F2	CL500	D2	IC507	F2	R143	*B1
C133	*C2	C551	F1	CL501	D2	IC600	G1	R144	B1
C134	*C1	C552	E1	CL502	D1	IC601	G2	R145	*D3
C135	*C1	C600	*E2	CL503	D2	IC602	*J1	R146	*B3
C136	C1	C601	*E2	CL504	D2	IC603	D4	R147	*B3
C137	C1	C602	G1	CL600	A2	IC604	*K1	R148	*B3
C138	C1	C603	G2	CL601	A3	IC605	H2	R149	*B3
C139	C2	C604	J2	CL602	D2	IC606	J2	R150	*B3
C140	C2	C605	H1	CL603	D2	IC700	B4	R151	A2
C141	*B1	C606	*H1	CL604	D1	IC701	B4	R152	*A2
C142	*B2	C607	J2	CL605	D1	IC704	B4	R153	*A2
C143	*B2	C608	H2	CL700	B3	IC707	*B3	R300	A3
C144	*B2	C609	K1	CL701	B4	IC801	K1	R301	A3
C145	*B1	C610	H2	CL702	A3	IC802	C4	R302	A3
C146	*B1	C611	H2	CL703	C4	IC804	*D4	R303	A3
C147	*B1	C612	*K1	CL704	E2	IC805	J1	R304	*A3
C148	B1	C613	*H2	CL800	C4	IC806	J2	R305	*A3
C149	B1	C614	*H1	CL801	C4	IC807	*J1	R306	A3
C150	*C3	C615	*H2	CL802	D4			R307	A3
C151	*C3	C616	H2	CL804	E3	L100	D1	R308	A3
C152	B3	C617	*H2	CL805	D3	L300	A1	R309	*A3
C153	*C3	C618	*H2	CL806	D4			R310	A3
C154	*C3	C619	*H2	CL807	E4	Q1	*A3	R311	A3
C155	B3	C620	*H1	CL808	C4	Q100	B2	R312	A3
C156	B3	C621	*H1	CL809	C4	Q101	*B2	R313	*C3
C157	*B3	C622	*H1			Q102	*B1	R314	*C3
C300	A3	C623	*J1	CN1	*A3	Q103	*B2	R315	*A3
C301	*D2	C624	H2	CN100	D1	Q104	*B1	R316	*A3
C302	*D2	C625	H2	CN101	B1	Q500	F2	R317	*A3
C303	A2	C626	H2	CN500	G1	Q501	*E1	R318	*A3
C304	*C3	C627	H1	CN501	E1	Q502	*E1	R319	*A3
C305	*C3	C628	H2	CN600	G1	Q503	F1	R320	*A3
C306	*A2	C629	H2	CN800	J1	Q504	*F1	R321	*A3
C307	A2	C630	H1			Q505	F1	R322	*A2
C308	*A2	C631	H1	D300	A2	Q506	*F1	R323	A2
C309	A2	C632	*G1	D301	A2	Q507	*F2	R324	*A2
C310	B1	C633	H1	D700	J1	Q508	F1	R325	*A3
C311	*A2	C634	H2	D701	J1	Q509	*F2	R326	*A3
C312	A1	C635	*G2	D800	*D4	Q510	F1	R500	E2
C313	A2	C636	*H1			Q511	*F2	R501	E3
C314	A1	C637	H1	E700	B1	Q512	*F2	R502	E3
C315	*A1	C638	H1	E701	A4	Q600	H2	R503	E3
C316	*A1	C639	*H1	E702	E2	Q601	*G1	R507	E2
C317	*A1	C640	H1	E703	J2	Q602	*G1	R508	F2
C502	*D2	C641	*H1	E704	*B1	Q603	H1	R509	F2
C503	*D2	C642	G1	E705	*A4	Q604	H1	R510	F2
C504	E1	C643	*H1	E706	*E2	Q605	H1	R511	F2
C505	E2	C644	G1	E707	*J2	Q606	H1	R512	F2
C506	G2	C700	B4					R513	F2
C507	G1	C701	*C3	FB100	C2	R100	B2	R514	F2
C508	*G1	C702	*C3	FB101	*C1	R101	B2	R515	G2
C509	G2	C703	*C3	FB102	*C1	R102	B2	R516	G2
C510	F2	C704	*C3	FB103	*C1	R103	B2	R517	*F1
C511	G2	C705	*D2	FB104	B1	R104	B2	R518	F2
C512	F2	C706	*E2	FB105	*B2	R105	D1	R519	*E1
C513	F2	C707	*D2	FB106	*B1	R106	B2	R520	*E1
C514	*G2	C708	*D2	FB500	G2	R107	B2	R521	*F1
C515	*F2	C709	B4	FB501	*F1	R108	*C1	R522	*E1
C516	*F1	C710	*B4	FB502	*G2	R109	D2	R523	*F1
C517	*F2	C713	B4	FB503	F1	R110	*C1	R524	G2

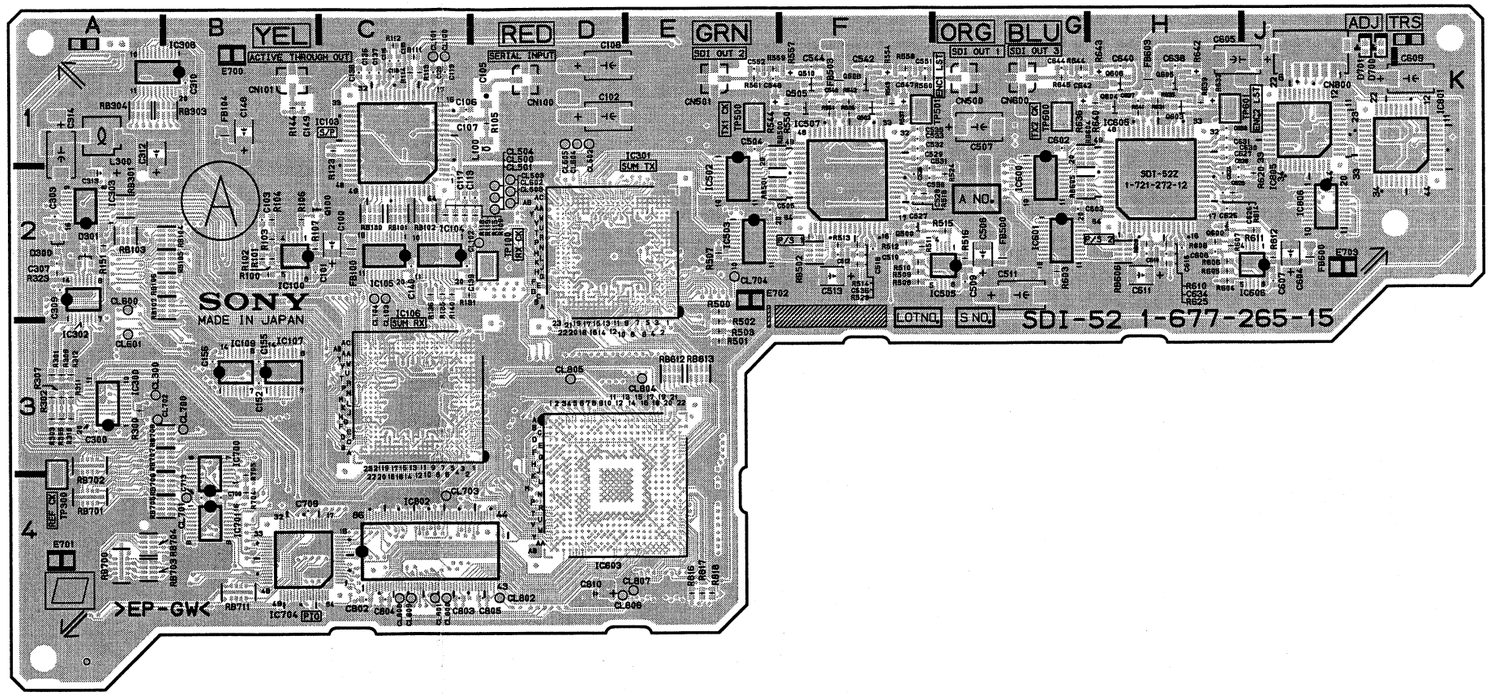

SDI-52 -A SIDE-
SUFFIX: -15

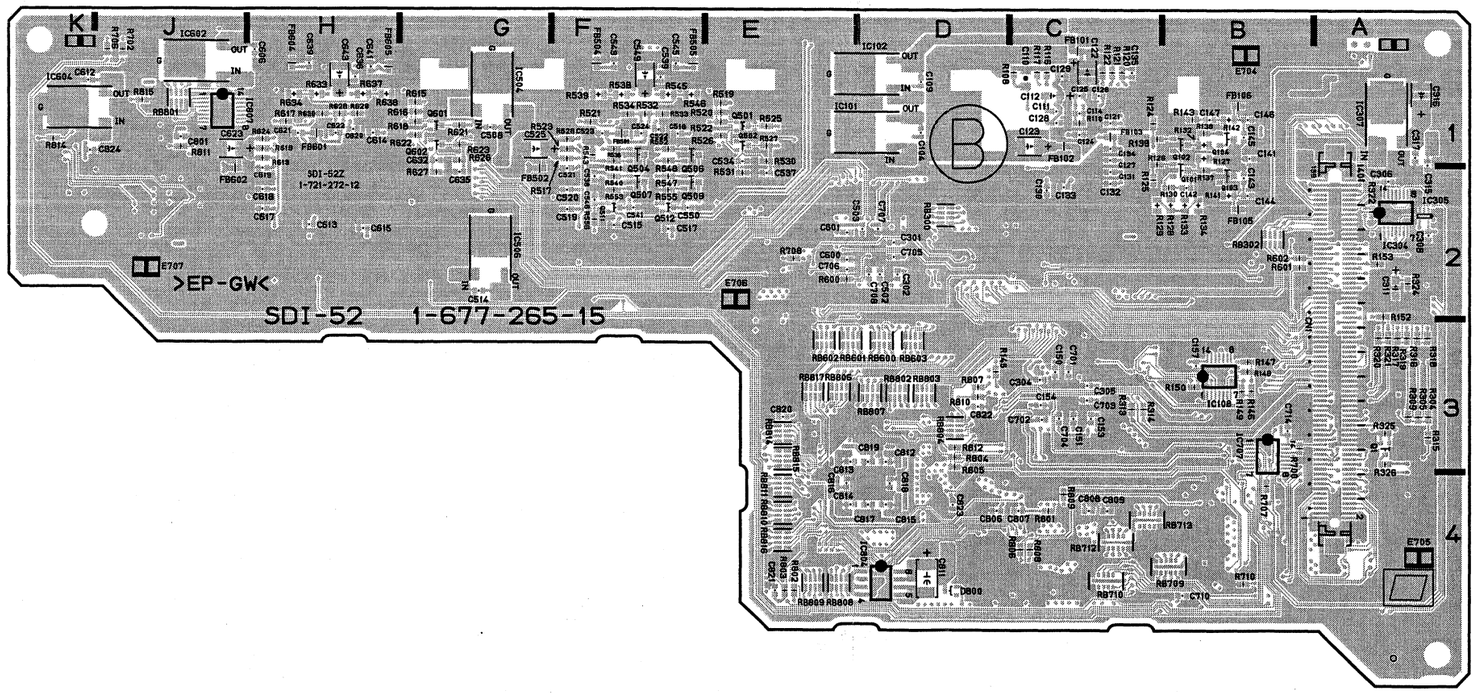

SDI-52 -B SIDE-
SUFFIX: -15

R525	*E1	R802	*E4
R526	*E1	R803	*E4
R527	*E1	R804	*D3
R528	*F1	R805	*D3
R529	F2	R806	*C4
R530	*E1	R807	*D3
R531	*E2	R808	*C4
R532	*F1	R809	*C4
R533	*F1	R810	*D3
R534	*F1	R811	*J1
R535	F1	R812	*D3
R536	*F1	R814	*K1
R537	F1	R815	*J1
R538	*F1	R816	E4
R539	*F1	R817	E4
R540	*F2	R818	E4
R541	*F1		
R542	F1	RB100	C2
R543	*F1	RB101	C2
R544	E1	RB102	C2
R545	*F1	RB103	A2
R546	*F1	RB104	B2
R547	*F2	RB105	B2
R548	*F1	RB106	B2
R549	F1	RB107	B2
R550	F1	RB300	*D2
R551	F1	RB301	A2
R552	*F1	RB302	*B2
R553	*F2	RB303	B1
R554	F1	RB304	A1
R555	*F2	RB500	E1
R556	*F2	RB501	E2
R557	F1	RB502	F2
R558	F1	RB600	*D3
R559	E1	RB601	*E3
R560	F1	RB602	*E3
R561	E1	RB603	*D3
R600	*E2	RB604	G1
R601	*B2	RB605	G2
R602	*B2	RB606	H2
R603	G2	RB612	E3
R604	H2	RB700	A4
R605	H2	RB701	A4
R606	H2	RB702	A3
R607	H2	RB703	A4
R608	H2	RB704	A4
R609	H2	RB705	B4
R610	H2	RB706	B4
R611	J2	RB707	B3
R612	J2	RB708	B3
R613	*H1	RB709	*B4
R614	H2	RB710	*C4
R615	*G1	RB711	B4
R616	*G1	RB712	*C4
R617	*H1	RB713	*C4
R618	*G1	RB801	*J1
R619	*H1	RB802	*D3
R620	J2	RB803	*D3
R621	*G1	RB804	*D3
R622	*G1	RB806	*E3
R623	*G1	RB807	*D3
R624	*H1	RB808	*E4
R625	H2	RB809	*E4
R626	*G1	RB810	*E4
R627	*G2	RB811	*E4
R628	*H1	RB813	E3
R629	*H1	RB814	*E3
R630	*H1	RB815	*E3
R631	H1	RB816	*E4
R632	H1	RB817	*E3
R633	*H1		
R634	*H1	TP100	D2
R635	H1	TP300	A4
R636	G1	TP500	E1
R637	*H1	TP501	F1
R638	*H1	TP600	G1
R639	H1	TP601	H1
R640	H1		
R641	H1	*:B SIDE	
R642	H1		
R643	H1		
R644	G1		
R645	G1		
R700	*B3		
R702	*J1		
R704	B4		
R705	B4		
R706	*J1		
R707	*B4		
R708	*E2		
R710	*B4		
R801	*C4		

R912	*J4	R1031	*M3	R1144	C2	R1291	*E2	R1420	*G5	R1590	*B5
R913	*J4	R1032	*M3	R1145	C2	R1292	*E2	R1421	*F5	R1591	*B5
R914	*J4	R1033	*M4	R1146	B2	R1293	C3	R1422	*F5	R1592	*B5
R915	*H4	R1034	*M4	R1148	*D5	R1294	C3	R1423	*H5	R1593	*C5
R916	*J3	R1035	*M5	R1149	E3	R1295	*C2	R1424	*H5	R1594	*D4
R917	*K4	R1036	*M4	R1150	*E3	R1296	*C2	R1427	*G5		
R918	*K4	R1037	*L4	R1151	*A2	R1297	*C2	R1428	*G5	RB700	*L5
R919	*K4	R1038	*L4	R1152	E3	R1298	C3	R1429	*G5	RB701	*L5
R921	*K4	R1039	*L5	R1153	*C2	R1299	*B2	R1430	*G5	RB702	*K4
R924	H4	R1040	*L5	R1154	B3	R1300	*B2	R1431	*G5	RB703	*L5
R925	H3	R1041	*L5	R1155	B3	R1301	*B2	R1432	*G5	RB704	*L5
R926	H3	R1042	*M3	R1156	B3	R1302	*C2	R1433	*H5	RB705	*L4
R927	H3	R1043	*M3	R1157	C3	R1303	*C2	R1435	*G5	RB719	*K5
R932	*J4	R1044	*M4	R1158	B2	R1304	*C2	R1436	*G5	RB720	*E2
R933	*J4	R1045	*M5	R1159	B2	R1305	*C3	R1437	*G5	RB800	*J5
R934	*J4	R1046	*M5	R1160	B2	R1310	D4	R1438	*G5	RB801	*J5
R935	*K4	R1047	*M5	R1161	*A4	R1311	C4	R1439	*G5	RB802	*J5
R938	*K4	R1048	*M5	R1200	E3	R1312	D4	R1440	*G5	RB803	*J5
R939	*K4	R1049	*M3	R1201	E3	R1313	C4	R1441	*G5	RB804	*H5
R953	*J3	R1050	*M3	R1202	E3	R1314	*D3	R1442	*G5	RB805	*J5
R954	*J3	R1051	*M4	R1203	E3	R1315	*D3	R1443	*G5	RB806	*J5
R955	*H4	R1052	*M3	R1204	*E3	R1316	*D3	R1444	*F5	RB807	*J5
R956	*J3	R1053	*M3	R1209	D4	R1317	*C2	R1445	*F5	RB808	*J5
R957	*K4	R1054	*M4	R1210	D3	R1318	C2	R1446	*G5	RB809	*H5
R960	*J4	R1055	*M5	R1211	D3	R1319	*C2	R1447	*G5	RB1100	*D5
R961	*J4	R1056	*M5	R1212	C4	R1320	*C2	R1448	*G5	RB1101	*D5
R962	*L4	R1057	*M5	R1213	C4	R1321	*C2	R1449	*G5	RB1500	*C5
R963	*L3	R1058	*M5	R1214	C4	R1322	*C2	R1450	H5	RB1501	*D4
R964	*L4	R1061	M3	R1215	C4	R1323	*C2	R1451	*F5	RB1502	C5
R965	*J4	R1062	M3	R1216	C4	R1324	*C2	R1452	*E5	RB1503	D5
R966	*L4	R1063	M4	R1217	C4	R1325	*D4	R1453	*E5	RB1504	*B4
R967	*L3	R1064	M5	R1218	C4	R1326	*D4	R1454	*E5	RB1505	*B4
R968	*L4	R1065	M5	R1219	C4	R1327	*C3	R1455	*E5	RB1506	*A4
R969	*L4	R1066	M5	R1220	*C4	R1328	*C3	R1456	*E5	RB1507	*A4
R970	*L3	R1069	*K3	R1221	*C4	R1329	*C3	R1457	*G5	RB1508	*B5
R971	*L4	R1070	*J3	R1222	*C4	R1330	*D3	R1500	D5	RB1509	*B5
R972	*J4	R1072	G1	R1223	C3	R1331	*D3	R1501	D5		
R975	*L4	R1073	F1	R1225	C3	R1332	*D2	R1502	*D4	RV1	N3
R976	*L4	R1074	K4	R1226	D3	R1333	*D2	R1503	*C5	RV2	P3
R977	*L4	R1075	K4	R1227	*D4	R1334	*C2	R1504	*C5		
R979	*M5	R1076	L4	R1231	*D3	R1335	*D2	R1505	*C5	THP100	*E3
R980	*M5	R1077	*M5	R1232	*D3	R1336	C3	R1506	*C5		
R981	*M5	R1078	*M5	R1236	*E3	R1337	*D3	R1507	*C5	TP103	P3
R982	*M3	R1079	*K3	R1237	*E4	R1338	*D3	R1508	*C5	TP105	J1
R983	*M4	R1080	*J3	R1238	*D4	R1339	*D3	R1509	*C5	TP300	J1
R984	*M4	R1081	*J3	R1239	*C3	R1340	D1	R1510	*C5	TP503	N2
R985	*M5	R1082	*H4	R1240	*D3	R1341	*C4	R1511	*C5	TP504	N1
R986	M3	R1083	*M3	R1242	*D4	R1342	*C3	R1512	*C5	TP505	N1
R987	M3	R1084	*M3	R1243	*D3	R1343	*C4	R1513	*D5	TP506	N1
R988	M4	R1085	*M3	R1244	*C3	R1344	*C3	R1514	*D5	TP800	G3
R989	M5	R1086	*M3	R1245	*E4	R1345	*D2	R1515	*D5	TP900	H1
R990	M3	R1087	*M4	R1246	*C3	R1346	*D2	R1516	*D5	TP901	H1
R991	M3	R1088	*M4	R1247	*C3	R1347	*D4	R1517	*D5	TP902	H1
R992	M3	R1089	*M5	R1248	*D3	R1348	*D4	R1518	*D5	TP903	G1
R993	M4	R1090	*M5	R1249	*D3	R1349	*C4	R1519	*A5	TP904	G1
R994	M4	R1091	*L4	R1250	*D3	R1350	*C4	R1520	*A5	TP905	G1
R995	M4	R1101	*A2	R1252	*C3	R1351	*D4	R1521	B4	TP906	F1
R996	*M3	R1102	*A2	R1253	*D3	R1352	*C4	R1522	B4	TP907	F1
R997	M3	R1103	*A2	R1254	*E3	R1353	*C4	R1523	B4	TP908	M3
R998	M4	R1104	*A2	R1255	*D3	R1354	D5	R1524	B4	TP909	M3
R999	*M5	R1105	*A2	R1256	*D3	R1355	D5	R1525	*J2	TP910	M4
R1000	M3	R1106	*A2	R1257	*D3	R1356	D3	R1526	*J2	TP911	M5
R1001	M3	R1107	A2	R1258	*D3	R1381	E4	R1527	*J2	TP1100	A2
R1002	M4	R1108	*A2	R1259	*C3	R1382	E3	R1530	*C5	TP1200	E1
R1003	M5	R1109	A1	R1260	*D3	R1383	D3	R1531	*C5	TP1201	E1
R1004	M3	R1110	*A1	R1261	*D4	R1384	D3	R1532	*C5		
R1005	M3	R1111	*A1	R1262	*D3	R1385	*C3	R1533	*C5	X300	J1
R1006	M4	R1112	*A1	R1263	*D3	R1386	E3	R1534	*C5	X301	J1
R1007	M4	R1113	*A1	R1264	*C3	R1387	*B2	R1535	*C5	X302	*J2
R1008	*M3	R1114	*A1	R1266	*E3	R1388	*F4	R1536	*D5	X900	*J3
R1009	*M3	R1115	*A1	R1267	*D4	R1389	*F4	R1537	*D5	X901	*K3
R1010	*M3	R1116	*A1	R1269	*D4	R1390	*E4	R1538	A4	X1203	*C3
R1011	*M3	R1117	*B1	R1270	*E3	R1391	*D4	R1539	A5	X1204	D3
R1012	*M4	R1118	*B1	R1271	*E4	R1392	*D4	R1540	A4	X1205	D3
R1013	*M4	R1119	*B1	R1272	*E3	R1393	*F4	R1541	A5		
R1014	*M4	R1120	A2	R1274	C2	R1401	*G5	R1542	*B5	*:B SIDE	
1015	*M5	R1121	*A2	R1275	D3	R1402	*G5	R1543	*B5		
016	*M2	R1122	*B1	R1276	D3	R1403	*G5	R1544	*D5		
17	*M3	R1124	*A2	R1277	D3	R1404	*F5	R1545	*D5		
1	*M4	R1126	*A2	R1278	D2	R1405	*F5	R1546	*D5		
	*M4	R1127	*B2	R1279	D2	R1406	*H5	R1547	*D5		
	M2	R1129	*B2	R1280	C2	R1407	*H5	R1548	L5		
	3	R1130	*B1	R1281	C2	R1409	*G5	R1549	M5		
		R1132	*B2	R1282	*D2	R1410	*G5	R1550	M5		
		R1135	*A2	R1283	*D2	R1411	*G5	R1551	L5		
		R1136	*A2	R1284	B2	R1412	*F5	R1552	M5		
		R1138	*A2	R1285	C2	R1413	*F5	R1553	L5		
		1139	*C2	R1286	C2	R1414	*F5	R1554	*D4		
		140	*C2	R1287	C2	R1415	*F5	R1555	*C5		
		1	*C2	R1288	*D2	R1416	*H5	R1556	*D4		
			*C2	R1289	C3	R1418	*G5	R1557	*A4		
			C2	R1290	C3	R1419	*G5	R1558	*B5		

VPR-64
SUFFIX: -15

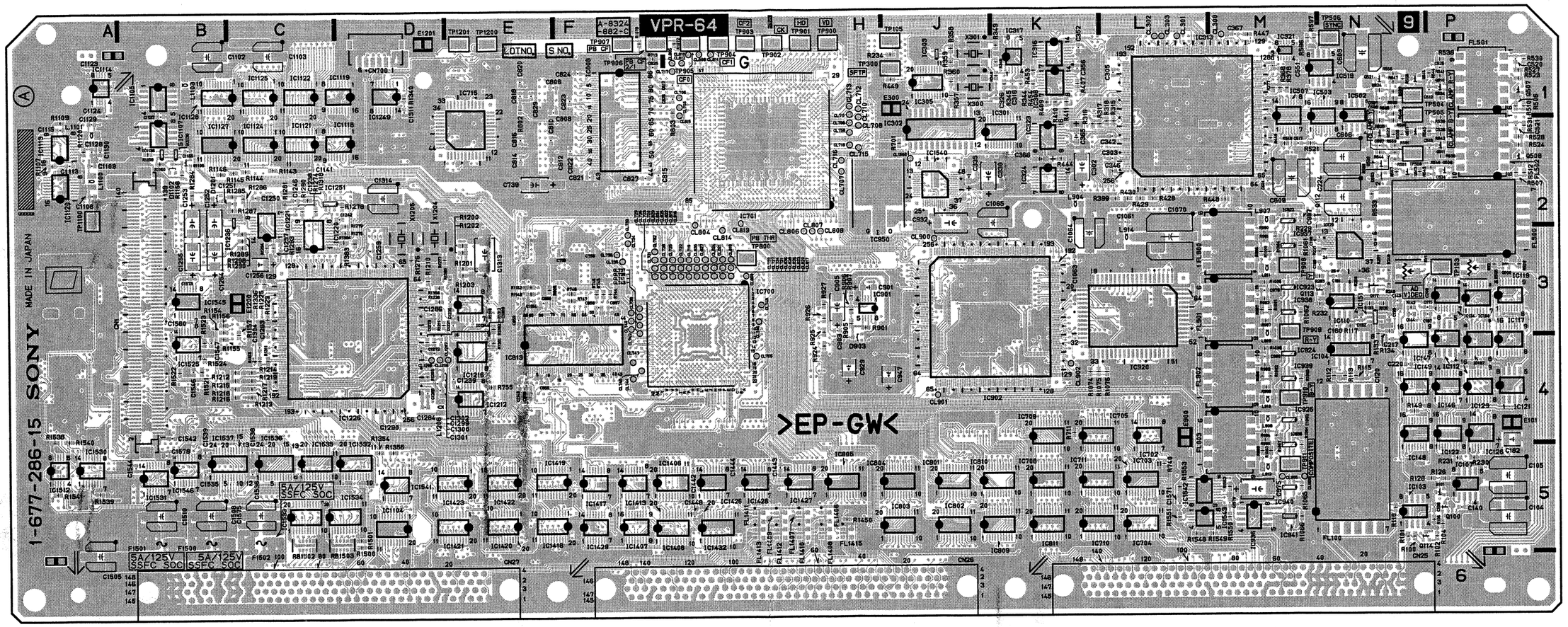

Components locations list; previous page

VPR-64 -A SIDE-
SUFFIX: -15

4-70 (a)

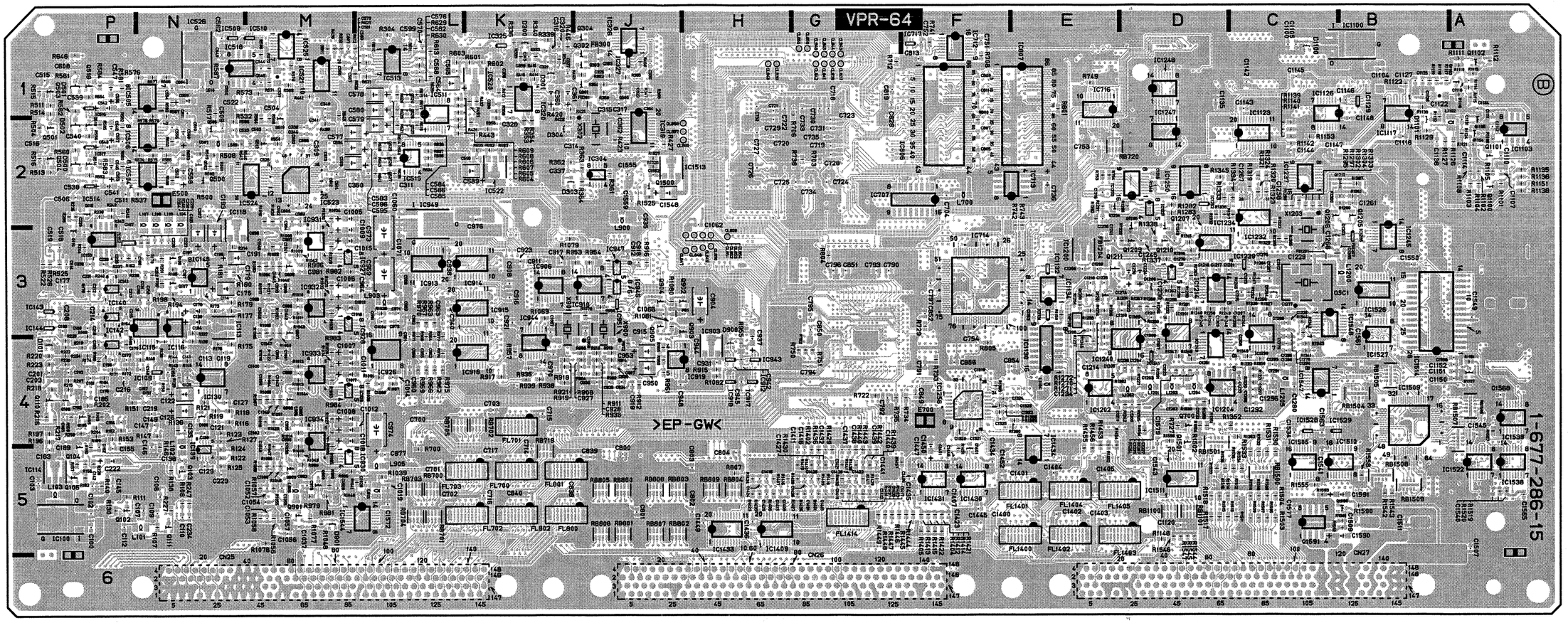

VPR-64 -B SIDE-
SUFFIX: -15

VPR-91 (1-861-999-11,12)

C100	*P5	C220	N4	C547	*P1	C755	F3	C959	L3	C1107	*A2	C1273	D3	C1445	*F5	CL739	F3	CN100	H4	IC110	N3	IC802	J5	IC1235	*B3	L913	*L5	Q1208	*D3	R195	*N3	R365	*J1	R556	*P2
C101	J2	C222	*P5	C548	*P2	C756	F3	C960	*L4	C1108	A2	C1274	*D3	C1446	*F5	CL740	F3	CN101	H4	IC112	P4	IC803	J5	IC1236	C2	L914	L3	Q1209	*D3	R196	*P4	R366	*J1	R557	N2
C102	*P5	C223	*N5	C549	*N1	C790	*G3	C961	*L4	C1109	A2	C1275	*D3	C1447	*F5	CL741	F3	CN700	D1	IC113	*N3	IC804	J5	IC1237	*C2	L1100	A2	Q1210	*D3	R197	*P4	R368	M1	R558	N1
C103	*P5	C224	N2	C550	*N1	C791	*F4	C962	*L3	C1110	*A2	C1276	*C3	C1448	G5	CL742	F3			IC114	*P5	IC805	H5	IC1238	*D3	L1101	A2	Q1211	*D3	R198	*N3	R377	M1	R559	N2
C104	P5	C225	*P3	C551	M1	C792	*G4	C963	*L3	C1111	*A1	C1277	*C3	C1449	*H5	CL743	F3	D100	*N4	IC115	*P4	IC806	*F1	IC1239	*C3	L1102	*A2	Q1212	*B2	R199	*N3	R378	M1	R560	*P2
C105	P5	C226	*P3	C552	*N2	C793	*G3	C964	*L3	C1112	*A2	C1278	*C3	C1450	*F5	CL744	F4	D101	*P4	IC116	*N4	IC807	*F1	IC1240	*D3	L1104	*E4	Q1500	*J2	R201	*N3	R399	L2	R561	*P1
C106	*N5	C227	*N3	C553	*P2	C794	*G4	C968	*L3	C1113	A2	C1279	*C4	C1451	*F5	CL745	F4	D102	*P5	IC117	P4	IC808	F1	IC1241	*D4	L1200	*B3	Q1501	*D4	R202	*P4	R407	K1	R562	*P1
C107	*N5	C228	*N3	C554	*N1	C795	*G3	C969	*L3	C1114	*A2	C1280	*C4	C1452	*F5	CL746	G3	D103	*J1	IC118	*N3	IC809	J5	IC1243	*D4	L1201	*D4	Q1590	*B5	R203	*P4	R409	K1	R564	*M2
C108	P5	C229	*N3	C555	*P1	C796	*G3	C970	*K4	C1115	A2	C1281	*D4	C1505	A5	CL747	F4	D104	*N4	IC119	P3	IC810	J5	IC1244	E3	L1202	*D4	Q1591	*C5	R204	*P4	R410	K1	R565	*N2
C109	*N5	C230	*N3	C556	*N2	C797	*F3	C971	*L3	C1116	*B2	C1282	*D4	C1507	*A5	CL748	G3	D300	*K1	IC120	N3	IC811	K5	IC1245	*B3	L1203	*D4			R207	*P4	R411	K1	R566	*N1
C110	*N5	C231	*P3	C557	*P2	C800	J5	C972	*L3	C1117	*B1	C1283	C3	C1508	B5	CL755	G4	D301	*K1	IC121	P4	IC813	E4	IC1247	*D2	L1204	*D4	R100	N5	R214	*N3	R412	*K1	R567	*N1
C112	*P5	C232	*P3	C558	*N2	C801	J5	C973	L4	C1118	*A1	C1284	D4	C1509	*B5	CL756	H2	D302	*K1	IC122	P5	IC901	H3	IC1248	*D1	L1205	*C4	R101	N5	R215	*P4	R414	*K1	R568	*M2
C113	*N4	C233	*P3	C559	*N1	C802	J5	C974	L4	C1120	*D5	C1285	D4	C1510	B5	CL800	G3	D303	*K2	IC126	P5	IC902	J3	IC1249	D1	L1206	D4	R102	P5	R216	*P4	R415	*K1	R569	*M1
C114	*N3	C234	*N5	C560	*N2	C803	J5	C975	M5	C1122	*B1	C1286	D3	C1511	*B5	CL804	G2	D304	*K2	IC129	P4	IC903	*H4	IC1250	*D2			R103	*N3	R217	*P4	R416	*K1	R570	*M1
C119	*N4	C235	*P5	C562	*N1	C804	*H5	C976	*K2	C1123	A1	C1287	*C3	C1534	*C4	CL805	G1	D500	*P2	IC130	*N4	IC906	*K3	IC1251	C2	OSC1	*C3	R104	P5	R218	*P4	R420	*K1	R571	*M1
C120	N4	C236	*N3	C564	K1	C805	*F2	C977	*L5	C1124	A1	C1288	*C3	C1535	B5	CL806	H3	D501	*P1	IC132	P4	IC910	*J3	IC1252	*D2			R105	*P3	R219	*P4	R421	*K1	R572	*M1
C121	*N4	C302	K2	C565	*L1	C806	F1	C978	*M5	C1125	*B1	C1289	*C4	C1536	C5	CL807	H3	D502	*P2	IC134	P3	IC912	*H4	IC1253	*D2	Q100	P5	R106	P5	R220	*P4	R422	*K2	R573	*M1
C122	*N4	C303	L2	C566	*M1	C807	*F2	C979	M3	C1126	*B1	C1290	D4	C1538	C5	CL808	H3	D503	N2	IC139	*N5	IC913	*L3	IC1256	*F4	Q101	P5	R107	*N5	R221	N3	R423	*J2	R574	*N2
C125	*N4	C305	L1	C567	*L1	C808	F1	C980	M4	C1127	*B1	C1291	*C4	C1539	B5	CL809	G1	D504	*N1	IC140	*P3	IC914	*L3	IC1401	F5	Q102	*P5	R108	*N5	R222	*P4	R427	*J2	R575	*N2
C127	*N4	C307	*M1	C568	*L1	C809	*F1	C981	*M3	C1128	A2	C1292	*C4	C1540	*A5	CL810	G1	D700	F2	IC141	*P3	IC915	*L3	IC1406	F5	Q103	*N5	R110	N5	R223	*P4	R428	L2	R576	*N1
C129	*N5	C309	*M2	C569	*L1	C810	E2	C982	*M5	C1129	A1	C1293	*C4	C1541	*C5	CL811	G1	D900	*H4	IC142	*P4	IC916	*L4	IC1407	F5	Q104	*P5	R111	*P5	R224	*P4	R429	L2	R577	*N1
C130	*N4	C311	*L2	C570	*L1	C811	*F1	C983	*M2	C1130	A2	C1294	*C4	C1542	B4	CL812	G1	D901	*M5	IC143	*P3	IC917	*H4	IC1408	F5	Q105	*P4	R112	N4	R225	*P4	R430	L2	R578	*N1
C131	*N3	C313	*K1	C573	*L1	C812	E2	C984	*M2	C1131	*A2	C1295	*C4	C1543	*D5	CL813	G2	D902	*K3	IC144	*P3	IC918	*H4	IC1409	*H5	Q106	*P5	R113	N4	R226	*P4	R431	*K2	R579	*N1
C132	N3	C314	*K2	C576	*L1	C813	*F1	C985	*M4	C1134	*A1	C1296	*C4	C1544	B5	CL814	G3	D903	H3	IC145	*N3	IC919	*J4	IC1413	F5	Q107	*N3	R115	N4	R227	*N5	R432	*K1	R580	*P2
C133	N3	C315	*J1	C577	*M2	C814	E2	C986	*M4	C1135	*D1	C1297	*C4	C1545	*A4	CL815	G1	D904	J2	IC146	P4	IC920	L3	IC1417	F5	Q108	*N3	R116	*N4	R228	*P5	R433	*K1	R581	*P1
C134	*N3	C316	*K1	C578	*L1	C815	F2	C987	*M3	C1136	*B2	C1298	*C4	C1546	B4	CL816	G3	D1100	*C1	IC147	N4	IC922	M2	IC1418	F5	Q109	*P4	R117	N3	R229	M3	R435	*M1	R582	*P2
C135	*N4	C317	*J1	C579	*L2	C816	E2	C988	*M3	C1137	B1	C1299	D4	C1547	B4	CL817	G3	D1101	*B2	IC148	N5	IC923	M3	IC1419	F5	Q110	*P4	R118	*N4	R230	P5	R439	*M2	R583	*P2
C136	*P4	C318	K1	C580	*L1	C817	G1	C989	*M4	C1141	C2	C1300	D4	C1548	J2	CL818	G3	D1103	*B1	IC149	N4	IC924	M4	IC1420	E5	Q111	*N5	R119	*N4	R231	P5	R440	M2	R584	*P1
C137	P3	C320	*K1	C581	*L1	C818	E1	C990	*M4	C1142	*C1	C1301	D4	C1549	*A3	CL819	G3	D1200	*D3	IC150	P3	IC925	M4	IC1421	E5	Q112	M2	R120	*N4	R232	N3	R441	*M1	R585	*P2
C138	*N5	C321	*K1	C582	*L1	C819	*G1	C991	*L3	C1143	*C1	C1302	D4	C1550	*B3	CL820	G3	D1201	B2	IC151	N3	IC926	*L4	IC1422	E5	Q113	N3	R121	*N4	R233	N3	R443	*K2	R586	*M1
C140	P5	C322	*J1	C583	*L2	C820	E1	C992	*M2	C1144	*C2	C1303	D4	C1552	*J2	CL821	G3	D1203	*C3	IC152	*P3	IC927	*M3	IC1423	E5	Q114	N5	R122	*N5	R234	J1	R444	K2	R587	*N1
C141	*N4	C325	*J1	C584	*L1	C821	F2	C993	*M3	C1145	*C1	C1304	C4	C1555	*J2	CL822	G3	D1204	*C3	IC153	*P3	IC928	*M3	IC1426	G5	Q115	*P2	R123	*N4	R235	*P2	R445	*J1	R588	N2
C142	*P5	C326	K1	C585	*L2	C822	F2	C994	*M4	C1146	*B1	C1305	*D3	C1556	*A4	CL823	G3	D1205	*B3	IC154	*P5	IC929	*M4	IC1427	H5	Q116	*P3	R124	*N5	R236	*P2	R446	*K1	R589	N1
C143	N3	C327	*K1	C586	*L1	C823	F1	C995	*M4	C1147	*C2	C1306	*D4	C1559	*J2	CL824	G3	D1401	*F5	IC301	K2	IC930	*M5	IC1428	G5	Q117	N3	R125	*N5	R237	*P3	R447	M1	R590	N2
C144	N3	C328	*K2	C587	N1	C824	F1	C996	*M3	C1148	*B2	C1307	*D4	C1560	B3	CL825	G3			IC302	J2	IC931	*M3	IC1429	F5	Q300	*J1	R126	P5	R238	*P3	R448	M2	R591	N2
C145	*P5	C330	*K1	C588	N1	C825	F1	C997	M2	C1149	E4	C1308	*C3	C1561	*B3	CL826	G3	E101	P4	IC303	J1	IC932	*M3	IC1430	*F5	Q301	*J1	R127	*N4	R239	*P2	R449	J1	R592	N1
C146	*N5	C333	*J1	C589	K2	C826	G1	C998	*M3	C1150	*A4	C1309	*D3	C1563	*C4	CL827	G3	E300	J1	IC304	*J2	IC933	*M4	IC1431	*F5	Q302	*J1	R128	P5	R240	*P3	R450	*J1	R593	N1
C147	*N4	C335	J2	C590	*K2	C827	F2	C999	*M3	C1151	*A4	C1310	*D3	C1565	*A5	CL828	G3	E500	*N2	IC305	J1	IC934	*M5	IC1432	G5	Q303	*J1	R130	*P5	R242	*P2	R453	K1	R594	*L1
C148	*N4	C336	*J1	C593	*M2	C828	*G1	C1000	*M4	C1152	*A4	C1311	*D1	C1568	*A4	CL829	G3	E700	*F4	IC308	K1	IC935	M5	IC1433	*H5	Q304	*J1	R131	N3	R243	*P2	R454	K1	R595	*L1
C149	*N4	C337	*K2	C594	*M2	C829	E1	C1001	*M4	C1153	*E3	C1312	*C3	C1569	*M5	CL834	G3	E900	L4	IC313	L1	IC936	M5	IC1434	*E5	Q500	*N2	R132	N3	R244	*P3	R500	*N2	R596	M1
C150	*N4	C338	K2	C595	*L2	C838	J5	C1002	*M4	C1154	E3	C1313	E3	C1570	M5	CL835	G3	E1200	C3	IC316	K1	IC937	M3	IC1505	*C5	Q501	*P2	R133	N3	R245	*P2	R501	*N2	R597	M1
C151	*N4	C339	*M2	C596	*L2	C839	J5	C1003	M4	C1200	*E3	C1314	D2	C1571	L5	CL836	G3	E1201	D1	IC317	K1	IC938	M3	IC1509	*B4	Q502	*N2	R134	N3	R246	*N3	R502	*N2	R598	*N2
C152	*N4	C340	*M1	C597	N2	C840	K5	C1004	*L3	C1203	*D4	C1315	*D2	C1572	*L5	CL837	*G1			IC319	*J1	IC939	M4	IC1510	*C5	Q503	*P1	R135	*N4	R247	*N5	R504	*P2	R599	*N1
C154	*P4	C341	*M2	C598	*M2	C849	*F4	C1005	*M2	C1204	*D4	C1316	*E2	C1573	B3	CL838	*G1	F1500	B5	IC320	*K1	IC940	M5	IC1511	*D5	Q504	*P2	R136	*N4	R248	N3	R505	P3	R600	*N2
C155	*P5	C342	L2	C599	*L1	C850	*G3	C1006	*M3	C1205	*E4	C1319	*F4	C1575	C5	CL839	*H1	F1501	B5	IC321	M1	IC941	M5	IC1512	A5	Q505	*N2	R137	*N3	R249	N3	R506	P1	R601	*K1
C156	*N3	C344	*M2	C600	*M2	C851	*G3	C1007	*M4	C1206	*E3	C1320	*F4	C1577	*C5	CL840	*H1	F1502	C5	IC323	K2	IC943	*H4	IC1513	*J2	Q506	P3	R138	*N5	R250	N3	R507	P2	R602	*K1
C158	*N3	C346	L2	C601	M2	C852	*F3	C1008	*M4	C1207	*C3	C1321	*F4	C1578	B5	CL841	*G1			IC324	K2	IC944	*K3	IC1514	*A4	Q507	P1	R139	*N4	R251	N3	R508	*N2	R603	*L1
C160	N3	C348	M1	C602	*M2	C853	E4	C1014	*L4	C1208	*D4	C1322	*E4	C1579	*D4	CL842	*G1	FB1	*J3	IC325	*K1	IC945	*J3	IC1522	*A5	Q508	P2	R140	*P5	R252	*N3	R509	*N2	R604	*L2
C161	N3	C350	*L2	C603	N1	C854	*F4	C1015	*M3	C1209	*E3	C1323	*E4	C1590	*B5	CL843	*G1	FB300	*J1	IC326	*J1	IC947	*J3	IC1525	B4	Q509	P2	R142	N3	R253	P5	R510	P1	R605	*L2
C162	*P5	C352	K1	C604	*N1	C855	E4	C1016	*M3	C1210	*E4	C1324	*P4	C1591	*B5	CL844	*G1	FB301	*J1	IC327	*J1	IC949	*L2	IC1526	*B3	Q510	P1	R143	*N4	R254	*P5	R511	*P1	R606	*L1
C163	*P4	C356	K1	C605	*M2	C856	*F4	C1017	*M4	C1211	*D3	C1325	*P4	C1602	*J4	CL845	*G1	FB1201	*C3	IC328	*J2	IC950	J2	IC1527	*B4	Q511	P2	R144	*N4	R255	P5	R512	P2	R607	*L2
C166	*P3	C358	*K1	C606	N2	C857	F3	C1018	*M4	C1213	*C3	C1326	E2	C1606	*H4	CL846	*G1	FB1204	*E3	IC502	N2	IC951	*J3	IC1528	*C4	Q512	*M2	R145	*N4	R256	*P5	R513	*P2	R608	*L1
C167	*P3	C359	*K1	C608	*P1	C858	F3	C1019	*L5	C1214	*E4	C1400	*F5	C1607	*J4	CL847	*H3	FB1207	*C3	IC503	M2	IC952	H4	IC1529	*C4	Q513	N2	R146	*N5	R257	P5	R514	*P1	R609	*L1
C168	*P4	C360	*K1	C609	M2	C859	E3	C1028	*L5	C1215	*C3	C1401	*F5	C1612	*H5	CL848	*H3			IC504	*N2	IC1100	*B1	IC1530	A5	Q514	*P2	R147	*N4	R258	*N5	R515	*P1	R610	*L1
C170	*N4	C362	*J2	C610	*N1	C860	E3	C1037	*M5	C1216	*D3	C1402	*E5			CL849	*H3	FL100	N5	IC505	*N1	IC1101	*B1	IC1531	B5	Q515	N1	R148	*N4	R259	*N3	R516	*P2	R611	*L1
C171	P3	C364	*J1	C611	*N1	C901	H3	C1038	*M5	C1217	*D3	C1403	*E5	CL300	M1	CL850	*H3	FL500	P2	IC506	*N2	IC1103	*A2	IC1532	D5	Q516	*P1	R149	N4	R260	*P5	R517	*N1	R612	*L1
C172	*P4	C365	K2	C612	*M2	C903	*H3	C1039	*M5	C1218	*E3	C1404	*E5	CL301	L1	CL851	*H3	FL501	P1	IC507	M2	IC1104	D5	IC1533	C5	Q517	N2	R150	*N4	R261	N5	R518	*M1	R613	*L1
C175	*N3	C366	K2	C613	*M2	C904	J3	C1040	*M5	C1220	*C3	C1405	*E5	CL302	L1	CL852	*H3	FL502	P2	IC509	*N1	IC1105	B1	IC1534	C5	Q518	*P2	R151	*P4	R262	N5	R519	*M1	R614	*L2
C176	*P4	C367	M1	C614	*M2	C905	H3	C1041	*M3	C1221	E3	C1406	*F5	CL303	L1	CL853	*H3	FL700	*K5	IC510	*M1	IC1107	B2	IC1535	C5	Q519	*M2	R152	*P4	R304	*L1	R521	M2	R615	*L1
C177	*P3	C503	*M2	C700	*L4	C907	*J4	C1042	*M3	C1222	*D3	C1407	*F5	CL705	G1	CL854	*H3	FL701	*K4	IC511	*L2	IC1113	A2	IC1536	C5	Q520	N2	R153	*P4	R311	*M1	R522	*P3	R616	*L2
C178	*N3	C504	*M1	C701	K5	C908	*K3	C1043	*M4	C1223	*D4	C1408	*H5	CL706	G1	CL855	*G1	FL702	*K5	IC513	*L1	IC1114	A1	IC1537	B5	Q521	N1	R154	*P3	R315	L2	R523	P1	R617	*L1
C179	*N3	C506	*P2	C702	K5	C911	*K3	C1045	*M3	C1224	*D3	C1410	*G5	CL707	H2	CL856	*G1	FL703	*K5	IC514	*P2	IC1117	*B1	IC1538	*A5	Q522	N2	R155	*P4	R316	K2	R524	P2	R618	*L2
C180	*P3	C507	*N2	C703	K4	C912	*J3	C1046	*M3	C1225	*D4	C1411	*G5	CL708	H2	CL857	*H2	FL800	*J5	IC515	*L2	IC1118	D2	IC1539	*A4	Q523	*L2	R156	*P5	R317	L2	R525	*P3	R620	*L1
C181	*P4	C509	*N2	C704	*P2	C915	*J4	C1047	*M3	C1227	*D4	C1412	*G5	CL709	H2	CL858	*H2	FL801	*J5	IC516	*P1	IC1119	D1	IC1540	J2	Q524	*L1	R157	*P5	R318	L2	R526	*P3	R621	*L2
C182	P4	C510	*N2	C714	K5	C916	*K3	C1048	*M3	C1228	*E3	C1413	*H5	CL710	H1	CL859	*H3	FL802	*K5	IC517	*P2	IC1120	A2	IC1541	D5	Q525	*L2	R159	*P4	R332	*M1	R527	P1	R623	*L1
C183	*P5	C511	*P2	C715	*K4	C917	*K3	C1049	*M4	C1229	*C3	C1415	*G5	CL711	H1	CL860	*H2	FL900	M3	IC518	*N1	IC1121	C2	IC1542	L5	Q526	*L1	R160	*P5	R333	*K1	R528	P2	R624	N1
C185	*P4	C512	P1	C716	K5	C918	*J3	C1050	*M4	C1231	*D3	C1416	*G5	CL712	H1	CL861	G3	FL901	M3	IC519	M1	IC1122	C1	IC1543	L5	Q527	*L2	R162	*P3	R335	*K1	R529	P3	R625	N2
C186	*P3	C513	P2	C717	K5	C919	*J4	C1052	*M5	C1232	*D4	C1417	*G5	CL713	H1	CL900	J3	FL902	M4	IC520	*K1	IC1123	*C2	IC1544	*M5	Q528	*L2	R163	*P4	R336	*K1	R530	P1	R626	*L1
C187	*N3	C514	*P3	C718	*G1	C921	*K3	C1053	*M5	C1233	*C4	C1418	*H5	CL715	H2	CL901	J4	FL903	M4	IC521	*M1	IC1124	C2	IC1545	B3	Q700	*D4	R164	*N3	R339	*K1	R531	P2	R627	*L1
C189	*P4	C515	*P1	C719	*G2	C923	*K3	C1054	*M5	C1234	*E4	C1420	*G5	CL716	H2	CL902	K4	FL1400	*E5	IC522	*K2	IC1125	C1	IC1546	B5	Q900	*M5	R165	*P4	R340	K1	R532	*N1	R628	*L1
C191	*N3	C516	*P2	C720	*H2	C924	*J4	C1055	*M5	C1235	E3	C1421	*G5	CL717	G1	CL906	M5	FL1401	*E5	IC523	*M2	IC1126	*C1	IC1547	*C4	Q901	*M5	R166	*P4	R343	*K1	R533	N2	R629	*L1
C192	*P4	C517	M2	C721	*H1	C925	*J4	C1056	*M5	C1236	*E2	C1422	*G5	CL718	H2	CL1205	D4	FL1402	*E5	IC524	*M2	IC1127	C2	IC1548	*C3	Q902	*H3	R167	*N2	R344	K1	R534	P1	R630	*L1
C193	*N3	C518	*P3	C722	*H1	C926	*J4	C1057	*M5	C1237	C3	C1423	*F5	CL719	G3	CL1206	D4	FL1403	*E5	IC525	*M1	IC1128	C1			Q903	*H3	R168	*N3	R345	K1	R535	P2	R631	*L1
C195	*N3	C519	*P3	C723	*G2	C927	*J4	C1060	*L2	C1238	C2	C1424	*H5	CL720	G3	CL1207	E4	FL1404	*E5	IC526	*N1	IC1129	*B1	L101	*N5	Q904	*J3	R169	*P4	R346	K1	R536	*N2	R632	*K2
C196	*N3	C520	P1	C724	*G2	C928	*J4	C1061	L2	C1239	E4	C1426	*G5	CL721	G3	CL1500	J2	FL1405	*E5	IC700	G3	IC1130	*E4	L102	*N5	Q905	*J3	R170	*N3	R347	*J1	R537	*N2	R633	*K2
C197	*N3	C521	P2	C725	*G2	C929	H4	C1062	*H2	C1241	*E3	C1427	*G5	CL722	G3	CL1601	J4	FL1406	H5	IC701	G2	IC1131	*E3	L104	*N3	Q906	*M3	R171	*P4	R348	K1	R538	P1	R634	*L2
C198	N3	C522	*N1	C726	*H2	C930	*J4	C1063	K3	C1242	D2	C1428	*G5	CL723	G3	CL1602	J4	FL1407	H5	IC702	L5	IC1132	*E3	L105	*N3	Q907	*M3	R172	*P4	R349	K1	R539	P2	R635	*K2
C199	N3	C523	*N2	C727	*H2	C931	*H4	C1064	K3	C1245	*D3	C1429	*H5	CL724	G3	CL1603	J4	FL1408	H5	IC703	L5	IC1134	*E3	L106	*N3	Q908	*M4	R173	*N3	R350	*J1	R540	P2	R636	*L2
C201	*P4	C524	P2	C728	*G2	C932	J2	C1065	K2	C1246	C2	C1431	*G5	CL725	G3	CL1604	J4	FL1409	H5	IC704	L5	IC1200	*E3	L107	*N3	Q909	*M5	R174	*P4	R351	*J1	R541	P1	R637	*L2
C202	*P4	C525	P1	C729	*H2	C935	*J2	C1066	*J3	C1249	*D3	C1432	*G5	CL726	F3	CL1605	J4	FL1410	H5	IC705	K5	IC1201	*D4	L500	*N2	Q1100	*A2	R175	*N4	R352	*J1	R542	P2	R638	*L2
C203	*P4	C526	P2	C730	*G1	C937	*H4	C1067	*K3	C1250	C2	C1433	*G5	CL727	F3	CL1606	J5	FL1411	G5	IC707	*F2	IC1202	*E4	L700	*F2	Q1101	*A2	R176	*N4	R353	*K2	R543	N2	R639	*L2
C207	*N2	C528	*M2	C731	*G2	C938	*L3	C1068	*J3	C1251	C2	C1434	*F5	CL728	F3	CL1607	J4	FL1412	H5	IC708	K5	IC1204	*D4	L900	*J2	Q1102	*A1	R177	*N3	R354	*K2	R544	P1	R640	*L2
C208	*P3	C537	*M1	C732	*H1	C940	*L3	C1069	*L4	C1252	B2	C1435	*F5	CL729	F3	CL1608	*J4	FL1413	G5	IC709	K5	IC1212	E4	L903	*L3	Q1103	*A1	R178	*P3	R355	*K2	R545	P2	R641	*L2
C209	P3	C538	*P2	C733	*G1	C942	*H4	C1070	L3	C1254	B3	C1436	*H5	CL730	F3	CL1609	*J4	FL1414	*G5	IC710	K5	IC1214	*D3	L904	K2	Q1104	*A2	R179	*N3	R356	*K1	R546	*M2	R643	*L2
C210	*P3	C539	*P1	C734	*G2	C944	*H4	C1071	*L3	C1256	C3	C1437	*G5	CL731	F3	CL1610	*J4	FL1415	H5	IC711	K5	IC1216	E4	L905	*L5	Q1105	*A2	R180	*N3	R357	J1	R547	*N2	R644	N2
C212	*P3	C540	*P2	C735	*G2	C945	*H4	C1072	J3	C1258	*C2	C1438	*G5	CL732	F3	CL1611	*J4			IC712	*F1	IC1220	C3	L906	*M5	Q1107	*A4	R181	*N3	R358	J1	R548	M2	R645	*M2
C213	*P3	C541	*P2	C736	*E2	C947	J4	C1100	*C1	C1259	D3	C1439	*G5	CL733	F3	CL1612	*J4	IC100	*P5	IC713	*E2	IC1221	C3	L907	M2	Q1200	*E3	R182	*P5	R359	J1	R550	*M2	R646	*P1
C214	*P3	C542	*P1	C739	E2	C948	*J4	C1102	B1	C1261	*B2	C1440	*G5	CL734	F3			IC101	J2	IC714	*F3	IC1226	D3	L908	M4	Q1201	*E3	R183	*P3	R360	J1	R551	N2	R647	N1
C215	*P3	C543	*P2	C751	*F1	C950	*J4	C1103	C1	C1265	*B3	C1441	*G5	CL735	F3	CN1	B3	IC103	N5	IC715	E2	IC1230	*C4	L909	M3	Q1204	*E2	R184	*P4	R361	*J2	R552	*P2	R648	N1
C216	*P4	C544	*M1	C752	*F1	C952	*L4	C1104	*B1	C1266	*C3	C1442	G5	CL736	F3	CN25	M6	IC104	N4	IC716	*E1	IC1231	*D2	L910	M4	Q1205	*B2	R185	*N2	R362	*K2	R553	N1	R651	*M1
C217	N4	C545	*M1	C753	*E2	C955	*L4	C1105	*C1	C1267	*C2	C1443	*H5	CL737	F3	CN26	H6	IC107	P5	IC717	*F1	IC1232	*C3	L911	M3	Q1206	*C2	R186	*N2	R363	*J2	R554	*P1	R652	*L1
C219	*N4	C546	*P2	C754	*F3	C956	*L4	C1106	*B1	C1272	D4	C1444	G5	CL738	F3	CN27	C6	IC109	*N4	IC801	J5	IC1234	*D3	L912	M5	Q1207	*D3	R194	*N3	R364	*J2	R555	N2	R653	*N2

R654	*M1	R974	*J4	R1072	G1	R1227	*D4	R1334	*C2	R1461	F5	RB1506	*A4		
R655	*M1	R975	*L4	R1073	F1	R1231	*D3	R1335	*D2	R1462	G5	RB1507	*A4		
R656	*M2	R976	*L4	R1074	K4	R1232	*D3	R1336	C3	R1463	F5	RB1508	*B5		
R657	*M2	R977	*L4	R1075	K4	R1236	*E3	R1337	*D3	R1500	D5	RB1509	*B5		
R658	*M2	R979	*M5	R1076	L4	R1237	*E4	R1338	*D3	R1501	D5				
R659	*M2	R980	*M5	R1077	*M5	R1238	*D4	R1339	*D3	R1502	*D4	RV1	N3		
R700	*L5	R981	*M5	R1078	*M5	R1239	*C3	R1340	*D1	R1503	*C5	RV2	P3		
R701	*J2	R982	*M3	R1079	*K3	R1240	*D3	R1341	*C4	R1504	*C5				
R703	*G2	R983	*M4	R1080	*J3	R1242	*D4	R1342	*C3	R1505	*C5	TH100	*E3		
R706	*G1	R984	*M4	R1081	*J3	R1243	*D3	R1343	*C4	R1506	*C5				
R708	*F1	R985	*M5	R1082	*H4	R1244	*C3	R1344	*C3	R1507	*C5	TP103	P3		
R711	*K5	R986	M3	R1083	*M3	R1245	*E4	R1345	*D2	R1508	*C5	TP105	J1		
R712	*G1	R987	M3	R1084	*M3	R1246	*C3	R1346	*D2	R1509	*C5	TP300	J1		
R713	F1	R988	M4	R1085	*M3	R1247	*C3	R1347	*D4	R1510	*C5	TP503	N2		
R722	*G4	R989	M5	R1086	*M3	R1248	*D3	R1348	*D4	R1511	*C5	TP504	N1		
R727	*D4	R990	M3	R1087	*M4	R1249	*D3	R1349	*C4	R1512	*C5	TP505	N1		
R729	*F3	R991	M3	R1088	*M4	R1250	*D3	R1350	*C4	R1513	*D5	TP506	N1		
R733	*F4	R992	M3	R1089	*M5	R1252	*C3	R1351	*D4	R1514	*D5	TP800	F3		
R734	*F4	R993	M4	R1090	*M5	R1253	*D3	R1352	*C4	R1515	*D5	TP900	H1		
R735	*G4	R994	M4	R1091	*L4	R1254	*E3	R1353	*C4	R1516	*D5	TP901	H1		
R736	*G2	R995	M4	R1101	*A2	R1255	*D3	R1354	D5	R1517	*D5	TP902	H1		
R740	*L5	R996	*M3	R1102	*A2	R1256	*D3	R1355	D5	R1518	*D5	TP903	G1		
R741	*F1	R997	M3	R1103	*A2	R1257	*D3	R1356	D3	R1519	*A5	TP904	G1		
R742	*E3	R998	M4	R1104	*A2	R1258	*D3	R1381	E4	R1520	*A5	TP905	G1		
R743	*E3	R999	*M5	R1105	*A2	R1259	*C3	R1382	E3	R1521	B4	TP906	F1		
R744	F3	R1000	M3	R1106	*A2	R1260	*D3	R1383	D3	R1522	B4	TP907	F1		
R745	F3	R1001	M3	R1107	A2	R1261	*D4	R1384	D3	R1523	B4	TP908	M3		
R746	F3	R1002	M4	R1108	*A2	R1262	*D3	R1385	*C3	R1524	B4	TP909	M3		
R747	F3	R1003	M5	R1109	A1	R1263	*D3	R1386	E3	R1525	*J2	TP910	M4		
R748	F3	R1004	M3	R1110	*A1	R1264	*C3	R1387	*B2	R1526	*J2	TP911	M5		
R749	*E1	R1005	M3	R1111	*A1	R1266	*E3	R1388	*F4	R1527	*J2	TP1100	A2		
R750	*G4	R1006	M4	R1112	*A1	R1267	*D4	R1389	*F4	R1530	*C5	TP1200	E1		
R751	*G4	R1007	M4	R1113	*A1	R1269	*D4	R1390	*E4	R1531	*C5	TP1201	E1		
R752	*G4	R1008	*M3	R1114	*A1	R1270	*E3	R1391	*D4	R1532	*C5				
R753	*E2	R1009	*M3	R1115	*A1	R1271	*E4	R1392	*D4	R1533	*C5	X300	J1		
R754	*E2	R1010	*M3	R1116	*A1	R1272	*E3	R1393	*F4	R1534	*C5	X301	J1		
R755	E4	R1011	*M3	R1117	*B1	R1274	C2	R1394	*C3	R1535	*C5	X302	*J2		
R756	J5	R1012	*M4	R1118	*B1	R1275	D3	R1401	*G5	R1536	*D5	X900	*J3		
R800	*F2	R1013	*M4	R1119	*B1	R1276	D3	R1402	*G5	R1537	*D5	X901	*K3		
R801	*E1	R1014	*M4	R1120	A2	R1277	D3	R1403	*G5	R1538	A4	X1203	*C3		
R802	E1	R1015	*M5	R1121	*A2	R1278	D2	R1404	*F5	R1539	A5	X1204	D3		
R803	G1	R1016	*M2	R1122	*B1	R1279	D2	R1405	*F5	R1540	A4	X1205	D3		
R804	*G3	R1017	*M3	R1124	*A2	R1280	C2	R1406	*H5	R1541	A5	X1206	*C3		
R805	*F4	R1018	*M4	R1126	*A2	R1281	C2	R1407	*H5	R1542	*B5				
R806	E3	R1019	*M4	R1127	*B2	R1282	*D2	R1409	*G5	R1543	*B5	*:B SIDE			
R807	*H5	R1020	*M2	R1129	*B2	R1283	*D2	R1410	*G5	R1544	*D5				
R901	H3	R1021	*M3	R1130	*B1	R1284	B2	R1411	*G5	R1545	*D5				
R905	*H3	R1022	*M4	R1132	*B2	R1285	C2	R1412	*F5	R1546	*D5				
R906	*H3	R1023	*M4	R1135	*A2	R1286	C2	R1413	*F5	R1547	*D5				
R907	*H3	R1024	*M2	R1136	*A2	R1287	C2	R1414	*F5	R1548	L5				
R908	*J4	R1025	*M3	R1138	*A2	R1288	*D2	R1415	*F5	R1549	M5				
R909	*J4	R1026	*M4	R1139	*C2	R1289	C3	R1416	*H5	R1550	M5				
R910	*J4	R1027	*M4	R1140	*C2	R1290	C3	R1418	*G5	R1551	L5				
R911	*J4	R1028	*L3	R1141	*C2	R1291	*E2	R1419	*G5	R1552	M5				
R912	*J4	R1029	*M3	R1142	*C2	R1292	*E2	R1420	*G5	R1553	L5				
R913	*J4	R1030	*M3	R1143	C2	R1293	C3	R1421	*F5	R1554	*D4				
R914	*J4	R1031	*M3	R1144	C2	R1294	C3	R1422	*F5	R1555	*C5				
R915	*H4	R1032	*M3	R1145	C2	R1295	*C2	R1423	*H5	R1556	*D4				
R916	*J3	R1033	*M4	R1146	B2	R1296	*C2	R1424	*H5	R1557	*A4				
R917	*K4	R1034	*M4	R1148	*D5	R1297	*C2	R1427	*G5	R1558	*B5				
R918	*K4	R1035	*M5	R1149	E3	R1298	C3	R1428	*G5	R1590	*B5				
R919	*K4	R1036	*M4	R1150	*E3	R1299	*B2	R1429	*G5	R1591	*B5				
R921	*K4	R1037	*L4	R1151	*A2	R1300	*B2	R1430	*G5	R1592	*B5				
R924	H4	R1038	*L4	R1152	E3	R1301	*B2	R1431	*G5	R1593	*C5				
R925	H3	R1039	*L5	R1153	*C2	R1302	*C2	R1432	*G5	R1594	*D4				
R926	*H3	R1040	*L5	R1154	B3	R1303	*C2	R1433	*H5						
R927	*H3	R1041	*L5	R1155	B3	R1304	*C2	R1435	*G5	RB700	*L5				
R932	*J4	R1042	*M3	R1156	B3	R1305	*C3	R1436	*G5	RB701	*L5				
R933	*J4	R1043	*M3	R1157	C3	R1310	D4	R1437	*G5	RB702	*K4				
R934	*J4	R1044	*M4	R1161	*A4	R1311	C4	R1438	*G5	RB703	*L5				
R935	*K4	R1045	*M5	R1200	E3	R1312	D4	R1439	*G5	RB704	*L5				
R938	*K4	R1046	*M5	R1201	E3	R1313	C4	R1440	*G5	RB705	*K4				
R939	*K4	R1047	*M5	R1202	E3	R1314	*D3	R1441	*G5	RB719	*K5				
R953	*J3	R1048	*M5	R1203	E3	R1315	*D3	R1442	*G5	RB720	*E2				
R954	*J3	R1049	*M3	R1204	*E3	R1316	*D3	R1443	*G5	RB800	*J5				
R955	*H4	R1050	*M3	R1209	D4	R1317	*C2	R1444	*F5	RB801	*J5				
R956	*J3	R1051	*M4	R1210	D3	R1318	C2	R1445	*F5	RB802	*J5				
R957	*K4	R1052	*M3	R1211	D3	R1319	*C2	R1446	*G5	RB803	*J5				
R960	*J4	R1053	*M3	R1212	C4	R1320	*C2	R1447	*G5	RB804	*H5				
R961	*J4	R1054	*M4	R1213	C4	R1321	*C2	R1448	*G5	RB805	*J5				
R962	*L4	R1055	*M5	R1214	C4	R1322	*C2	R1449	*G5	RB806	*J5				
R963	*L3	R1056	*M5	R1215	C4	R1323	*C2	R1450	H5	RB807	*J5				
R964	*L4	R1057	*M5	R1216	C4	R1324	*C2	R1451	*F5	RB808	*J5				
R965	*J4	R1058	*M5	R1217	C4	R1325	*D4	R1452	*E5	RB809	*H5				
R966	*L4	R1061	M3	R1218	C4	R1326	*D4	R1453	*E5	RB1100	*D5				
R967	*L3	R1062	M3	R1219	C4	R1327	*C3	R1454	*E5	RB1101	*D5				
R968	*L4	R1063	M4	R1220	*C4	R1328	*C3	R1455	*E5	RB1500	*C5				
R969	*L4	R1064	M5	R1221	*C4	R1329	*C3	R1456	*E5	RB1501	*D4				
R970	*L3	R1065	M5	R1222	*C4	R1330	*D3	R1457	*G5	RB1502	C5				
R971	*L4	R1066	M5	R1223	C3	R1331	*D3	R1458	*G4	RB1503	D5				
R972	*J4	R1069	*K3	R1225	C3	R1332	*D2	R1459	G5	RB1504	*B4				
R973	*J4	R1070	*J3	R1226	D3	R1333	*D2	R1460	F4	RB1505	*B4				

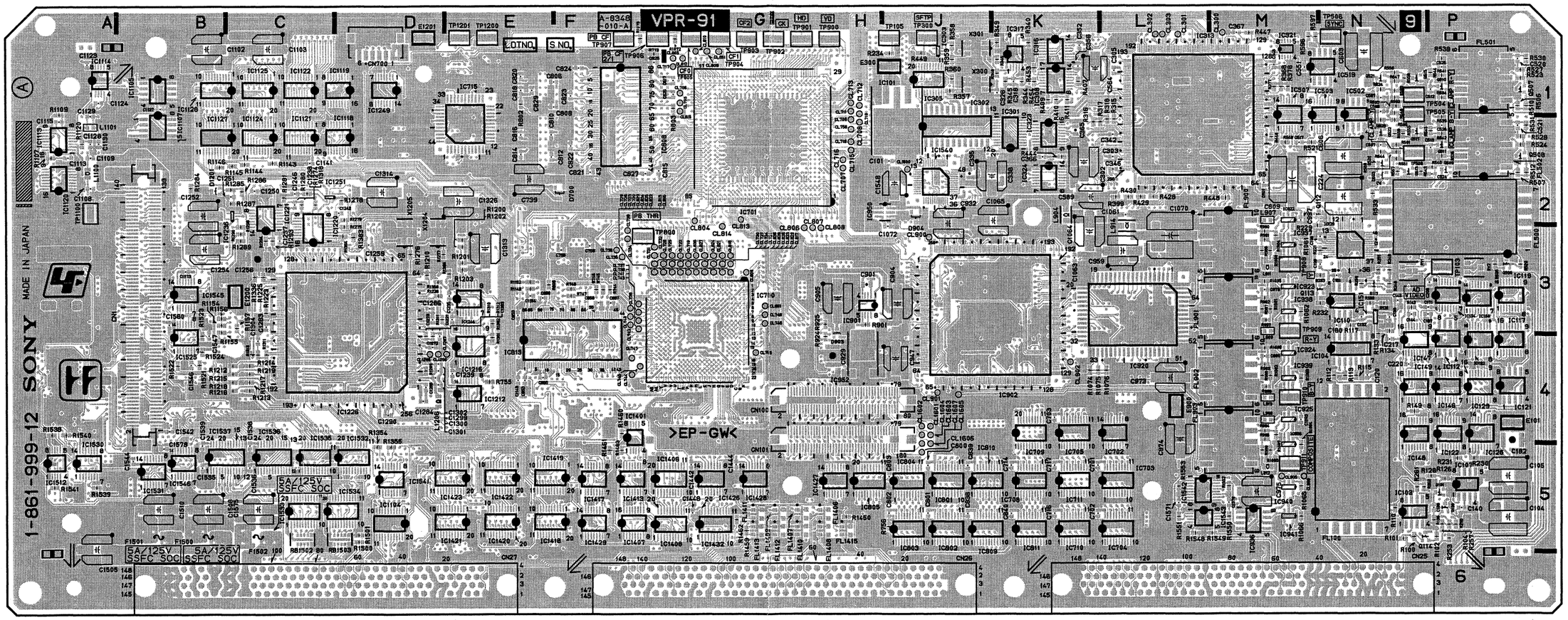

Components locations list; previous page

VPR-91 -A SIDE-
SUFFIX: -11, 12

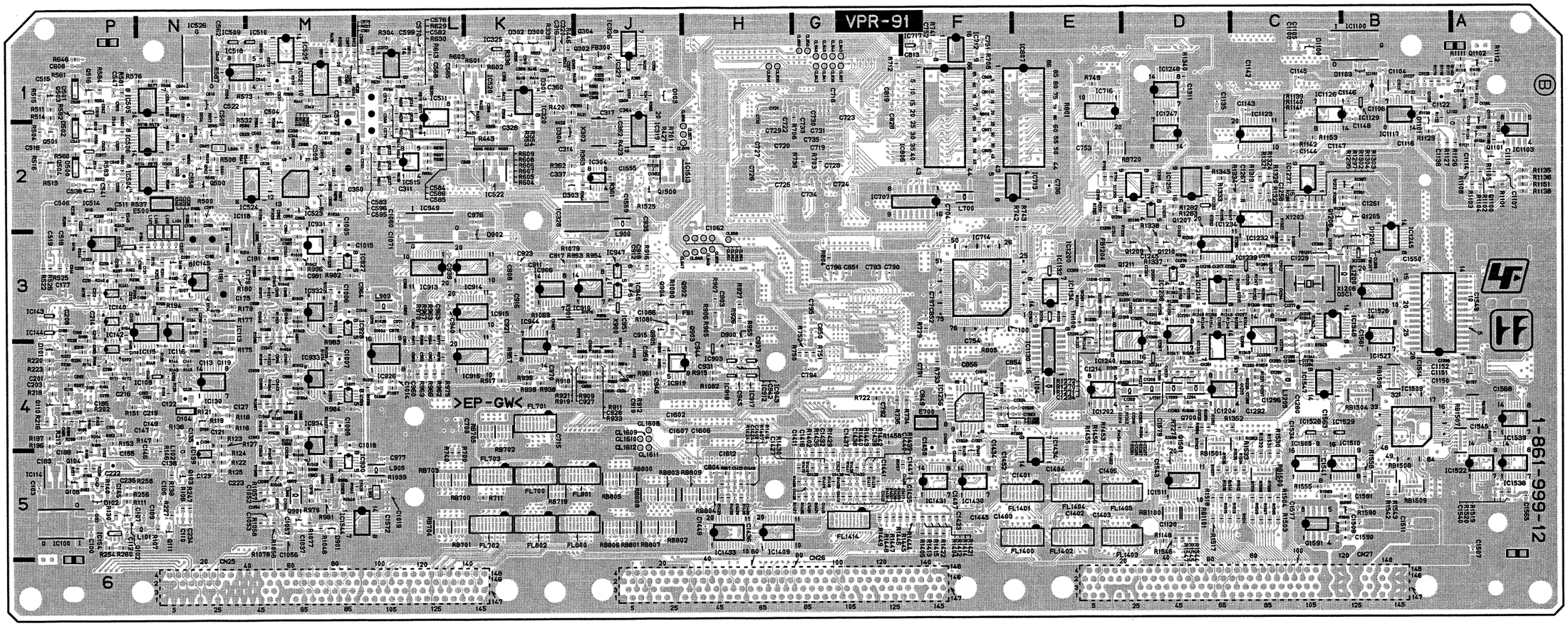

VPR-91 -B SIDE-
SUFFIX: -11, 12

HDW-2000 (J, SY)
HDW-A2100 (J)
HDW-D2000 (SY)
HDW-M2000 (J, SY)
HDW-M2000P (SY)
HDW-M2100 (J, SY)
HDW-M2100P (SY)
HDW-S2000 (J, SY)
HDW-S2000P (SY)
DVW-2000 (SY)
DVW-2000P (SY)
DVW-M2000 (SY)
DVW-M2000P (SY)
MSW-2000 (SY)
MSW-2000 (CN)
MSW-A2000 (J, SY)
MSW-A2000P (SY)
MSW-A2000P (CN)
MSW-M2000 (J, SY)
MSW-M2000P (SY)
MSW-M2000P (CN)
MSW-M2000E (J, SY)
MSW-M2000EP (SY)
MSW-M2000EP (CN)
MSW-M2100 (J, SY)
MSW-M2100P (SY)
MSW-M2100P (CN)
MSW-M2100E (J, SY)
MSW-M2100EP (SY)
MSW-M2100EP (CN) J, E
9-967-902-15
17381

Sony Corporation

Printed in Belgium
2005. 5 08
©2002